Ronin User Manual

V1.0 2014.07

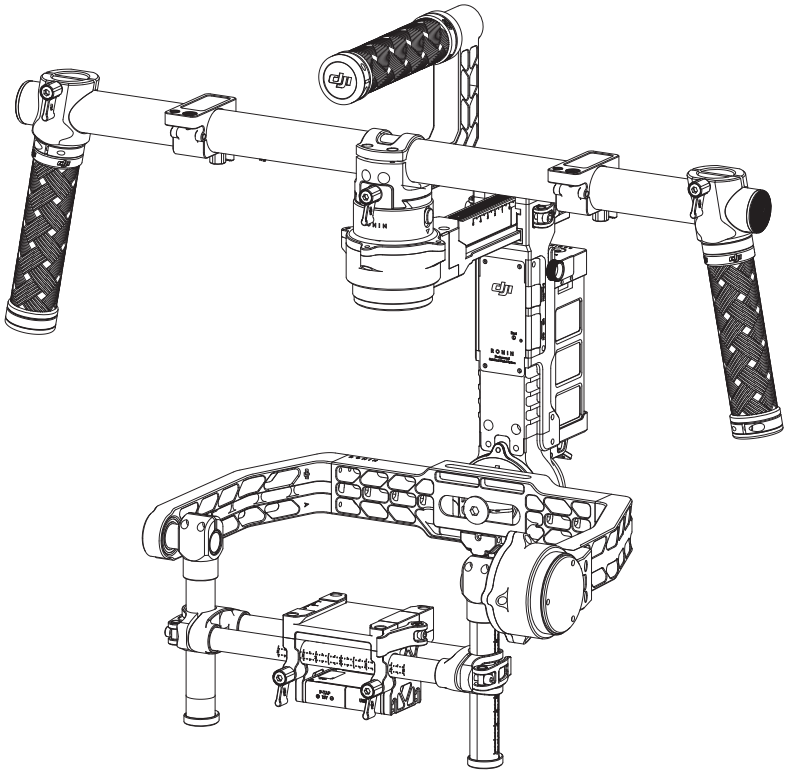

Disclaimers and Warnings

Congratulations on purchasing your new DJI product. Please read this manual and disclaimer carefully before using this product. By using this product, you hereby agree to this disclaimer and signify that you have read it in full. You agree that you are responsible for your own conduct and any content created while using this product, and for any consequence thereof. You agree to use this product only for purposes that are proper and in accordance with local regulations, terms and any applicable polices and guidelines.

By reading this disclaimer, you also agree:

1. Any part of this disclaimer is subject to change without prior notice. Refer to www.dij.com for the latest version.
2. DJI reserves the right of final interpretation of this disclaimer.

Do not modify or adjust the Ronin.
The Ronin has been calibrated before it leaves the factory. No modifcation or amending to the Ronin is allowed. Make sure to use the original battery, otherwise performance may be hindered, and internal malfunctions and damage to the gimbal may be caused. Please download the corresponding Assistant softwares.
As DJI has no control over use, setup, final assembly, modification or misuse, no liability shall be assumed nor accepted for any resulting damage or injury. By the act of use, setup or assembly, the user accepts all resulting liability. DJI assumes no liability for damage(s) or injuries incurred directly or indirectly from the use of this product.
DJI and Ronin are registered trademarks of DJI as names of product, brand, etc., appearing in this manual are trademarks or registered trademarks of their respective owner companies. This product and manual are copyrighted by DJI with all rights reserved. No part of this product or manual shall be reproduced in any form without the prior written consent or authorization of DJI. No patent liability is assumed with respect to the use of the product or information contained herein.

Using Lithium Polymer (LiPo) Batteries

LiPo smart batteries can be extremely hazardous and require special attention when handled. Always follow these instructions when using LiPo batteries:

1. DJI smart batteries must be charged with a DJI charger.
2. DJI smart batteries are designed to stop charging when full. However, it is good practice to monitor the charging progress and disconnect the battery from the charger once fully charged.
3. Do not charge a smart battery near flammable materials or on flammable surfaces such as carpet or wood.
4. Never charge a swollen, leaky or damaged battery.
5. Examine charger regularly for damage to the cord, plug, enclosure or other parts. Never use a damaged charger.
6. Disconnect the charger when not in use.
7. Do not clean the charger with denatured alcohol or other flammable solvents.

Usage and Storage

Keep batteries out of the reach of children and pets.
Never discharge batteries below 3V per cell.
Do not heat the battery.
Do not insert or remove batteries if the plastic cover has been torn or compromised in any way.
Do not drop or strike batteries.
Never use a swollen, leaky or damaged battery.

 © 2014 DJI. All Rights Reserved.

Clean battery terminals with a clean, dry cloth.
Do not expose batteries to extreme temperatures, including excessive heat. Do not leave the batteries inside vehicles on hot days.
Do not allow batteries to come into contact with any kind of liquid. Do not leave batteries out in the rain or near a source of moisture.
Do not leave batteries in a microwave oven or in a pressurized container.
Do not attempt to dismantle, pierce or cut a battery. Do not attempt to repair batteries yourself.
Do not place loose battery cells on any conductive surface, such as metal-toppled tables.
Do not put the loose cells in a pocket, bag or drawer where they may short-circuit against other items or where battery terminals could be pressed against each other.
Do not place or use batteries on strong electrostatic or electromagnetic surfaces or surrounding areas. This may result in battery damage.
Do not place heavy objects on the batteries or charger. Avoid dropping batteries.
Avoid direct contact with the electrolyte contained within the batteries. The electrolyte and electrolysis vapors are harmful to your health.
Do not mix battery brands inside the controller.
Do not attach the battery to wall or car charger sockets directly. Always use a DJI approved adapter.

Battery Disposal

Discarding batteries in general household waste is bad for the environment. Please dispose of batteries properly.
Do not dispose of batteries in fire.
Damaged or unusable batteries must be disposed of in a container specially reserved for this purpose. When disposing of batteries, follow appropriate local guidelines and regulations. For further information, contact your local solid waste authority or a battery store.
Only use the DJI smart battery.
Always use the DJI smart battery charger.

Using this manual

Legend

Important Hints and Tips References or Definitions

Download DJI Ronin Assistant App

Download and install the DJI Ronin Assistant App.
Search "DJI Assistant" on the App Store and then follow the instructions for iOS installation.

Available on the iPhone App Store
iOS6.1 or above

© 2014 DJI. All Rights Reserved.

Ronin User Manual

V1.0 2014.07

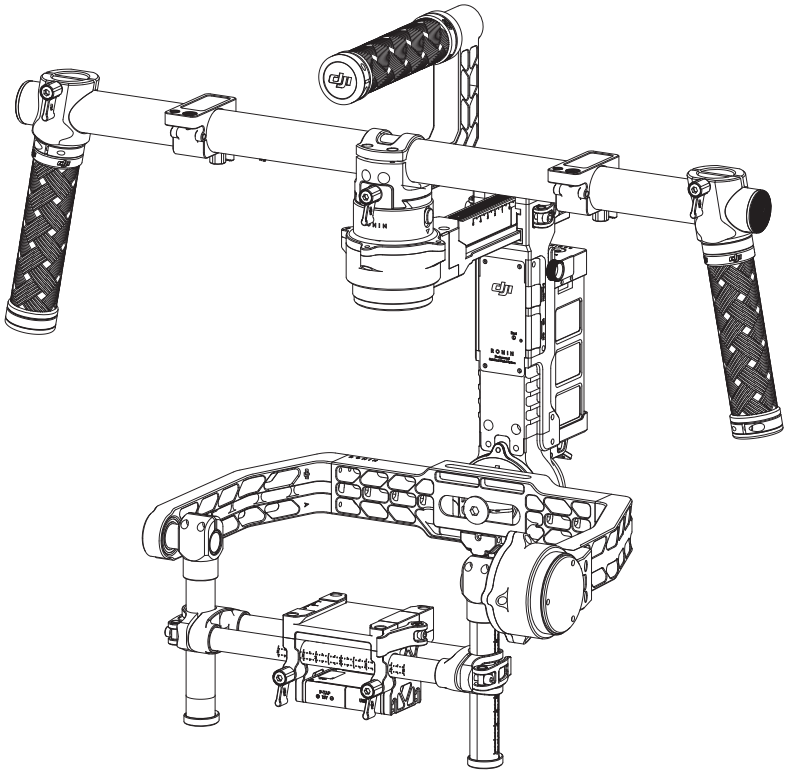

Disclaimers and Warnings

Congratulations on purchasing your new DJI product. Please read this manual and disclaimer carefully before using this product. By using this product, you hereby agree to this disclaimer and signify that you have read it in full. You agree that you are responsible for your own conduct and any content created while using this product, and for any consequence thereof. You agree to use this product only for purposes that are proper and in accordance with local regulations, terms and any applicable polices and guidelines.

By reading this disclaimer, you also agree:

1. Any part of this disclaimer is subject to change without prior notice. Refer to www.dij.com for the latest version.
2. DJI reserves the right of final interpretation of this disclaimer.

Do not modify or adjust the Ronin.
The Ronin has been calibrated before it leaves the factory. No modifcation or amending to the Ronin is allowed. Make sure to use the original battery, otherwise performance may be hindered, and internal malfunctions and damage to the gimbal may be caused. Please download the corresponding Assistant softwares.
As DJI has no control over use, setup, final assembly, modification or misuse, no liability shall be assumed nor accepted for any resulting damage or injury. By the act of use, setup or assembly, the user accepts all resulting liability. DJI assumes no liability for damage(s) or injuries incurred directly or indirectly from the use of this product.
DJI and Ronin are registered trademarks of DJI as names of product, brand, etc., appearing in this manual are trademarks or registered trademarks of their respective owner companies. This product and manual are copyrighted by DJI with all rights reserved. No part of this product or manual shall be reproduced in any form without the prior written consent or authorization of DJI. No patent liability is assumed with respect to the use of the product or information contained herein.

Using Lithium Polymer (LiPo) Batteries

LiPo smart batteries can be extremely hazardous and require special attention when handled. Always follow these instructions when using LiPo batteries:

1. DJI smart batteries must be charged with a DJI charger.
2. DJI smart batteries are designed to stop charging when full. However, it is good practice to monitor the charging progress and disconnect the battery from the charger once fully charged.
3. Do not charge a smart battery near flammable materials or on flammable surfaces such as carpet or wood.
4. Never charge a swollen, leaky or damaged battery.
5. Examine charger regularly for damage to the cord, plug, enclosure or other parts. Never use a damaged charger.
6. Disconnect the charger when not in use.
7. Do not clean the charger with denatured alcohol or other flammable solvents.

Usage and Storage

Keep batteries out of the reach of children and pets.
Never discharge batteries below 3V per cell.
Do not heat the battery.
Do not insert or remove batteries if the plastic cover has been torn or compromised in any way.
Do not drop or strike batteries.
Never use a swollen, leaky or damaged battery.

 © 2014 DJI. All Rights Reserved.

Clean battery terminals with a clean, dry cloth.
Do not expose batteries to extreme temperatures, including excessive heat. Do not leave the batteries inside vehicles on hot days.
Do not allow batteries to come into contact with any kind of liquid. Do not leave batteries out in the rain or near a source of moisture.
Do not leave batteries in a microwave oven or in a pressurized container.
Do not attempt to dismantle, pierce or cut a battery. Do not attempt to repair batteries yourself.
Do not place loose battery cells on any conductive surface, such as metal-toppled tables.
Do not put the loose cells in a pocket, bag or drawer where they may short-circuit against other items or where battery terminals could be pressed against each other.
Do not place or use batteries on strong electrostatic or electromagnetic surfaces or surrounding areas. This may result in battery damage.
Do not place heavy objects on the batteries or charger. Avoid dropping batteries.
Avoid direct contact with the electrolyte contained within the batteries. The electrolyte and electrolysis vapors are harmful to your health.
Do not mix battery brands inside the controller.
Do not attach the battery to wall or car charger sockets directly. Always use a DJI approved adapter.

Battery Disposal

Discarding batteries in general household waste is bad for the environment. Please dispose of batteries properly.
Do not dispose of batteries in fire.
Damaged or unusable batteries must be disposed of in a container specially reserved for this purpose. When disposing of batteries, follow appropriate local guidelines and regulations. For further information, contact your local solid waste authority or a battery store.
Only use the DJI smart battery.
Always use the DJI smart battery charger.

Using this manual

Legend

Important Hints and Tips References or Definitions

Download DJI Ronin Assistant App

Download and install the DJI Ronin Assistant App.
Search "DJI Assistant" on the App Store and then follow the instructions for iOS installation.

Available on the iPhone App Store
iOS6.1 or above

© 2014 DJI. All Rights Reserved.

Contents

Disclaimers and Warnings 2
- Using Lithium Polymer (LiPo) Batteries 2
- Usage and Storage 2
- Battery Disposal 3

Using this manual 3
- Legend 3
- Download DJI Ronin Assistant App 3

Introduction 5
Package & Instruction Sheet 5
In the box 6
Gimbal Description 8
Getting Started 8
- Smart Battery 8
- Tuning Stand 10
- Installing the Handle Bar onto the Gimbal 11
- Smart Battery Installation 12
- Mounting the Camera 12
- Handle Bar Adjustment 14

Balancing 14
- Step1: Balancing the Tilt Axis 15
- Step2: Balancing the Roll Axis 15
- Step3: Balancing the Vertical Tilt 15
- Step4: Balancing the Pan Axis 16
- Advanced Roll Adjustment 16

DJI Ronin Assistant App Tuning 17
- Download and Install 17
- Basic Settings 17
- Advanced Settings 18

DJI PC Assistant Tuning 23
- Install the DJI WIN driver and DJI PC Assistant 23
- Settings 23

Remote Control 28
- Connecting the Remote Control to Ronin 28
- Remote Control Power LED Indicator Status 29
- Remote Control Features 29
- Adding 3rd Party Transmitter/Receiver 30

Operation Modes 30
- Underslung Mode 30
- Upright Mode 31
- Briefcase Mode 31

Maintenance 31
Troubleshooting 32
Specification 33

 © 2014 DJI. All Rights Reserved.

Introduction

The DJI Ronin is the culmination of years of stabilization experience built into our most advanced camera stabilization platform to date. The technology built into the DJI Ronin allows a broad spectrum of cameras varying in size and weight to be mounted for class leading stabilization. We've put years of passion and excitement into the Ronin, bringing world-class movement translation and stability to the professional cinematographer's market.

A brushless gimbal stabilization system is not simply three brushless motors moving on three axes. The motors work with position feedback and the IMU (Inertial Measurement Unit) to communicate with our custom 32-bit processor, which processes movement calculations in milliseconds. This equates to control and stability accuracy down to 0.02 degrees of translated movement, meaning your images are going to be perfectly still in all three axes of movement. There are three operation modes in the Ronin: underslung mode, upright mode and briefcase mode.

Package & Instruction Sheet

Air pressure may be built up during air transportation or during extreme barometric pressure changes. Loosen the pressure valve knob on the side of the case prior to transportation in these circumstances to prevent pressure build up.

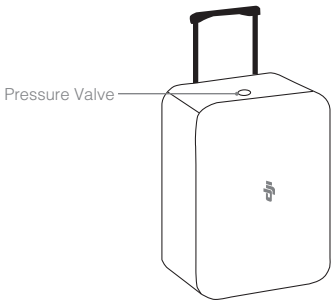

Below is the layout of the items inside the case. Not every item in this sheet is provided by DJI. There are pre-cut slots for some additional accessories. For more information regarding what's included, please refer to the "In the box" section of this manual.

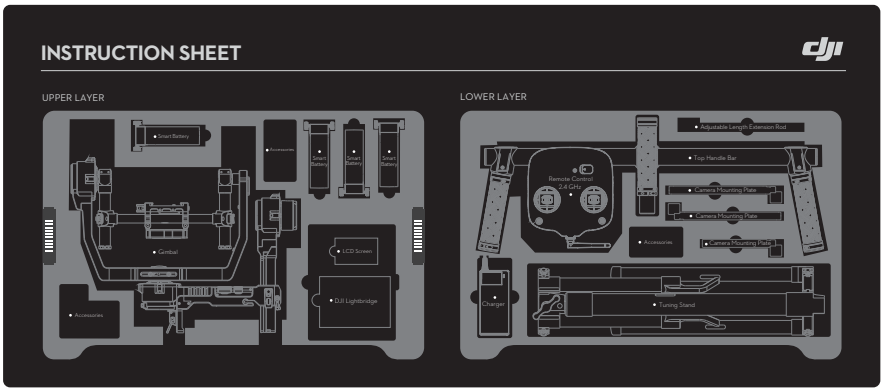

© 2014 DJI. All Rights Reserved.

In the box

Gimbal × 1

The gimbal includes built-in DJI motor drive modules, an independent IMU module, a 32-bit DSP processor, power supply module, Bluetooth, transmitter/receiver module, camera shelf, and power breakout box.

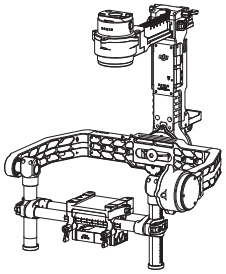

Handle Bar × 1

Customizable handle platform for the gimbal.

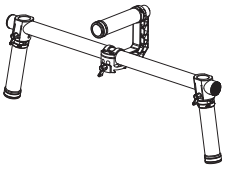

Remote Control- 2.4 GHz × 1

Controls the movements of the gimbal, switches the work modes, and selects gimbal speed.

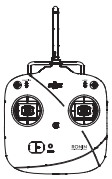

Tuning Stand × 1

For suspending or storing the gimbal.

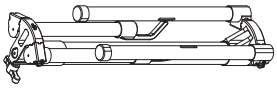

Charger × 1

110-240V automatic switching charger.

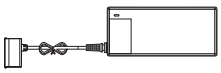

Smart Battery × 1

Power source for the gimbal. Also supplies power for other external devices.

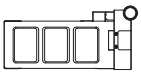

 © 2014 DJI. All Rights Reserved.

Cables × 3

ANSI & JIS & CE cables.

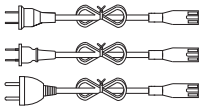

Plug Adaptors × 2

SAA & BS adaptors.

Micro-USB Cable × 1

For firmware upgrades.

Camera Mounting Plate × 1

For mounting your camera onto the gimbal.

Extension Rod Holder × 1

For installing extension accessories with the extension rods.

Adjustable Length Extension Rod × 6

For installing extension accessories with the extension rod holder.

Accessories Package

Camera Screw A (1/4") ×2

Camera Screw B (3/8") ×2

M4*10 Screw ×2

Lens Support Screw ×1

Lens Support ×1

Top Bar Quick Release Accessories Mount x 2

Allen Wrench ×3 (3mm, 4mm, & 3/16")

© 2014 DJI. All Rights Reserved.

Gimbal Description

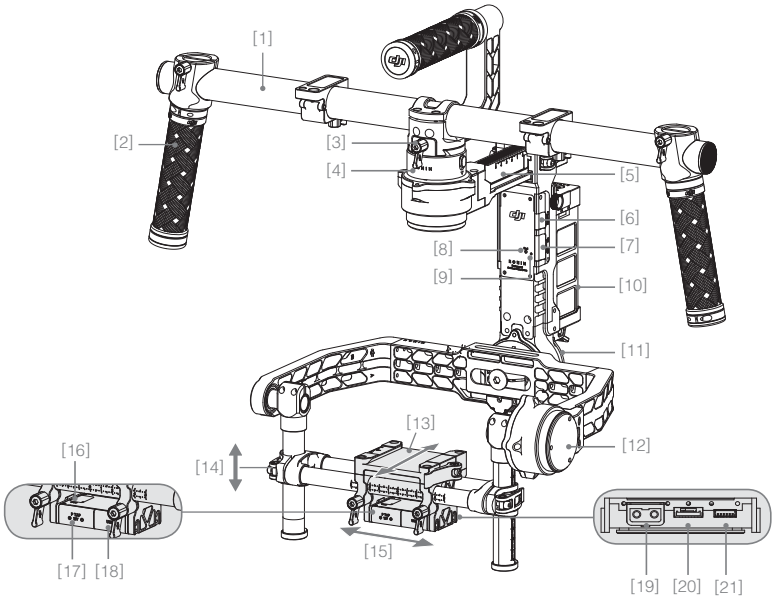

[1] Top Handle Bar
[2] Side Handle
[3] Quick Release Mount
[4] Pan Motor
[5] Pan Adjustment Slider
[6] D-BUS/PPM Receiver Port
[7] USB port & Can Bus Port
[8] Bind Button
[9] Gimbal LED Indicator light
[10] Smart Battery
[11] Roll Motor
[12] Tilt Motor
[13] Fore and Aft Adjustment
[14] Tilt Vertical Adjustment
[15] Roll Adjustment
[16] IMU
[17] P-TAP Accessory Power Port
[18] USB Accessory Power Port
[19] P-TAP Port (rear side)
[20] DJI Lightbridge Port (rear side)
[21] GCU (rear side)

Getting Started

Smart Battery

Before you start using your Ronin, be sure to charge the battery first. The smart battery is specially designed for the Ronin. It has a battery capacity of 3400mAh, voltage of 14.8V, and power management functionality. Charge the smart battery only with DJI approved chargers. When the battery is fully charged, it has a maximum run time of 4 hours.

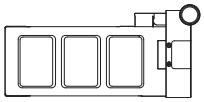
Smart Battery

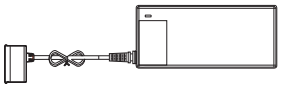
Charger

 © 2014 DJI. All Rights Reserved.

DJI Smart Battery Functions	
Balance Charging	Automatically balances the voltage of each battery cell during charging.
Capacity Display	Displays current battery levels.
Overcharge Protection	Charging stops automatically when the battery voltage reaches 16.8V to prevent overcharge damage.
Over Discharge Protection	Discharging stops automatically when battery voltage reaches 12V to prevent over discharge damage.
Short Circuit Protection	Automatically cuts power supply when a short circuit is detected.
Sleep Protection	Sleep mode is activated after 10 minutes of inactivity to save power.
Charging Temperature Detection	The battery will charge only when the temperature is between 0°C and 55°C.

Battery Specifications	
Type	LiPo
Capacity	14.8V, 3400mAh
Charging Environment Temperature	0°C ~ 45°C
Operating Environment Temperature	-15°C ~ 50°C
Charging/Discharging Environment Relative Humidity	<80%

⚠
- Read the user manual, disclaimer, and battery warnings before use. Users take full responsibility for all operations and usage.
- Always use DJI approved chargers. DJI takes no responsibility for any use of non-DJI approved chargers.

Charging the Smart Battery

1. Connect the charger to a wall socket (100-240V, 50/60Hz), using the plug set if necessary.
2. Connect the battery to the charger.
3. The battery level indicator lights display current capacity level as the battery charges.
4. The battery is fully charged when the battery level indicator lights shut off and the indicator light on the charger turns green. Disconnect the battery from the charger when charging is completed.

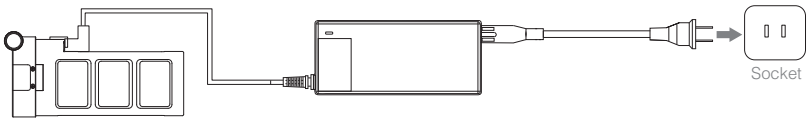

© 2014 DJI. All Rights Reserved.

Using the Smart Battery

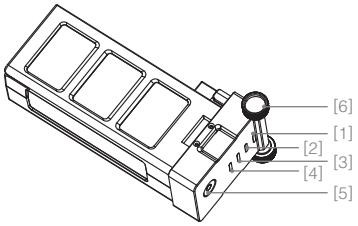

[1] [2] [3] [4] LED indicator lights
[5] Power Button
(with one LED battery power indicator.)
[6] Thumb Screws

Checking the battery level: When the battery is powered off, pressing the battery power button once will display the current battery level.
Powering on: When the battery is powered off, press and hold for 1 second to turn on the smart battery.
Powering off: When the battery is powered on, press and hold for 1 second to turn off the smart battery.

Description of the Smart Battery Level Indicators

The battery level indicators show the current battery level during both the charging and discharging process. The following is a description of the indicators.

▮: The LED is in a solid state on ▯:The LED is blinking ▯: The LED is off

Discharging process				
LED1	LED2	LED3	LED4	Current battery level
▮	▮	▮	▮	87.5%~100%
▮	▮	▮	▯	75%~87.5%
▮	▮	▮	▮	62.5%~75%
▮	▮	▯	▮	50%~62.5%
▮	▮	▮	▮	37.5%~50%
▮	▯	▮	▮	25%~37.5%
▮	▮	▮	▮	12.5%~25%
▯	▮	▮	▮	0%~12.5%
▮	▮	▮	▮	<0%

Tuning Stand

You can use the tuning stand during setup or for storage of the gimbal. The following steps show how to use the tuning stand.

1. Put the stand in the upright position as shown in the picture below.
2. Put your thumb on the silver button [1]. Using your index and middle finger behind the arm, pull the lower legs outward away from the stand, and then pull downward. Then pull the upper arms outward and upward.
3. The upper half of this tuning stand can be removed by loosening the knob [3]. You can use it with any C-stand style stud that fits the hole [4]. When mounting on to a C-stand, be sure to check the balance of the stand so as to not have the Ronin with a camera tilt over. When setting on a table, make sure the table is a flat and even surface.

 © 2014 DJI. All Rights Reserved.

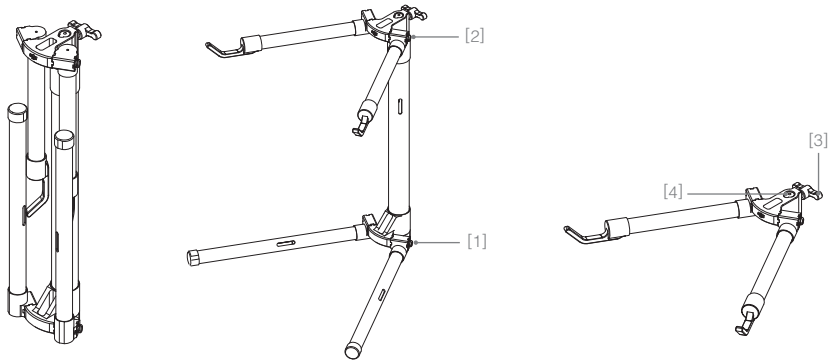

Installing the Handle Bar onto the Gimbal

1. The turn knobs on the handles are loose by default. Adjust the grips to the desired position and tighten the screws to secure their position.
2. Place the handle bar in the position as shown below.

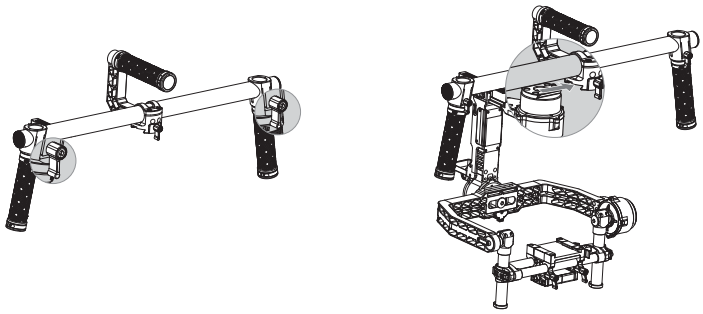

3. Push the lock [1]downward on the pan motor, and slide the handle bar into the gimbal. Then tighten the lock-knob [2].
4. With your hands on the handles, be sure the gimbal is not obstructed during a 360 degree pan. Installation is complete.

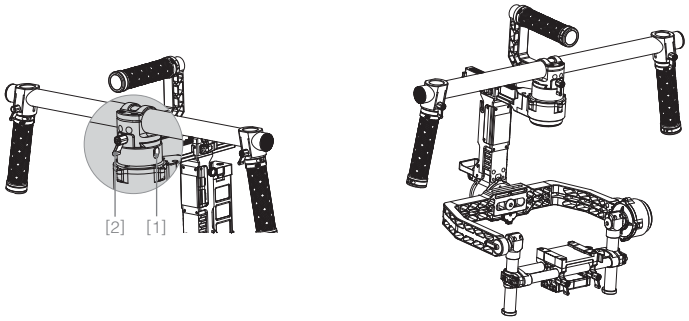

© 2014 DJI. All Rights Reserved.

Smart Battery Installation

1. Loosen the thumb screws on either side of the battery. Slide the battery directly into the gimbal and then slide down. Be sure the battery's thumb screws go down into their locating slots making full contact with the gimbal's electrical leads.
2. Tighten the thumb screws on the battery to lock it in place.

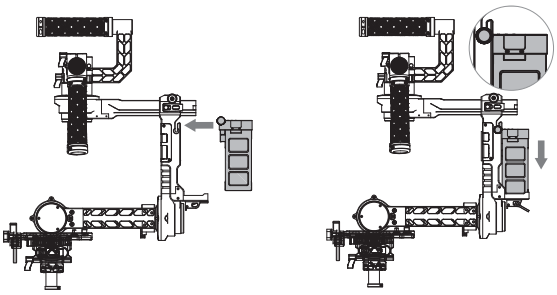

⚠
- Make sure the battery is powered off during the installation.
- An incorrectly installed battery may lead to (1) Poor battery connection, or (2) Unavailable battery information.

Mounting the Camera

The Ronin uses an adjustable camera mounting plate to allow you to easily balance, install and remove your camera. The Ronin has been tested with the following types of cameras. Other cameras similar in size and weight may also work.

Black Magic Cinema Camera	Canon 6D	Nikon D800
Black Magic Pocket Cinema Camera	Canon 7D	Panasonic GH3
Canon 1Dc	Canon C100	Panasonic GH4
Canon 5DMKII	Canon C300	RED Epic/Scarlet
Canon 5DMKIII	Canon C500	Sony NEX7

⚠
- Camera Size Requirements: the maximum depth from the center of gravity on the camera base plate is 140mm; the maximum height measured from the top of the camera base plate is 225mm; and the maximum width is 195mm.
- To avoid obstructing camera movement, the use of soft connection cables is recommended.

1. Attach the camera mounting plate to your camera using the provided screws. Choose the correct 1/4" or 3/8" screws. Some cameras have two tripod mounting holes. It's best to secure the camera as tightly as possible. If two mounting holes are available on your camera, then use both mounting holes. Choose the right screw holes according to your camera's configuration.
2. Install the extension rod holder and lens support. Gently push up to apply a little pressure to the lens, then tighten the thumbscrew.

 © 2014 DJI. All Rights Reserved.

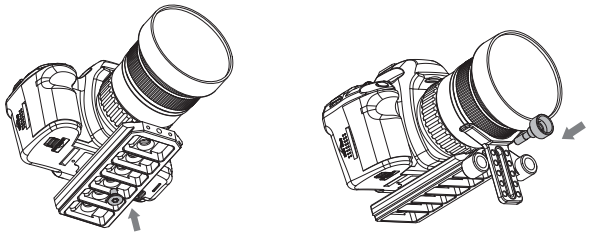

Why do you need to use a lens support?
Certain cameras have a very tight lens securing system, and some cameras like the Canon 5D MKII and MKIII have very loose lens securing systems. The Ronin balances the camera as one solid unit. If the mounted camera has a loose camera securing system, the lens support must be used. This is because if a loose connection between the lens and the camera body is apparent, vibrations could travel through to the camera but not directly to the lens, resulting in the two masses shaking at different frequencies. The resulting oscillation will translate to the IMU, causing the whole gimbal to shake. If the lens support fits, it's best to use it at all times.

- The lens support can be installed either facing outward or inward to accommodate different lens types.
- Ensure alignment of the camera plate and then tighten the screw prior to tightening the lens support.

3. If using follow focus or other accessories, insert the extension rod into the extension rod holder and tighten. Configure the length of the rods needs to accomodate for the length of the lens used.

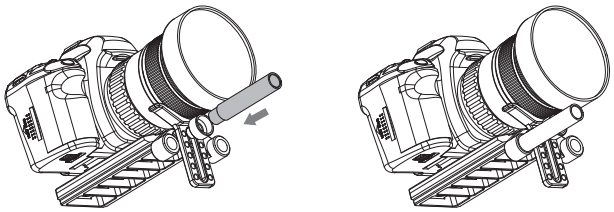

4. With the gimbal on the tuning stand facing outward, insert the camera until the safety lock is engaged. Make sure the gimbal is not turned on when balancing the camera.
5. Tighten the camera base side clamp. You can adjust the tightness of the side clamp with the M3 allen wrench.

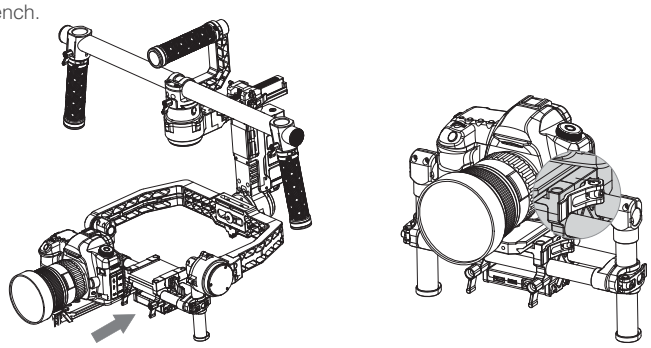

© 2014 DJI. All Rights Reserved.