DJI Ronin Assistant App Tuning

After finishing the balancing portion, you can adjust software parameters through the DJI Assistant App.

Download and Install

1. Download the DJI Assistant App:
   Search “DJI Assistant” on the App Store then follow instructions for the iOS version.
2. Be sure Bluetooth is switched to the on postion on your mobile device. Position the camera in the standard operating position. Power on your Ronin and then open the app to connect to the Ronin via Bluetooth.
3. Register your e-mail address when using the app for the very first time.
4. Connect to your Ronin according to the tips in the app. After connecting to the main controller of the gimbal, you will see the Wizard menu. When the green light at the top in the App is steady and the blue light is blinking, the connection is complete. The green LED light on the Ronin will light up.

⚠ There are two device types, choose "Ronin" to enter the gimbal assistant page. Choosing "A2" will enter the DJI flight controller assistant page.

Basic Settings

The functionality in the Wizard are the most basic functions you may want to adjust upon receiving your Ronin. These options are also the most used functions during standard operation of the Ronin. You can complete all these settings in the Wizard menu.

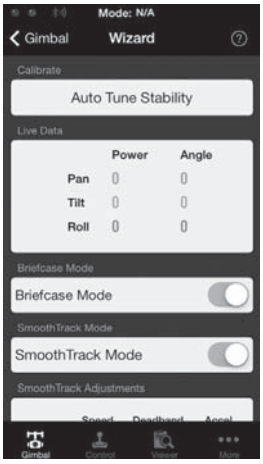

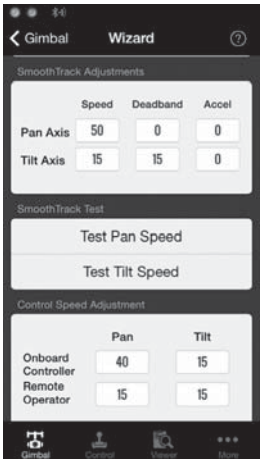

1. Calibrate

Auto Tune Stability provides an easy one-touch button for automatic configuration of each axis. Trajectory, speed, power and stiffness of motors are automatically tuned for the camera configuration that’s mounted. Auto Tune Stability should be tapped whenever there is a new camera configuration mounted such as a lens change or accessories change. This will offer the best stability and the most optimal settings.

© 2014 DJI. All Rights Reserved.

2. Live Data

This monitors the feedback from each motor axis. If a particular motor axis indicates a power greater than 10, this often means the mechanical balancing of the camera hasn't been properly adjusted. A properly balanced camera rig will have each axis indicating close to 0 power. Don't worry if these settings are not always 0. The Angle indicates the current angle at which each axis is in relation to center.

3. Briefcase Mode

When Briefcase Mode is switched on, the Ronin will be able to seamlessly transform into this operation mode. With Briefcase Mode turned off, the Ronin will allow the Roll axis to follow if the Ronin is tilted past the standard roll axis travel.

4. SmoothTrack Mode

When SmoothTrack Mode is enabled, the Ronin will can be "steered" by the camera operator's movements in the Pan and Tilt axis. This steering/translation speed can be adjusted for each axis independently. When the Ronin's top bar is rotated left or right, the camera will smoothly pan and slow down to a stop. Under the SmoothTrack options, the Pan Axis and the Tilt Axis can be independently adjusted.

Pan Axis speed will determine how fast the camera will travel while translating a pan movement. Pan Deadband will determine how much movement the gimbal will tolerate prior to translating the camera's pan. Tilt Axis speed will determine how fast the camera will travel while translating a tilt movement. Tilt deadband will determine how much movement the gimbal will tolerate prior to translating the camera's tilt.

The Pan and Tilt SmoothTrack speed can be tested. Ensure there is no obstruction of the camera when tapping these Test buttons.

5. Control Speed Adjustment

Remote control speed can be adjusted here. The adjustment represents the maximum speed of gimbal control in the Pan and Tilt axis when the control sticks are pushed to their endpoints.

Advanced Settings

There are more advanced functions you can adjust through the Assistant to meet your requirement.

Gimbal Menu

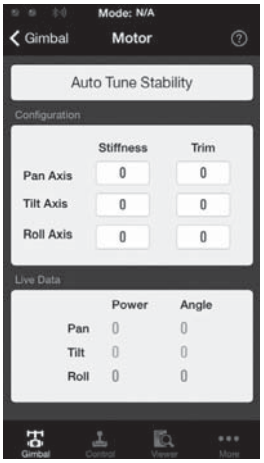

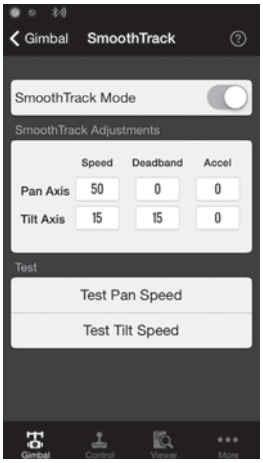

 © 2014 DJI. All Rights Reserved.

1. Gimbal Motor Adjustment

The Auto Tune Stability button allows for automatic adjustment of each motor's stiffness settings (as relayed from the sensors and how the Ronin sees each axis's interaction) to accomplish an optimized setting. Besides tuning stiffness, there are other electronic settings being tuned. It is highly recommended that the Auto Tune Stability button be tapped whenever there is a new camera configuration mounted, including a lens change or accessories change. This will offer the best stability and the most optimal settings.

Each axis has its own stiffness and trim adjustment. The motor stiffness adjustment allows fine tuning of the amount of power applied to the motors as they react to the balancing of weight on each axis. The higher you can adjust the stiffness settings without having any vibrations or oscillations from the gimbal, the better. A majority of the time, the Auto Tuned settings will be suitable. The Trim adjustment controls the preset amount of trim applied to each axis off center. The default setting of 0 degrees represents center.

2. Gimbal SmoothTrack Mode

When SmoothTrack Mode is enabled, the Ronin will can be "steered" by the camera operator's movements in the Pan and Tilt axis. This steering/translation speed can be adjusted for each axis independently. When the Ronin's top bar is rotated left or right, the camera will smoothly pan and slow down to a stop. Under the SmoothTrack options, the Pan Axis and the Tilt Axis can be independently adjusted.

Pan Axis speed will determine how fast the camera will travel while translating a pan movement. Pan Deadband will determine how much movement the gimbal will tolerate prior to translating the camera's pan. Tilt Axis speed will determine how fast the camera will travel while translating a tilt movement. Tilt deadband will determine how much movement the gimbal will tolerate prior to translating the camera's tilt.
The Pan and Tilt SmoothTrack speed can be tested. Ensure there is no obstruction of the camera when tapping these Test buttons.

Control Menu

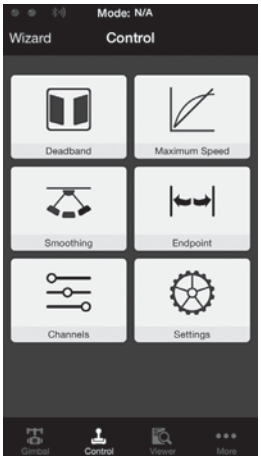

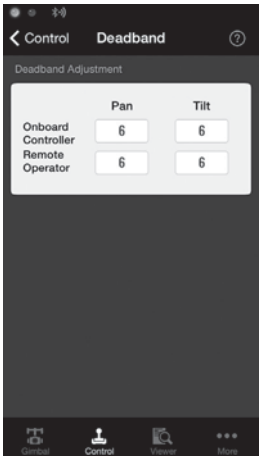

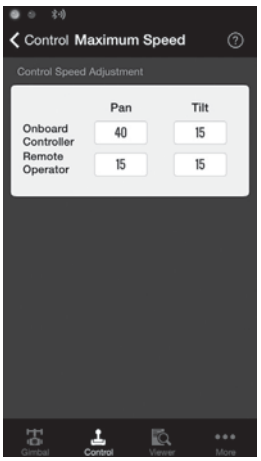

© 2014 DJI. All Rights Reserved.

1. Controller Deadband

Onboard controller and the remote operator controller can have independent pan and tilt deadbands of movement. The larger the deadband, the more deadband there is in the stick movement prior to the input being translated to actual movement of the gimbal.

2. Controller Maximum Speed

Maximum Speed is a function that allows the controlled stick response from being a linear response to what is known as an increasing response curve. This means the amount of gimbal travel in the Pan or Tilt is not directly proportional to control stick travel. Control response can be adjusted to be milder below the initial first half of control stick travel and be increased to a higher speed towards the last half of control stick travel. This preset exponential curve is selected based off the input of maximum speed. The onboard controller and the remote operator control sticks can have maximum speeds set independently from each other.

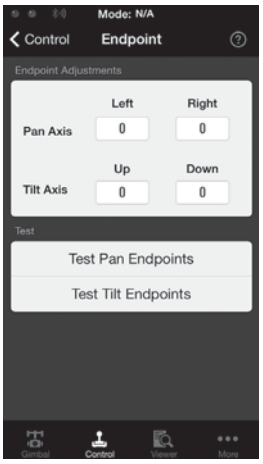

3. Controller Smoothing

When the control stick input is released, the smoothing of the translated movement will come to a smooth slow down if the smoothing is increased. If the smoothing is 0, the slowdown will appear as an abrupt stop. The onboard controller and remote operator control sticks can be set independently. Pan and tilt smoothing can also be set independently.

4. Controller Endpoints Adjustment

Pan Axis endpoints can be adjusted independently for left and right movement when used with a remote control or the onboard controller. Pan Axis endpoints setting means during controller input, the maximum point in which the gimbal will rotate left or right.

If the requirement to rotate 360 degrees on the Pan axis is needed, simply adjust the endpoints for pan to 0. If endpoints are set to 0 for 360 degree Pan ability, then "Test Pan Endpoint" will not move the pan axis.

Tilt Axis endpoints can be adjusted independently for up and down movement when used with a remote control or the onboard controller. Tilt Axis endpoints setting means during controller input, the maximum point in which the gimbal will rotate up or down.

The Pan and Tilt endpoints can be tested. Ensure there is no obstruction of the camera when tapping the Test buttons.

 © 2014 DJI. All Rights Reserved.

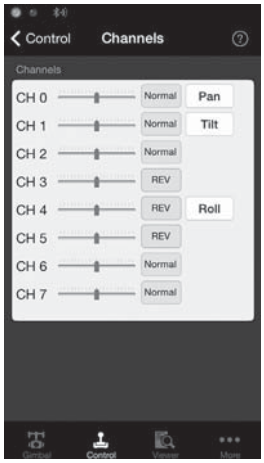

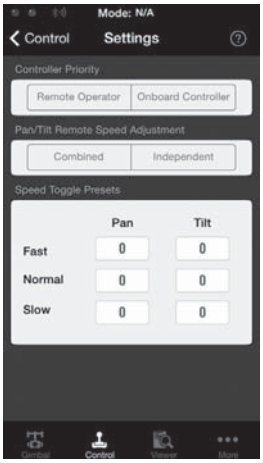

5. Channels

This is a channel indicator to provide feedback during remote operator configuration. Pan, Tilt, and Roll can be re-assigned to either of the remote control sticks. The controlled axis can also be reversed.

6. Controller Settings

Controller Priority: If both input devices send control signals to the gimbal, the selected controller priority will be the only device to send a signal at that given time.

Pan/Tilt remote speed adjustments can be pre-configured to be selectable on the 2nd operator remote control. The control speed settings for pan and tilt can be set independently from each other.

Setting Speed Toggle Presets, you are setting the Function switch (left switch) on the Ronin remote control. These presets will allow you to change the SmoothTrack speed remotely. If the remote control is turned on, the Speed Toggle Presets for SmoothTrack will take precedence over the App settings. Once the remote control is turned off, the SmoothTrack settings in the App will take over.

© 2014 DJI. All Rights Reserved.

Viewer Menu

The viewer provides all the essential live data for monitoring the gimbals electronics as well as feedback from the motors. Power is indicated for each axis. The current angle of each axis is also indicated. The voltage of the battery, temperature of the main electronics, and also current uptime can also be monitored via this menu.

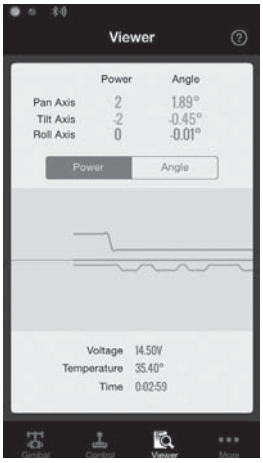

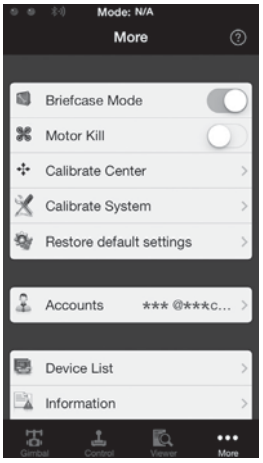

More Menu

Briefcase Mode

When Briefcase Mode is switched on, the Ronin will be able to seamlessly transform into this operational mode. With Briefcase Mode turned off, the Ronin will continue to allow the Roll axis to follow.

Motor Kill Switch

When activated, the Ronin is still powered on, but the motors will be powered off. This will allow an adjustment to the gimbal or camera without having to turn off the gimbal. Prior to turning off the kill switch, make sure the gimbal is positioned in the standard operating position. The motor kill switch can also be used in case the gimbal operator runs into an issue, or you need to make a quick mechanical adjustment to the gimbal or camera setup.

Calibrate Center

If the Ronin's Pan axis is off center, you can recalibrate the true center of the Ronin using this switch. Using a remote control, position the pan axis at dead center, then tap the Calibrate Center. Tap "Center" again in the pop-up to confirm. Power cycle after calibrating center.

Calibrate System

Calibrate System is only used if you notice any kind of drift in any of the axes. To calibrate the system, place the Ronin on the tuning stand and make sure it is completely steady. Then tap the Calibrate System button and let the process finish before picking up the Ronin.

Restore Default Settings

This will restore all the factory settings that are configurable through the app.

 © 2014 DJI. All Rights Reserved.

DJI PC Assistant Tuning

You can also tune the Ronin and upgrade firmware through the DJI PC Assistant.

The tuning abilities of the DJI Assistant App and DJI PC Assistant are the same. There is no need to repeat your settings in both Assistants.

Install the DJI WIN driver and DJI PC Assistant

1. Download the DJI WIN DRIVER INSTALLER from the Ronin product page on DJI.com.
2. Download the appropriate Assistant installer from DJI.com.
3. Double click the Assistant installer and follow the steps to finish the installation.
4. Run Assistant.
5. Upgrade the firmware or configure parameters using the Assistant as needed.

The Assistant installer can be used on Windows XP, Win7, and Win8 (32 or 64 bit)

Settings

Adjust the following basic functions before using the Ronin: Auto Tune Stability, Briefcase Mode, SmoothTrack and Maximum Speed Adjustment.

The definition and function of every button in the DJI Assistant App and DJI PC Assistant are the same, refer to the DJI Assistant App for more details.

Basic

1. Gimbal

© 2014 DJI. All Rights Reserved.

Motor: The Auto Tune Stability button allows for automatic adjustment of each motor's stiffness settings (as relayed from the sensors and how the Ronin sees each axis's interaction) to accomplish an optimized setting. Each axis has its own stiffness and trim adjustment.
Live Data: This monitors the feedback from the motors on each axis.
Briefcase Mode: Select the checkbox to enable Briefcase Mode.
Motor Kill Switch: Select the checkbox to enable the Motor Kill Switch.
SmoothTrack: Select the checkbox to enable SmoothTrack. Note the Pan Axis and the Tilt Axis can be independently adjusted.
The Pan and Tilt SmoothTrack speed can be tested. Ensure there is no obstruction of the camera when clicking the Test buttons.

Reset Password: If you forgot your Bluetooth connection password, click here to reset your password.
Calibrate Center: If the Ronin's Pan axis is off center, you can recalibrate the true center of the Ronin using this switch. Using a remote control, position the pan axis at dead center, then click the Calibrate Center. Click "Center" again in the pop-up to confirm. Once calibrated, power cycle for the new center to take effect.

Viewer Menu: The Viewer provides essential live data for monitoring the Ronin's electronics and feedback from the motors. Power is indicated for each axis. The current angle of each axis is also indicated.

Calibrate System: Calibrate System is only used if you notice any kind of drift in any of the axes. To calibrate the system, place the Ronin on the tuning stand and make sure it is completely steady. Then click the Calibrate System button and let the process finish before picking up the Ronin.

Auto Tune Stability: The Auto Tune Stability button allows for automatic adjustment of each motor's stiffness settings (as relayed from the sensors and how the Ronin sees each axis's interaction) to accomplish an optimized setting.
Default: Click here to restore all of the factory settings.

2. Control

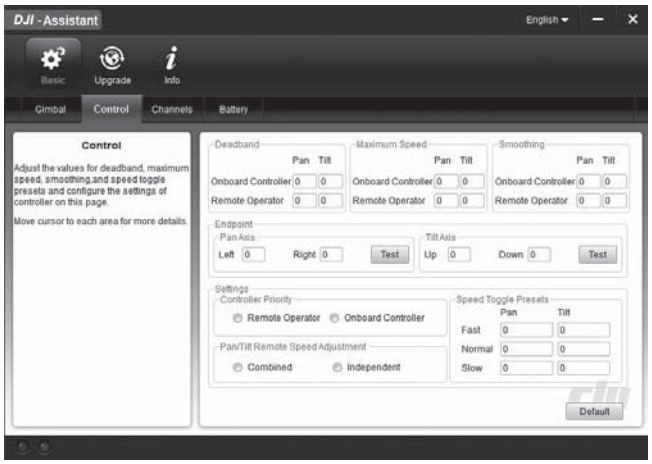

The onboard controller and the remote operator control sticks have a Deadband, Maximum Speed, and Smoothing, all of which can be set independently.
Endpoint: Pan Axis endpoints can be adjusted independently for left and right movement when used with a remote control or the onboard controller. Tilt Axis endpoints can be adjusted independently for up and down

 © 2014 DJI. All Rights Reserved.

movement when used with a remote control or the onboard controller.
If the requirement to rotate 360 degrees on the Pan axis is needed, simply adjust the endpoints for pan to 0. If endpoints are set to 0 for 360 degree Pan ability, then "Test Pan Endpoint" will not move the pan axis.
The Pan and Tilt endpoints can be tested. Ensure the camera is unobstructed when clicking the Test buttons.
Controller Priority: If both input devices send control signals to the gimbal, the selected controller priority will be the only device to send a signal at that given time.
Pan/Tilt Remote Speed Adjustment: Click to choose combined or independent settings.
Speed Toggle Presets: These presets will allow you to change the SmoothTrack speed remotely. If the remote control is turned on, the Speed Toggle Presets for SmoothTrack will take precedence over the Assistant settings. Once the remote control is turned off, the SmoothTrack settings in the Assistant will take over.

3. Channels

This is a channel indicator to provide feedback during remote operator configuration. Pan, Tilt, and Roll can be re-assigned to either of the remote control sticks. The controlled axis can also be reversed.

4. Battery

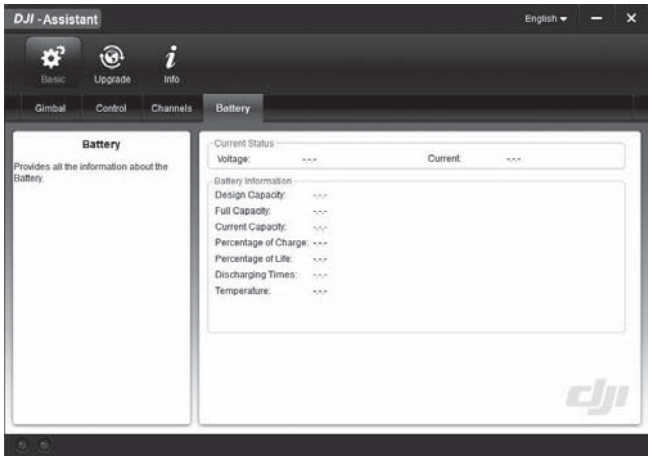

*This page provides all of the essential information regarding the Ronin's battery.

© 2014 DJI. All Rights Reserved.

Upgrade

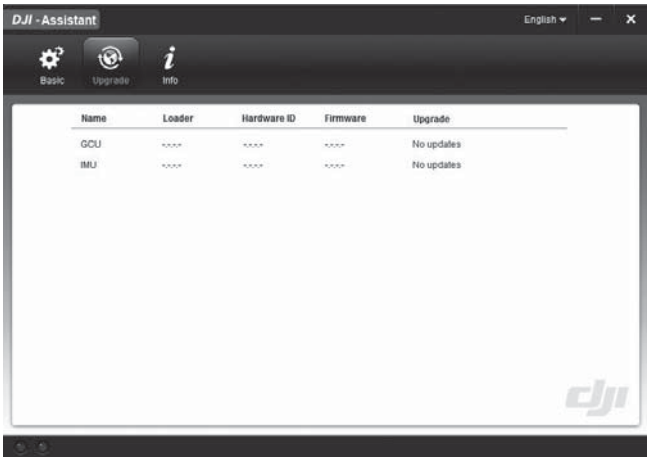

You can view the latest firmware version information on this page. Upgrade the firmware by following the steps below:

1. Connect the Ronin to your computer via the Micro-USB cable and wait until the blue indicator LED in the PC Assistant blinks.
2. Click “Upgrade”.
3. Wait for the download to finish.
4. Click “Upgrade” again and then click “Confirm”.
5. Power the Ronin off and on after the upgrade is complete.

⚠
- Ensure your computer is connected to the internet.
- Close any antivirus programs and network firewalls during the upgrade.
- Ensure the Ronin is powered on during the upgrade.
- Do not disconnect the USB cable during the upgrade.
- Do not power off the Ronin until the upgrade is completed.

 © 2014 DJI. All Rights Reserved.

Info

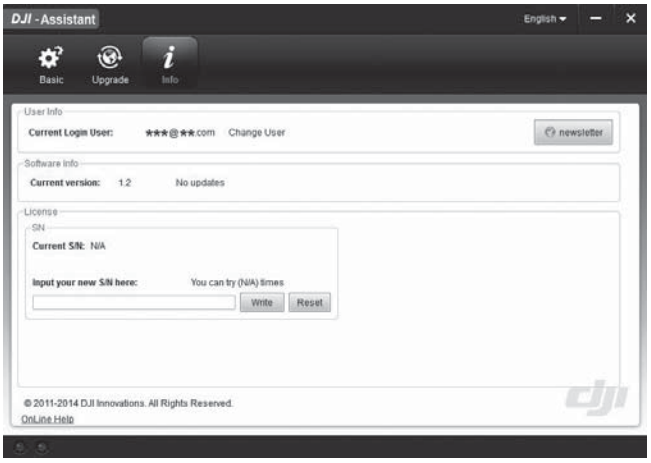

You can check the Assistant version via Info.
S/N is a 32 digit authorization code for future function activations. The authorization code for your unit is filled in after its been manufactured. In the future, you may be asked to fill in a new S/N if you require function upgrades. Fill in the S/N and then click the Write button. If you fill in an invalid S/N more than 30 times, your GCU will be locked and you will have to contact our customer support.

© 2014 DJI. All Rights Reserved.

Remote Control

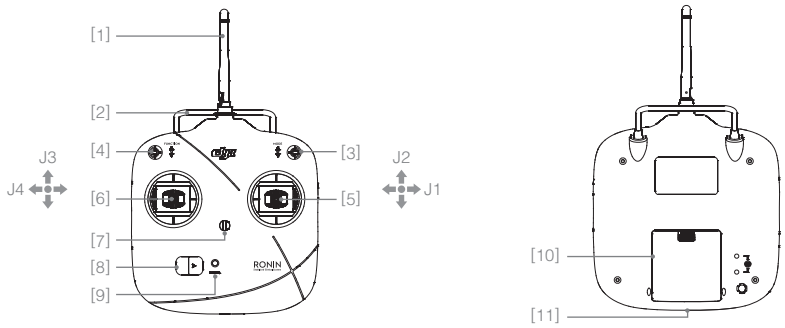

[1] Antenna
[2] Carrying Handle
[3] 3-Position Switch MODE
[4] 3-Position Switch FUNCTION
[5] Joystick 1(J1;J2)
[6] Joystick 2(J3;J4)
[7] Neck Strap Attachment
[8] Power Switch
[9] Power Indicator
[10] Battery Compartment
[11] Micro-USB Port

Connecting the Remote Control to Ronin

1. Insert four AA batteries into the battery compartment on the back of the remote control. Pay attention to the negative and positive poles.
2. Turn on the Ronin, then turn on the Remote Controllers's power switch. The LED on the Ronin will blink red at this time.
3. Press and hold the Bind button (shown below) for a few seconds until the LED blinks green three times. If the LED changes to a solid, red light, the remote control and the Ronin have been successfully bound. The binding process only needs to be done once unless the bind button is pressed or if the Ronin needs to be bound to another remote control.

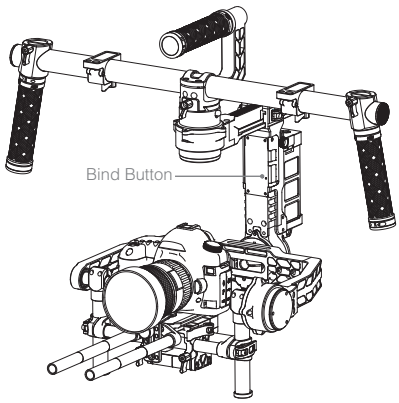

⚠
- Please make sure the batteries have enough capacity before use. If the low voltage warning alert sounds, please replace the batteries as soon as possible.
- Use the correct type of battery.
- For long-term storage, remove the batteries from the remote control.

 © 2014 DJI. All Rights Reserved.

Remote Control Power LED Indicator Status

Power LED Indicator	Sound	Remote Control Status
Ⓡ —— Solid red	None	Normal
Ⓡ ····· Quick Red flashing	B-B-B……	Low voltage alert. It will sound at 4V-4.3V. Replace the batteries immediately.
Ⓡ ····· Slow Red flashing	B--B--B……	Inactivity alert. Will sound after 15 minutes of inactivity. It will stop once you continue using the remote control or turn it off.

⚠ The remote control will automatically power off when the battery voltage drops below 4V.

Remote Control Features

The remote control FCC ID: SS3-201306002

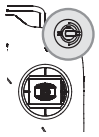

MODE: The MODE switch is used for toggling SmoothTrack.

1. In Position 1, SmoothTrack is off. Remote control will freely position pan axis stops and holds the last input position of the pan axis control stick.
2. In Position 2, SmoothTrack is on. Remote control will freely position pan axis stops and holds the last input position of the pan axis control stick.
3. In Position 3, SmoothTrack is on. The gimbal will always point and reset pan to the forward facing direction once the pan axis control stick is let go.

Position 1 -Free, SmoothTrack Off
Position 2 -Free, SmoothTrack On
Position 3 -Reset to Center, SmoothTrack On

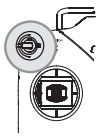

FUNCTION: 1. The FUNCTION switch is used to select the SmoothTrack speed. There are 3 possible selections: Fast, Normal and Slow. The value of each speed can be preset in the App or PC Assistant.

Position 1 -Fast Position 2 -Normal Position 3 -Slow

2. Activating Kill Switch.
Quickly flip the FUNCTION switch between Position 1 and Position 3 consecutively for 3 times and you will activate the motor kill switch. Do the same again to turn off the motor kill switch. Prior to re-activating the gimbal motors, be sure to position the camera in the standard operating position. The motor kill switch is useful in case the gimbal operator runs into an issue or you need to make a quick mechanical adjustment to the gimbal or camera setup.

© 2014 DJI. All Rights Reserved.

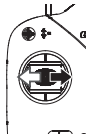	Left Stick: Horizontal movements on the left stick control the Roll axis. Vertical movements have no definition.		
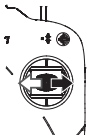	Right Stick: Horizontal movements ont the right stick control the Pan axis.		Right Stick:Vertical movements on the right stick control the Tilt axis.

These stick settings can be customized in the DJI Ronin Assistant App or PC Assistant.

Operation Modes

There are three operation modes in the Ronin: underslung mode, upright mode and briefcase mode.

Underslung Mode

Underslung mode is the standard, default mode. It can be used without any user input.

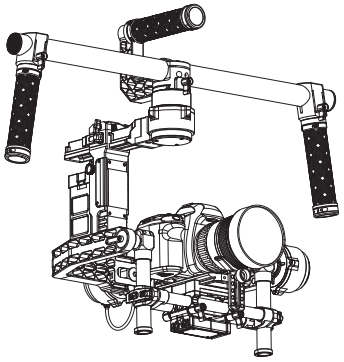

 © 2014 DJI. All Rights Reserved.

Upright Mode

Flip the gimbal forward 180 degrees and it will automatically change to upright mode. Alternatively, you can set the gimbal into upright mode before turning it on. Upright mode is ideal for car mounts or other high camera positions, as it allows you to shoot higher and/or at eye level. Upright mode can be used without any user input. Do not flip the gimbal over sideways going left or right to convert to upright mode.

Briefcase Mode

Briefcase mode allows you to hold the Ronin in a slim profile close to your body. To enter briefcase mode, tilt the gimbal on the roll axis 90 degrees to the left or right. You may turn briefcase mode off in the gimbal app, in which case the Ronin will never automatically transform into briefcase mode. In briefcase mode, the remote control does not have pan or roll control of the Ronin.

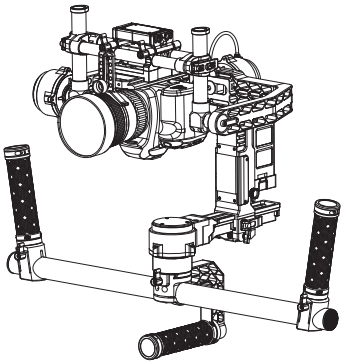

Upright Mode

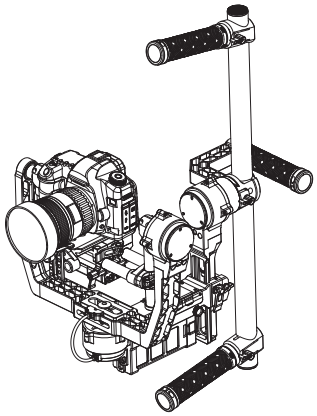

Briefcase Mode

Maintenance

The figure to the right shows the proper way to transport the Ronin with the stand. Using the hook-and-loop straps, lock the Ronin gimbal in place as shown. Be sure to undo the straps prior to turning the Ronin on!

The Ronin is a precise machine and it is not water resistant. Keep it away from sand and dust during usage. After use, it is recommended to wipe the Ronin down with a soft dry cloth. Never spray any cleaning liquids onto the Ronin.

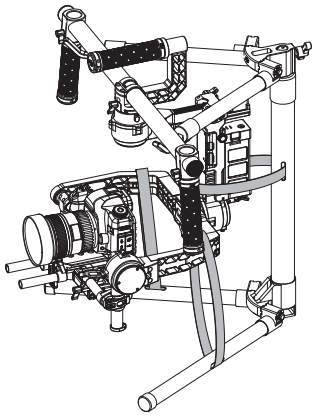

© 2014 DJI. All Rights Reserved.

Troubleshooting

NO.	The Problem	What to Do
1	Motors appear to be weak	After camera balancing, launch the Assistant App or the PC Assistant and start the Auto Tune Stability. Wait for the process to complete and the stiffness settings will be populated on the screen.
2	If after tapping the Auto Tune Stability button and the gimbal is still vibrating	(1) Check to make sure all knobs are very tight. Including the pan motor knob. (2) Check to make sure the camera securing screw is tight. Push on the camera plate to make sure it is not loose and sliding in the camera mount. (3) Try decreasing the stiffness of the each axis. You should be able to tell if there is one particular axis being affected by looking at the "power" of the axes.
3	Pan axis seems off center	Go into the Assistant App or PC Assistant, tap/click the Calibrate Center and follow the on-screen instructions.
4	Ronin seems to be drifting	Place the Ronin on the tuning stand and in the Assistant App or the PC Assistant, tap/click the Calibrate System button. Let the process complete before picking up the Ronin.
5	SmoothTrack doesn't work	(1) Turn on the Remote control and be sure the MODE switch is not at Position 1 (the uppermost position). (2) SmoothTrack is turned off in the Assistant App or the PC Assistant software. (3) the SmoothTrack Deadband is turned up too high. Reduce the Deadband size in the SmoothTrack Menu.
6	Motors seem to shutoff automatically	Check your camera balance. If the power indicated in the Gimbal Motors Menu indicates 10 or more on any of the 3 axes, please rebalance your camera.
7	Gimbal shuts off and doesn't come back on	Power cycle the gimbal. This is a motor protection algorithm that's built into the Ronin to save it's own electronic components. If any particular motor goes into a self protection mode (motor shuts off) 6 times within a 1 minute period, the Ronin will shut off power to the motors and will not come back to life unless power cycled.
8	Forgot the Bluetooth password	Connect Ronin to the PC Assistant and click the "Reset Password" button to reset your password.
9	Footage appears to wobble side to side or up and down	SmoothTrack speed is too high or SmoothTrack deadband is too low. Decrease the SmoothTrack speed or increase the deadband.

 © 2014 DJI. All Rights Reserved.

Specification

General		
Built-In Functions	• Three Operation Modes Underslung Mode Upright Mode Briefcase Mode • Built-in independent IMU module • DJI Specialized Gimbal Drive Motors with Encoders	• Bluetooth Module • USB Connection • 2.4GHz Receiver • Temperature Sensor • DJI Advanced 32-Bit DSP Processor • D-Bus/PPM Receiver Supported
Peripheral		
Camera Tray Dimensions	Maximum depth at center of mass on camera base plate: 140mm Maximum height measured from top of camera base plate: 225mm Maximum width: 195mm	
Accessory Power Connections	12V regulated P-Tap x 2, USB 500mW x 1, DJI Lightbridge x 1	
GCU Input Power	4S Ronin Battery	
Connections	2.4GHz Remote Control, Bluetooth, USB	
PC Assistant Software Requirements	Windows XP SP3; Windows 7; Windows 8 (32 or 64 bit)	
Mobile Assistant Software Requirements	iOS version 6.1 or above. Mobile devices: iPhone 4s, iPhone 5, iPhone 5s, iPod touch 4, iPod touch 5 , iPad 3, iPad 4, iPad mini	
Mechanical & Electrical Characteristics		
Working Current	• Static current: 300mA (@16V) • Dynamic current: 600mA (@16V) • Locked motor current: Max 10A (@16V)	
Operating Temperature	-15°C ~ 50°C (-5°F ~ 120°F)	
Weight	4.20kg (9.26lbs) fully loaded with handlebar	
Gimbal Dimensions	620mm(W) x 280-380mm (D) x 500mm(H)	
Working Performance		
Load Weight Capacity (Reference Value)	7.25kg (16lbs)	
Control Angle Accuracy	0.02°	
Maximum Control Rotation Speed	Pan axis: 90°/sec Tilt axis: 100°/sec Roll axis: 30°/sec	
Control Rotation Range	Pan axis control: 360° Tilt axis control: Up 45° to Down 120° Roll axis control: ± 25°	

© 2014 DJI. All Rights Reserved.

FCC statements:

This device complies with part 15 of the FCC rules. Operation is subject to the following two conditions: (1) this device may not cause harmful interference, and (2) this device must accept any interference received, including interference that may cause undesired operation.

NOTE: The manufacturer is not responsible for any radio or TV interference caused by unauthorized modifications or changes to this equipment. Such modifications or changes could void the user's authority to operate the equipment.

NOTE: This equipment has been tested and found to comply with the limits for a Class B digital device, pursuant to part 15 of the FCC Rules. These limits are designed to provide reasonable protection against harmful interference in a residential installation. This equipment generates uses and can radiate radio frequency energy and, if not installed and used in accordance with the instructions, may cause harmful interference to radio communications. However, there is no guarantee that interference will not occur in a particular installation. If this equipment does cause harmful interference to radio or television reception, which can be determined by turning the equipment off and on, the user is encouraged to try to correct the interference by one or more of the following measures:

- Reorient or relocate the receiving antenna.
- Increase the separation between the equipment and receiver.
-Connect the equipment into an outlet on a circuit different from that to which the receiver is connected.
-Consult the dealer or an experienced radio/TV technician for help.

Power is so low that no RF exposure calculation is needed.