TESTING LABORATORY
CERTIFICATE #4820.01

SAR EVALUATION REPORT

For

SZ DJI TECHNOLOGY CO., LTD

14th floor, West Wing, Skyworth Semiconductor Design Building NO.18 Gaoxin South 4th Ave, Nanshan, Shenzhen, Guangdong, China

FCC ID: SS3-P1RC1901

IC: 11805A-P1RC1901

Report Type:	**Product Type:**
Original Report	DJI FPV Remote Controller

Report Number: RDG190321008-20

Report Date: 2019-04-15

Reviewed By: Rocky Xiao
RF Engineer
Rocky Xiao

Prepared By: Bay Area Compliance Laboratories Corp. (Dongguan)
No.69 Pulongcun, Puxinhu Industry Area,
Tangxia, Dongguan, Guangdong, China
Tel: +86-769-86858888
Fax: +86-769-86858891
www.baclcorp.com.cn

Note: This test report is prepared for the customer shown above and for the device described herein. It may not be duplicated or used in part without prior written consent from Bay Area Compliance Laboratories Corp. (Dongguan).
This report must not be used by the customer to claim product certification, approval, or endorsement by A2LA* or any agency of the Federal Government. * This report may contain data that are not covered by the A2LA accreditation and are marked with an asterisk "*"

Attestation of Test Results			
EUT Information	**EUT Description**	DJI FPV Remote Controller	
	Tested Model	P1RC	
	FCC ID	SS3-P1RC1901	
	IC	11805A-P1RC1901	
	Serial Number	19032100820	
	Test Date	2019-04-09 ~ 2019-04-10	
MODE		**Max. SAR Level(s) Reported(W/kg)**	**Limit**
SDR 5.8GHz	10g Extremity SAR	**1.65**	**4.0 W/kg**
Simultaneous	10g Extremity SAR	**2.62**	
SDR 5.8GHz	1g Body SAR	**0.81**	**1. 6 W/kg**
Simultaneous	1g Body SAR	**1.53**	
Applicable Standards	**FCC 47 CFR part 2.1093** Radiofrequency radiation exposure evaluation: portable devices		
	RSS-102 Issue 5 March 2015 Radio Frequency (RF) Exposure Compliance of Radio communication Apparatus (All Frequency Bands).		
	IEEE1528:2013 IEEE Recommended Practice for Determining the Peak Spatial-Average Specific Absorption Rate (SAR) in the Human Head from Wireless Communications Devices: Measurement Techniques		
	IEC 62209-2:2010 Human exposure to radio frequency fields from hand-held and body-mounted wireless communication devices-Human models, instrumentation, and procedures-Part 2: Procedure to determine the specific absorption rate (SAR) for wireless communication devices used in close proximity to the human body (frequency range of 30 MHz to 6 GHz)		
	KDB procedures KDB 447498 D01 General RF Exposure Guidance v06. KDB 865664 D01 SAR Measurement 100 MHz to 6 GHz v01r04 KDB 865664 D02 RF Exposure Reporting v01r02 KDB 941225 D07 UMPC Mini Tablet v01r02		
Note: This wireless device has been shown to be capable of compliance for localized specific absorption rate (SAR) for General Population/Uncontrolled Exposure limits specified in **FCC 47 CFR part 2.1093/RSS-102 Issue 5 March 2015** and has been tested in accordance with the measurement procedures specified in IEEE 1528-2013 and RF exposure KDB procedures. **The results and statements contained in this report pertain only to the device(s) evaluated.**			

TABLE OF CONTENTS

DOCUMENT REVISION HISTORY **4**
EUT DESCRIPTION **5**
TECHNICAL SPECIFICATION 5
REFERENCE, STANDARDS, AND GUIDELINES **6**
SAR LIMITS 7
FACILITIES **8**
DESCRIPTION OF TEST SYSTEM **9**
EQUIPMENT LIST AND CALIBRATION **14**
EQUIPMENTS LIST & CALIBRATION INFORMATION 14
SAR MEASUREMENT SYSTEM VERIFICATION **15**
LIQUID VERIFICATION 15
SYSTEM ACCURACY VERIFICATION 16
SAR SYSTEM VALIDATION DATA 17
EUT TEST STRATEGY AND METHODOLOGY **19**
TEST POSITIONS FOR DEVICE OPERATING NEXT TO A PERSON'S EAR 19
CHEEK/TOUCH POSITION 20
EAR/TILT POSITION 20
TEST POSITIONS FOR BODY-WORN AND OTHER CONFIGURATIONS 21
TEST DISTANCE FOR SAR EVALUATION 21
SAR EVALUATION PROCEDURE 22
CONDUCTED OUTPUT POWER MEASUREMENT **23**
TEST PROCEDURE 23
MAXIMUM TARGET OUTPUT POWER 23
TEST RESULTS: 23
SAR EXCLUSION CONSIDERATIONS **24**
ANTENNAS LOCATION: 24
ANTENNA DISTANCE TO EDGE 24
SAR TEST EXCLUSION FOR THE EUT EDGE CONSIDERATIONS(KDB) 24
SAR TEST EXCLUSION FOR THE EUT EDGE CONSIDERATION(RSS-102) 24
SAR TEST EXCLUSION FOR THE EUT EDGE CONSIDERATIONS RESULT 25
SAR MEASUREMENT RESULTS **26**
SAR TEST DATA 26
SAR MEASUREMENT VARIABILITY **33**
SAR SIMULTANEOUS TRANSMISSION DESCRIPTION **34**
SAR PLOTS **35**
APPENDIX A MEASUREMENT UNCERTAINTY **36**
APPENDIX B CALIBRATION CERTIFICATES **38**
APPENDIX C EUT TEST POSITION PHOTOS **39**

DOCUMENT REVISION HISTORY

Revision Number	Report Number	Description of Revision	Date of Revision
1.0	RDG190321008-20	Original Report	2019-04-15

EUT DESCRIPTION

This report has been prepared on behalf of ***SZ DJI TECHNOLOGY CO., LTD*** and their product ***DJI FPV Remote Controller***, Model: ***P1RC***, FCC ID: ***SS3-P1RC1901***, IC: ***11805A-P1RC1901*** or the EUT (Equipment under Test) as referred to in the rest of this report.

All measurement and test data in this report was gathered from production sample serial number: 19032100820 (Assigned by BACL). The EUT was received on 2019-03-25.

Technical Specification

Device Type:	Portable
Exposure Category:	Population / Uncontrolled
Antenna Type(s):	External Antenna
Operation Mode :	SDR 5.8G
Accessories:	None
Frequency Band:	SDR 5.8G: 5725~5875 MHz
Conducted RF Power:	SDR 5.8G Chain1: 20.27 dBm
	SDR 5.8G Chain2: 21.29 dBm
Dimensions (L*W*H):	180mm(L)* 170mm(W)* 190 mm(H) (including antenna)
Power Source:	7.6 VDC Rechargeable Battery
Normal Operation:	Handheld and Close to Body

REFERENCE, STANDARDS, AND GUIDELINES

FCC:

The Report and Order requires routine SAR evaluation prior to equipment authorization of portable transmitter devices, including portable telephones. For consumer products, the applicable limit is 1.6 mW/g as recommended by the ANSI/IEEE standard C95.1-1992 [6] for an uncontrolled environment (Paragraph 65). According to the Supplement C of OET Bulletin 65 “Evaluating Compliance with FCC Guide-lines for Human Exposure to Radio frequency Electromagnetic Fields", released on Jun 29, 2001 by the FCC, the device should be evaluated at maximum output power (radiated from the antenna) under “worst-case” conditions for normal or intended use, incorporating normal antenna operating positions, device peak performance frequencies and positions for maximum RF energy coupling.

This report describes the methodology and results of experiments performed on wireless data terminal. The objective was to determine if there is RF radiation and if radiation is found, what is the extent of radiation with respect to safety limits. SAR (Specific Absorption Rate) is the measure of RF exposure determined by the amount of RF energy absorbed by human body (or its parts) – to determine how the RF energy couples to the body or head which is a primary health concern for body worn devices. The limit below which the exposure to RF is considered safe by regulatory bodies in North America is 1.6 mW/g average over 1 gram of tissue mass.

CE:

The order requires routine SAR evaluation prior to equipment authorization of portable transmitter devices, including portable telephones. For consumer products, the applicable limit is 2 mW/g as recommended by EN62209-1 for an uncontrolled environment. According to the Standard, the device should be evaluated at maximum output power (radiated from the antenna) under “worst-case” conditions for normal or intended use, incorporating normal antenna operating positions, device peak performance frequencies and positions for maximum RF energy coupling.

This report describes the methodology and results of experiments performed on wireless data terminal. The objective was to determine if there is RF radiation and if radiation is found, what is the extent of radiation with respect to safety limits. SAR (Specific Absorption Rate) is the measure of RF exposure determined by the amount of RF energy absorbed by human body (or its parts) – to determine how the RF energy couples to the body or head which is a primary health concern for body worn devices. The limit below which the exposure to RF is considered safe by regulatory bodies in Europe is 2 mW/g average over 10 gram of tissue mass.

The test configurations were laid out on a specially designed test fixture to ensure the reproducibility of measurements. Each configuration was scanned for SAR. Analysis of each scan was carried out to characterize the above effects in the device.

SAR Limits

FCC&IC Limit

EXPOSURE LIMITS	SAR (W/kg)	
	(General Population / Uncontrolled Exposure Environment)	(Occupational / Controlled Exposure Environment)
Spatial Average (averaged over the whole body)	0.08	0.4
Spatial Peak (averaged over any 1 g of tissue)	**1.60**	8.0
Spatial Peak (hands/wrists/feet/ankles averaged over 10 g)	**4.0**	20.0

CE Limit

EXPOSURE LIMITS	SAR (W/kg)	
	(General Population / Uncontrolled Exposure Environment)	(Occupational / Controlled Exposure Environment)
Spatial Average (averaged over the whole body)	0.08	0.4
Spatial Peak (averaged over any 10 g of tissue)	2.0	10
Spatial Peak (hands/wrists/feet/ankles averaged over 10 g)	4.0	20.0

Population/Uncontrolled Environments are defined as locations where there is the exposure of individual who have no knowledge or control of their exposure.

Occupational/Controlled Environments are defined as locations where there is exposure that may be incurred by people who are aware of the potential for exposure (i.e. as a result of employment or occupation).

General Population/Uncontrolled environments Spatial Peak limit 4.0W/kg for 10g Extremity SAR and 1.6W/kg for 1g Body SAR applied to the EUT.

FACILITIES

The Test site used by Bay Area Compliance Laboratories Corp. (Dongguan) to collect test data is located on the No.69 Pulongcun, Puxinhu Industry Area, Tangxia, Dongguan, Guangdong, China.

The lab has been recognized as the FCC accredited lab under the KDB 974614 D01 and is listed in the FCC Public Access Link (PAL) database, FCC Registration No. : 897218, the FCC Designation No. : CN1220.

The lab has been recognized by Innovation, Science and Economic Development Canada to test to Canadian radio equipment requirements, the CAB identifier : CN0022.

The test sites and measurement facilities used to collect data are located at:

☐ SAR Lab 1	☒ SAR Lab 2

DESCRIPTION OF TEST SYSTEM

These measurements were performed with the automated near-field scanning system DASY5 from Schmid & Partner Engineering AG (SPEAG) which is the Fifth generation of the system shown in the figure hereinafter:

DASY5 System Description

The DASY5 system for performing compliance tests consists of the following items:

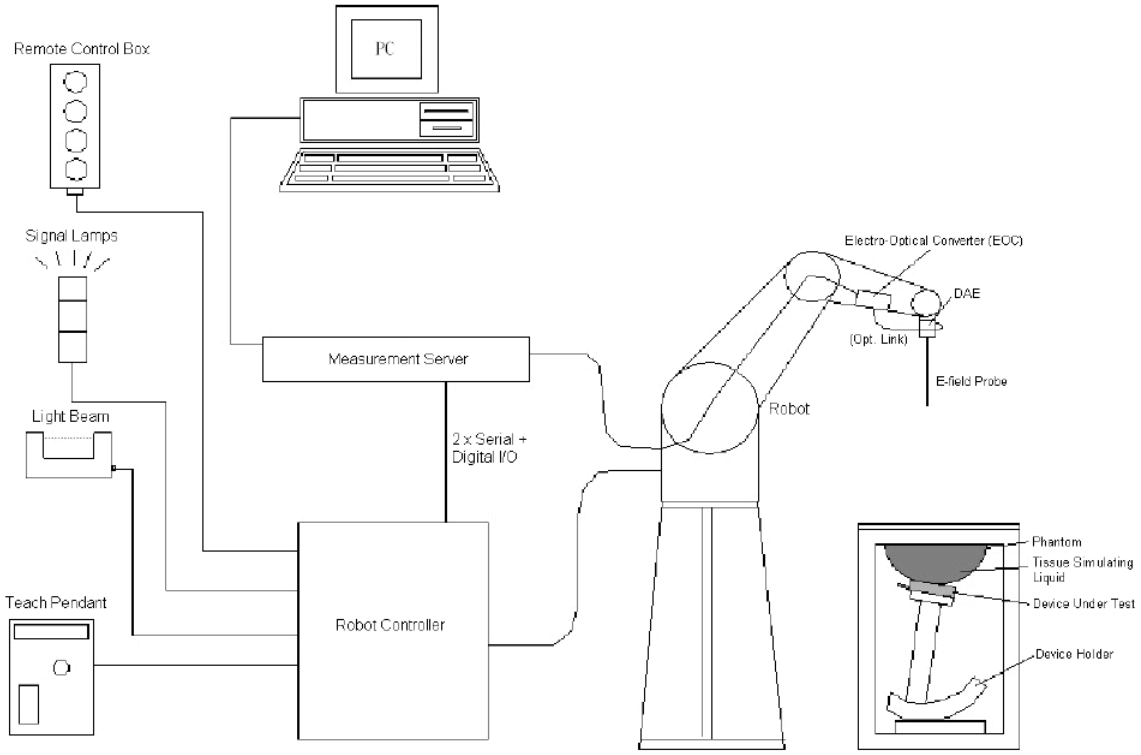

- A standard high precision 6-axis robot with controller, teach pendant and software. An arm extension for accommodating the data acquisition electronics (DAE).
- An isotropic field probe optimized and calibrated for the targeted measurement.
- A data acquisition electronics (DAE) which performs the signal application, signal multiplexing, AD-conversion, offset measurements, mechanical surface detection, collision detection, etc. The unit is battery powered with standard or rechargeable batteries. The signal is optically transmitted to the EOC.
- The Electro-optical converter (EOC) performs the conversion from optical to electrical signals for the digital communication to the DAE. To use optical surface detection, a special version of the EOC is required. The EOC signal is transmitted to the measurement server.
- The function of the measurement server is to perform the time critical tasks such as signal filtering, control of the robot operation and fast movement interrupts.
- The Light Beam used is for probe alignment. This improves the (absolute) accuracy of the probe positioning.
- A computer running Win7 professional operating system and the DASY52 software.
- Remote control and teach pendant as well as additional circuitry for robot safety such as warning lamps, etc.
- The phantom, the device holder and other accessories according to the targeted measurement.

DASY5 Measurement Server

The DASY5 measurement server is based on a PC/104 CPU board with a 400MHz Intel ULV Celeron, 128MB chip-disk and 128MB RAM. The necessary circuits for communication with the DAE4 (or DAE3) electronics box, as well as the 16 bit AD-converter system for optical detection and digital I/O interface are contained on the DASY5 I/O board, which is directly connected to the PC/104 bus of the CPU board.

The measurement server performs all real-time data evaluation of field measurements and surface detection, controls robot movements and handles safety operation. The PC operating system cannot interfere with these time critical processes. All connections are supervised by a watchdog, and disconnection of any of the cables to the measurement server will automatically disarm the robot and disable all program-controlled robot movements. Furthermore, the measurement server is equipped with an expansion port which is reserved for future applications. Please note that this expansion port does not have a standardized point out, and therefore only devices provided by SPEAG can be connected. Devices from any other supplier could seriously damage the measurement server.

Data Acquisition Electronics

The data acquisition electronics (DAE4) consist of a highly sensitive electrometer-grade preamplifier with auto-zeroing, a channel and gain-switching multiplexer, a fast 16 bit AD-converter and a command decoder with a control logic unit. Transmission to the measurement server is accomplished through an optical downlink for data and status information, as well as an optical uplink for commands and the clock.

The mechanical probe mounting device includes two different sensor systems for frontal and sideways probe contacts. They are used for mechanical surface detection and probe collision detection.

The input impedance of both the DAE4 as well as of the DAE3 box is 200MOhm; the inputs are symmetrical and floating. Common mode rejection is above 80 dB.

EX3DV4 E-Field Probes

Frequency	10 MHz to > 6 GHz Linearity: ± 0.2 dB (30 MHz to 6 GHz)
Directivity	± 0.3 dB in TSL (rotation around probe axis) ± 0.5 dB in TSL (rotation normal to probe axis)
Dynamic Range	10 µW/g to > 100 mW/g Linearity: ± 0.2 dB (noise: typically < 1 µW/g)
Dimensions	Overall length: 337 mm (Tip: 20 mm) Tip diameter: 2.5 mm (Body: 12 mm) Typical distance from probe tip to dipole centers: 1 mm
Application	High precision dosimetric measurements in any exposure scenario (e.g., very strong gradient fields); the only probe that enables compliance testing for frequencies up to 6 GHz with precision of better 30%.
Compatibility	DASY3, DASY4, DASY52 SAR and higher, EASY4/MRI

Calibration Frequency Points for EX3DV4 E-Field Probes SN: 7329 Calibrated: 2018/9/30

Calibration Frequency Point(MHz)	Frequency Range(MHz)		Conversion Factor		
	From	To	X	Y	Z
750 Head	650	850	10.01	10.01	10.01
750 Body	650	850	10.23	10.23	10.23
900 Head	850	1000	9.66	9.66	9.66
900 Body	850	1000	9.79	9.79	9.79
1750 Head	1650	1850	8.35	8.35	8.35
1750 Body	1650	1850	8.05	8.05	8.05
1900 Head	1850	2000	8.1	8.1	8.1
1900 Body	1850	2000	7.7	7.7	7.7
2450 Head	2350	2550	7.62	7.62	7.62
2450 Body	2350	2550	7.47	7.47	7.47
2600 Head	2550	2700	7.38	7.38	7.38
2600 Body	2550	2700	7.12	7.12	7.12
5200 Head	5090	5250	5.52	5.52	5.52
5200 Body	5090	5250	4.92	4.92	4.92
5300 Head	5250	5410	5.28	5.28	5.28
5300 Body	5250	5410	4.79	4.79	4.79
5600 Head	5490	5700	4.71	4.71	4.71
5600 Body	5490	5700	4.14	4.14	4.14
5800 Head	5700	5910	4.68	4.68	4.68
5800 Body	5700	5910	4.37	4.37	4.37

Triple Flat Phantom

The SAM twin phantom is a fiberglass shell phantom with 2mm(± 0.2 mm) shell thickness . The phantom shell is compatible with SPEAG tissue simulating liquids (sugar and oil based). Use of other liquids may render the phantom warranty void (see note or consult SPEAG support).

The phantom table have the size of 100 x 75 x 91 cm (L x W x H).
For easy dislocation these tables have fork lift cut outs at the bottom.
The bottom plate contains three pairs of bolts for locking the device holder. The device holder positions are adjusted to the standard measurement positions in the three sections. Only one device holder is necessary if two phantoms are used (e.g., for different liquids)

A white cover is provided to cover the phantom during off-periods to prevent water evaporation and changes in the liquid parameters. Free space scans of devices on top of this phantom cover are possible. Three reference marks are provided on the phantom counter. These reference marks are used to teach the absolute phantom position relative to the robot.

Robots

The DASY5 system uses the high precision industrial robot. The robot offers the same features important for our application:

- High precision (repeatability 0.02mm)
- High reliability (industrial design)
- Low maintenance costs (virtually maintenance free due to direct drive gears; no belt drives)
- Jerk-free straight movements (brushless synchrony motors; no stepper motors)
- Low ELF interference (motor control fields shielded via the closed metallic construction shields)

The above mentioned robots are controlled by the Staubli CS8c robot controllers. All information regarding the use and maintenance of the robot arm and the robot controller is contained on the CDs delivered along with the robot. Paper manuals are available upon request direct from Staubli.

Area Scans

Area scans are defined prior to the measurement process being executed with a user defined variable spacing between each measurement point (integral) allowing low uncertainty measurements to be conducted. Scans defined for FCC applications utilize a 15mm 2 step integral, with 1.5mm interpolation used to locate the peak SAR area used for zoom scan assessments.

Where the system identifies multiple SAR peaks (which are within 25% of peak value) the system will provide the user with the option of assessing each peak location individually for zoom scan averaging.

Zoom Scan (Cube Scan Averaging)

The averaging zoom scan volume utilized in the DASY5 software is in the shape of a cube and the side dimension of a 1 g or 10 g mass is dependent on the density of the liquid representing the simulated tissue. A density of 1000 kg/m^3 is used to represent the head and body tissue density and not the phantom liquid density, in order to be consistent with the definition of the liquid dielectric properties, i.e. the side length of the 1g cube is 10mm,with the side length of the 10g cube is 21.5mm.

When the cube intersects with the surface of the phantom, it is oriented so that 3 vertices touch the surface of the shell or the center of a face is tangent to the surface. The face of the cube closest to the surface is modified in order to conform to the tangent surface.

The zoom scan integer steps can be user defined so as to reduce uncertainty, but normal practice for typical test applications (including FCC) utilize a physical step of 7 x7 x 7 (5mmx5mmx5mm) providing a volume of 30 mm in the X & Y & Z axis.

Tissue Dielectric Parameters for Head and Body Phantoms

The head tissue dielectric parameters recommended by the IEEE SCC-34/SC-2 in P1528 have been incorporated in the following table. These head parameters are derived from planar layer models simulating the highest expected SAR for the dielectric properties and tissue thickness variations in a human head. Other head and body tissue parameters that have not been specified in P1528 are derived from the tissue dielectric parameters computed from the 4-Cole-Cole equations described in Reference [12] and extrapolated according to the head parameters specified in P1528.

Recommended Tissue Dielectric Parameters for Head and Body

Frequency (MHz)	Head Tissue		Body Tissue	
	εr	σ (S/m)	εr	σ (S/m)
150	52.3	0.76	61.9	0.80
300	45.3	0.87	58.2	0.92
450	43.5	0.87	56.7	0.94
835	41.5	0.90	55.2	0.97
900	41.5	0.97	55.0	1.05
915	41.5	0.98	55.0	1.06
1450	40.5	1.20	54.0	1.30
1610	40.3	1.29	53.8	1.40
1800-2000	40.0	1.40	53.3	1.52
2450	39.2	1.80	52.7	1.95
3000	38.5	2.40	52.0	2.73
5800	35.3	5.27	48.2	6.00

EQUIPMENT LIST AND CALIBRATION

Equipments List & Calibration Information

Equipment	Model	S/N	Calibration Date	Calibration Due Date
DASY5 Test Software	DASY52.8	N/A	NCR	NCR
DASY5 Measurement Server	DASY5 4.5.12	1567	NCR	NCR
Data Acquisition Electronics	DAE4	772	2018/9/28	2019/9/28
E-Field Probe	EX3DV4	7329	2018/9/30	2019/9/29
Mounting Device	MD4HHTV5	BJPCTC0152	NCR	NCR
Triple Flat Phantom 5.1C	QD 000 P51 CA	1130	NCR	NCR
Dipole,5GHz	D5GHzV2	1246	2016/11/7	2019/11/6
Simulated Tissue 5800 MHz Body	TS-5800-B	1701580002	Each Time	/
Network Analyzer	8753C	3033A02857	2018/8/3	2019/8/3
Dielectric assessment kit	1253	SM DAK 040 CA	NCR	NCR
Signal Generator	8665B	3438a00584	2018/7/19	2019/7/19
Power Meter	E4419B	MY45103907	2018/4/11	2019/4/11
Power Amplifier	60S1G6	348711	NCR	NCR
Directional Coupler	PE2239-30	1711	NCR	NCR
Attenuator	20dB, 100W	LN749	NCR	NCR
Attenuator	6dB, 150W	2754	NCR	NCR

SAR MEASUREMENT SYSTEM VERIFICATION

Liquid Verification

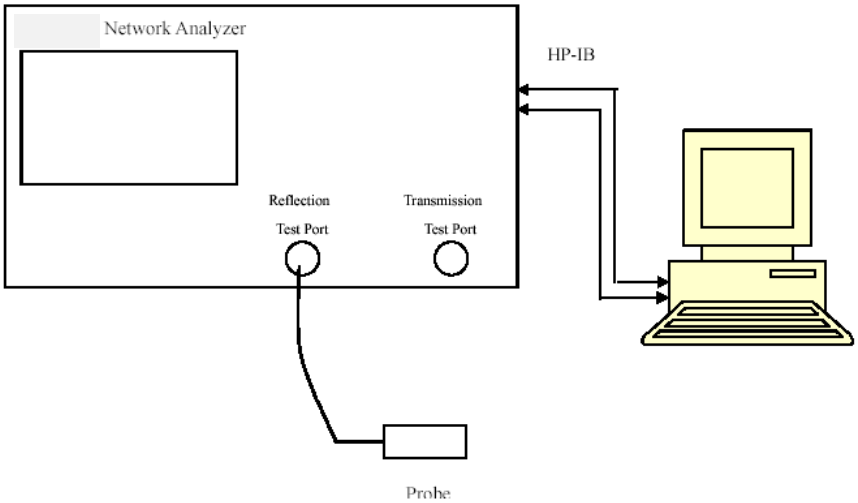

Liquid Verification Setup Block Diagram

Liquid Verification Results

Frequency (MHz)	Liquid Type	Liquid Parameter		Target Value		Delta (%)		Tolerance (%)
		ε_r	σ (S/m)	ε_r	σ (S/m)	$\Delta\varepsilon_r$	Δσ (S/m)	
5731.5	Simulated Tissue 5800 MHz Body	48.963	5.737	48.29	5.92	1.39	-3.09	±5
5784.12	Simulated Tissue 5800 MHz Body	48.81	5.754	48.22	5.98	1.22	-3.78	±5
5800	Simulated Tissue 5800 MHz Body	48.764	5.759	48.2	6	1.17	-4.02	±5
5846.12	Simulated Tissue 5800 MHz Body	48.613	5.794	48.14	6.05	0.98	-4.23	±5

**Liquid Verification above was performed on 2019-04-09.*

Frequency (MHz)	Liquid Type	Liquid Parameter		Target Value		Delta (%)		Tolerance (%)
		ε_r	σ (S/m)	ε_r	σ (S/m)	$\Delta\varepsilon_r$	Δσ (S/m)	
5731.5	Simulated Tissue 5800 MHz Body	48.816	5.703	48.29	5.92	1.09	-3.67	±5
5784.12	Simulated Tissue 5800 MHz Body	48.643	5.731	48.22	5.98	0.88	-4.16	±5
5800	Simulated Tissue 5800 MHz Body	48.589	5.764	48.2	6	0.81	-3.93	±5
5846.12	Simulated Tissue 5800 MHz Body	48.517	5.805	48.14	6.05	0.78	-4.05	±5

**Liquid Verification above was performed on 2019-04-10.*

System Accuracy Verification

Prior to the assessment, the system validation kit was used to test whether the system was operating within its specifications of ±10%. The validation results are tabulated below. And also the corresponding SAR plot is attached as well in the SAR plots files.

The spacing distances in the **System Verification Setup Block Diagram** is given by the following:

a) s = 15 mm ± 0,2 mm for 300 MHz ≤ f ≤ 1 000 MHz;

b) s = 10 mm ± 0,2 mm for 1 000 MHz < f ≤ 3 000 MHz;

c) s = 10 mm ± 0,2 mm for 3 000 MHz < f ≤ 6 000 MHz.

System Verification Setup Block Diagram

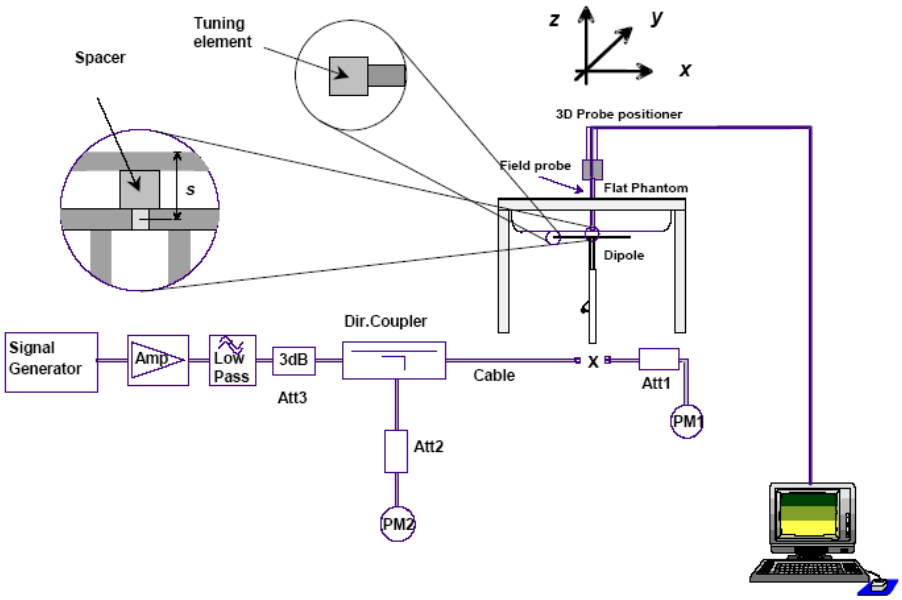

System Accuracy Check Results

Date	Frequency Band	Liquid Type	Input Power (mW)	Measured SAR (W/kg)		Normalized to 1W (W/kg)	Target Value (W/kg)	Delta (%)	Tolerance (%)
2019/04/09	5800 MHz	Body	100	1g	7.71	77.1	75.4	2.25	±10
				10g	2.19	21.9	20.9	4.78	±10
2019/04/10	5800 MHz	Body	100	1g	7.65	76.5	75.4	1.46	±10
				10g	2.17	21.7	20.9	3.83	±10

*The SAR values above are normalized to 1 Watt forward power.

SAR SYSTEM VALIDATION DATA

System Performance 5800 MHz Body 2019/04/09

DUT: D5GHzV2; Type: 5800 MHz; Serial: SN:1246

Communication System: CW; Frequency: 5800 MHz;Duty Cycle: 1:1
Medium parameters used: f = 5800 MHz; σ = 5.759 S/m; ε_r = 48.764; ρ = 1000 kg/m^3
Phantom section: Center Section

DASY5 Configuration:

- Probe: EX3DV4 - SN7329; ConvF(4.37, 4.37, 4.37); Calibrated: 2018/9/30;
- Sensor-Surface: 1.4mm (Mechanical Surface Detection)
- Electronics: DAE4 Sn772;Calibrated: 2018/9/28
- Phantom: Triple Flat Phantom 5.1C; Type: QD 000 P51 CA; Serial: 1130
- Measurement SW: DASY52, Version 52.8 (8);

Area Scan (81x51x1): Interpolated grid: dx=0.6000 mm, dy=0.6000 mm
Maximum value of SAR (interpolated) = 19.4 W/kg

Zoom Scan (7x7x7)/Cube 0: Measurement grid: dx=4mm, dy=4mm, dz=1.4mm
Reference Value = 39.23 V/m; Power Drift = 0.01 dB
Peak SAR (extrapolated) = 29.3 W/kg
SAR(1 g) = 7.71 W/kg; SAR(10 g) = 2.19 W/kg
Maximum value of SAR (measured) = 19.0 W/kg

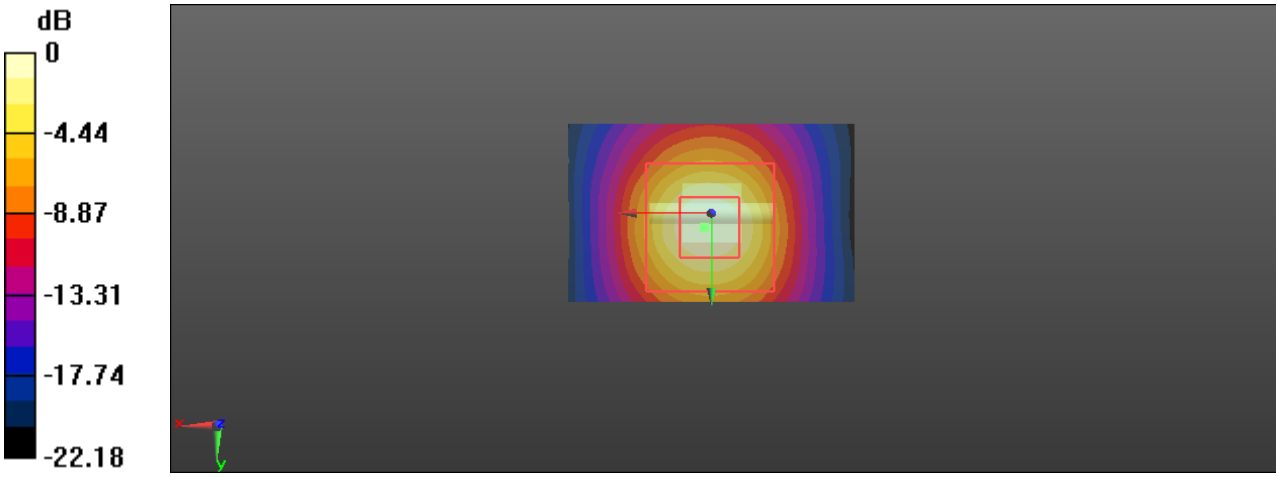

0 dB = 19.0 W/kg = 12.79 dBW/kg

System Performance 5800 MHz Body 2019/04/10

DUT: D5GHzV2; Type: 5800 MHz; Serial: SN:1246

Communication System: CW; Frequency: 5800 MHz;Duty Cycle: 1:1
Medium parameters used: f = 5800 MHz; σ = 5.764 S/m; ε_r = 48.589; ρ = 1000 kg/m^3
Phantom section: Center Section

DASY5 Configuration:

- Probe: EX3DV4 - SN7329; ConvF(4.37, 4.37, 4.37); Calibrated: 2018/9/30;
- Sensor-Surface: 1.4mm (Mechanical Surface Detection)
- Electronics: DAE4 Sn772;Calibrated: 2018/9/28
- Phantom: Triple Flat Phantom 5.1C; Type: QD 000 P51 CA; Serial: 1130
- Measurement SW: DASY52, Version 52.8 (8);

Area Scan (81x51x1): Interpolated grid: dx=0.6000 mm, dy=0.6000 mm
Maximum value of SAR (interpolated) = 19.2 W/kg

Zoom Scan (7x7x7)/Cube 0: Measurement grid: dx=4mm, dy=4mm, dz=1.4mm
Reference Value = 39.08 V/m; Power Drift = 0.07 dB
Peak SAR (extrapolated) = 29.1 W/kg
SAR(1 g) = 7.65 W/kg; SAR(10 g) = 2.17 W/kg
Maximum value of SAR (measured) = 18.9 W/kg

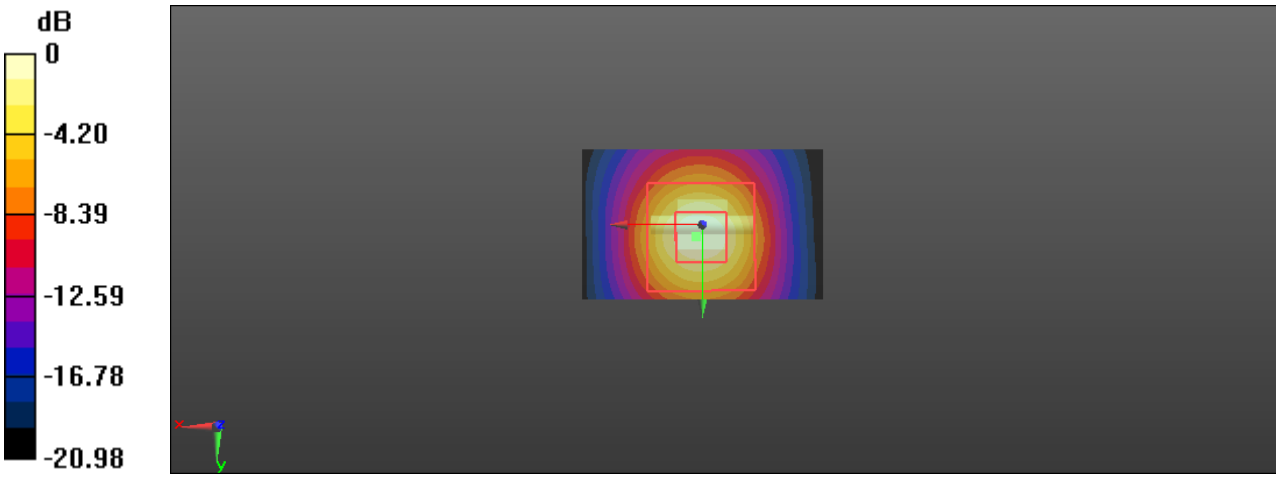

0 dB = 18.9 W/kg = 12.76 dBW/kg

EUT TEST STRATEGY AND METHODOLOGY

Test Positions for Device Operating Next to a Person's Ear

This category includes most wireless handsets with fixed, retractable or internal antennas located toward the top half of the device, with or without a foldout, sliding or similar keypad cover. The handset should have its earpiece located within the upper ¼ of the device, either along the centerline or off-centered, as perceived by its users. This type of handset should be positioned in a normal operating position with the "test device reference point" located along the "vertical centerline" on the front of the device aligned to the "ear reference point". The "test device reference point" should be located at the same level as the center of the earpiece region. The "vertical centerline" should bisect the front surface of the handset at its top and bottom edges. A "ear reference point" is located on the outer surface of the head phantom on each ear spacer. It is located 1.5 cm above the center of the ear canal entrance in the "phantom reference plane" defined by the three lines joining the center of each "ear reference point" (left and right) and the tip of the mouth.

A handset should be initially positioned with the earpiece region pressed against the ear spacer of a head phantom. For the SCC-34/SC-2 head phantom, the device should be positioned parallel to the "N-F" line defined along the base of the ear spacer that contains the "ear reference point". For interim head phantoms, the device should be positioned parallel to the cheek for maximum RF energy coupling. The "test device reference point" is aligned to the "ear reference point" on the head phantom and the "vertical centerline" is aligned to the "phantom reference plane". This is called the "initial ear position". While maintaining these three alignments, the body of the handset is gradually adjusted to each of the following positions for evaluating SAR:

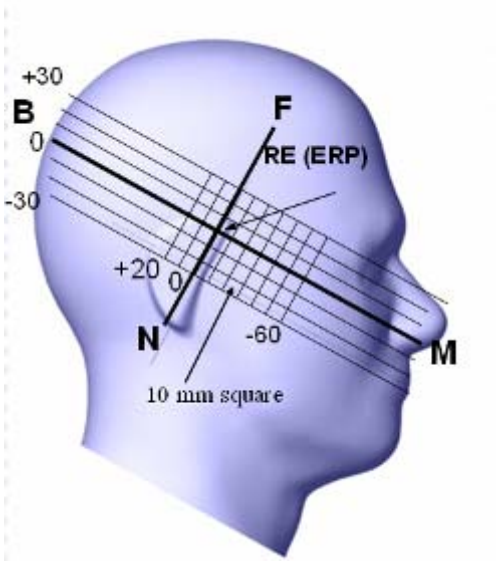

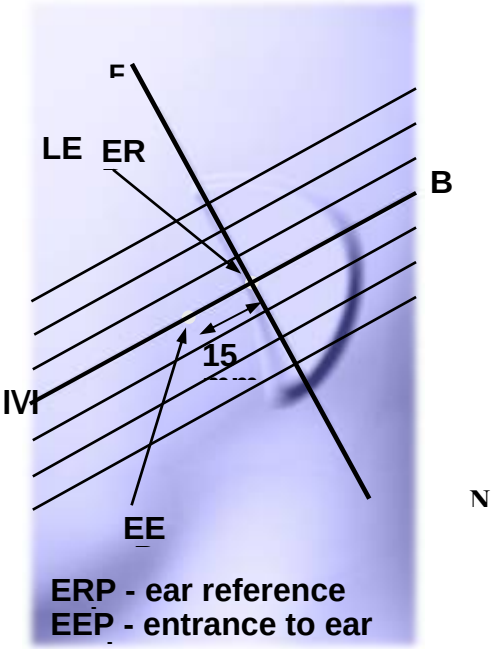

Cheek/Touch Position

The device is brought toward the mouth of the head phantom by pivoting against the "ear reference point" or along the "N-F" line for the SCC-34/SC-2 head phantom.

This test position is established:

When any point on the display, keypad or mouthpiece portions of the handset is in contact with the phantom.

(or) When any portion of a foldout, sliding or similar keypad cover opened to its intended self-adjusting normal use position is in contact with the cheek or mouth of the phantom.

For existing head phantoms – when the handset loses contact with the phantom at the pivoting point, rotation should continue until the device touches the cheek of the phantom or breaks its last contact from the ear spacer.

Cheek /Touch Position

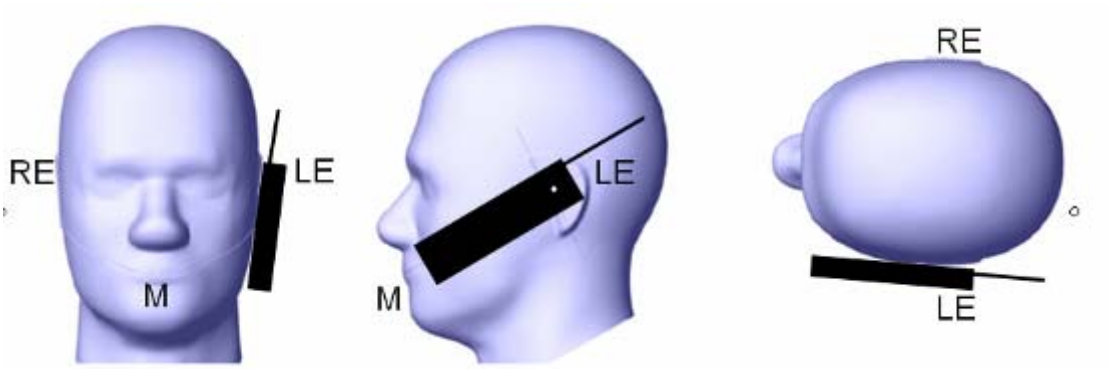

Ear/Tilt Position

With the handset aligned in the "Cheek/Touch Position":

1) If the earpiece of the handset is not in full contact with the phantom's ear spacer (in the "Cheek/Touch position") and the peak SAR location for the "Cheek/Touch" position is located at the ear spacer region or corresponds to the earpiece region of the handset, the device should be returned to the "initial ear position" by rotating it away from the mouth until the earpiece is in full contact with the ear spacer.

2) (otherwise) The handset should be moved (translated) away from the cheek perpendicular to the line passes through both "ear reference points" (note: one of these ear reference points may not physically exist on a split head model) for approximate 2-3 cm. While it is in this position, the device handset is tilted away from the mouth with respect to the "test device reference point" until the inside angle between the vertical centerline on the front surface of the phone and the horizontal line passing through the ear reference point is by 15 80°. After the tilt, it is then moved (translated) back toward the head perpendicular to the line passes through both "ear reference points" until the device touches the phantom or the ear spacer. If the antenna touches the head first, the positioning process should be repeated with a tilt angle less than 15° so that the device and its antenna would touch the phantom simultaneously. This test position may require a device holder or positioner to achieve the translation and tilting with acceptable positioning repeatability.

If a device is also designed to transmit with its keypad cover closed for operating in the head position, such positions should also be considered in the SAR evaluation. The device should be tested on the left and right side of the head phantom in the "Cheek/Touch" and "Ear/Tilt" positions. When applicable, each configuration should be tested with the antenna in its fully extended and fully retracted positions. These test configurations should be tested at the high, middle and low frequency channels of each operating mode; for example, AMPS, CDMA, and TDMA. If the SAR measured at the middle channel for each test configuration (left, right, Cheek/Touch, Tilt/Ear, extended and retracted) is at least 2.0 dB lower than the SAR limit, testing at the high and low channels is optional for such test configuration(s). If the transmission band of the test device is less than 10 MHz, testing at the high and low frequency channels is optional.

Ear /Tilt 15° Position

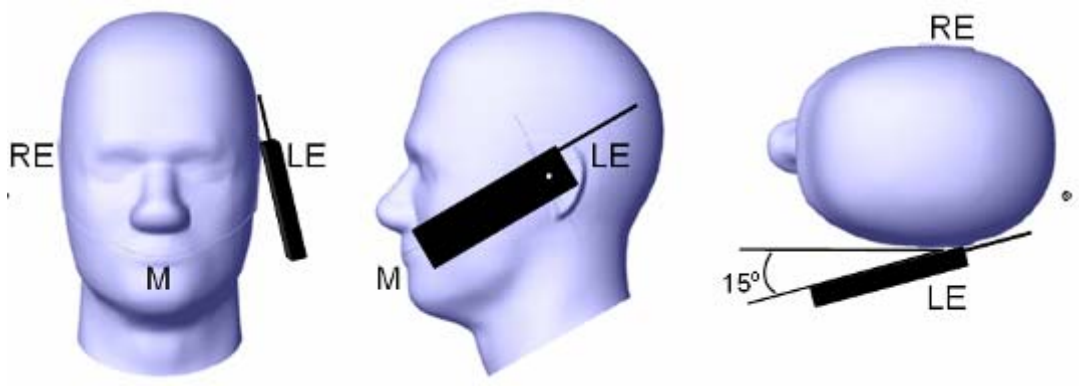

Test positions for body-worn and other configurations

Body-worn operating configurations should be tested with the belt-clips and holsters attached to the device and positioned against a flat phantom in normal use configurations. Devices with a headset output should be tested with a headset connected to the device. When multiple accessories that do not contain metallic components are supplied with the device, the device may be tested with only the accessory that dictates the closest spacing to the body. When multiple accessories that contain metallic components are supplied with the device, the device must be tested with each accessory that contains a unique metallic component. If multiple accessories share an identical metallic component (e.g., the same metallic belt-clip used with different holsters with no other metallic components), only the accessory that dictates the closest spacing to the body must be tested.

Body-worn accessories may not always be supplied or available as options for some devices that are intended to be authorized for body-worn use. A separation distance of 1.5 cm between the back of the device and a flat phantom is recommended for testing body-worn SAR compliance under such circumstances. Other separation distances may be used, but they should not exceed 2.5 cm. In these cases, the device may use body-worn accessories that provide a separation distance greater than that tested for the device provided however that the accessory contains no metallic components.

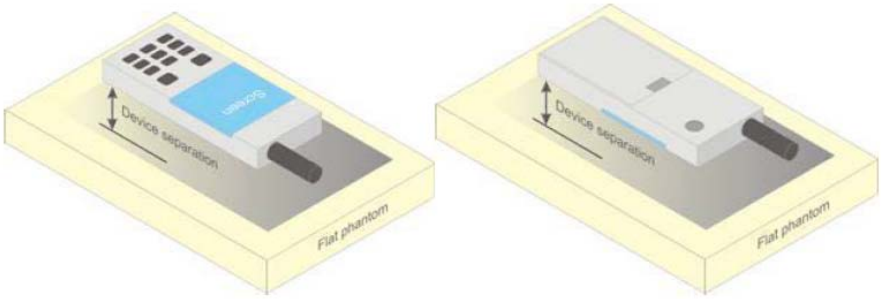

Figure 5 – Test positions for body-worn devices

Test Distance for SAR Evaluation

For Handheld mode(10g Extremity SAR) the EUT(Equipment Under Test) is set directly against the phantom, the test distance is 0mm;
For Close to Body mode(1g Body SAR) the EUT is set 10mm away from the phantom, the test distance is 10mm.

SAR Evaluation Procedure

The evaluation was performed with the following procedure:

Step 1: Measurement of the SAR value at a fixed location above the ear point or central position was used as a reference value for assessing the power drop. The SAR at this point is measured at the start of the test and then again at the end of the testing.

Step 2: The SAR distribution at the exposed side of the head was measured at a distance of 4 mm from the inner surface of the shell. The area covered the entire dimension of the head or radiating structures of the EUT, the horizontal grid spacing was 10 mm x 10 mm, and the SAR distribution was determined by integrated grid of 1.0 mm x 1.0 mm. Based on these data, the area of the maximum absorption was determined by spline interpolation. The first Area Scan covers the entire dimension of the EUT to ensure that the hotspot was correctly identified.

Step 3: Around this point, a volume of 30 mm x 30 mm x 30 mm was assessed by measuring 7x 7 x 7 points. On the basis of this data set, the spatial peak SAR value was evaluated under the following procedure:

1) The data at the surface were extrapolated, since the center of the dipoles is 1.2 mm away from the tip of the probe and the distance between the surface and the lowest measuring point is 1.3 mm. The extrapolation was based on a least square algorithm. A polynomial of the fourth order was calculated through the points in z-axes. This polynomial was then used to evaluate the points between the surface and the probe tip.

2) The maximum interpolated value was searched with a straightforward algorithm. Around this maximum the SAR values averaged over the spatial volumes (1 g or 10 g) were computed by the 3D-Spline interpolation algorithm. The 3D-Spline is composed of three one dimensional splines with the “Not a knot"-condition (in x, y and z-directions). The volume was integrated with the trapezoidal-algorithm. One thousand points (10 x 10 x 10) were interpolated to calculate the averages.

All neighboring volumes were evaluated until no neighboring volume with a higher average value was found.

Step 4: Re-measurement of the SAR value at the same location as in Step 1. If the value changed by more than 5%, the evaluation was repeated.

CONDUCTED OUTPUT POWER MEASUREMENT

Test Procedure

The RF output of the transmitter was connected to the input port of the Power Meter through Connector.

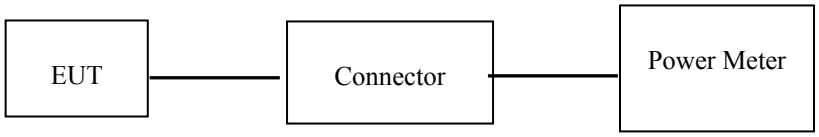

Maximum Target Output Power

Frequency Band	Mode	Maximum Target Output Power (dBm)	
		Chain 1	Chain 2
SDR 5.8GHz	1.4 MHz	20.5	21.5

Test Results:

SDR 5.8G:

Mode	Channel	Frequency (MHz)	Duty Cycle	Max Average Conducted Output Power (dBm)		
				Chain 1	Chain 2	Total
1.4 MHz	Low	5731.5	100%	**20.27**	21.19	23.76
	Middle	5784.12		20.25	21.24	23.78
	High	5846.12		20.22	**21.29**	23.80

SAR EXCLUSION CONSIDERATIONS

Antennas Location:

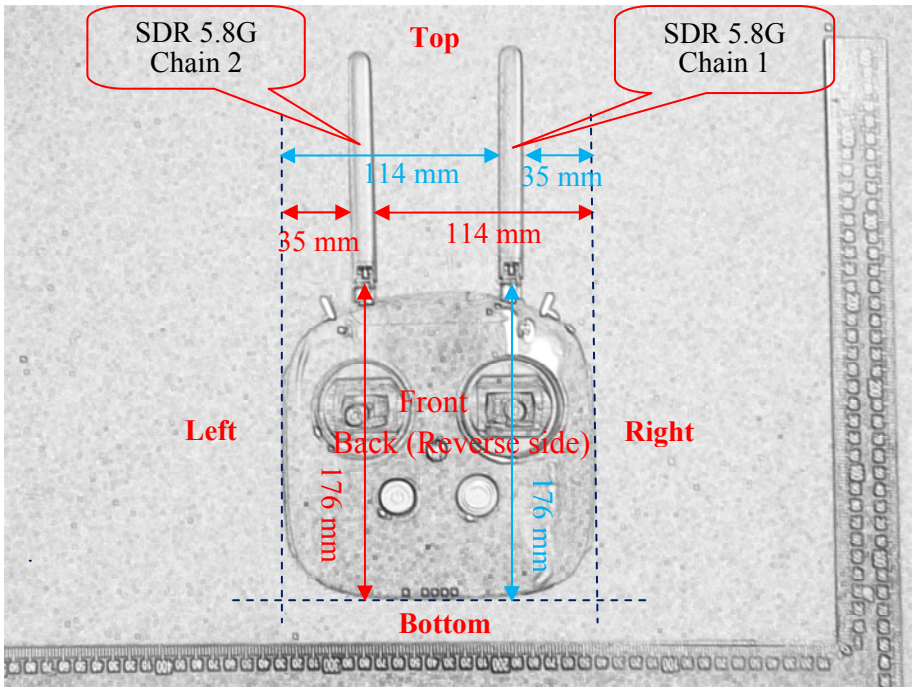

Antenna Distance To Edge

Antenna Distance To Edge(mm)						
Mode	**Left**	**Right**	**Back**	**Front**	**Top**	**Bottom**
SDR 5.8G Chain 1	114	35	36	15	<5	176
SDR 5.8G Chain 2	35	114	36	15	<5	176

SAR test exclusion for the EUT edge considerations(KDB)

SAR Test Exclusion for the EUT Edges Considerations						
Mode	**Left**	**Right**	**Back**	**Front**	**Top**	**Bottom**
SDR 5.8G Chain 1	Exclusion	Exclusion	Exclusion	**Required**	**Required**	Exclusion
SDR 5.8G Chain 2	Exclusion	Exclusion	Exclusion	**Required**	**Required**	Exclusion

Note:

Required: Per KDB 941225 D07-The distance to Edge is less than 25mm, testing is required.
Exclusion: Per KDB 941225 D07-The distance to Edge is more than 25 mm, testing is not required.

SAR test exclusion for the EUT edge consideration(RSS-102)

Mode	Frequency (MHz)	Pavg (dBm)	Antenna Gain(dBi)	Pavg (mW)	Test Exclusion Distance (mm)
SDR 5.8G Chain 1	5784.12	20.5	4.56	320.6	200
SDR 5.8G Chain 2	5784.12	21.5	4.56	403.6	200

Note:

1, When the operating frequency of the device is between two frequencies located in Table 1of **RSS-102 Issue 5 March 2015**, linear interpolation shall be applied for the applicable separation distance.
2, When the **Test Exclusion Distance** is farther than **50mm** and less than 200mm, testing for each edge is required.

SAR test exclusion for the EUT edge considerations Result

Mode	Left Edge	Right Edge	Back Edge	Front Edge	Top Edge	Bottom Edge
SDR 5.8G Chain 1	**Required**	**Required**	**Required**	**Required**	**Required**	**Required**
SDR 5.8G Chain 2	**Required**	**Required**	**Required**	**Required**	**Required**	**Required**

Note:

Required:The distance is less than **Test Exclusion Distance**, the SAR test is required.
Exclusion: The distance is large than **Test Exclusion Distance**, SAR test is not required.

Only when **t**he distance from the antenna to edge is large than **Test Exclusion Distance specified** under **KDB** and **RSS-102 Issue 5 March 2015**, SAR test is not required

SAR MEASUREMENT RESULTS

This page summarizes the results of the performed dosimetric evaluation.

SAR Test Data

Environmental Conditions

Temperature:	21.5-22.3℃	21.3-22.6℃
Relative Humidity:	58%	52%
ATM Pressure:	100.8 kPa	100.5 kPa
Test Date:	2019/04/09	2019/04/10

Testing was performed by Gaochao Gong, Sam Liang, William Ye.

SDR 5.8G Chain 1:

EUT Position	Bandwidth (MHz)	Frequency (MHz)	Max. Meas. Power (dBm)	Max. Rated Power (dBm)	10 g SAR (W/kg), Limit=4.0W/kg				
					Scaled Factor	Meas. SAR	Scaled SAR	Corrected SAR	Plot
Handheld-Left (0mm)	1.4	5731.5	/	/	/	/	/	/	/
		5784.12	20.25	20.5	1.059	<0.01	0.010	0.01	/
		5846.12	/	/	/	/	/	/	/
Handheld-Right (0mm)	1.4	5731.5	/	/	/	/	/	/	/
		5784.12	20.25	20.5	1.059	0.038	0.040	0.04	1#
		5846.12	/	/	/	/	/	/	/
Handheld-Back (0mm) remove hold stick	1.4	5731.5	/	/	/	/	/	/	/
		5784.12	20.25	20.5	1.059	0.062	0.066	0.07	2#
		5846.12	/	/	/	/	/	/	/
Handheld-Back (0mm) with hold stick	1.4	5731.5	/	/	/	/	/	/	/
		5784.12	20.25	20.5	1.059	<0.01	0.010	0.01	/
		5846.12	/	/	/	/	/	/	/
Handheld-Back (0mm) Antenna Fold	1.4	5731.5	/	/	/	/	/	/	/
		5784.12	20.25	20.5	1.059	<0.01	0.010	0.01	/
		5846.12	/	/	/	/	/	/	/
Handheld-Front (0mm)	1.4	5731.5	/	/	/	/	/	/	/
		5784.12	20.25	20.5	1.059	0.089	0.094	0.09	3#
		5846.12	/	/	/	/	/	/	/
Handheld-Top (0mm)	1.4	5731.5	20.27	20.5	1.054	0.922	0.972	**0.97**	**4#**
		5784.12	20.25	20.5	1.059	0.875	0.927	0.93	5#
		5846.12	20.22	20.5	1.067	0.908	0.969	0.97	6#
Handheld-Bottom (0mm)	1.4	5731.5	/	/	/	/	/	/	/
		5784.12	20.25	20.5	1.059	<0.01	0.010	0.01	/
		5846.12	/	/	/	/	/	/	/

Test Date: 2019/04/09

EUT Position	Bandwidth (MHz)	Frequency (MHz)	Max. Meas. Power (dBm)	Max. Rated Power (dBm)	1 g SAR (W/kg), Limit=1.6W/kg				
					Scaled Factor	Meas. SAR	Scaled SAR	Corrected SAR	Plot
Close to Body-Left (10mm)	1.4	5731.5	/	/	/	/	/	/	/
		5784.12	20.25	20.5	1.059	<0.01	0.010	0.01	/
		5846.12	/	/	/	/	/	/	/
Close to Body-Right (10mm)	1.4	5731.5	/	/	/	/	/	/	/
		5784.12	20.25	20.5	1.059	0.047	0.050	0.05	7#
		5846.12	/	/	/	/	/	/	/
Close to Body-Back (10mm) remove hold stick	1.4	5731.5	/	/	/	/	/	/	/
		5784.12	20.25	20.5	1.059	0.102	0.108	0.11	8#
		5846.12	/	/	/	/	/	/	/
Close to Body-Back (10mm) Antenna Fold	1.4	5731.5	/	/	/	/	/	/	/
		5784.12	20.25	20.5	1.059	<0.01	0.010	0.01	/
		5846.12	/	/	/	/	/	/	/
Close to Body-Front (10mm)	1.4	5731.5	/	/	/	/	/	/	/
		5784.12	20.25	20.5	1.059	0.116	0.123	0.12	9#
		5846.12	/	/	/	/	/	/	/
Close to Body-Top (10mm)	1.4	5731.5	20.27	20.5	1.054	0.583	0.614	0.61	10#
		5784.12	20.25	20.5	1.059	0.565	0.598	0.60	11#
		5846.12	20.22	20.5	1.067	0.678	0.723	**0.72**	**12#**
Close to Body-Bottom (10mm)	1.4	5731.5	/	/	/	/	/	/	/
		5784.12	20.25	20.5	1.059	<0.01	0.010	0.01	/
		5846.12	/	/	/	/	/	/	/

Test Date: 2019/04/09

SDR 5.8G Chain 2:

EUT Position	Bandwidth (MHz)	Frequency (MHz)	Max. Meas. Power (dBm)	Max. Rated Power (dBm)	10 g SAR (W/kg), Limit=4.0W/kg				
					Scaled Factor	Meas. SAR	Scaled SAR	Corrected SAR	Plot
Handheld-Left (0mm)	1.4	5731.5	/	/	/	/	/	/	/
		5784.12	21.24	21.5	1.062	0.050	0.053	0.05	13#
		5846.12	/	/	/	/	/	/	/
Handheld-Right (0mm)	1.4	5731.5	/	/	/	/	/	/	/
		5784.12	21.24	21.5	1.062	<0.01	0.010	0.01	/
		5846.12	/	/	/	/	/	/	/
Handheld-Back (0mm) remove hold stick	1.4	5731.5	/	/	/	/	/	/	/
		5784.12	21.24	21.5	1.062	0.063	0.067	0.07	14#
		5846.12	/	/	/	/	/	/	/
Handheld-Back (0mm) with hold stick	1.4	5731.5	/	/	/	/	/	/	/
		5784.12	21.24	21.5	1.062	<0.01	0.010	0.01	/
		5846.12	/	/	/	/	/	/	/
Handheld-Back (0mm) Antenna Fold	1.4	5731.5	/	/	/	/	/	/	/
		5784.12	21.24	21.5	1.062	<0.01	0.010	0.01	/
		5846.12	/	/	/	/	/	/	/
Handheld-Front (0mm)	1.4	5731.5	/	/	/	/	/	/	/
		5784.12	21.24	21.5	1.062	0.093	0.099	0.10	15#
		5846.12	/	/	/	/	/	/	/
Handheld-Top (0mm)	1.4	5731.5	21.19	21.5	1.074	1.53	1.643	**1.65**	**16#**
		5784.12	21.24	21.5	1.062	0.976	1.037	1.04	17#
		5846.12	21.29	21.5	1.05	1.09	1.145	1.15	18#
Handheld-Bottom (0mm)	1.4	5731.5	/	/	/	/	/	/	/
		5784.12	21.24	21.5	1.062	<0.01	0.010	0.01	/
		5846.12	/	/	/	/	/	/	/

Test Date: 2019/04/10

EUT Position	Bandwidth (MHz)	Frequency (MHz)	Max. Meas. Power (dBm)	Max. Rated Power (dBm)	1 g SAR (W/kg), Limit=1.6W/kg				
					Scaled Factor	Meas. SAR	Scaled SAR	Corrected SAR	Plot
Close to Body-Left (10mm)	1.4	5731.5	/	/	/	/	/	/	/
		5784.12	21.24	21.5	1.062	0.103	0.109	0.11	19#
		5846.12	/	/	/	/	/	/	/
Close to Body-Right (10mm)	1.4	5731.5	/	/	/	/	/	/	/
		5784.12	21.24	21.5	1.062	<0.01	0.010	0.01	/
		5846.12	/	/	/	/	/	/	/
Close to Body-Back (10mm) remove hold stick	1.4	5731.5	/	/	/	/	/	/	/
		5784.12	21.24	21.5	1.062	0.129	0.137	0.14	20#
		5846.12	/	/	/	/	/	/	/
Close to Body-Back (10mm) Antenna Fold	1.4	5731.5	/	/	/	/	/	/	/
		5784.12	21.24	21.5	1.062	<0.01	0.010	0.01	/
		5846.12	/	/	/	/	/	/	/
Close to Body-Front (10mm)	1.4	5731.5	/	/	/	/	/	/	/
		5784.12	21.24	21.5	1.062	0.124	0.132	0.13	21#
		5846.12	/	/	/	/	/	/	/
Close to Body-Top (10mm)	1.4	5731.5	21.19	21.5	1.074	0.755	0.811	**0.81**	**22#**
		5784.12	21.24	21.5	1.062	0.527	0.560	0.56	23#
		5846.12	21.29	21.5	1.05	0.598	0.628	0.63	24#
Close to Body-Bottom (10mm)	1.4	5731.5	/	/	/	/	/	/	/
		5784.12	21.24	21.5	1.062	<0.01	0.010	0.01	/
		5846.12	/	/	/	/	/	/	/

Test Date: 2019/04/10

Note:

1. When the SAR value is less than half of the limit, testing for other channels are optional.
2. When SAR or MPE is not measured at the maximum power level allowed for production units, the results must be scaled to the maximum tune-up tolerance limit according to the power applied to the individual channels tested to determine compliance.
3. For modes that peak SAR is too low to evaluate, a SAR value 0.01W/kg is considered as their Scaled SAR.
4. The highest output power bandwidth 1.4MHz was selected as primary mode, for the worst case of the primary mode other bandwidth, 10MHz and 20MHz, were selected to test..
5. According to IEC 62209-2:2010 ,If the correction ΔSAR has a positive sign, the measured SAR results shall not be corrected.

Corrected SAR Evaluation

Annex F
(normative)

SAR correction for deviations of complex permittivity from targets

F.2 SAR correction formula

From [13] and [14], a linear relationship was found between the percent change in SAR (denoted ΔSAR) and the percent change in the permittivity and conductivity from the target values in Table 1 (denoted $\Delta\varepsilon_r$ and $\Delta\sigma$, respectively). This linear relationship agrees with the results of Kuster and Balzano [48] and Bit-Babik et al. [2]. The relationship is given by:

$$\Delta\text{SAR} = c_\varepsilon\, \Delta\varepsilon_r + c_\sigma\, \Delta\sigma \qquad \text{(F.1)}$$

where

$c_\varepsilon = \partial(\Delta\text{SAR})/\partial(\Delta\varepsilon)$ is the coefficients representing the sensitivity of SAR to permittivity where SAR is normalized to output power;

$c_\sigma = \partial(\Delta\text{SAR})/\partial(\Delta\sigma)$ is the coefficients representing the sensitivity of SAR to conductivity, where SAR is normalized to output power.

The values of c_ε and c_σ have a simple relationship with frequency that can be described using polynomial equations. For the 1 g averaged SAR c_ε and c_σ are given by

$$c_\varepsilon = -7{,}854\times10^{-4} f^3 + 9{,}402\times10^{-3} f^2 - 2{,}742\times10^{-2} f - 0{,}202\,6 \qquad \text{(F.2)}$$

$$c_\sigma = 9{,}804\times10^{-3} f^3 - 8{,}661\times10^{-2} f^2 + 2{,}981\times10^{-2} f + 0{,}782\,9 \qquad \text{(F.3)}$$

where

f is the frequency in GHz.

For the 10 g averaged SAR, the variables c_ε and c_σ are given by:

$$c_\varepsilon = 3{,}456\times10^{-3} f^3 - 3{,}531\times10^{-2} f^2 + 7{,}675\times10^{-2} f - 0{,}186\,0 \qquad \text{(F.4)}$$

$$c_\sigma = 4{,}479\times10^{-3} f^3 - 1{,}586\times10^{-2} f^2 - 0{,}197\,2 f + 0{,}771\,7 \qquad \text{(F.5)}$$

Corrected SAR Evaluation Table

Test date:2019/04/09:

Frequency (MHz)	Liquid Type	C ε	△ ε r	C δ	△ δ	△SAR (%)
5731.5	10g Body	-0.255	1.39	-0.036	-3.09	-0.24
5784.12	10g Body	-0.255	1.22	-0.033	-3.78	-0.19
5800	10g Body	-0.254	1.17	-0.032	-4.02	-0.17
5846.12	10g Body	-0.254	0.98	-0.028	-4.23	-0.13
5731.5	1g Body	-0.199	1.39	-0.045	-3.09	-0.14
5784.12	1g Body	-0.199	1.22	-0.045	-3.78	-0.07
5800	1g Body	-0.199	1.17	-0.045	-4.02	-0.05
5846.12	1g Body	-0.198	0.98	-0.044	-4.23	-0.01

Test date:2019/04/10:

Frequency (MHz)	Liquid Type	C ε	△ ε r	C δ	△ δ	△SAR (%)
5731.5	10g Body	-0.255	1.09	-0.036	-3.67	-0.15
5784.12	10g Body	-0.255	0.88	-0.033	-4.16	-0.09
5800	10g Body	-0.254	0.81	-0.032	-3.93	-0.08
5846.12	10g Body	-0.254	0.78	-0.028	-4.05	-0.08
5731.5	1g Body	-0.199	1.09	-0.045	-3.67	-0.05
5784.12	1g Body	-0.199	0.88	-0.045	-4.16	0.01
5800	1g Body	-0.199	0.81	-0.045	-3.93	0.02
5846.12	1g Body	-0.198	0.78	-0.044	-4.05	0.02

$$\Delta SAR = c_\varepsilon \, \Delta\varepsilon_r + c_\sigma \, \Delta\sigma$$

where

f is the frequency in GHz.

Corrected SAR = Measured SAR * ((100 + (ΔSAR x -1)) /100)

SAR Measurement Variability

In accordance with published RF Exposure KDB procedure 865664 D01 SAR measurement 100 MHz to 6 GHz v01. These additional measurements are repeated after the completion of all measurements requiring the same head or body tissue-equivalent medium in a frequency band. The test device should be returned to ambient conditions (normal room temperature) with the battery fully charged before it is re-mounted on the device holder for the repeated measurement(s) to minimize any unexpected variations in the repeated results

1) Repeated measurement is not required when the original highest measured SAR is < 0.80 W/kg; steps 2) through 4) do not apply.
2) When the original highest measured SAR is ≥ 0.80 W/kg, repeat that measurement once.
3) Perform a second repeated measurement only if the ratio of largest to smallest SAR for the original and first repeated measurements is > 1.20 or when the original or repeated measurement is ≥ 1.45 W/kg (~ 10% from the 1-g SAR limit).
4) Perform a third repeated measurement only if the original, first or second repeated measurement is ≥1.5 W/kg and the ratio of largest to smallest SAR for the original, first and second repeated measurements is > 1.20.

Note: The same procedures should be adapted for measurements according to extremity and occupational exposure limits by applying a factor of 2.5 for extremity exposure and a factor of 5 for occupational exposure to the corresponding SAR thresholds.

The Highest Measured SAR Configuration in Each Frequency Band

Handheld SAR

Frequency Band	Freq.(MHz)	EUT Position	Meas. SAR (W/kg)		Largest to Smallest SAR Ratio
			Original	Repeated	
/	/	/	/	/	/

Body SAR

SAR probe calibration point	Frequency Band	Freq.(MHz)	EUT Position	Meas. SAR (W/kg)		Largest to Smallest SAR Ratio
				Original	Repeated	
/	/	/	/	/	/	/

Note:

1. Second Repeated Measurement is not required since the ratio of the largest to smallest SAR for the original and first repeated measurement is not > 1.20.
2. The measured SAR results **do not** have to be scaled to the maximum tune-up tolerance to determine if repeated measurements are required.
3. SAR measurement variability must be assessed for each frequency band, which is determined by the **SAR probe calibration point and tissue-equivalent medium** used for the device measurements..

SAR SIMULTANEOUS TRANSMISSION DESCRIPTION

Simultaneous Transmission:

Description of Simultaneous Transmit Capabilities	
Transmitter Combination	**Simultaneous?**
SDR 5.8G Chain1 + SDR 5.8G Chain2	√

Simultaneous SAR test exclusion considerations:

10g Extremity SAR:

Mode(SAR1+SAR2)	Position	Reported SAR(W/kg)		ΣSAR < 4.0 W/kg
		SAR1	SAR2	
SDR 5.8G Chain1 + SDR 5.8G Chain2	Handheld-Left	0.01	0.05	0.06
	Handheld-Right	0.04	0.01	0.05
	Handheld-Back remove hold stick	0.07	0.07	0.14
	Handheld-Back with hold stick	0.01	0.01	0.02
	Handheld-Back Antenna Fold	0.01	0.01	0.02
	Handheld-Front	0.09	0.10	0.19
	Handheld-Top	0.97	1.65	**2.62**
	Handheld-Bottom	0.01	0.01	0.02

Conclusion:

Sum of SAR: **ΣSAR < 4.0 W/kg**, simultaneous transmission SAR with Volume Scans is **not required**.

1g Body SAR:

Mode(SAR1+SAR2)	Position	Reported SAR(W/kg)		ΣSAR < 1.6 W/kg
		SAR1	SAR2	
SDR 5.8G Chain1 + SDR 5.8G Chain2	Close to Body-Left	0.01	0.11	0.12
	Close to Body-Right	0.05	0.01	0.06
	Close to Body-Back remove hold stick	0.11	0.14	0.25
	Close to Body-Back Antenna Fold	0.01	0.01	0.02
	Close to Body-Front	0.12	0.13	0.25
	Close to Body-Top	0.72	0.81	**1.53**
	Close to Body-Bottom	0.01	0.01	0.02

Conclusion:

Sum of SAR: **ΣSAR < 1.6 W/kg**, simultaneous transmission SAR with Volume Scans is **not required**.

SAR Plots

Please Refer to the Attachment.

APPENDIX A MEASUREMENT UNCERTAINTY

The uncertainty budget has been determined for the measurement system and is given in the following Table.

Measurement uncertainty evaluation for IEEE1528-2013 SAR test

Source of uncertainty	Tolerance/ uncertainty ± %	Probability distribution	Divisor	ci (1 g)	ci (10 g)	Standard uncertainty ± %, (1 g)	Standard uncertainty ± %, (10 g)
Measurement system							
Probe calibration	6.55	N	1	1	1	6.6	6.6
Axial Isotropy	4.7	R	√3	1	1	2.7	2.7
Hemispherical Isotropy	9.6	R	√3	0	0	0.0	0.0
Boundary effect	1.0	R	√3	1	1	0.6	0.6
Linearity	4.7	R	√3	1	1	2.7	2.7
Detection limits	1.0	R	√3	1	1	0.6	0.6
Readout electronics	0.3	N	1	1	1	0.3	0.3
Response time	0.0	R	√3	1	1	0.0	0.0
Integration time	0.0	R	√3	1	1	0.0	0.0
RF ambient conditions – noise	1.0	R	√3	1	1	0.6	0.6
RF ambient conditions–reflections	1.0	R	√3	1	1	0.6	0.6
Probe positioner mech. Restrictions	0.8	R	√3	1	1	0.5	0.5
Probe positioning with respect to phantom shell	6.7	R	√3	1	1	3.9	3.9
Post-processing	2.0	R	√3	1	1	1.2	1.2
Test sample related							
Test sample positioning	2.8	N	1	1	1	2.8	2.8
Device holder uncertainty	6.3	N	1	1	1	6.3	6.3
Drift of output power	5.0	R	√3	1	1	2.9	2.9
Phantom and set-up							
Phantom uncertainty (shape and thickness tolerances)	4.0	R	√3	1	1	2.3	2.3
Liquid conductivity target)	5.0	R	√3	0.64	0.43	1.8	1.2
Liquid conductivity meas.)	2.5	N	1	0.64	0.43	1.6	1.1
Liquid permittivity target)	5.0	R	√3	0.6	0.49	1.7	1.4
Liquid permittivity meas.)	2.5	N	1	0.6	0.49	1.5	1.2
Combined standard uncertainty		RSS				12.2	12.0
Expanded uncertainty 95 % confidence interval)						24.3	23.9

Measurement uncertainty evaluation for IEC62209-2 SAR test

Source of uncertainty	Tolerance/ uncertainty ± %	Probability distribution	Divisor	ci (1 g)	ci (10 g)	Standard uncertainty ± %, (1 g)	Standard uncertainty ± %, (10 g)
Measurement system							
Probe calibration	6.55	N	1	1	1	6.6	6.6
Axial Isotropy	4.7	R	√3	1	1	2.7	2.7
Hemispherical Isotropy	9.6	R	√3	0	0	0.0	0.0
Linearity	4.7	R	√3	1	1	2.7	2.7
Modulation Response	0.0	R	√3	1	1	0.0	0.0
Detection limits	1.0	R	√3	1	1	0.6	0.6
Boundary effect	1.0	R	√3	1	1	0.6	0.6
Readout electronics	0.3	N	1	1	1	0.3	0.3
Response time	0.0	R	√3	1	1	0.0	0.0
Integration time	0.0	R	√3	1	1	0.0	0.0
RF ambient conditions – noise	1.0	R	√3	1	1	0.6	0.6
RF ambient conditions–reflections	1.0	R	√3	1	1	0.6	0.6
Probe positioner mech. Restrictions	0.8	R	√3	1	1	0.5	0.5
Probe positioning with respect to phantom shell	6.7	R	√3	1	1	3.9	3.9
Post-processing	2.0	R	√3	1	1	1.2	1.2
Test sample related							
Device holder Uncertainty	6.3	N	1	1	1	6.3	6.3
Test sample positioning	2.8	N	1	1	1	2.8	2.8
Power scaling	4.5	R	√3	1	1	2.6	2.6
Drift of output power	5.0	R	√3	1	1	2.9	2.9
Phantom and set-up							
Phantom uncertainty (shape and thickness tolerances)	4.0	R	√3	1	1	2.3	2.3
Algorithm for correcting SAR for deviations in permittivity and conductivity	1.9	N	1	1	0.84	1.1	0.9
Liquid conductivity (meas.)	2.5	N	1	0.64	0.43	1.6	1.1
Liquid permittivity (meas.)	2.5	N	1	0.6	0.49	1.5	1.2
Temp. unc. - Conductivity	1.7	R	√3	0.78	0.71	0.8	0.7
Temp. unc. - Permittivity	0.3	R	√3	0.23	0.26	0.0	0.0
Combined standard uncertainty		RSS				12.2	12.1
Expanded uncertainty 95 % confidence interval)						24.5	24.2

APPENDIX B CALIBRATION CERTIFICATES

Please Refer to the Attachment.

APPENDIX C EUT TEST POSITION PHOTOS

Please Refer to the Attachment.

******* END OF REPORT *******