Agras T40

Quick Start Guide

v1.0 2021.11

Aircraft

The AGRAS™ T40 has a truss-style body with pitched arms that can be folded to reduce the body size, making it easier to transport. The integrated spraying system can quickly transform into the spreading configuration with a spreading payload up to 50 kg.

Thanks to the spatial intelligent sensing system with Binocular Vision and Phased Array Digital Radar combined, the T40 can realize fully autonomous 3D continuous obstacle avoidance to ensure flight safety. The 12MP ultra HD FPV camera with a tiltable gimbal can automatically collect HD field images for local offline reconstruction to assist precise field planning. Using the P4 Multispectral and DJI Agras Cloud, prescription maps can be generated in order to perform variable rate fertilization.

The Coaxial Dual Propeller structure brings a strong wind field. Pesticides can penetrate thick canopies to allow thorough spraying. The spraying system is equipped with the brand new Magnetic Drive Impeller Pump, Dual Atomized Centrifugal Sprinklers, and Anti-Drip Centrifugal Valves, using with the weight sensors, to provide real-time liquid level detection and smart supply reminder, improve spraying efficiency, as well as save liquid pesticide.

Core modules adopt potting technology and the aircraft has a protection rating of IPX6K (IEC standard 60529) so that it can be washed directly with water.

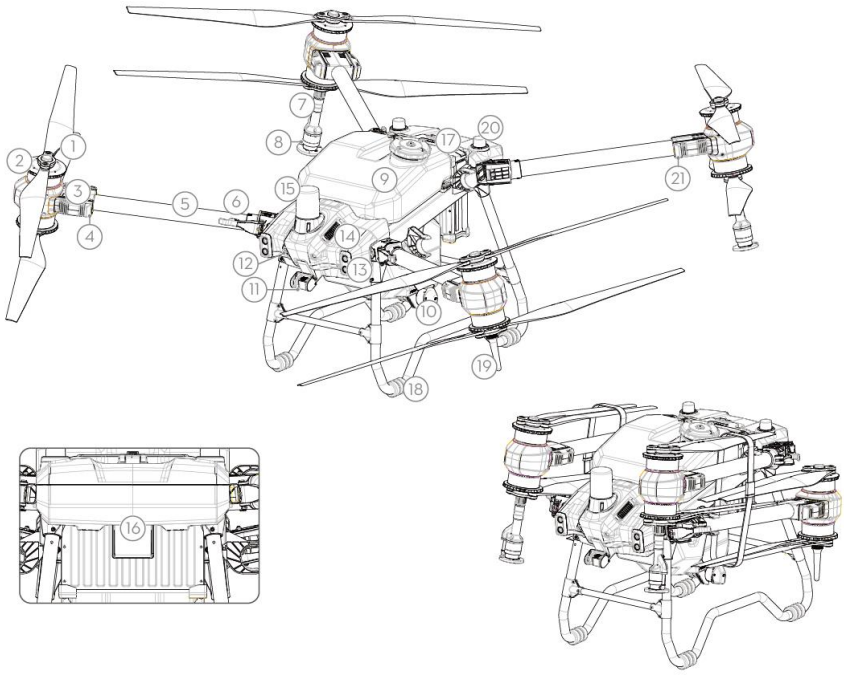

1. Propellers
2. Motors
3. ESCs
4. Aircraft Front Indicators (on two front arms)
5. Frame Arms
6. Folding Detection Sensors (built-in)
7. Spray Lance
8. Sprinklers
9. Spray Tank
10. Delivery Pumps
11. FPV Camera
12. Binocular Vision System
13. Spotlights
14. Heat Sinks
15. Phased Array Omnidirectional Radar
16. Phased Array Downward Rear Radar
17. Intelligent Flight Battery
18. Landing Gear
19. OCUSYNC™ Image Transmission Antennas
20. Onboard D-RTK™ Antennas
21. Aircraft Status Indicators (on two rear arms)

Using the T40

Preparing the Intelligent Flight Battery

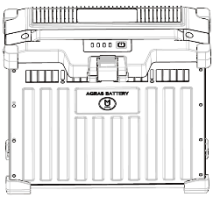

Only use official DJI flight batteries (model: BAX601-30000mAh-52.22V). Check the battery level before flying and charge according to the corresponding manual document.

Preparing the Aircraft

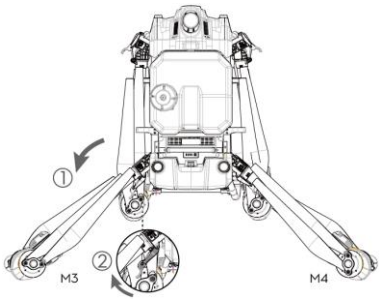

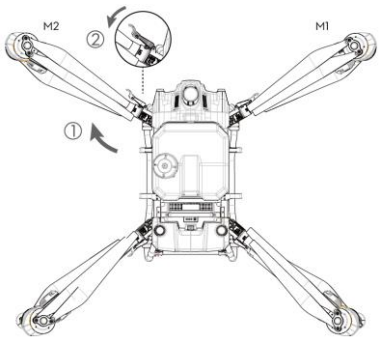

Unfold the M3 and M4 arms, and fasten the two arm locks. Avoid pinching fingers.

Unfold the M1 and M2 arms, and fasten the two arm locks. Avoid pinching fingers.

Unfold the propeller blades.

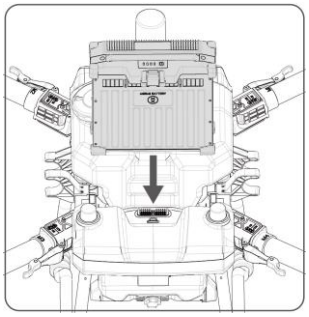

Insert the Intelligent Flight Battery into the aircraft until you hear a click.

⚠	●Make sure that the battery is firmly inserted into the aircraft. Only insert or remove the battery when the aircraft is powered off. ●To remove the battery, press and hold the clamp and lift the battery up. ●Fold the M1 and M2 arms followed by the M3 and M4 arms and make sure that the arms are inserted into the storage clamps on both sides of the aircraft. Otherwise, the arms may be damaged.

Getting Ready for Takeoff

A. Place the aircraft on open, flat ground with the rear of the aircraft facing toward you.

B. Make sure that the propellers are securely mounted, there are no foreign objects in or on the motors and propellers, the propeller blades

and arms are unfolded, and the arm locks are firmly fastened.

C. Make sure that the spray tank and flight battery are firmly in place.

D. Pour liquid into the spray tank, and tighten the cover.

E. Power on the remote controller, make sure that the DJI Agras app is open, and power on the aircraft.

Internet	● When using for the first time, activate the aircraft using the DJI Agras app. A DJI account and internet connection are required.

Calibrating the Flow Meter

Make sure to calibrate the flow meter before using for the first time. Otherwise, the spraying performance may be adversely affected.

① Fill the spray tank with approximately 10 L of water.

② In the app, go to Operation View. Tap , then , swipe down, and tap Calibration on the right of the flow meter calibration section.

③ Tap Start Calibration and calibration will start automatically. The result of the calibration will be displayed in the app when completed.

●Users can proceed once calibration is completed successfully.

●If calibration fails, tap "?"to view and resolve the problem. Afterwards, recalibrate and wait for successful calibration.

Flight

In the app, go to Operation View. Make sure that there is a strong GNSS signal and the system status bar indicates Ready (GNSS) or Ready (RTK).* Otherwise, the aircraft cannot take off.

* RTK positioning is recommended. In the app, go to Operation View, tap , then RTK to enable Aircraft RTK Positioning, and select a method for receiving RTK signals.

Takeoff

Perform a Combination Stick Command (CSC) and push the throttle stick up to take off.

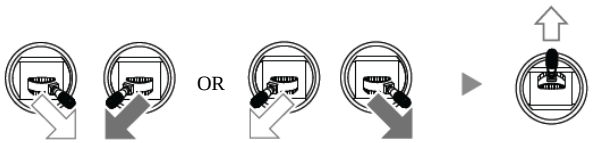

Throttle Stick (left stick in Mode 2)

Landing

To land, pull down on the throttle stick to descend until the aircraft touches the ground. There are two methods to stop the motors.

Method 1: when the aircraft has landed, push and hold the throttle stick down. The motors will stop after three seconds.

Throttle Stick

Method 2: When the aircraft has landed, push the throttle stick down, and perform the same CSC that was used to start the motors. Release both sticks once the motors have stopped. Release both sticks once the motors have stopped.

⚠	● Spinning propellers can be dangerous. Stay away from spinning propellers and motors. DO NOT start the motors in confined spaces or where there are people nearby. ● Maintain control of the remote controller as long as the motors are running. ● DO NOT stop the motors mid-flight unless in an emergency situation where doing so will reduce the risk of damage or injury. ● It is recommended to use Method 1 to stop the motors. When using Method 2 to stop the motors, the aircraft may roll over

	if it is not completely grounded. Use Method 2 with caution. ●After landing, power off the aircraft before turning off the remote controller.

Starting Operations

Users can perform aerial surveying for the operation area in the DJI Agras app. Local HD map can be generated using the offline reconstruction function in the remote controller for field planning and route operations. DJI Agras provides multiple methods to add points. The following descriptions use crosshair as an example.

Aerial Surveying

1. Power on the remote controller and launch the DJI Agras app.

2. Go to Operation View. Tap Mode button on the upper left corner and select Field in the Aerial Surveying panel.

3. Tap or press R1 on the remote controller and select Crosshair in the Add Point list.

4. Drag the map and tap Add to add a point at the location of the crosshair.

5. Tap the field on the map to select it, tap or press R3, and move the slider to take off. The aircraft will perform aerial surveying along the route and land automatically.

6. Wait for the app to complete reconstruction. The reconstruction result, an HD map, will be displayed on the origial map.

After reconstruction, users can tap Field Planning and follow step 3 to 6 in the following section to add points and perform operations. Users can also tap and start a new aerial surveying operation.

Field Planning and Operation Performing

1. In Operation View, tap Mode button on the upper left corner and select Route in Spraying panel.

2. Select a field in the field list.

3. Select the method for adding points and type of point and add edge points, obstacle points, and round obstacles on the map. Tap or press R3 and save.

4. Tap the field to select it and tap or press R3.

5. Set parameters such as margin of field, obstacle boundary safety distance, amount of spray, line spacing, flight speed, and spraying distance. Drag to adjust the flight direction of the route. Then save.

6. Tap or press R3, set the Connection Routing and RTH Altitude and Connection Routing and RTH Speed in Pre-Task Auto Check, and move the slider to start the operation.

	● Only take off in open areas and set an appropriate auto-takeoff height according to the operating environment. ● An operation can be paused by moving the control stick slightly. The aircraft will hover and record the breakpoint. After which, the aircraft can be controlled manually. Pay attention to aircraft safety when returning to a breakpoint. ●In Route Operation mode, the aircraft is able to circumvent obstacles, which is disabled by default and can be enabled in the app. If the function is enabled and the aircraft detects obstacles, the aircraft will slow down and circumvent the obstacles and return to the original flight path. ● Users can set the action the aircraft will perform after the operation is completed in the app.

More Operation Modes and Functions

Refer to the Agras T30 User Manual for more information about the A-B Route, Manual, and Manual Plus Operation modes and on how to use functions such as Smart Supply Reminder, Operation Resumption, System Data Protection, and Empty Tank.

Specifications

Model	3WWDZ-40A
Dimensions	2800mm × 3150mm × 820mm (with arms and blades unfolded) 1580mm × 1930mm × 820mm (with arms unfolded and blades folded) 1150mm × 760mm × 870mm (with arms folded)
Total weight (without batteries)	38 kg
Total weight (without batteries)	50 kg
Maximum take-off weight	101kg
Phased Array Omnidirectional Radar	
Model	RD2484R
Operating Frequency	NCC/FCC/MIC/KCC/CE: 24.05-24.25 GHz
Power Consumption	15 W
Transmitter Power (EIRP)	NCC/MIC/KCC/CE/FCC: <20 dBm
Operating Voltage	DC 15 V
Operating Temperature	0 °to 45 °C (32 °to 113 °F)
Phased Array Downward Rear Radar	
Model	RD2484B
Operating Frequency	NCC/FCC/MIC/KCC/CE: 24.05-24.25 GHz
Power Consumption	4 W
Transmitter Power (EIRP)	<20 dBm (NCC/MIC/KCC/CE/FCC)
Operating Voltage	DC 15 V
Operating Temperature	0 °to 45 °C (32 °to 113 °F)
Flight Parameters	
Operating Frequency	2.400-2.4835 GHz 5.725-5.850 GHz
Transmitter Power (EIRP)	2.4 GHz: <20 dBm (SRRC/CE/MIC/KCC), <33 dBm (FCC) 5.8 GHz: <30 dBm (FCC/SRRC), <14 dBm (CE)
RTK/GNSS Operating Frequency	RTK: GPS L1/L2, GLONASS F1/F2, BeiDou B1/B2, Galileo E1/E5 GNSS: GPS L1, GLONASS F1, Galileo E1
Max Power Consumption	15800 W
Intelligent Flight Battery	
Model	BAX601-300000mAh-52.22V
Capacity	30000 mAh
Voltage	52.22 V

FCC Compliance Notice

Supplier’s Declaration of Conformity

Product name: AGRAS T40

Model Number: 3WWDZ-40A

Responsible Party: DJI Technology, Inc.

Responsible Party Address: 201 S. Victory Blvd., Burbank, CA 91502

Website: www.dji.com

We, DJI Technology, Inc., being the responsible party, declares that the above mentioned model was tested to demonstrate complying with all applicable FCC rules and regulations.

This device complies with Part 15 of the FCC Rules. Operation is subject to the following two conditions: (1) This device may not cause harmful interference, and (2) This device must accept any interference received, including interference that may cause undesired operation.

Any changes or modifications not expressly approved by the party responsible for compliance could void the user's authority to operate the equipment.

This equipment has been tested and found to comply with the limits for a Class B digital device, pursuant to part 15 of the FCC Rules. These limits are designed to provide reasonable protection against harmful interference in a residential installation. This equipment generates, uses and can radiate radio frequency energy and, if not installed and used in accordance with the instructions, may cause harmful interference to radio communications. However, there is no guarantee that interference will not occur in a particular installation. If this equipment does cause harmful interference to radio or television reception, which can be determined by turning the equipment off and on, the user is encouraged to try to correct the interference by one or more of the following measures:

—Reorient or relocate the receiving antenna.

—Increase the separation between the equipment and receiver.

—Connect the equipment into an outlet on a circuit different from that to which the receiver is connected.

—Consult the dealer or an experienced radio/TV technician for help.

RF Exposure Information

The aircraft complies with FCC radiation exposure limits set forth for an uncontrolled environment. In order to avoid the possibility of exceeding the FCC radio frequency exposure limits, human proximity to the antenna shall not be less than 20cm during normal operation. This transmitter must not be co-located or operating in conjunction with any other antenna or transmitter.

This remote controller complies with FCC radiation exposure limits set forth for an uncontrolled environment. End user must follow the specific operating instructions for satisfying RF exposure compliance. This transmitter must not be co-located or operating in conjunction with any other antenna or transmitter.

The portable device is designed to meet the requirements for exposure to radio waves established by the Federal Communications Commission (USA). These requirements set a SAR limit of 1.6 W/kg averaged over one gram of tissue. The highest SAR value reported under this standard during product certification for use when properly worn on the body.

ISED Compliance Notice

This device contains licence-exempt transmitter(s)/receiver(s) that comply with Innovation, Science and Economic Development Canada's licence-exempt RSS(s). Operation is subject to the following two conditions: (1)This device may not cause interference.(2)This device must accept any interference, including interference that may cause undesired operation of the device.

L'émetteur/récepteur exempt de licence contenu dans le présent appareil est conforme aux CNR d'Innovation, Sciences et Développement économique Canada applicables aux appareils radio exempts de licence. L'exploitation est autorisée aux deux conditions suivantes :(1)L'appareil ne doit pas produire de brouillage; (2)L'appareil doit accepter tout brouillage radioélectrique subi, même si le

brouillage est susceptible d'en compromettre le fonctionnement.

This equipment complies with RSS-102 radiation exposure limits set forth for an uncontrolled environment. This equipment should be installed and operated with minimum distance 20cm between the radiator and your body. This transmitter must not be co-located or operating in conjunction with any other antenna or transmitter.

Cet équipement est conforme aux limites d'exposition aux radiations CNR-102 établies pour un environnement non contrôlé. Cet équipement doit être installé et utilisé avec une distance minimale de 20 cm entre le radiateur et votre corps.

This equipment complies with ISED radiation exposure limits set forth for an uncontrolled environment. End user must follow the specific operating instructions for satisfying RF exposure compliance. This transmitter must not be co-located or operating in conjunction with any other antenna or transmitter.The portable device is designed to meet the requirements for exposure to radio waves established by the ISED.

These requirements set a SAR limit of 1.6 W/kg averaged over one gram of tissue. The highest SAR value reported under this standard during product certification for use when properly worn on the body.

Ces exigences un SAR limite de 1,6 W/kg en moyenne pour un gramme de tissu. La valeur SAR la plus élevée signalée en vertu de cette norme lors de la certification de produit à utiliser lorsqu'il est correctement porté sur le corps.

部件名称	有害物质					
	铅 (Pb)	汞 (Hg)	镉 (Cd)	六价铬 (Cr^{+6})	多溴联苯 (PBB)	多溴二苯醚(PBDE)
线路板	×	○	○	○	○	○
外壳	×	○	○	○	○	○
金属部件 (铜合金)	×	○	○	○	○	○
内部线材	×	○	○	○	○	○
其他配件	×	○	○	○	○	○

本表格依据SJ/T 11364 的规定编制。

○：表示该有害物质在该部件所有均质材料中的含量均在GB/T 26572 规定的限量要求以下。

×：表示该有害物质至少在该部件的某一均质材料中的含量超出GB/T 26572 规定的限量要求。(产品符合欧盟ROHS指令环保要求)

KCC Compliance Notice

"해당무선설비는 운용 중 전파혼신 가능성이 있으므로 인명안전과 관련된 서비스는 할 수 없습니다."

"해당 무선설비는 운용 중 전파혼신 가능성이 있음"

EU Compliance Statement: SZ DJI TECHNOLOGY CO., LTD. hereby declares that this device (AGRAS T40) is in compliance with the essential requirements and other relevant provisions of the Directive 2014/53/EU.

A copy of the EU Declaration of Conformity is available online at www.dji.com/euro-compliance

EU contact address: DJI GmbH, Industriestrasse 12, 97618, Niederlauer, Germany

GB Compliance Statement: SZ DJI TECHNOLOGY CO., LTD. hereby declares that this device (AGRAS T40) is in compliance with the essential requirements and other relevant provisions of Radio Equipment Regulations 2017.

A copy of the GB Declaration of Conformity is available online at www.dji.com/euro-compliance

Declaración de cumplimiento UE: SZ DJI TECHNOLOGY CO., LTD. por la presente declara que este dispositivo (AGRAS T40) cumple los requisitos básicos y el resto de provisiones relevantes de la Directiva 2014/53/EU.

Hay disponible online una copia de la Declaración de conformidad UE en www.dji.com/euro-compliance

Dirección de contacto de la UE: DJI GmbH, Industriestrasse 12, 97618, Niederlauer, Germany

EU-verklaring van overeenstemming: SZ DJI TECHNOLOGY CO., LTD. verklaart hierbij dat dit apparaat voldoet aan de essentiële vereisten en andere relevante bepalingen van Richtlijn 2014/53/EU.

De EU-verklaring van overeenstemming is online beschikbaar op www.dji.com/euro-compliance

Contactadres EU: DJI GmbH, Industriestrasse 12, 97618, Niederlauer, Germany

Declaração de conformidade da UE: A SZ DJI TECHNOLOGY CO., LTD. declara, através deste documento, que este dispositivo está em conformidade com os requisitos essenciais e outras disposições relevantes da Diretiva 2014/53/EU.

Existe uma cópia da Declaração de conformidade da UE disponível online em www.dji.com/euro-compliance

Endereço de contacto na UE: DJI GmbH, Industriestrasse 12, 97618, Niederlauer, Germany

Dichiarazione di conformità UE: SZ DJI TECHNOLOGY CO., LTD. dichiara che il presente dispositivo è conforme ai requisiti essenziali e alle altre disposizioni rilevanti della direttiva 2014/53/EU.

Una copia della dichiarazione di conformità UE è disponibile online all'indirizzo Web www.dji.com/euro-compliance

Indirizzo di contatto UE: DJI GmbH, Industriestrasse 12, 97618, Niederlauer, Germany

Déclaration de conformité UE : Par la présente, SZ DJI TECHNOLOGY CO., LTD déclare que cet appareil est conforme aux principales exigences et autres clauses pertinentes de la directive européenne 2014/53/EU.

Une copie de la déclaration de conformité UE est disponible sur le site www.dji.com/euro-compliance

Adresse de contact pour l'UE : DJI GmbH, Industriestrasse 12, 97618, Niederlauer, Germany

PRÉCAUTIONS D'USAGE DE L'APPAREIL

Respect des restrictions d'usage spécifques à certains lieux (hôpitaux, avions, stations-service, établissements scolaires…).

Précautions à prendre par les porteurs d'implants électroniques (stimulateurs cardiaques, pompes à insuline, neurostimulateurs…) concernant notamment la distance entre l'équipement radioélectrique et l'implant (15 centimètres dans le cas des sources d'exposition les

plus fortes comme les téléphones mobiles).

Eloigner les équipements radioélectriques du ventre des femmes enceintes.

Eloigner les équipements radioélectriques du bas-ventre des adolescents.

Le débit d'absorption spécifque (DAS) local quantife l'exposition de l'utilisateur aux ondes électromagnétiques de l'équipement concerné.

Le DAS maximal autorisé est de 2 W/ kg pour la tête et le tronc et de 4 W/ kg pour les membres.

La ou les valeurs du débit d'absorption spécifque des RM700：

DAS tronc: 1.316 W/ kg

DAS membres: 1.316 W/ kg

EU-Compliance: Hiermit erklärt SZ DJI TECHNOLOGY CO., LTD., dass dieses Gerät den wesentlichen Anforderungen und anderen einschlägigen Bestimmungen der EU-Richtlinie 2014/53/EU entspricht.

Eine Kopie der EU-Konformitätserklärung finden Sie online auf www.dji.com/euro-compliance

Kontaktadresse innerhalb der EU: DJI GmbH, Industriestrasse 12, 97618, Niederlauer, Germany

Декларация за съответствие на ЕС: SZ DJI TECHNOLOGY CO., LTD. декларира, че това устройство отговаря на основните изисквания и другите приложими разпоредби на Директива 2014/53/ЕС.

Копие от Декларацията за съответствие на ЕС ще намерите онлайн на адрес www.dji.com/euro-compliance

Адрес за контакт за ЕС: DJI GmbH, Industriestrasse 12, 97618, Niederlauer, Германия

Prohlášení o shodě pro EU: Společnost SZ DJI TECHNOLOGY CO., LTD. tímto prohlašuje, že tohle zařízení vyhovuje základním požadavkům a dalším příslušným ustanovením směrnice 2014/53/EU.

Kopie prohlášení o shodě pro EU je k dispozici on-line na webu www.dji.com/euro-compliance

Kontaktní adresa v EU: DJI GmbH, Industriestrasse 12, 97618, Niederlauer, Německo

EU-overensstemmelseserklæring: SZ DJI TECHNOLOGY CO., LTD. erklærer hermed, at denne enhed er i overensstemmelse med de væsentlige krav og andre relevante bestemmelser i direktiv 2014/53/EU.

Der er en kopi af EU-overensstemmelseserklæringen tilgængelig online på www.dji.com/euro-compliance

EU-kontaktadresse: DJI GmbH, Industriestrasse 12, 97618, Niederlauer, Tyskland

Δήλωση Συμμόρφωσης ΕΕ: Η SZ DJI TECHNOLOGY CO., LTD. δια του παρόντος δηλώνει ότι η συσκευή αυτή συμμορφώνεται με τις βασικές απαιτήσεις και άλλες σχετικές διατάξεις της Οδηγίας 2014/53/ΕΕ.

Αντίγραφο της Δήλωσης Συμμόρφωσης ΕΕ διατίθεται ηλεκτρονικά στη διεύθυνση www.dji.com/euro-compliance

Διεύθυνση επικοινωνίας στην ΕΕ: DJI GmbH, Industriestrasse 12, 97618, Niederlauer, Γερμανία

ELi vastavuskinnitus Käesolevaga teatab SZ DJI TECHNOLOGY CO., LTD., et see seade on kooskõlas direktiivi 2014/53/EL oluliste nõuete ja muude asjakohaste sätetega.

ELi vastavusdeklaratsiooni koopia on kättesaadav veebis aadressil www.dji.com/euro-compliance

Kontaktaadress ELis: DJI GmbH, Industriestrasse 12, 97618, Niederlauer, Saksamaa

Pranešimas dėl atitikties ES reikalavimams Bendrovė „SZ DJI TECHNOLOGY CO., LTD.“ tvirtina, kad šis prietaisas atitinka pagrindinius 2014/53/ES direktyvos reikalavimus ir kitas susijusias nuostatas.

ES atitikties deklaracijos kopiją galite rasti adresu www.dji.com/euro-compliance

ES kontaktinis adresas: „DJI GmbH“, Industriestrasse 12, 97618, Niederlauer, Germany (Vokietija)

ES atbilstības paziņojums: SZ DJI TECHNOLOGY CO., LTD. ar šo apliecina, ka šī ierīce atbilst direktīvas 2014/53/ES pamatprasībām un pārējiem būtiskiem nosacījumiem.

ES atbilstības deklarācijas kopija pieejama tiešsaistē vietnē www.dji.com/euro-compliance

ES kontaktadrese: DJI GmbH, Industriestrasse 12, 97618, Niederlauer, Vācija

EU:n vaatimustenmukaisuusvakuutus: SZ DJI TECHNOLOGY CO., LTD. ilmoittaa täten, että tämä laite on direktiivin 2014/53/EU olennaisten vaatimusten ja sen muiden asiaankuuluvien ehtojen mukainen.

Kopio EU:n vaatimustenmukaisuusvakuutuksesta on saatavana verkossa osoitteessa www.dji.com/euro-compliance

Yhteystiedot EU:ssa: DJI GmbH, Industriestrasse 12, 97618, Niederlauer, Germany

RÁITEAS Comhlíonta an AE: Dearbhaíonn SZ DJI TECHNOLOGY CO., LTD. leis seo go bhfuil an gléas seo de réir na gceanglas riachtanach agus na bhforálacha ábhartha eile sa Treoir 2014/53/AE.

Tá coip de Dhearbhú Comhréireachta an AE ar fáil ar líne ag www.dji.com/euro-compliance

Seoladh teagmhála san AE: DJI GmbH, Industriestrasse 12, 97618, Niederlauer, Germany

Dikjarazzjoni ta' Konformità tal-UE: SZ DJI TECHNOLOGY CO., LTD. hawnhekk tiddikjara li dan l-apparat huwa konformi mar-rekwiżiti essenzjali u ma' dispożizzjonijiet relevanti oħra tad-Direttiva 2014/53/UE.

Kopja tad-Dikjarazzjoni ta' Konformità tal-UE hija disponibbli onlajn fis-sit www.dji.com/euro-compliance

Indirizz ta' kuntatt tal-UE: DJI GmbH, Industriestrasse 12, 97618, Niederlauer, il-Ġermanja

Declarația UE de conformitate: Prin prezenta, SZ DJI TECHNOLOGY CO., LTD. declară faptul că acest dispozitiv este conform cu cerințele esențiale și celelalte prevederi relevante ale Directivei 2014/53/UE.

Un exemplar al Declarației UE de conformitate este disponibil online, la adresa www.dji.com/euro-compliance

Adresa de contact pentru UE: DJI GmbH, Industriestrasse 12, 97618, Niederlauer, Germania

Izjava EU o skladnosti: Družba SZ DJI TECHNOLOGY CO., LTD. izjavlja, da ta naprava ustreza osnovnim zahtevam in drugim ustreznim določbam Direktive 2014/53/EU.

Kopija izjave EU o skladnosti je na voljo na spletu na www.dji.com/euro-compliance

Kontaktni naslov EU: DJI GmbH, Industriestrasse 12, 97618, Niederlauer, Nemčija

EU Izjava o sukladnosti: Tvrtka SZ DJI TECHNOLOGY CO., LTD. izjavljuje da je ovaj uređaj izrađen u skladu s osnovnim zahtjevima i ostalim relevantnim odredbama Direktive 2014/53/EU.

Kopija EU Izjave o sukladnosti dostupna je na mrežnoj stranici www.dji.com/euro-compliance

Adresa EU kontakta: DJI GmbH, Industriestrasse 12 97618, Niederlauer, Njemačka

Vyhlásenie o zhode EÚ: SZ DJI TECHNOLOGY CO., LTD. týmto vyhlasuje, že toto zariadenie je v zhode so základnými požiadavkami a ďalšími relevantnými ustanoveniami smernice 2014/53/EÚ.

Kópia tohto Vyhlásenia o zhode EÚ je k dispozícii online na www.dji.com/euro-compliance

Kontaktná adresa v EÚ: DJI GmbH, Industriestrasse 12, 97618, Niederlauer, Nemecko

Deklaracja zgodności UE: Firma SZ DJI TECHNOLOGY CO., LTD. niniejszym oświadcza, że przedmiotowe urządzenie jest zgodne z zasadniczymi wymogami i innymi stosownymi postanowieniami dyrektywy 2014/53/UE.

Kopię deklaracji zgodności UE można znaleźć w Internecie na stronie www.dji.com/euro-compliance

Adres do kontaktu w UE: DJI GmbH, Industriestrasse 12, 97618, Niederlauer, Niemcy

EU megfelelőségi nyilatkozat: A SZ DJI TECHNOLOGY CO., LTD. ezúton megerősíti, hogy ez az eszköz megfelel a 2014/53/EU Irányelv alapvető követelményeinek és más vonatkozó rendelkezéseinek.

Az EU megfelelőségi nyilatkozat másolata elérhető a www.dji.com/euro-compliance oldalon

EU kapcsolati cím: DJI GmbH, Industriestrasse 12, 97618, Niederlauer, Németország

EU-försäkran om efterlevnad: SZ DJI TECHNOLOGY CO., LTD. härmed förklarar att denna enhet uppfyller de väsentliga kraven och andra relevanta bestämmelser i direktivet 2014/53/EU.

En kopia av EU-försäkran om efterlevnad finns att tillgå online på adressen www.dji.com/euro-compliance

Kontaktadress EU: DJI GmbH, Industriestrasse 12, 97618, Niederlauer, Tyskland

Yfirlýsing um fylgni við reglur ESB: SZ DJI TECHNOLOGY CO., LTD. lýsir hér með yfir að þetta tæki hlíti mikilvægum kröfum og öðrum viðeigandi ákvæðum tilskipunar 2014/53/ESB.

Nálgast má eintak af ESB-samræmisyfirlýsingunni á netinu á www.dji.com/euro-compliance

Heimilisfang ESB-tengiliðar: DJI GmbH, Industriestrasse 12, 97618, Niederlauer, Germany

AB Uygunluk Beyanı: SZ DJI TECHNOLOGY CO., LTD. bu belge ile bu cihazın temel gerekliliklere ve 2014/53/EU sayılı Direktifin diğer ilgili hükümlerine uygun olduğunu beyan eder.

AB Uygunluk Beyanının bir kopyasına www.dji.com/euro-compliance adresinden çevrim içi olarak ulaşılabilir

AB için iletişim adresi: DJI GmbH, Industriestrasse 12, 97618, Niederlauer, Almanya

CAUTION: RISK OF EXPLOSION IF BATTERY IS REPLACED BY AN INCORRECT TYPE. DISPOSE OF USED BATTERIES ACCORDING TO THE INSTRUCTIONS

Environmentally friendly disposal

Old electrical appliances must not be disposed of together with the residual waste, but have to be disposed of arately. The disposal at the communal collecting point via private persons is for free. The owner of old appliances is ɔonsible to bring the appliances to these collecting points or to similar collection points. With this little personal effort, contribute to recycle valuable raw materials and the treatment of toxic substances.

Umweltfreundliche Entsorgung

Elektro-Altgeräte dürfen nicht mit gewöhnlichem Abfall entsorgt werden und müssen separat entsorgt werden. Die Entsorgung an kommunalen Sammelstellen ist für Privatpersonen kostenlos. Die Eigentümer der Altgeräte sind für den Transport zu den Sammelstellen verantwortlich. Durch diesen geringen Aufwand können Sie zur Wiederverwertung von wertvollen Rohmaterialien beitragen und dafür sorgen, dass umweltschädliche und giftige Substanzen ordnungsgemäß unschädlich gemacht werden.

Tratamiento de residuos responsable con el medio ambiente

Los aparatos eléctricos viejos no pueden desecharse junto con los residuos orgánicos, sino que deben ser desechados por separado. Existen puntos limpios donde los ciudadanos pueden dejar estos aparatos gratis. El propietario de los aparatos viejos es responsable de llevarlos a estos puntos limpios o similares puntos de recogida. Con este pequeño esfuerzo estás contribuyendo a reciclar valiosas materias primas y al tratamiento de residuos tóxicos.

Mise au rebut écologique

Les appareils électriques usagés ne doivent pas être éliminés avec les déchets résiduels. Ils doivent être éliminés séparément. La mise au rebut au point de collecte municipal par l'intermédiaire de particuliers est gratuite. Il incombe au propriétaire des appareils usagés de les apporter à ces points de collecte ou à des points de collecte similaires. Avec ce petit effort personnel, vous contribuez au recyclage de matières premières précieuses et au traitement des substances toxiques.

Smaltimento ecologico

I vecchi dispositivi elettrici non devono essere smaltiti insieme ai rifiuti residui, ma devono essere smaltiti separatamente. Lo smaltimento da parte di soggetti privati presso i punti di raccolta pubblici è gratis. È responsabilità del proprietario dei vecchi dispositivi portarli presso tali punti di raccolta o punti di raccolta analoghi. Grazie a questo piccolo impegno personale contribuirete al riciclo di materie prime preziose e al corretto trattamento di sostanze tossiche.

Milieuvriendelijk afvoeren

Oude elektrische apparaten mogen niet worden weggegooid samen met het restafval, maar moeten afzonderlijk worden afgevoerd. Afvoeren via het gemeentelijke inzamelpunt is gratis voor particulieren. De eigenaar van oude toestellen is verantwoordelijk voor het inleveren van de apparaten op deze of vergelijkbare inzamelpunten. Met deze kleine persoonlijke inspanning lever je een bijdrage aan de recycling van waardevolle grondstoffen en de verwerking van giftige stoffen.

Eliminação ecológica

Os aparelhos elétricos antigos não podem ser eliminados juntamente com os materiais residuais. Têm de ser eliminados separadamente. A eliminação no ponto de recolha público através de entidades particulares é gratuita. É da responsabilidade do proprietário de aparelhos antigos levá-los a estes pontos de recolha ou a pontos de recolha semelhantes. Com este pequeno esforço pessoal, contribui para a reciclagem de matérias-primas úteis e para o tratamento de substâncias tóxicas.

Изхвърляне с оглед опазване на околната среда

Старите електрически уреди не трябва да се изхвърлят заедно с битовите отпадъци, а отделно. Изхвърлянето в общинския пункт за събиране на отпадъци от частни лица е безплатно. Собственикът на старите уреди е отговорен за пренасянето на уредите до тези или до подобни събирателни пунктове. С това малко собствено усилие допринасяте за рециклирането на ценни суровини и за обработката на токсични вещества.

Ekologicky šetrná likvidace

Stará elektrická zařízení nesmějí být likvidována spolu se zbytkovým odpadem, ale musí být likvidována samostatně. Likvidace na komunálních sběrných místech prostřednictvím soukromých osob je bezplatná. Vlastník starých zařízení odpovídá za to, že je donese do těchto sběrných míst nebo na obdobná sběrná místa. Tímto můžete přispět k recyklaci hodnotných surovin a zpracování toxických látek.

Miljøvenlig bortskaffelse

Gamle elektriske apparater må ikke bortskaffes sammen med restaffald, men skal bortskaffes separat. Bortskaffelse på et fælles indsamlingssted er gratis for privatpersoner. Ejere af gamle apparater er ansvarlige for at bringe apparater hen til disse indsamlingssteder eller til lignende indsamlingssteder. Med denne lille personlige indsats bidrager du til genanvendelse af værdifulde råvarer og behandlingen af giftige stoffer.

Απόρριψη φιλική προς το περιβάλλον

Οι παλιές ηλεκτρικές συσκευές δεν πρέπει να απορρίπτονται μαζί με τα υπολειμματικά απόβλητα, αλλά ξεχωριστά. Η απόρριψη στο δημοτικό σημείο συλλογής μέσω ιδιωτών γίνεται χωρίς χρέωση. Ο κάτοχος παλιών συσκευών είναι υπεύθυνος για τη μεταφορά των συσκευών σε αυτά ή παρόμοια σημεία συλλογής. Μέσω της ατομικής σας προσπάθειας, συμβάλλετε στην ανακύκλωση πολύτιμων πρώτων υλών και την επεξεργασία των τοξικών ουσιών.

Keskkonnasäästlik kasutuselt kõrvaldamine

Vanu elektriseadmeid ei tohi ära visata koos olmejäätmetega, vaid tuleb koguda ja kasutuselt kõrvaldada eraldi. Kohaliku omavalitsuse elektroonikaromude kogumispunktis on äraandmine eraisikutele tasuta. Vanade seadmete sellistesse või sarnastesse kogumispunktidesse toimetamise eest vastutavad seadmete omanikud. Selle väikese isikliku panusega aitate kaasa väärtusliku toorme

ringlussevõtule ja mürgiste ainete töötlemisele.

Utilizavimas nekenkiant aplinkai

Senų elektrinių prietaisų negalima išmesti kartu su buitinėmis atliekomis; juos būtina utilizuoti atskirai. Tokių prietaisų utilizavimas per komunalinius atliekų surinkimo punktus yra nemokamas. Elektrinių prietaisų savininkai utilizuojamus prietaisus privalo priduoti į atitinkamus arba analogiškus atliekų surinkimo punktus. Tokiu būdu, įdėdami nedaug pastangų, prisidėsite prie vertingų medžiagų perdirbimo ir aplinkos apsaugojimo nuo toksinių medžiagų.

Videi draudzīga atkritumu likvidēšana

Vecas elektriskās ierīces nedrīkst likvidēt kopā ar pārējiem atkritumiem, bet tās jālikvidē atsevišķi. Privātpersonām atkritumu likvidēšana komunālajā savākšanas punktā ir bez maksas. Veco ierīču īpašnieks ir atbildīgs par ierīču nogādāšanu šajos savākšanas punktos vai līdzīgos savākšanas punktos. Ar šīm nelielām personiskajām pūlēm jūs veicināt vērtīgu izejmateriālu pārstrādi un toksisko vielu apstrādi.

Hävittäminen ympäristöystävällisesti

Vanhoja sähkölaitteita ei saa hävittää kaatopaikkajätteen mukana, vaan ne on hävitettävä erikseen. Kunnalliseen keräyspisteeseen vieminen on yksityishenkilölle ilmaista. Vanhojen laitteiden omistaja vastaa laitteiden toimittamisesta kyseisiin keräyspisteisiin tai vastaaviin. Tällä vähäisellä henkilökohtaisella vaivalla edistät omalta osaltasi arvokkaiden raaka-aineiden kierrätystä ja myrkyllisten aineiden käsittelyä.

Diúscairt neamhdhíobhálach don chomhshaol

Níor cheart seanghléasanna leictreacha a dhiúscairt leis an dramhaíl iarmharach, ach caithfear iad a chur de láimh astu féin. Tá an diúscairt ag an ionad bailiúcháin pobail ag daoine príobháideacha saor in aisce. Tá freagracht ar úinéir seanghléasanna na gléasanna a thabhairt chuig na hionaid bhailiúcháin sin nó chuig ionaid bhailiúcháin den chineál céanna. Le hiarracht bheag phearsanta mar sin, cuidíonn tú le hamhábhair luachmhara a athchúrsáil agus le substaintí tocsaineacha a chóireáil

Rimi li jirrispetta l-ambjent

L-apparat elettriku qadim ma għandux jintrema flimkien ma' skart residwu, iżda għandu jintrema b'mod separat. Ir-rimi fil-post tal-ġbir komunali minn persuni privati huwa b'xejn. Is-sit ta' apparat qadim huwa responsabbli biex iġib l-apparat f'dawn il-postijiet tal-ġbir jew f'postijiet tal-ġbir simili. B'dan l-isforz personali żgħir, inti tikkontribwixxi għar-riċiklaġġ ta' materja prima prezzjuża u għat-trattament ta' sustanzi tossiċi.

Eliminarea ecologică

Aparatele electrice vechi nu trebuie aruncate odată cu deșeurile reziduale, ci trebuie eliminate separat. Eliminarea în cadrul punctului de colectare local de către persoane fizice este gratuită. Proprietarii de aparate vechi sunt responsabili pentru transportul acestora la respectivele puncte de colectare sau la alte puncte de colectare similare. Prin acest efort personal nesemnificativ, puteți contribui la reciclarea materiilor prime valoroase și la tratarea substanțelor toxice.

Okolju prijazno odlaganje

Starih električnih aparatov ne smete odvreči skupaj z ostanki odpadkov, temveč ločeno. Odlaganje na komunalnem zbirnem mestu je za fizične osebe brezplačno. Lastnik starih naprav je odgovoren, da jih pripelje do teh ali podobnih zbirnih mest. S tako malo osebnega truda prispevate k recikliranju dragocenih surovin in obdelavi strupenih snovi.

Ekološko odlaganje

Stari električni uređaji ne smiju se odlagati zajedno s kućnim otpadom, već ih treba odlagati odvojeno. Odlaganje na komunalnom

sabirnom mjestu od strane privatnih osoba je besplatno. Vlasnik starih uređaja dužan je donijeti uređaje do tih sabirnih mjesta ili sličnih sabirnih mjesta. Ovim malim osobnim naporom doprinosite recikliranju vrijednih sirovina i pravilnoj obradi otrovnih tvari.

Ekologická likvidácia

Staré elektrospotrebiče sa nesmú likvidovať spolu so zvyškovým odpadom, ale musia sa zlikvidovať samostatne. Likvidácia v komunálnom zbernom mieste prostredníctvom súkromných osôb je bezplatná. Majiteľ starých spotrebičov je zodpovedný za prinesenie spotrebičov na tieto zberné miesta alebo na podobné zberné miesta. Týmto malým osobným úsilím prispievate k recyklovaniu cenných surovín a spracovaniu toxických látok

Utylizacja przyjazna dla środowiska

Nie można usuwać starych urządzeń elektrycznych wraz z pozostałymi odpadami. Wymagają one oddzielnej utylizacji. Utylizacja przez osoby prywatne w punkcie zbiórki odpadów komunalnych jest darmowa. Właściciel starych urządzeń jest odpowiedzialny za dostarczenie ich do takich lub podobnych punktów zbiórki. Zadając sobie tak niewielki trud, przyczyniasz się do recyklingu cennych surowców i odpowiedniego postępowania z substancjami toksycznymi.

Környezetbarát hulladékkezelés

A régi elektromos készülékeket nem szabad a nem szelektíven gyűjtött hulladékkal együtt kidobni, hanem a hulladékkezelésüket elkülönítve kell végezni A közösségi gyűjtőpontokon a magánszemélyek ingyenesen leadhatják ezeket. A régi készülékek tulajdonosai felelnek azért, hogy e készülékeket ezekre a gyűjtőpontokra, vagy más gyűjtőpontokra elhozzák. Ezzel a kis személyes erőfeszítéssel Ön is hozzájárul az értékes nyersanyagok újrahasznosításához és a mérgező anyagok kezeléséhez.

Miljövänlig hantering av avfall

Gamla elektriska apparater får inte kasseras tillsammans med restavfallet utan måste kasseras separat. Kassering på den lokala insamlingsplatsen för privatpersoner är gratis. Ägaren av gamla apparater ansvarar för att ta apparaterna till dessa insamlingsplatser eller till liknande insamlingsplatser. Med denna lilla personliga insats bidrar du till återvinning av värdefulla råvaror och hantering av giftiga ämnen.

Umhverfisvæn förgun

Ekki má farga gömlum raftækjum með úrgangsleifum, heldur þarf að farga þeim sérstaklega. Förgun á almennum söfnunarstöðum er ókeypis fyrir einstaklinga. Eigandi gamalla tækja ber ábyrgð á að koma með tækin á þessa söfnunarstaði eða á svipaða söfnunarstaði. Með þessu litla persónulega átaki stuðlar þú að endurvinnslu verðmætra hráefna og meðferð eitrurefna.

Çevre dostu bertaraf

Eski elektrikli cihazlar, diğer atıklarla birlikte bertaraf edilmemeli, ayrıca atılmalıdır. Özel kişiler aracılığıyla genel toplama noktasına bertaraf işlemi ücretsiz olarak yapılmaktadır. Eski cihazların sahibi, cihazları bu toplama noktalarına veya benzer toplama noktalarına getirmekten sorumludur. Bu az miktardaki kişisel çabayla, değerli ham maddelerin geri dönüştürülmesine ve toksik maddelerin işleme alınmasına katkıda bulunmuş olursunuz.

Thailand Warning message

เครื่องโทรคมนาคมและอุปกรณ์นี้ มีความสอดคล้องตามข้อกำหนดของ กทช.

Mexico Warning message

“La operación de este equipo está sujeta a las siguientes dos condiciones: (1) es posible que este equipo o dispositivo no cause interferencia perjudicial y (2) este equipo o dispositivo debe aceptar cualquier interferencia, incluyendo la que pueda causar su operación no deseada.”

Brazil Warning message

Informações sobre Regulamentação

Estes equipamentos estão certificados e homologados pela ANATEL.

Para maiores informações, consulte o site da ANATEL: www.anatel.gov.br.

Este equipamento não tem direito à proteção contra interferência prejudicial e não pode causar interferência em sistemas devidamente autorizados.

Este produto está homologado pela Anatel de acordo com os procedimentos regulamentados para avaliação da conformidade de produtos para telecomunicações e atende aos requisitos técnicos aplicados, incluindo os limites de exposição da Taxa de Absorção Específica referente a campos elétricos, magnéticos e eletromagnéticos de radiofrequência.