PHANTOM 3 Advanced

User Manual V1.0

2015.03

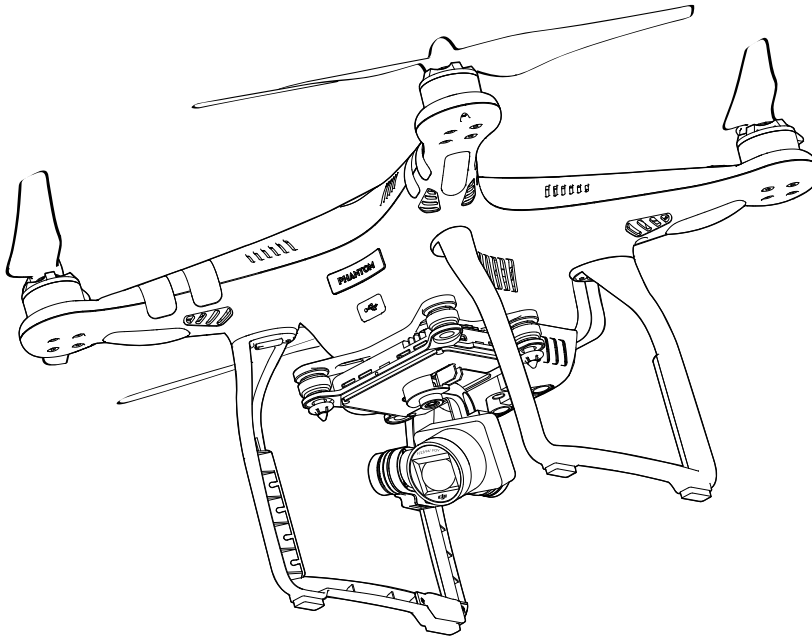

Using this manual

Legends

Warning Important Hints and Tips Reference

Read Before the First Flight

Read the follow documents before using the Phantom 3 Advanced for the first time.

1. Disclaimer
2. Phantom 3 Advanced Quick Start Guide
3. Phantom 3 Advanced User Manual
4. In the Box
5. Safety Guidelines
6. Intelligent Flight Battery Safety Guidelines

It is recommended to watch all the tutorial videos on DJI official website and read the Disclaimer before your first flight. Prepare for your first flight by using the Phantom 3 Advanced Quick Start Guide. Refer to the user manual for more detailed information.

Video Tutorials

Please watch the tutorial video below to learn how to use Phantom 3 Advanced safely:

http://www.dji.com/product/phantom-3-advanced/video

Download the DJI Pilot app

Download and install the DJI Pilot app before use. Scan the QR code below to download.

For Android version of the DJI Pilot app is compatible with Android 4.1.2 or later.
For iOS version of the DJI Pilot app is compatible with iOS 8.0 or later.

 © 2015 DJI. All Rights Reserved.

Contents

Using this manual

Legends 2
Before Flight 2
Watch the video tutorials 2
Download the DJI Pilot app 2

Product Profile

Introduction 6
Feature Highlights 6
Assemble the Aircraft 7
Aircraft Diagram 8
Remote Controller Diagram 9

Aircraft

Flight Controller 12
Flight Mode 12
Flight Status Indicator 12
Return to Home (RTH) 13
Smart RTH 13
Low Battery RTH 14
Failsafe RTH 15
Dynamic Home Point 15
Vision Positioning System 16
Flight Recorder 17
Attaching and Detaching the Propellers 17
DJI Intelligent Flight Battery 18

Remote Control

Remote Controller Profile 24
Remote Controller Operations 24
Remote Controller Status LED 29
Linking the Remote Controller 29
Remote Controller Compliance Version 30

© 2015 DJI. All Rights Reserved.

Camera and Gimbal

Camera Profile 32

Gimbal 33

DJI Pilot App

Camera 36

Map 40

Academy 40

User Center 40

Flight

Flight Environment Requirements 42

Flight Limits and Flight Restriction Area 42

Preflight Checklist 46

Calibrating the Compass 46

Auto Take-off and Auto Landing 47

Flight Test 48

Starting/Stopping the Motors 48

Troubleshooting (FAQ)

Appendix

Specifications 53

Intelligent Orientation Control (IOC) 56

FCC Compliance 57

 © 2015 DJI. All Rights Reserved.

Product Profile

This chapter introduces the Phantom 3 Advanced and lists the components on the aircraft and remote controllers.

© 2015 DJI. All Rights Reserved.

Product Profile

Introduction

The Phantom 3 Advanced is a brand new quadcopter capable of capturing HD video and transmitting an HD video signal out of the box. The built-in camera has an integrated gimbal to maximize stability and weight efficiency while minimizing space. Even when no GPS signal is available, Vision Positioning system provides hovering precision.

Feature Highlights

Camera and Gimbal: The Phantom 3 Advanced camera records video at up to 1080P and it is capable of capturing 12 megapixel stills.

HD Video Downlink: Low latency, HD downlink powered by an enhanced version of the DJI Lightbridge system.

DJI Intelligent Flight Battery: 4480 mAh DJI Intelligent Flight Battery employs new battery cells and a battery management system.

Flight Controller: The next generation flight controller system provides a more reliable flight experience. A new flight recorder stores the flight data from each flight, and Vision Positioning enhances hovering precision when flying indoors and no GPS is available.

 © 2015 DJI. All Rights Reserved.

Assemble the Aircraft

Removing Gimbal Clamp

Remove the gimbal clamp in the direction as shown below:

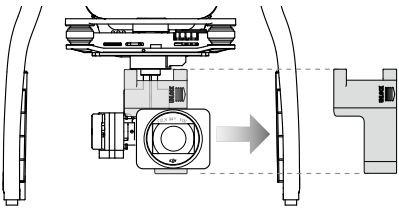

Attaching Propellers

Attach the propellers with the black nut onto motors with the black axis and spin counter-clockwise to secure. Attach propellers with grey nut onto motors without a grey axis and spin clockwise to secure.

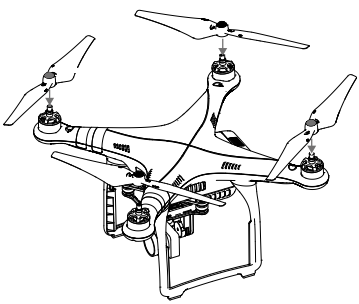

⚠ Place all propellers onto the correct motor and tighten by hand to secure its position.

Preparing Remote Controller

Tilt the Mobile Device Holder to the desired position then adjust the antennas.

1. Press the button on the side of the Mobile Device Holder to release the clamp, adjust the clamp to fit the size of the mobile device.
2. Connect the mobile device to the remote controller with a USB cable.
3. Plug one end of the cable into the mobile device, and the other end into the USB port on the back of the remote controller.

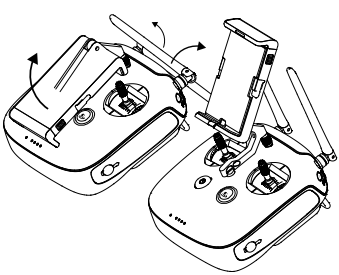

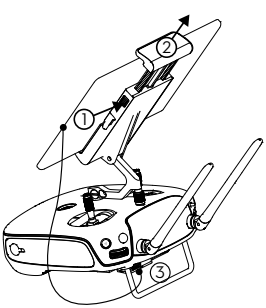

© 2015 DJI. All Rights Reserved.

Aircraft Diagram

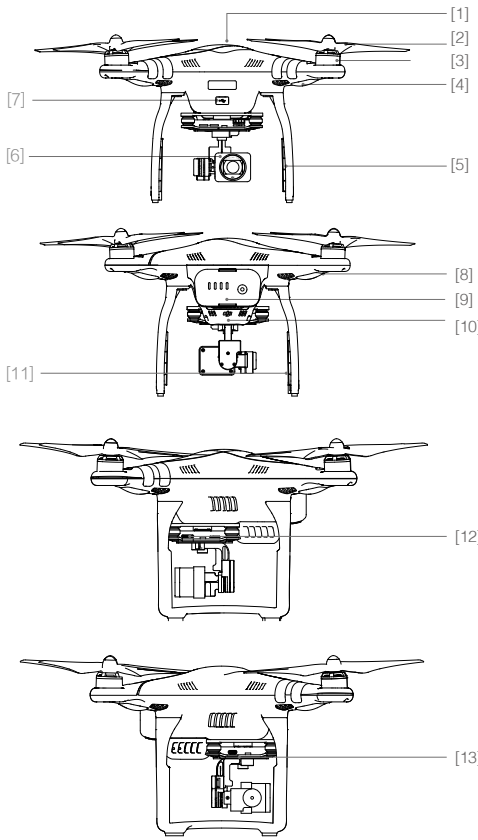

[1] GPS

[2] Propeller

[3] Motor

[4] Front LED

[5] Landing gear

[6] Gimbal and Camera

[7] Aircraft Micro-USB Port

[8] Aircraft Status Indicator

[9] Intelligent Flight Battery

[10] Vision Positioning Sensors

[11] Antennas

[12] Camera Micro-SD Card Slot

[13] Camera Micro-USB Port

Remote Controller Diagram

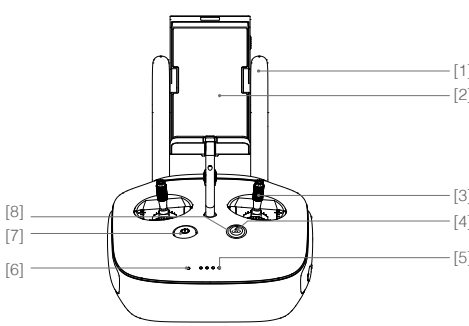

[1] Antennas

Relays aircraft control and video signal.

[2] Mobile Device Holder

Mounting place for your mobile device.

[3] Control Stick

Controls aircraft orientation.

[4] Return Home (RTH) Button

Press and hold the button to initiate Return to Home (RTH).

 © 2015 DJI. All Rights Reserved.

[5] Battery Level LEDs

Displays the battery level of the remote controller.

[6] Status LED

Displays the remote controller's system status.

[7] Power Button

Used to power on or power off the remote controller.

[8] RTH LED

Circular LED around the RTH button displays RTH status.

[9] Camera Settings Dial

Turn the dial to adjust camera settings. Only functions when the remote controller is connected to a mobile device running the DJI Pilot app.

[10] Playback Button

Playback the captured images or videos.

[11] Shutter Button

Press to take a photo. If in burst mode, the set number of photos will be taken with one press.

[12] Flight Mode Switch

Switch between P, A and F mode.

[13] Video Recording Button

Press to start recording video. Press again to stop recording.

[14] Gimbal Dial

Use this dial to control the tilt of the gimbal.

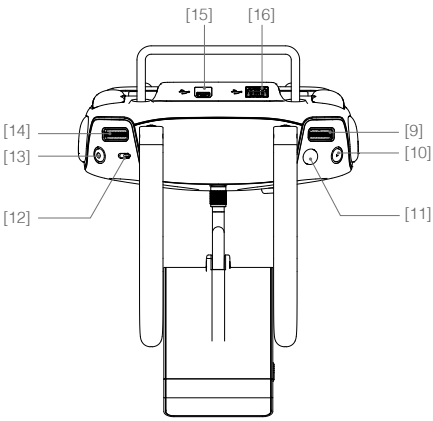

[15] Mircro-USB Port

Connect to a SD card reader to upgrade the firmware.

[16] USB Port

Connect to mobile device or to a USB thumb drive for firmware upgrdae.

[17] Back Right Button

Customizable button in DJI Pilot app.

[18] Back Left Button

Customizable button in DJI Pilot app.

[19] Power Port

Connect to a power source to charge the battery of the remote controller.

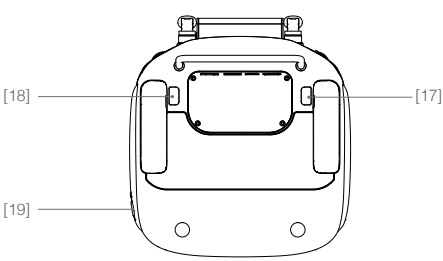

© 2015 DJI. All Rights Reserved.

Aircraft

This chapter introduces the features of the flight controller, Vision Positioning System and the Intelligent Flight Battery.

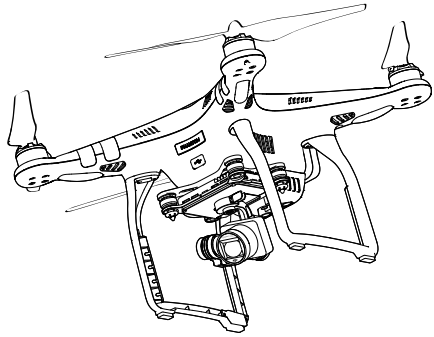

 © 2015 DJI. All Rights Reserved.

Aircraft

Flight Controller

The Phantom 3 Advanced's flight controller is based on DJI flight controller with several enhancements such as new flight mode. Three safe modes are available: Failsafe, Return Home and Dynamic Home Point. These features ensure the safe return of your aircraft if the control signal is lost. The flight controller can stores crucial flight data to the on-board storage device for each flight.

Flight Mode

Three flight modes are available. The details of each flight mode are found in the section below:

P mode (Positioning) : P mode works best when GPS signal is strong. There are three different states of P mode, which will be automatically selected by the Phantom 3 Advanced depending on signal strength of GPS and Vision Positioning sensors :

P-GPS: GPS and Vision Positioning both are available, and the aircraft is using GPS for positioning.

P-OPTI: Vision Positioning is available but the GPS signal is not. Aircraft is using only Vision Positioning for hovering

P-ATTI: Neither GPS or Vision Positioning available, aircraft is using only its barometer for positioning, so only altitude is controlled.

A mode (Attitude): GPS and Vision Positioning System is not used for stabilization. The aircraft only uses its barometer to stabilize. The aircraft can automatically return home if remote control signal is lost if the Home Point is recorded successfully.

F mode (Function): Intelligent Orientation Control (IOC) is activated in this mode. For more information about IOC, refer to the IOC section in the Appendix.

Use the Flight Controller mode switch to change the flight mode of the aircraft, refer to the "Flight Mode Switch" on P24 for more information.

Flight Status Indicator

The Phantom 3 Advanced comes with the Front LED and Aircraft Status Indicator. The positions of these LEDs are shown in the figure below:

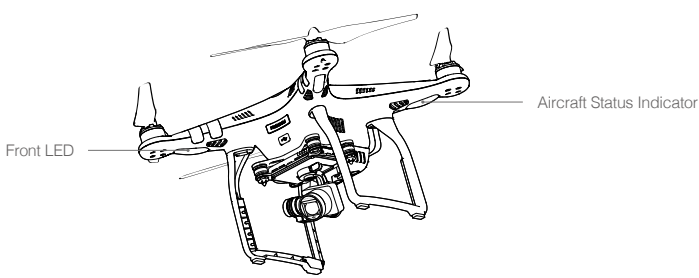

The Front shows the orientation of the aircraft. The Front LED displays solid red. Aircraft Status Indicator shows the system status of the flight controller. Refer to the table below for more information about the Aircraft Status Indicator:

© 2015 DJI. All Rights Reserved.

Aircraft Status Indicator Description

Normal	
R-G-Y ····· Red, Green and Yellow Flash Alternatively	Power on and self-check
G-Y ····· Green and Yellow Flash Alternatively	Aircraft warming up
G ····· Green Flashes Slowly	Safe to Fly (P mode with GPS and Vision Positioning)
G X2 ····· Green Flashes Twice	Safe to Fly (P mode with Vision Positioning but without GPS)
Y ····· Yellow Flashes Slowly	Safe to Fly (A mode but No GPS and Vision Positioning)
Warning	
Y ····· Fast Yellow Flashing	Remote Controller Signal Lost
R ····· Slow Red Flashing	Low Battery Warning
R ····· Fast Red Flashing	Critical Low Battery Warning
R ····· Red Flashing Alternatively	IMU Error
R —— Solid Red	Critical Error
R-Y ····· Red and Yellow Flash Alternatively	Compass Calibration Required

Return to Home (RTH)

The Return to Home (RTH) brings the aircraft back to the last recorded Home Point. There are three cases that will trigger RTH procedure; they are Smart RTH, Low Battery RTH and Failsafe RTH. The remaining part of this section will describe these three cases in details.

	GPS	Description
Home Point		The Home Point is the location at which your aircraft takes off when the GPS signal is strong. You can view the GPS signal strength through the GPS icon ( ). Aircraft status indicator will blink rapidly when home point is recorded.

Smart RTH

Use the RTH button on the remote controller (refer to “RTH button” on P28 for more information) or tap the RTH button in the DJI Pilot app when GPS is available to start Smart RTH. The aircraft returns to the latest recorded Home Point, you may control the aircraft's orientation to avoid collision during the Smart RTH. Press and hold the Smart RTH button once to start the process, press the Smart RTH button again to exit Smart RTH and regain the control.

 © 2015 DJI. All Rights Reserved.

Low Battery RTH

The low battery level failsafe is triggered when the DJI Intelligent Flight Battery is depleted to a point that may affect the safe return of the aircraft. Users are advised to return home or land the aircraft immediately when these warnings are prompted. DJI Pilot app will advise user to return the aircraft to the Home Point when low battery warning is triggered. Aircraft will automatically return to the Home Point if no action is taken after 10 seconds countdown. User can cancel the RTH by pressing once on the RTH button. The thresholds for these warnings are automatically determined based on the current aircraft altitude and its distance from the Home Point.
Aircraft will land automatically if the current battery level can only support the aircraft to land from the current altitude. User can use the remote controller to control the aircraft's orientation during the landing process.

The Battery Level Indicator is displayed in the DJI Pilot app, and is described below

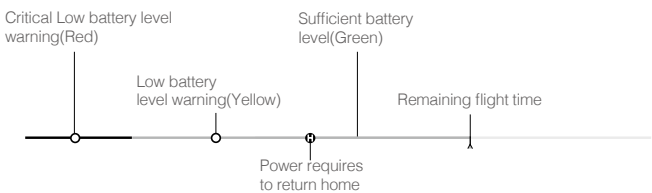

Battery level Indicator

Battery Level Warning	Remark	Aircraft Status Indicator	DJI Pilot app	Flight Instructions
Low battery level warning	The battery power is low. Please land the aircraft.	Aircraft status indicator blinks RED slowly.	Tap "Go-home" to have the aircraft return to the Home point and land automatically, or "Cancel" to resume normal flight. If no action is taken, the aircraft will automatically go home and land after 10 seconds. Remote controller will sound an alarm.	Fly the aircraft back and land it as soon as possible, then stop the motors and replace the battery.
Critical Low battery level warning	The aircraft must land immediately.	Aircraft status indicator blinks RED quickly.	The DJI Pilot app screen will flash red and aircraft starts to descend. Remote controller will sound an alarm.	The aircraft will begin to descend and land automatically.
Estimated remaining flight time	Estimated remaining flight based on current battery level.	N/A	N/A	N/A

© 2015 DJI. All Rights Reserved.

- When the critical battery level warning activates and the aircraft is descending to land automatically, you may push the throttle upward to hover the aircraft and navigate it to a more appropriate location for landing.
- Color zones and markers on the battery level indicator reflect estimated remaining flight time and are adjusted automatically, according to the aircraft's current status.

Failsafe RTH

Failsafe RTH is activated automatically if remote controller signal (including video relay signal) is lost for more than 3 seconds provided that Home Point has been successfully recorded and compass is working normally. Return home process may be interrupted and the operator can regain control over the aircraft if a remote controller signal is resumed.

Failsafe Illustration

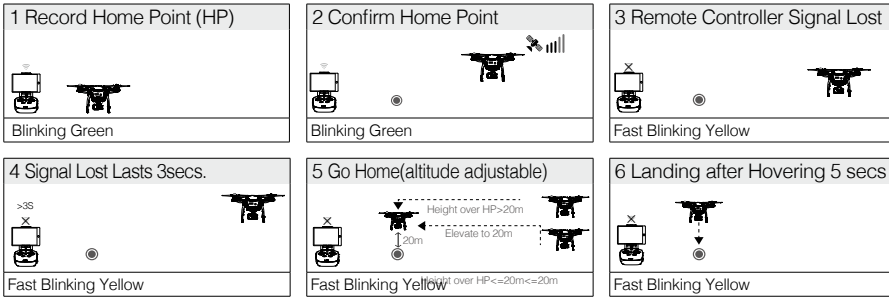

Aircraft cannot avoid obstruction during the Failsafe RTH, therefore it is important to set an suitable Failsafe altitude before each flight. Launch the DJI Pilot app and enter "Camera" view and select "MODE" to set the Failsafe altitude.
Aircraft will stop ascending and return to the Home Point immediately if throttle stick is moved during the Failsafe RTH procedure

Dynamic Home Point

Dynamic home point is useful in situations when you are in motion and require a Home Point that is different from the takeoff point. You may only use the Dynamic Home Point feature on the GPS - enabled mobile device.

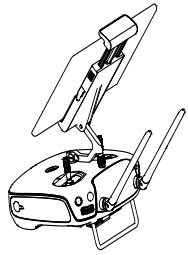

Ensure the space above the GPS module is not obstructed when using Dynamic Home Point.

 © 2015 DJI. All Rights Reserved.