PHANTOM 3

4K

User Manual V1.0

2015.11

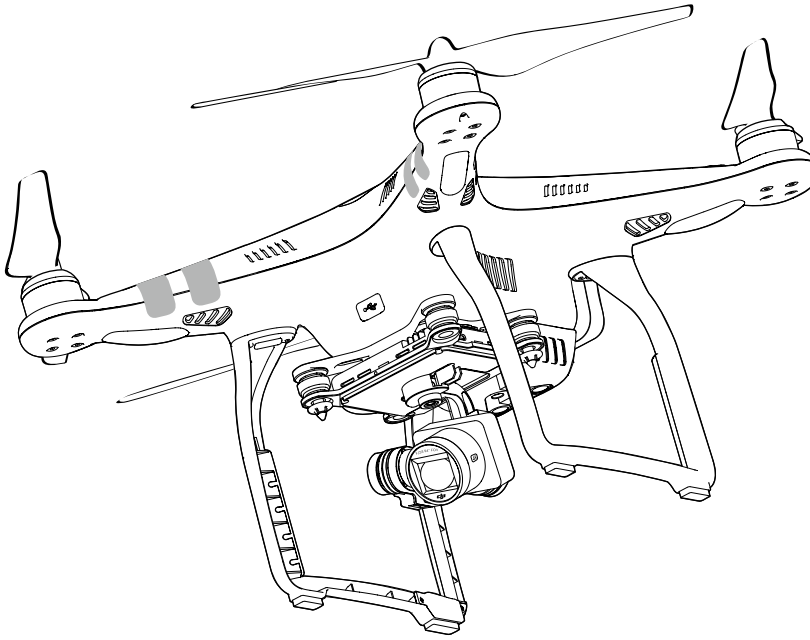

Searching for Keywords

Search for keywords such as “battery” and “install” to find a topic. If you are using Adobe Acrobat Reader to read this document, press Ctrl+F on Windows or Command+F on Mac to begin a search.

Navigating to a Topic

View a complete list of topics in the table of contents. Click on a topic to navigate to that section.

Using this manual

Legends

Warning Important Hints and Tips Reference

Read Before the First Flight

Read the following documents before using the Phantom 3 4K:

1. In the Box
2. Phantom 3 4K User Manual
3. Phantom 3 4K Quick Start Guide
4. Phantom 3 4K Safety Guidelines and Disclaimer
5. Phantom 3 4K Intelligent Flight Battery Safety Guidelines

We recommend that you watch all tutorial videos on the official DJI website and read the Disclaimer before you fly. Prepare for your first flight by reviewing the Phantom 3 4K Quick Start Guide and refer to the User Manual for more detailed information.

Video Tutorials

Please watch the tutorial videos at the link below, which demonstrates how to use Phantom 3 4K safely:

http://www.dji.com/product/phantom-3/video

Download the DJI GO app

Download and install the DJI GO app before using the aircraft. Scan the QR code to the right to download the latest version.

The Android version of the DJI GO app is compatible with Android 4.1.2 or later.
The iOS version of the DJI GO app is compatible with iOS 8.0 or later.

 © 2015 DJI. All Rights Reserved.

Contents

Using this manual

Legends 2
Read Before the First Flight 2
Video Tutorials 2
Download the DJI GO app 2

Product Profile

Introduction 6
Feature Highlights 6
Preparing the Aircraft 6
Aircraft Diagram 8
Remote Controller Diagram 8

Aircraft

Flight Controller 11
Flight Mode 11
Flight Status Indicator 11
Return-to-Home (RTH) 12
Smart RTH 12
Low Battery RTH 13
Failsafe RTH 14
Vision Positioning System 15
Flight Recorder 16
Attaching and Detaching the Propellers 17
DJI Intelligent Flight Battery 18

Remote Controller

Remote Controller Profile 23
Using the Remote Controller 23
Remote Controller Status LED 27
Linking the Remote Controller 28
Remote Controller Compliance Version 29

© 2015 DJI. All Rights Reserved.

Camera and Gimbal

Camera Profile 31

Gimbal 32

DJI GO app

Camera 35

Director 38

Store 38

Discovery 38

Flight

Flight Environment Requirements 40

Flight Limits and No-Fly Zones 40

Preflight Checklist 44

Calibrating the Compass 44

Auto Takeoff and Auto Landing 45

Flight Test 46

Starting/Stopping the Motors 46

Troubleshooting (FAQ)

Appendix

Specifications 54

Firmwares Update 56

Intelligent Flight Mode 56

After-Sales Information 56

FCC Compliance 57

 © 2015 DJI. All Rights Reserved.

Product Profile

This section introduces the Phantom 3 4K and lists the components of the aircraft and remote controller.

© 2015 DJI. All Rights Reserved.

Product Profile

Introduction

The Phantom 3 4K represents the next generation of DJI quadcopters. It is capable of capturing 4K video and transmitting an HD video signal out of the box. The built-in camera has an integrated gimbal to maximize stability while minimizing both weight and size. Even when no GPS signal is available, the Vision Positioning System allows the aircraft to hover accurately in place.

Feature Highlights

Camera and Gimbal: With the Phantom 3 4K, you're shooting 4K video at up to 30 frames per second and capturing 12 megapixel photos that look crisper and cleaner than ever. An enhanced sensor gives you greater clarity, lower noise, and better pictures than any previous flying camera.

HD Video Downlink: The low-latency long range HD downlink is powered by an enhanced version of DJI Lightbridge.

DJI Intelligent Flight Battery: The 4480 mAh DJI Intelligent Flight Battery features upgraded battery cells and an advanced power management system.

Flight Controller: The next-generation flight controller has been updated to provide a safer, more reliable flight experience. A newly implemented flight recorder stores critical data from each flight and the Vision Positioning System enhances hovering precision when flying indoors or in environments where GPS is unavailable.

Preparing the Aircraft

Removing Gimbal Clamp

Remove the gimbal clamp by sliding it to the right (when facing the nose of the aircraft), as shown below.

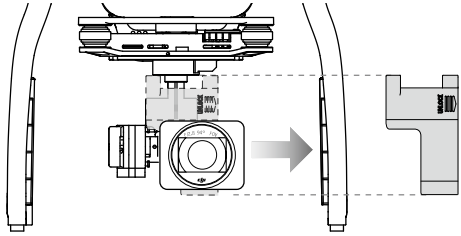

 © 2015 DJI. All Rights Reserved.

Attaching the Propellers:

Mount the propellers with black dots on to motors with black axes and spin counter-clockwise to secure. Mount the propellers with sliver dots on to motors with sliver axes and spin clockwise to secure. Be sure all propellers are securely in place.

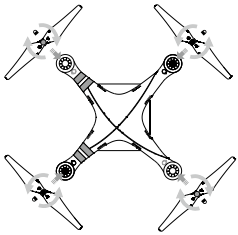

⚠ Place all propellers onto the correct motors and tighten by hand to lock them in position.

Battery Installation

Slide battery into the battery compartment according to the arrow's direction shown below. Make sure that you hear a click sound indicates the battery is firmly installed. Failure to do so may affect the flight safety of your aircraft.

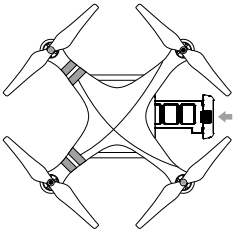

Preparing the Remote Controller:

The mobile device holder is designed for securing tablet or mobile device. Tilt the mobile device holder to the desired position, then adjust the antennas so they are facing outward.

1. Press the button on the top right side of the mobile device holder to release the clamp, then adjust the clamp to fit the size of your mobile device.
2. Secure your mobile device in the clamp by pressing down.
3. Press and hold the Power Button to turn on the remote controller. The Status LED will become solid green if the remote controller is functioning properly

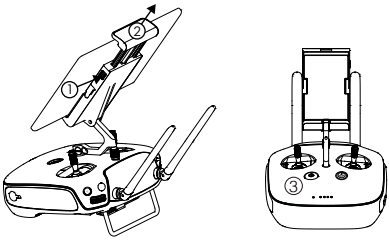

© 2015 DJI. All Rights Reserved.

Aircraft Diagram

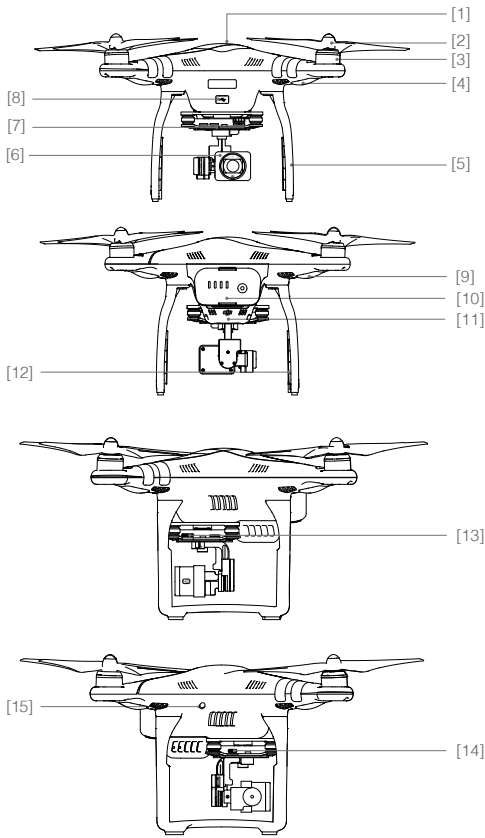

[1] GPS

[2] Propeller

[3] Motor

[4] Front LED Indicator

[5] Landing gear

[6] Gimbal and Camera

[7] Camera Status Indicator

[8] Aircraft Micro-USB Port

[9] Aircraft Status Indicator

[10] Intelligent Flight Battery

[11] Vision Positioning Sensors

[12] Antennas

[13] Camera Micro-SD Card Slot

[14] Camera Micro-USB Port

[15] Link Button

Remote Controller Diagram

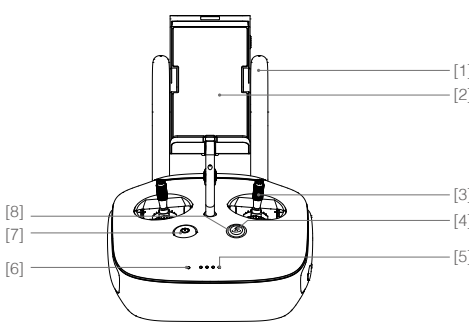

[1] Antennas

Relays aircraft control and video signal.

[2] Mobile Device Holder

Securely mounts your mobile device to the remote controller.

[3] Control Stick

Controls the orientation and movement of the aircraft.

[4] Return Home (RTH) Button

Press and hold the button to initiate Return to Home (RTH).

 © 2015 DJI. All Rights Reserved.

[5] Battery Level LEDs

Displays the battery level of the remote controller.

[6] Status LED

Displays the remote controller's system status.

[7] Power Button

Used to turn the remote controller on and off.

[8] RTH LED

Circular LED around the RTH button displays RTH status.

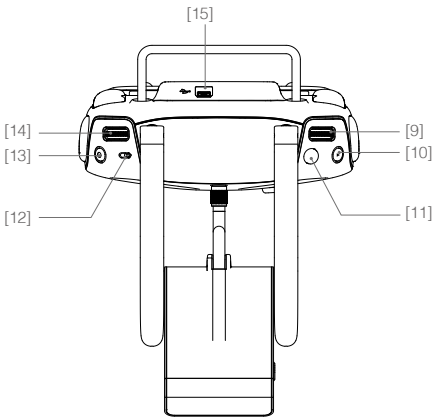

[9] Camera Settings Dial

Turn the dial to adjust camera settings. (Only functions when the remote controller is connected to a mobile device running the DJI GO app.)

[10] Playback Button

Playback the captured images or videos. (Only functions when the remote controller is connected to a mobile device running the DJI GO app.)

[11] Shutter Button

Press to take a photo. If burst mode is selected, the set number of photos will be taken with one press.

[12] Flight Mode Switch

Switch between P-mode, A-mode, and F-mode.

[13] Video Recording Button

Press to start recording video. Press again to stop recording.

[14] Gimbal Dial

Use this dial to control the tilt of the gimbal.

[15] Mircro-USB Port

Reserved port.

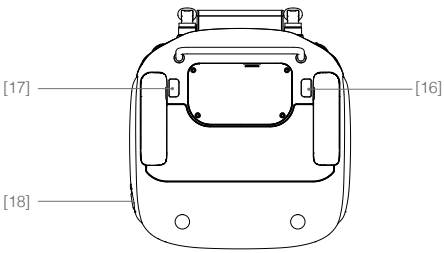

[16] C1 Button

Customizable through the DJI GO app.

[17] C2 Button

Customizable through the DJI GO app.

[18] Power Port

Connect to the DJI Phantom 3 Charger to charge the battery of the remote controller.

© 2015 DJI. All Rights Reserved.

Aircraft

This section introduces the features of the Flight Controller, Vision Positioning System, and the Intelligent Flight Battery

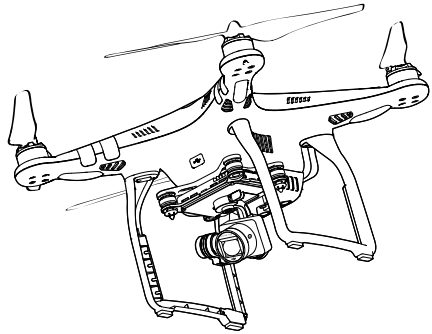

 © 2015 DJI. All Rights Reserved.

Aircraft

Flight Controller

The Phantom 3 4K's flight controller features several important upgrades, including a new flight mode. Safety modes include Failsafe and Return-to-Home. These features ensure the safe return of your aircraft if the control signal is lost. The flight controller can also save critical flight data from each flight to the on-board storage device. The new flight controller also provides increased stability and a new air braking feature.

Flight Mode

Three flight modes are available. The details of each flight mode are found below:
P-mode (Positioning) : P-mode works best when GPS signal is strong. There are three different states of P-mode, which will be automatically selected by the Phantom 3 4K depending on signal strength of GPS and Vision Positioning sensors :

P-GPS: GPS and Vision Positioning both are available. The aircraft is using GPS for positioning.

P-OPTI: Vision Positioning is available but the GPS signal strength is not sufficient. The aircraft is using only the Vision Positioning System for positioning.

P-ATTI: Neither GPS nor Vision Positioning is available. The aircraft is using only its barometer for positioning, so only altitude can be stabilized.

A-mode (Attitude): GPS and Vision Positioning System are not used for stabilization. The aircraft only uses its barometer. The aircraft can still automatically return to the home point if the control signal is lost and the Home Point was recorded successfully.
F-mode (Function): Intelligent Orientation Control (IOC) is activated in this mode. For more information about IOC, refer to the IOC section in the Appendix.

Use the Flight Controller mode switch to change the flight mode of the aircraft, refer to the "Flight Mode Switch" on Page 26 for more information.

Flight Status Indicator

The Phantom 3 4K has Front LEDs and Aircraft Status Indicators. The positions of these LEDs are shown in the figure below:

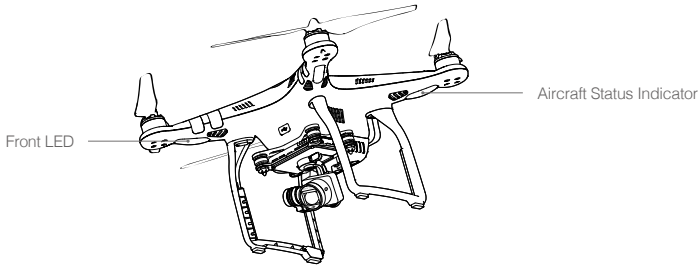

The Front LEDs show the orientation of the aircraft. The Front LEDs glow solid red when the aircraft is turned on to indicate the front (or nose) of the aircraft. The Aircraft Status Indicators communicate the system status of the flight controller. Refer to the table below for more information about the Aircraft Status Indicators:

© 2015 DJI. All Rights Reserved.

Aircraft Status Indicator Description

Normal	
R-G-Y ····· Red, Green and Yellow Flash Alternatively	Turning On and Self Diagnostic Testing
G-Y ····· Green and Yellow Flash Alternatively	Warming Up
G ····· Green Flashes Slowly	Safe to Fly (P-mode with GPS and Vision Positioning)
G X2 ····· Green Flashes Twice	Safe to Fly (P-mode with Vision Positioning but without GPS)
Y ····· Yellow Flashes Slowly	Safe to Fly (A-mode but No GPS and Vision Positioning)
Warning	
Y ····· Fast Yellow Flashing	Remote Controller's Signal Lost
R ····· Slow Red Flashing	Low Battery Warning
R ····· Fast Red Flashing	Critical Battery Warning
R ····· Red Flashing Alternatively	IMU Error
R —— Solid Red	Critical Error
R-Y ····· Red and Yellow Flash Alternatively	Compass Calibration Required

Return-to-Home (RTH)

The Return-to-Home (RTH) function brings the aircraft back to the last recorded Home Point. There are three types of RTH procedures: Smart RTH, Low Battery RTH, and Failsafe RTH. This section describes these three scenarios in detail.

	GPS	Description
Home Point		If a strong GPS signal was acquired before takeoff, the Home Point is the location from which the aircraft was launched. The GPS signal strength is indicated by the GPS icon ( ). The aircraft status indicator will blink rapidly when the home point is recorded.

Smart RTH

Use the RTH button on the remote controller (refer to "RTH button" on page 26 for more information) or tap the RTH button in the DJI GO app and follow the on-screen instructions when GPS is available to initiate Smart RTH. The aircraft will then automatically return to the last recorded Home Point. You may use the remote controller's control sticks to control the aircraft's position to avoid a collision during the Smart RTH process. Press and hold the Smart RTH button once to start the process, and press the Smart RTH button again to terminate the procedure and regain full control of the aircraft.

 © 2015 DJI. All Rights Reserved.

Low Battery RTH

The low battery level failsafe is triggered when the DJI Intelligent Flight Battery is depleted to a point that may affect the safe return of the aircraft. Users are advised to return home or land the aircraft immediately when prompted. The DJI GO app will display a notice when a low battery warning is triggered. The aircraft will automatically return to the Home Point if no action is taken after a ten-second countdown. The user can cancel the RTH procedure by pressing the RTH button on the remote controller. The thresholds for these warnings are automatically determined based on the aircraft's current altitude and distance from the Home Point.

The aircraft will land automatically if the current battery level can only support the aircraft long enough to descend from its current altitude. The user can still use the remote controller to alter the aircraft's orientation during the landing process.

The Battery Level Indicator is displayed in the DJI GO app, and is described below:

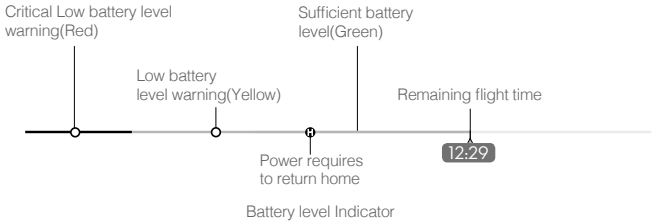

Battery Level Warning	Remark	Aircraft Status Indicator	DJI GO app	Flight Instructions
Low battery level warning	The battery power is low. Please land the aircraft.	Aircraft status indicator blinks RED slowly.	Tap "Go-home" to have the aircraft return to the Home point and land automatically, or "Cancel" to resume normal flight. If no action is taken, the aircraft will automatically go home and land after 10 seconds. Remote controller will sound an alarm.	Fly the aircraft back and land it as soon as possible, then stop the motors and replace the battery.
Critical Low battery level warning	The aircraft must land immediately.	Aircraft status indicator blinks RED quickly.	The DJI GO app display will flash red and the aircraft will start to descend. The remote controller will sound an alarm.	Allow the aircraft to descend and land automatically.
Estimated remaining flight time	Estimated remaining flight based on current battery level.	N/A	N/A	N/A

© 2015 DJI. All Rights Reserved.

- When Critical battery level warning is triggered and the aircraft begins to land automatically, you may push the throttle upward to make the aircraft hover at its current altitude, giving you an opportunity to navigate to a more appropriate landing location.
- The colored zones and markers on the battery level indicator bar reflect the estimated remaining flight time. They are automatically adjusted according to the aircraft's current location and status.

Failsafe RTH

If the Home Point was successfully recorded and the compass is functioning normally, Failsafe RTH will be automatically activated if the remote controller signal is lost for more than three seconds. The Return-to-Home process may be interrupted and the operator may regain control of the aircraft if the remote controller signal connection is re-established.

Failsafe Illustration

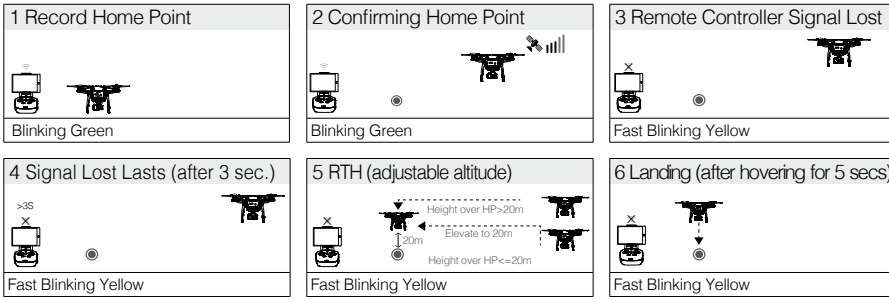

- Aircraft cannot return to the Home Point when GPS signal is weak ([ ] displays grey) or unavailable.
- Aircraft automatically descends and lands if RTH is triggered when the aircraft flies within a 20 meters (65 feet) radius of the Home Point. Aircraft will stop ascending and immediately return to the Home Point if you move the throttle stick if the aircraft reaches 20 meters (65 feet) altitudes or beyond during Failsafe.
- The aircraft cannot avoid obstruction during the Failsafe RTH, therefore, it is important to set an suitable Failsafe altitude before each flight. Launch the DJI GO app and enter "Camera" and select "MODE > Advanced Settings > Failsafe mode" to set the Failsafe altitude.
- User cannot control the aircraft while the aircraft is ascending to its failsafe altitude. However, user can press RTH button once to exit ascending and regain control.

Failsafe Safety Notices

	The aircraft cannot avoid obstruction during the Failsafe RTH, therefore, it is important to set an suitable Failsafe altitude before each flight. Launch the DJI GO app and enter "Camera" and select "MODE > Advanced Settings > Failsafe mode" to set the Failsafe altitude.

 © 2015 DJI. All Rights Reserved.

	If the aircraft is flying under 20 meters (65 feet) and Failsafe (including Smart RTH, Lower Battery RTH) is triggered, the aircraft will first automatically ascend to 20 meters (65 feet) from the current altitude. You can only cancel the ascending by exiting the Failsafe. Refer to "RTH Button" on page 26 for more information on how to exit the Failsafe and regain the control of the remote controller.
	Aircraft automatically descends and lands if RTH is triggered when the aircraft flies within a 20 meters (65 feet) radius of the Home Point. Aircraft will stop ascending and immediately return to the Home Point if you move the throttle stick if the aircraft reaches 20 meters (65 feet) altitudes or beyond during Failsafe.
	Aircraft cannot return to the Home Point when GPS signal is weak ([ ] displays grey) or unavailable.
	if you move the throttle stick after the aircraft rises above 65 feet (20m) but below the pre-set Failsafe RTH altitude, the aircraft will stop ascending and immediately return to the Home Point.

Vision Positioning System

The DJI Vision Positioning System uses ultrasound and image data to help the aircraft maintain its current position. With the help of Vision Positioning, your Phantom 3 4K can hover in place more precisely and fly indoors or in other environments where a GPS signal is not available. The main components of the Vision Positioning System are located on the bottom of your Phantom 3 4K; they include [2] two ultrasonic sensors and [1] one monocular camera.

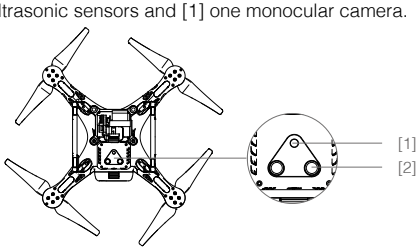

Using Vision Positioning

Vision Positioning is activated automatically when the Phantom 3 4K is turned on. No further action is required. Vision Positioning is typically used in indoor environments, where GPS is unavailable. Using the sensors that are built into the Vision Positioning system, the Phantom 3 4K can hover precisely even without GPS.

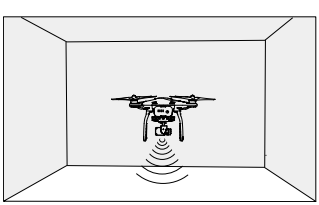

© 2015 DJI. All Rights Reserved.

Follow the steps below to use Vision Positioning:

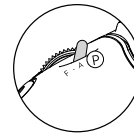

1. Toggle the flight mode switch to P-mode.
2. Place the aircraft on a flat surface. Note that the Vision Positioning system cannot work properly on surfaces without clear pattern variations.
3. Turn on the aircraft. The aircraft status indicator will flash green two times, which indicates the Vision Positioning system is ready. Gently push the throttle up to lift off and the aircraft will hover in place.

The performance of your Vision Positioning System is affected by the surface over which it is flying. The ultrasonic sensors may not be able to accurately measure distances when operating above sound-absorbing materials. In addition, the camera may not function correctly in suboptimal environments. The aircraft will switch from P-mode to A-mode automatically if neither GPS nor Vision Positioning System are available. Operate the aircraft with great caution in the following situations:

- Flying over monochrome surfaces (e.g. pure black, pure white, pure red, pure green).
- Flying over a highly reflective surfaces.
- Flying at high speeds(over 8 m/s at 2 meters or over 4 m/s at 1 meter).
- Flying over water or transparent surfaces.
- Flying over moving surfaces or objects.
- Flying in an area where the lighting changes frequently or drastically.
- Flying over extremely dark (lux < 10) or bright (lux > 100,000) surfaces.
- Flying over surfaces that can absorb sound waves (e.g. thick carpet).
- Flying over surfaces without clear patterns or texture.
- Flying over surfaces with identical repeating patterns or textures (e.g. tiles with the same design).
- Flying over inclined surfaces that will deflect sound waves away from the aircraft.

- Keep the sensors clean at all times. Dirt or other debris may adversely affect the effectiveness of the sensors.
- Vision Positioning is only effective when the aircraft is at altitudes of 0.3 to 3 meters.
- The Vision Positioning System may not function properly when the aircraft is flying over water.
- The Vision Positioning System may not be able to recognize pattern on the ground in low light conditions (less than 100 lux).
- Do not use other ultrasonic devices with frequency of 40 KHz when Vision Positioning system is in operation.
- Vision Positioning System may not be able to stabilize the aircraft when flying close to the ground (below 0.5 meters) at fast speeds..

Keep the animals away from the aircraft when Vision Positioning system is activated. The sonar sensor emits high frequency sounds that are only audible to some animals.

Flight Recorder

Flight data is automatically recorded to the internal storage of the aircraft. This includes flight telemetry, aircraft status information, and other parameters. To access these data, connect the aircraft to the PC through the Micro-USB port and launch the DJI GO app.

 © 2015 DJI. All Rights Reserved.

Attaching and Detaching the Propellers

Use only DJI approved propellers with your Phantom 3 4K. The grey and black nuts on the propeller indicate where they should be attached and in which direction whey should spin. To attach the propellers properly, match the nut color with the motor axis color.

Propellers	Silver Dot	Black Dot
Figure		
Attach On	Motors with a grey axes	Motors with a black axes
Legends	Lock : Turn the propellers in the indicated direction to mount and tighten. Unlock : Turn the propellers in the indicated direction to loosen and remove.	

Attaching the Propellers

1. Be sure to remove the warning stickers from the motors before attaching the propellers.
2. Attach the propellers with silver dots onto the motors with silver axes and spin the propellers clockwise to secure them in place. Attach the propellers with black dots onto the motors with black axes and spin the propellers counter-clockwise to secure them in place. Be sure to tighten each propeller by hand before flight.

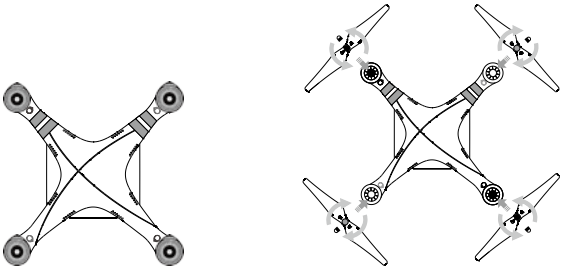

- Ensure the propellers are attached to the correct motors. Only using the propller with the same model.
- Tighten the propellers with both hands before each flight.
- Ensure that all propellers are in good condition before each flight. DO NOT use aged, chipped, or broken propellers.
- Stand clear of the motors and DO NOT touch the propellers when they are spinning.

Detaching the Propellers

Hold the motor in place with one hand, then spin the propeller in the indicated unlock direction.

- Check that the propellers and motors are installed correctly and firmly before every flight.
- Ensure that all propellers are in good condition before each flight. DO NOT use aged, chipped, or broken propellers.
- To avoid injury, STAND CLEAR of and DO NOT touch propellers or motors when they are spinning.
- ONLY use original DJI propellers for a better and safer flight experience.

© 2015 DJI. All Rights Reserved.

DJI Intelligent Flight Battery

The DJI Intelligent Flight Battery has a capacity of 4480 mAh, a voltage of 15.2 V, and a smart charge/discharge functionality. It should only be charged using an appropriate charger that has been approved by DJI.

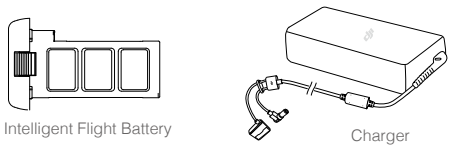

⚠ The Intelligent Flight Battery must be fully charged before using it for the first time. Refer to "Charging the Intelligent Flight Battery" for more information.

Be aware that the output power of the supplied Phantom 3 4K charger is 100W.

DJI Intelligent Flight Battery Functions

1. Battery Level Display: the LED indicators display the current battery level.
2. Battery Life Display: the LEDs display the current battery power cycle.
3. Auto-Discharging Function: To prevent swelling, the battery automatically discharges to below 65% of total power when it is idle for more than ten days. It takes around two days to discharge the battery to 65%. It is normal to feel moderate heat being emitted from the battery during the discharge process. Discharge thresholds can be set in the DJI GO app.
4. Balanced Charging: Automatically balances the voltage of each battery cell when charging.
5. Overcharge Protection: Charging automatically stops when the battery is fully charged.
6. Temperature Detection: The battery will only charge when the temperature is between 0°C (32°F) and 40°C (104°F).
7. Over Current Protection: The battery stops charging when high amperage (more than 8 A) is detected.
8. Over Discharge Protection: To prevent over-discharge damage, discharging automatically stops when the battery voltage reaches 12 V.
9. Short Circuit Protection: Automatically cuts the power supply when a short circuit is detected.
10. Battery Cell Damage Protection: The DJI GO app displays a warning message when a damaged battery cell is detected.
11. Battery Error History: Browse the battery error history in the DJI GO app.
12. Sleep Mode: To save power, the battery enters sleep mode after 20 minutes of inactivity.
13. Communication: Information pertaining to the battery's voltage, capacity, current, etc. is transmitted to the aircraft's main controller.

⚠ Refer to *Phantom 3 4K Intelligent Flight Battery Safety Guidelines* before use. Users take full responsibility for all operations and usage.

Using the Battery

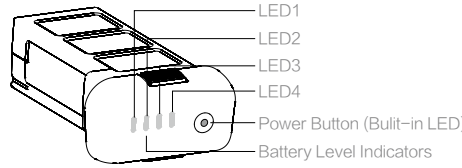

 © 2015 DJI. All Rights Reserved.

Turning ON/OFF

Turning On: Press the Power Button once, then press again and hold for 2 seconds to turn on. The Power LED will turn red and the Battery Level Indicators will display the current battery level.

Turning Off: Press the Power Button once, then press again and hold for 2 seconds to turn off. The battery power LED will flash when powering off the Phantom to allow automatically stopping of a recording during the event recording wasn't stopped.

The Battery Level Indicators will also show the current battery level during charging and discharging. The indicators are defined below.

▯ : LED is on. ▯ : LED is flashing.
▯ : LED is off.

Battery Level				
LED1	LED2	LED3	LED4	Battery Level
▯	▯	▯	▯	87.5%~100%
▯	▯	▯	▯	75%~87.5%
▯	▯	▯	▯	62.5%~75%
▯	▯	▯	▯	50%~62.5%
▯	▯	▯	▯	37.5%~50%
▯	▯	▯	▯	25%~37.5%
▯	▯	▯	▯	12.5%~25%
▯	▯	▯	▯	0%~12.5%
▯	▯	▯	▯	=0%

Low Temperature Notice:

1. Battery capacity is significantly reduced when flying in low temperature (< 0°C) environments.
2. It is not recommended that the battery be used in extremely low temperature (< -10°C) environments. Battery voltage should reach the appropriate level when operating environment with temperatures between -10°C and 5°C.
3. End the flight as soon as the DJI GO app displays the "Low Battery Level Warning" in low temperature environments.
4. Keep the battery indoors to warm it before flying in low temperature environments.
5. To ensure optimal performance of the battery, keep the battery temperature above 20°C.
6. The charger will stop charging the battery if the battery cell's temperature is not within the operating range (0°C ~ 40°C).

⚠ In cold environments, insert the battery into the battery compartment and allow the aircraft for approximately 1-2 minutes to warm up before taking off.

Checking the Battery Level

The Battery Level Indicators display how much power remains. When the battery is turned off, press the Power Button once. The Battery Level Indicators will light up to display the current battery level. See below for details.

© 2015 DJI. All Rights Reserved.

Battery life

Battery life refers to how many more times the battery can be discharged and recharged before it must be replaced. When the battery is turned off, press and hold the Power Button for 5 seconds to check the battery life. The Battery Level Indicators will light up and/or blink for two seconds, as shown below:

Battery Life				
LED1	LED2	LED3	LED4	Battery Life
▯	▯	▯	▯	90%~100%
▯	▯	▯	▮	80%~90%
▯	▯	▯	▯	70%~80%
▯	▯	▮	▯	60%~70%
▯	▯	▯	▯	50%~60%
▯	▮	▯	▯	40%~50%
▯	▯	▯	▯	30%~40%
▮	▯	▯	▯	20%~30%
▯	▯	▯	▯	below 20%

⚠ When battery life reaches 0%, it can no longer be used.

For more information about the battery, launch the DJI GO app and check the information that is listed under the battery tab.

Charging the Intelligent Flight Battery

1. Connect the Battery Charger to a power source (100-240 V 50/60 Hz).
2. Open the Protection Cap and connect the Intelligent Flight Battery to the Battery Charger. If the battery level is above 95%, turn on the battery before charging.
3. The Battery Level Indicator will display the current battery level as it is charging.
4. The Intelligent Flight Battery is fully charged when the Battery Level Indicators are all off.
5. Air-cool the Intelligent Flight Battery after each flight. Allow its temperature to drop to room temperature before storing it for an extended period.

⚠
- We do not recommend charging the Intelligent Flight Battery and remote controller with the standard charger at the same time, otherwise the charger may overheat.
- Always turn off the battery before inserting it or removing it from the Phantom 3 4K. Never insert or remove a battery when it is turned on.

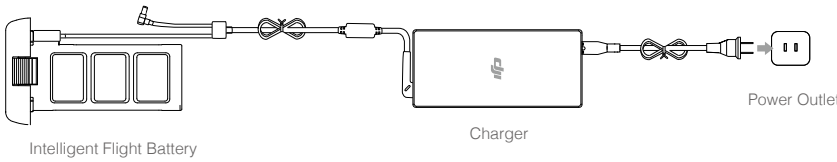

 © 2015 DJI. All Rights Reserved.