Status LED	Alarm	Remote Controller Status
Ⓡ —— Solid Red	♪ Chime	The remote controller is disconnected from the aircraft.
Ⓖ —— Solid Green	♪ Chime	The remote controller is connected to the aircraft.
Ⓡ ····· Slow Blinking Red	D-D-D·····	Remote controller error.
Ⓡ Ⓖ / Ⓡ Ⓨ ····· Red and Green/ Red and Yellow Alternate Blinks	None	HD downlink is disrupted.
RTH LED	**Sound**	**Remote Controller Status**
Ⓦ —— Solid White	♪ Chime	Aircraft is returning home.
Ⓦ ····· Blinking White	D · · ·	Sending Return-to-Home command to the aircraft.
Ⓦ ····· Blinking White	DD ·· ·· ··	Return-to-Home procedure in progress.

⚠ The Remote Status Indicator will blink red and sound an alert, when the battery level is critically low.

Linking the Remote Controller

The remote controller is linked to your aircraft before delivery. Linking is only required when using a new remote controller for the first time. Follow these steps to link a new remote controller:

1. Turn on the remote controller and connect to the mobile device. Launch the DJI GO app.
2. Turn on the Intelligent Flight Battery.
3. Enter “Camera” and tap on and then tap “Linking RC” button as shown below.

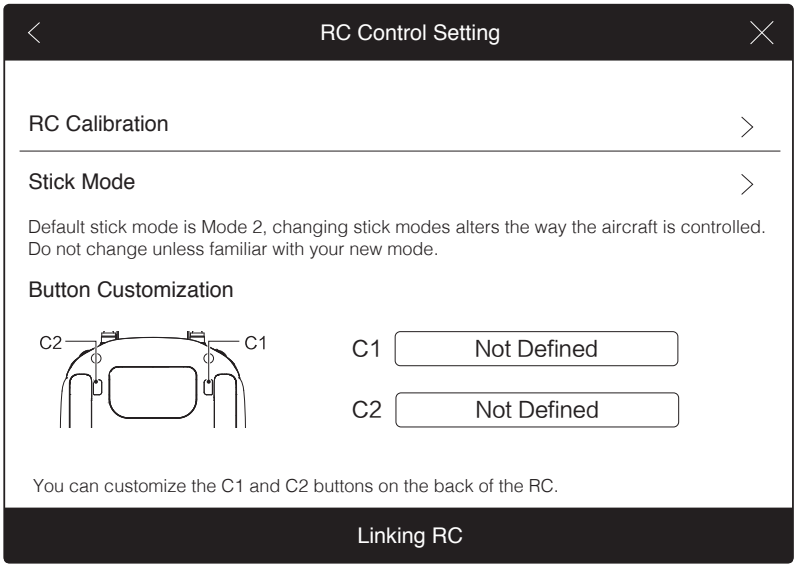

© 2016 DJI. All Rights Reserved.

4. The remote controller is ready to link. The Remote Controller Status Indicator blinks blue and a beep is emitted.

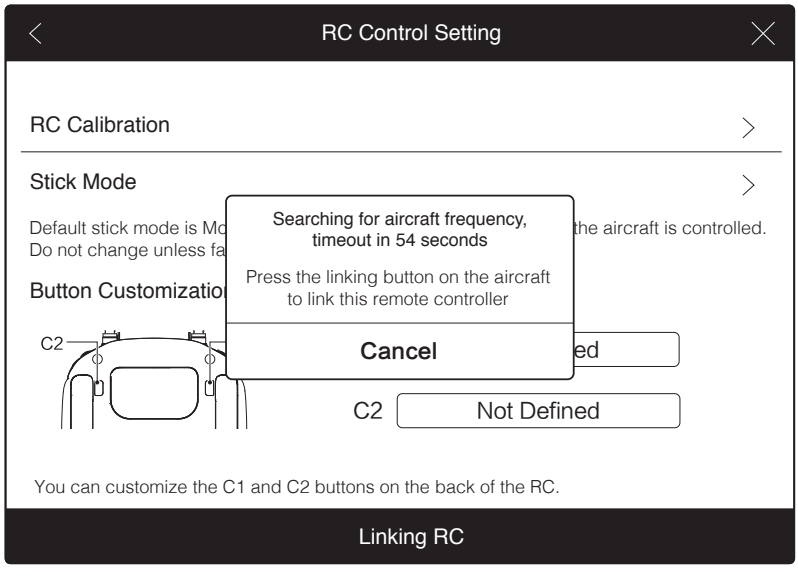

5. Locate the linking button on the side of the aircraft, as shown in the figure below. Press the link button to start linking. The Remote Controller Status Indicator LED will display a solid green once the remote controller is successfully linked to the aircraft.

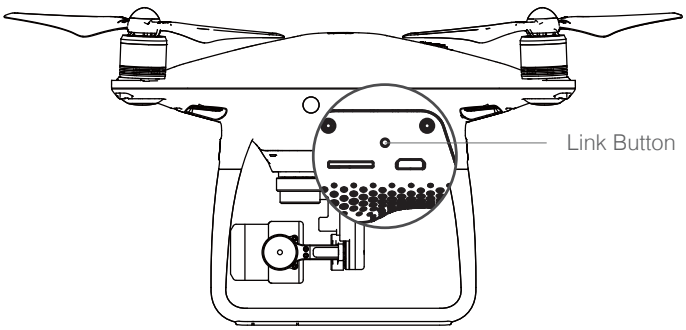

⚠ • The remote controller will un-link itself from an aircraft if a new remote controller is linked to the same aircraft.

 © 2016 DJI. All Rights Reserved.

Camera and Gimbal

This section provides the technical specifications of the camera and explains the gimbal's operation modes.

© 2016 DJI. All Rights Reserved.

Camera and Gimbal

Camera Profile

The on-board camera of Phantom 4 Pro/Pro+ uses the 1 inch CMOS sensor to capture video (up to 4096x2160p at 60fps) and 12 megapixel stills. You may choose to record the video in either MOV or MP4 format. Available picture shooting modes include burst, continuous, and time-lapse mode. A live preview of what the camera sees can be monitored on the connected mobile device via the DJI GO app.

Camera Micro SD Card Slot

To store your photos and videos, insert the Micro SD card into the slot, as shown below, before turning on the Phantom 4 Pro / Pro+. The Phantom 4 Pro / Pro+ comes with a 16 GB Micro SD card and supports Micro SD cards up to 64 GB. A UHS-1 Micro SD card is recommended due to their fast read and write speeds allowing you to save high-resolution video data.

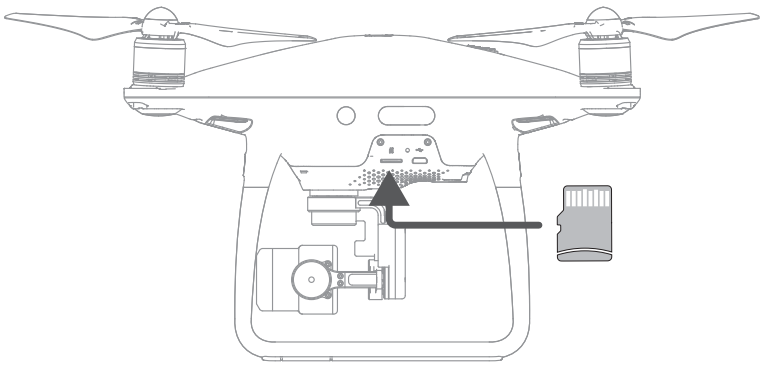

⊘	Do not remove the Micro SD card from the Phantom 4 Pro / Pro+ when it is turned on.
💡	To ensure the stability of the camera system, single video recordings are capped at 30 minutes.

Camera Data Port

Turn on the Phantom 4 Pro / Pro+ and connect a USB cable to the Camera Data Port to download photos and videos to your computer.

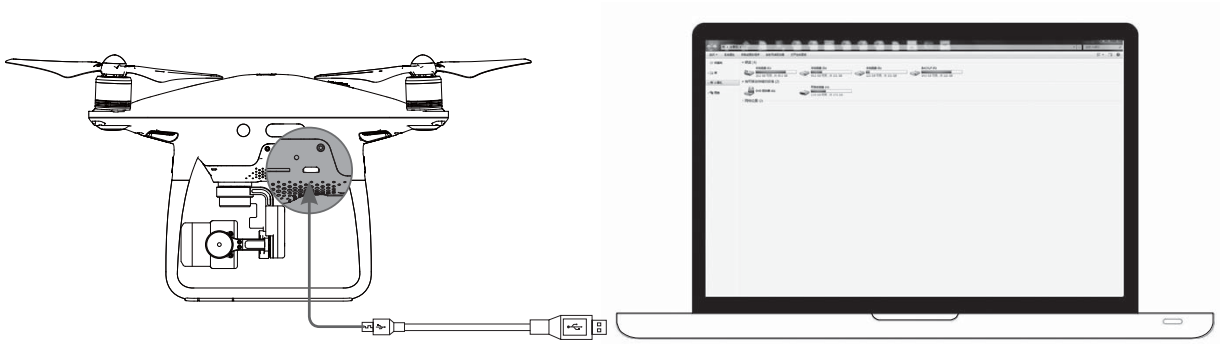

⚠	The aircraft must be turned on before attempting to access the files on the Micro SD card.

 © 2016 DJI. All Rights Reserved.

Camera Operation

Use the Shutter and Video Recording buttons on the remote controller to shoot the images or videos through the DJI GO app. For more information about how to use these buttons, refer to "Controlling the Camera Page 31".

Camera LED Indicator

Camera LED Indicator lights up after the flight battery is powered on. It provides information on the working status of the camera.

Camera LED Indicator	Camera status
Ⓖ Green Fast Blink (0.2s off, 0.1s on)	System is warming up.
Ⓖ Green Blink Once (0.5s off, 0.4s on)	Taking a single picture.
Ⓖ Green Blink 3 Times (0.3s off, 0.1s on)	Taking 3 or 5 photos per shot.
Ⓡ Slow Red Blink (1.6s on, 0.8s off)	Recording.
Ⓡ Fast Red Blink (0.5s off, 0.2s on)	SD card error.
ⓇⓇ Double Red Blink (0.1s on, 0.1s off, 0.1s on, 0.1s off)	Overheated Camera
Ⓡ Solid Red	System error.
Ⓖ Ⓡ Green and Red Blink (0.8s green on, 0.8s red on)	Firmware Upgrading

Gimbal

Gimbal Profile

The 3-axis gimbal provides a steady platform for the attached camera, allowing you to capture clear, stable images and video. The gimbal can tilt the camera within a 120˚ range.

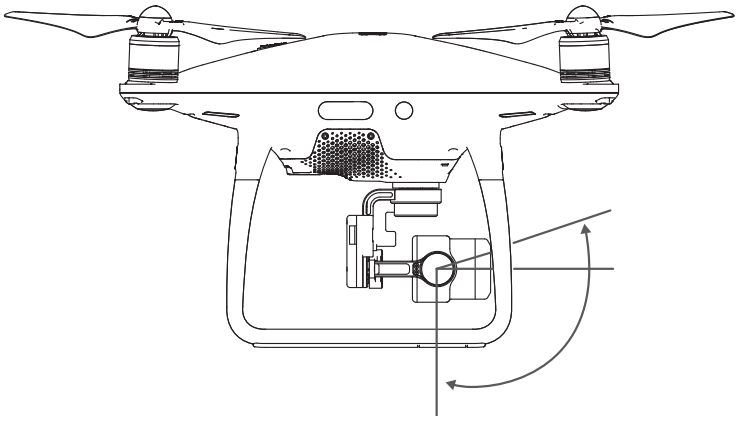

Use the gimbal dial on the remote controller to control the tilt movement of the camera.

© 2016 DJI. All Rights Reserved.

Gimbal Operation Modes

Two gimbal operation modes are available. Switch between the different operation modes on the camera settings page of the DJI GO app. Note that your mobile device must be connected to the remote controller for changes to take effect. Refer to the table below for details:

	Follow Mode	The angle between gimbal's orientation and aircraft's nose remains constant at all times.
	FPV Mode	The gimbal will synchronize with the movement of the aircraft to provide a first-person perspective flying experience.
	• A gimbal motor error may occur in these situations: (1) the aircraft is placed on uneven ground or the gimbal's motion is obstructed (2) the gimbal has been subjected to an excessive external force, such as a collision. Please take off from flat, open ground and protect the gimbal at all times. • Flying in heavy fog or clouds may make the gimbal wet, leading to temporary failure. The gimbal will recover full functionality after it dries. • It is normal for the gimbal to produce short pulse of beeping tone upon initialization.	

 © 2016 DJI. All Rights Reserved.

DJI GO app

This section introduces the four main functions of the DJI GO app.

© 2016 DJI. All Rights Reserved.

DJI GO App

The DJI GO app is a mobile application designed specifically for DJI equipment. Use this app to control the gimbal, camera, and other aircraft functions. The app features Equipment, Editor, Explorerand Me sections, which are used for configuring your aircraft , editing and sharing your photos and videos with others. It is recommended that you use a tablet for the best experience.

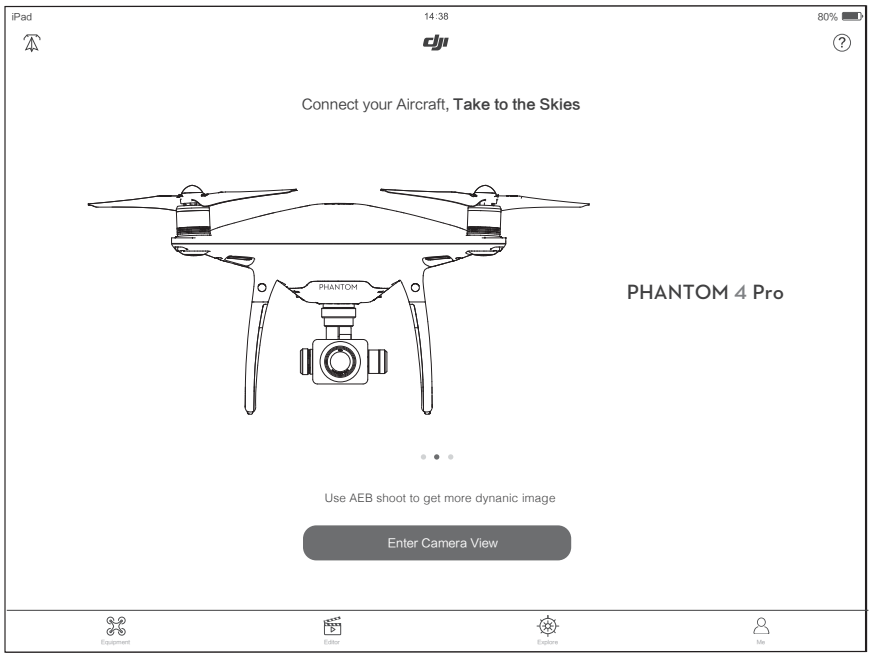

Equipment

On the Equipment page, you can enter Camera View, visit the Academy or view your flight records.

Camera View

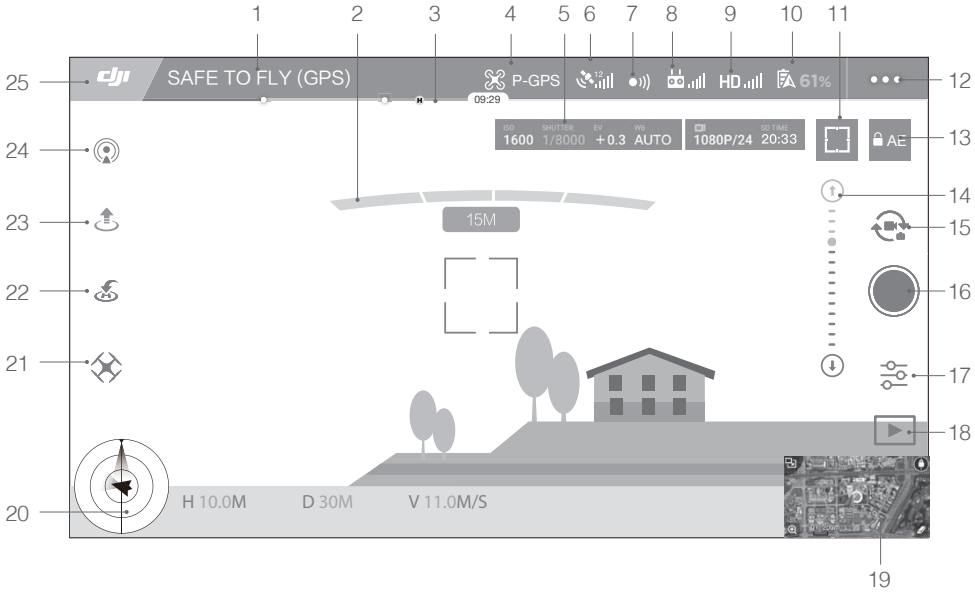

 © 2016 DJI. All Rights Reserved.

[1] System Status

SAFE TO FLY (GPS) : Indicates the current aircraft system status and GPS signal strength.

[2] Battery Level Indicator

: Describes the battery level of the aircraft according to its immediate status. The colored zones represent the various stages of battery level. When the battery level drops to a certain stage, the system will prompt the user to take the appropriate action.

[3] Flight Mode

: The text next to this icon indicates the current flight mode.
Tap this icon to configure the Main Controller Settings, to change the flight limits and set the gain values.

[4] GPS Signal Strength

: Shows the current GPS signal strength. White bars indicate adequate GPS strength.

[5] Remote Controller Signal

: Shows the signal strength of the remote controller.

[6] HD Video Link Signal Strength

HD : Shows the signal strength of the HD video downlink between the aircraft and the remote controller.

[7] Battery Level

61% : Shows the current battery level.
Tap this icon to view the battery information menu where you can set the battery warning thresholds and view the battery log.

[8] General Settings

••• : Tap this icon to view General Settings where you can set the flight parameters, and enable the Flight Route display.

[9] Camera Operation Bar

The bar will be displayed when using the on-board camera.

Shutter and Recording Settings

MENU : Tap this icon to enter various camera value settings including the Color Mode, Video Size, and Image Size.

Shutter

: Tap this button to take a single photo. Press and hold this button to switch between Single Shot, Triple Shot and Timed Shot modes.

Record

: Tap once to start recording video, then tap again to stop recording. You can also press the Video Recording Button on the remote controller.

Playback

▶ : Tap this icon to play back photos and videos after they are captured.

© 2016 DJI. All Rights Reserved.

Camera Settings

: Tap this icon to set the ISO, Shutter Speed and Exposure Value of the camera.

[10] Mini Map

Displays the flight path of the current flight. Tap the Mini Map to switch between Camera View and Map View.

[11] Flight Telemetry

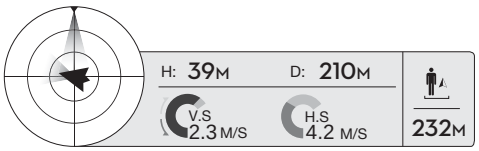

Flight Attitude and Radar Function:

The aircraft's flight attitude is indicated by the target-like icon.

(1) The red arrow shows which direction the aircraft is facing.

(2) The ratio of the grey area to the blue area indicates the aircraft's pitch.

(3) The horizontal level of the grey area indicates the aircraft's roll angle.

Flight Parameters:

Altitude: Vertical distance from the Home Point.

Distance: Horizontal distance from the Home Point.

Vertical Speed: Movement speed across a vertical distance.

Horizontal Speed: Movement speed across a horizontal distance.

Aircraft Distance:

The horizontal distance between the aircraft and the operator.

[12] Intelligent Flight Mode

: This icon displays the Intelligent Flight Mode settings when the aircraft has entered F-mode. Tap to select one of the Intelligent Flight Modes. Refer to Intelligent Flight Modes (p. 62) for details.

[13] Return-to-Home (RTH)

: Initiate RTH home procedure. Tap to have the aircraft return to the latest Home Point.

[14] Gimbal Operation Mode

This icon will be displayed when using a DJI gimbal (or camera). Tap to select a mode or re-align the gimbal.

 © 2016 DJI. All Rights Reserved.

[15] Auto Takeoff/Landing

/ : Tap to initiate auto takeoff or landing.

[16] Livestream

: This icon indicates the current video feed is being broadcast live on YouTube. Ensure that mobile data service is available on your mobile device.

[17] Back

: Tap this icon to return to the main menu.

Editor

An intelligent video editor is built into the DJI GO app. After recording several video clips and downloading them to your mobile device, go to Editor on the home screen. You can then select a template and a specified number of clips which are automatically combined to create a short film that can be shared immediately.

SkyPixel

Find out about our latest events, featured products and trending Skypixel uploads in the Explore page.

Me

If you already have a DJI account, you will be able to participate in forum discussions, earn Credits in the DJI Store, and share your artwork with the community.

© 2016 DJI. All Rights Reserved.

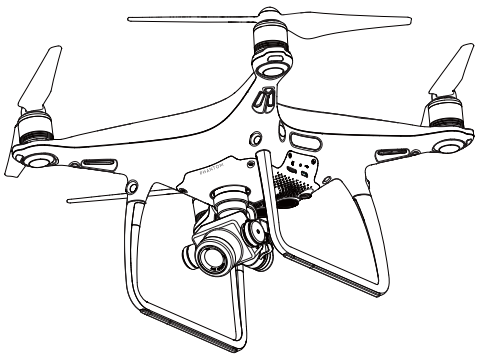

Flight

This section describes safe flight practices and flight restrictions.

 © 2016 DJI. All Rights Reserved.

Flight

Once pre-flight preparation is complete, it is recommended that you use the flight simulator in the DJI GO app to hone your flight skills and practice flying safely. Ensure that all flights are carried out in an open area.

Flight Environment Requirements

1. Do not use the aircraft in severe weather conditions. These include wind speeds exceeding 10 m/s , snow, rain and fog.
2. Only fly in open areas. Tall structures and large metal structures may affect the accuracy of the on-board compass and GPS system.
3. Avoid obstacles, crowds, high voltage power lines, trees, and bodies of water.
4. Minimize interference by avoiding areas with high levels of electromagnetism, including base stations and radio transmission towers.
5. Aircraft and battery performance is subject to environmental factors such as air density and temperature. Be very careful when flying at altitudes greater than 19, 685 feet (6000 meters) above sea level, as the performance of the battery and aircraft may be affected.
6. The Phantom 4 Pro / Pro+ cannot operate within the polar areas.

Flight Limits and No-Fly Zones

All unmanned aerial vehicle (UAV) operators should abide by all regulations set forth by government and regulatory agencies including the ICAO and the FAA. For safety reasons, flights are limited by default, which helps users operate this product safely and legally. Flight limitations include height limits, distance limits, and No-Fly Zones.

When operating in P-mode, height limits, distance limits, and No-Fly Zones function concurrently to manage flight safety. In A-mode, only height limits are in effect, which by default prevent the aircraft altitude from exceeding 1640 feet (500 m) .

Maximum flight altitude & Radius Limits

Maximum flight altitude and radius limits may be changed in the DJI GO app. Be aware that the maximum flight altitude cannot exceed 1640 feet (500 meters). In accordance with these settings, your Phantom 4 Pro / Pro+ will fly in a restricted cylinder, as shown below:

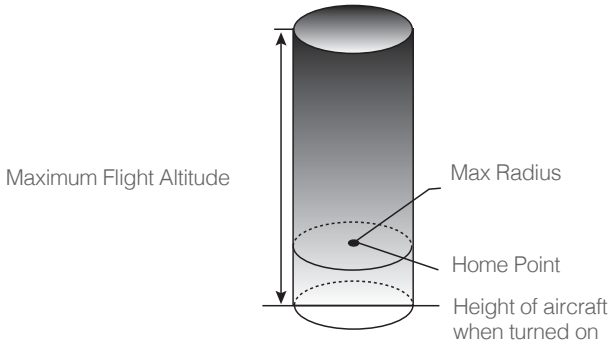

© 2016 DJI. All Rights Reserved.

GPS Signal Strong Ⓖ ····· Blinking Green			
	Flight Limits	DJI GO app	Aircraft Status Indicator
Maximum Flight Altitude	Aircraft's altitude cannot exceed the specified value.	Warning: Height limit reached.	None.
Max Radius	Flight distance must be within the max radius.	Warning: Distance limit reached.	Rapid red flashing Ⓡ ····· when close to the max radius limit.

GPS Signal Weak Ⓨ ····· Blinking Yellow			
	Flight Limits	DJI GO app	Aircraft Status Indicator
Maximum Flight Altitude	Height is restricted to 26 feet (8 meters)when the GPS signal is weak and Vision Positioning is activated. Height is restricted to 164 feet (50 meters) when the GPS signal is weak and Vision Positioning is inactivated.	Warning: Height limit reached.	None.
Max Radius	No limits		

⚠
- If the aircraft flies out of the limit, you can still control the aircraft, but you cannot fly it any farther.
- If the aircraft flies out of the max radius it will fly back within range automatically when GPS signal is strong.

No-Fly Zones

All No-Fly Zones are listed on the DJI official website at http://www.dji.com/flysafe/no-fly. No-Fly Zones are divided into Airports and Restricted Areas. Airports include major airports and flying fields where manned aircraft operate at low altitudes. Restricted Areas include border lines between countries or sensitive institute. The details of the No-Fly Zones are explained as follow:

Airport

(1) Airport No-Fly Zone are comprised of Take-off Restricted zones and Restricted Altitude Zones. Each zone features circles of various sizes.
(2) R1 miles (value of the R1 depends on the size and shape of the airport) around the airport is a Take-off restricted zone, inside of which take off is prevented.
(3) From R1 mile to R1 + 1 mile around the airport the flight altitude is limited to a 15 degree inclination. Starting at 65 feet (20 meters) from the edge of airport and radiating outward. The flight altitude is limited to 1640 feet (500 meters) at R1+1 mile
(4) When the aircraft enters within 320 feet (100 meters) of No-Fly Zones, a warning message will appear on the DJI GO app.

 © 2016 DJI. All Rights Reserved.

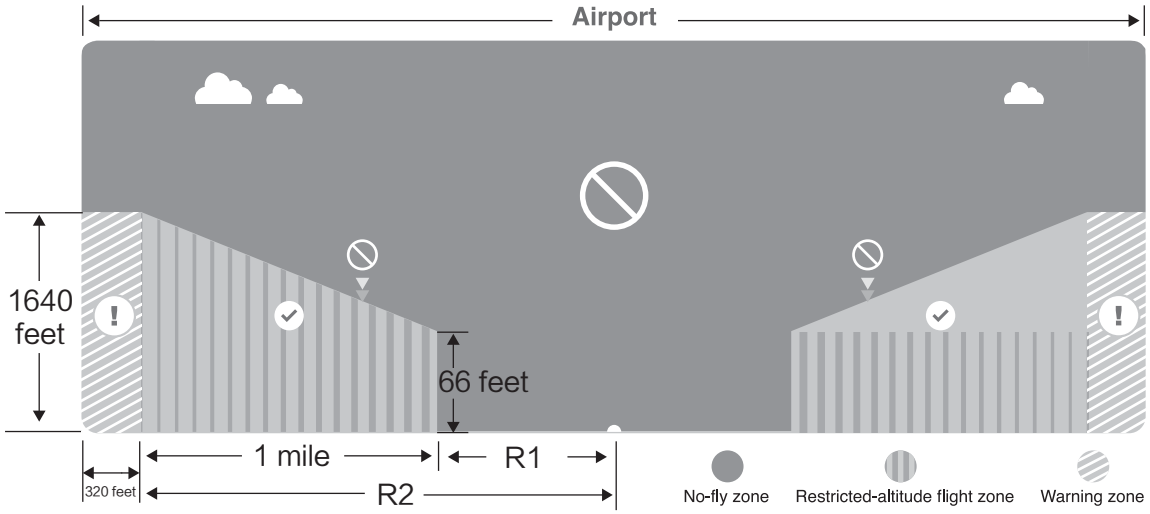

Restricted Area

(1) Restricted Areas does not have flight altitude restrictions.

(2) R miles around the designated restriction area is a Take-off Restricted area. Aircraft cannot take off within this zone. The value of R varies based on the definition of the restricted areas.

(3) A “warning zone” has been set around the Restricted Area. When the aircraft approaches within 0.062 miles (100 m) of this zone, a warning message will appear on the DJI GO app.

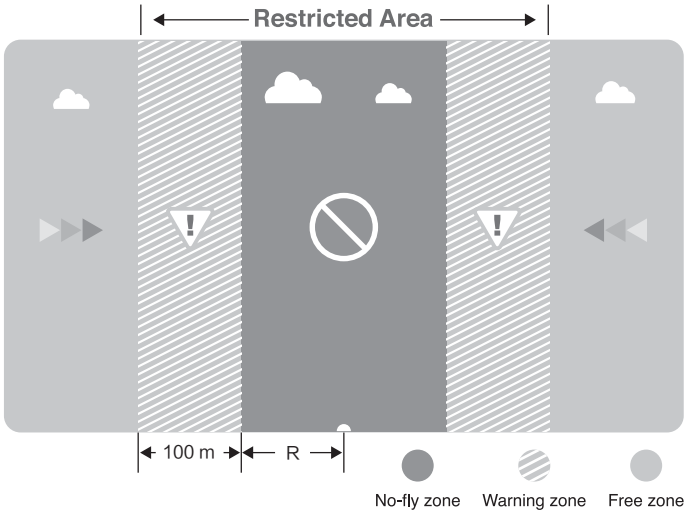

© 2016 DJI. All Rights Reserved.

GPS Signal Strong Ⓖ ····· Blinking Green			
Zone	Restriction	DJI GO app Prompt	Aircraft Status Indicator
No-fly Zone	Motors will not start.	Warning: You are in a No-fly zone. Take off prohibited.	Ⓡ ····· Red flashing
	If the aircraft enters the restricted area in A-mode, but is switched to P-mode, the aircraft will automatically descend, land, and stop its motors.	Warning: You are in a no-fly zone. Automatic landing has begun.	
Restricted-altitude flight zone	If the aircraft enters the restricted area in A-mode, but is switched to P-mode, it will descend to an appropriate altitude and hover 15 feet below the altitude limit.	R1: Warning: You are in a restricted zone. Descending to safe altitude. R2: Warning: You are in a restricted zone. Maximum flight altitude is restricted to between 20m and 500m. Fly cautiously.	
Warning zone	No flight restriction applies, but there will be a warning .	Warning: You are approaching a restricted zone, Fly cautiously.	
Free zone	No restrictions.	None.	None.

Semi-automatic descent: All stick commands are available except the left stick command during the descent and landing process. Motors will stop automatically after landing.

- When flying in a safety zone, the aircraft's status indicator will blink red rapidly and continue for 3 seconds, then switch to indicate current flying status and continue for 5 seconds at which point it will switch back to blinking red.
- For safety reasons, please do not fly close to airports, highways, railway stations, railway lines, city centers, or other sensitive areas. Fly the aircraft only within your line of sight.

Preflight Checklist

1. Remote controller, Intelligent Flight Battery, and mobile device are fully charged.
2. Propellers are mounted correctly and firmly.
3. Micro SD card has been inserted, if necessary.
4. Gimbal is functioning normally.
5. Motors can start and are functioning normally.
6. The DJI GO app is successfully connected to the aircraft.
7. Ensure that the sensors for the Obstacle Sensing System are clean.

 © 2016 DJI. All Rights Reserved.

Calibrating the Compass

Only calibrate the compass when the DJI GO app or the status indicator prompt you to do so. Observe the following rules when calibrating your compass:

- DO NOT calibrate your compass where there is a chance of strong magnetic interference, such as magnetite, parking structures, and steel reinforcements underground.
- DO NOT carry ferromagnetic materials with you during calibration such as cellular phones.
- The DJI GO app will prompt you to resolve the compass issue if the compass is affected by strong interference after calibration is complete. Follow the prompted instructions to resolve the compass issue.

Calibration Procedures

Choose an open area to carry out the following procedures.

1. Ensure that the compass is calibrated. If you did not calibrate the compass as part of your pre-flight preparations, or if you have moved to a new location since the last calibration, tap the Aircraft Status Bar in the app and select “Calibrate”, then follow the on-screen instructions.
2. Hold the aircraft horizontally and rotate 360 degrees. The Aircraft Status Indicators will display a solid green light.

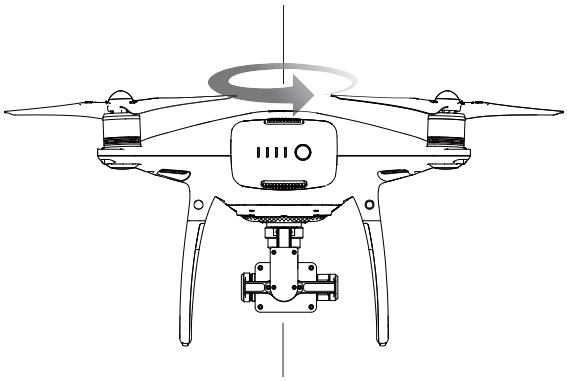

3. Hold the aircraft vertically, with nose pointing downward, and rotate it 360 degrees around the center axis. Recalibrate the compass if the Aircraft Status Indicator glows solid red.

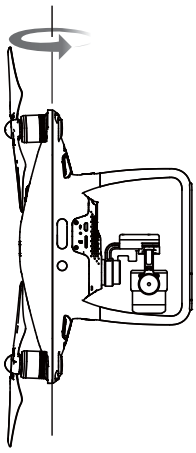

© 2016 DJI. All Rights Reserved.

4. Re-calibrate the aircraft if the aircraft status indicators blink red.

- If the Aircraft Status Indicator blinks red and yellow after the calibration procedure, move your aircraft to a different location and try again.

- Calibrate the compass before each flight. Launch the DJI GO app and follow the on-screen instructions to calibrate the compass. DO NOT calibrate the compass near metal objects such as a metal bridge, cars, scaffolding.
- If the aircraft status indicators is blinking red and yellow alternately after placing the aircraft on the ground, the compass has detected magnetic interference. Change your location.

When to Recalibrate

1.When compass data is abnormal and the Aircraft Status Indicator is blinking green and yellow.
2.When flying in a new location or in a location that is different from the most recent flight.
3.When the mechanical or physical structure of the Phantom 4 Pro / Pro+ has been changed.
4.When severe drifting occurs in flight, i.e. Phantom 4 Pro / Pro+ does not fly in straight line.

Auto Takeoff and Auto Landing

Auto Takeoff

Use auto takeoff only if the Aircraft Status Indicators are blinking green. Follow the steps below to use the auto takeoff feature:

1. Launch the DJI GO app, and enter “Camera” page.
2. Complete all steps on the pre-flight checklist.
3. Tap“ ”, and confirm that conditions are safe for flight. Slide the icon to confirm and takeoff.
4. Aircraft takes off and hovers at (1.2 meters) above ground.

Aircraft Status Indicator blinks rapidly when it is using the Vision Position System for stabilization. The aircraft will automatically hover below 3 meters. It is recommended to wait until there is sufficient GPS lock before using the Auto Take-off feature.

Auto-Landing

Use auto-landing only if the Aircraft Status Indicators are blinking green. Follow the steps below to use the auto-landing feature:

1. Check the landing area condition before tapping “ ”. Slide the icon to confirm landing. Then follow the on-screen instructions.

 © 2016 DJI. All Rights Reserved.

Starting/Stopping the Motors

Starting the Motors

A Combination Stick Command (CSC) is used to start the motors. Push both sticks to the bottom inner or outer corners to start the motors. Once the motors have started spinning, release both sticks simultaneously.

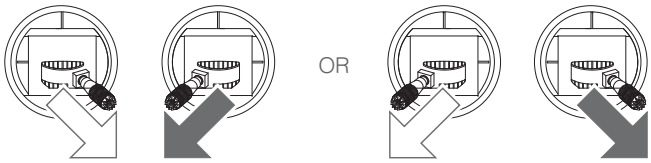

Stopping the Motors

There are two methods to stop the motors.
Method 1: When Phantom 4 Pro / Pro+ has landed, push the left stick down ①, then conduct the same CSC that was used to start the motors, as described above ②. Motors will stop immediately. Release both sticks once motors stop.
Method 2: When the aircraft has landed, push and hold the left stick down. The motors will stop after three seconds.

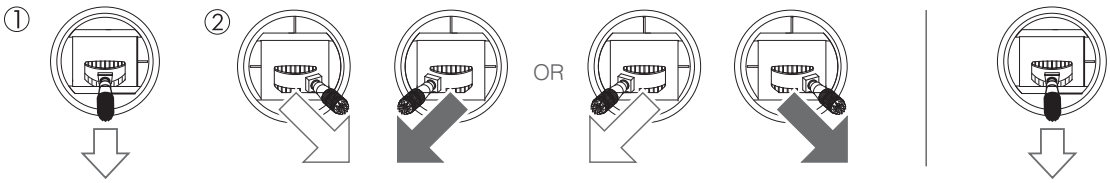

Method 1 Method 2

Stop the motor mid-flight

Pull the left stick to the bottom inside corners and press the RTH button at the same time. **Only stop the motors mid-flight in emergency situations when doing so can reduce the risk of damage or injury. Refer to the user manual for details.**

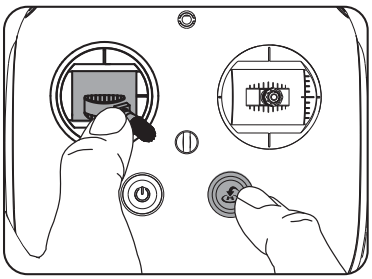

© 2016 DJI. All Rights Reserved.

Flight Test

Takeoff/Landing Procedures

1. Place the aircraft in an open, flat area with the battery level indicators facing towards you.
2. Turn on the remote controller and your mobile device, then turn on the Intelligent Flight Battery.
3. Launch the DJI GO app and enter the Camera page.
4. Wait until the Aircraft Indicators blink green. This means the Home Point is recorded and it is now safe to fly. If they flash yellow, the Home Point has not been recorded.
5. Push the left stick up slowly to take off or use Auto Takeoff.
6. Shoot photos and videos using the DJI GO app.
7. To land, hover over a level surface and gently pull down on the left stick to descend.
8. After landing, execute the CSC command or hold the left stick at its lowest position until the motors stop.
9. Turn off the Intelligent Flight Battery first, then the Remote Controller.

⚠
- When the Aircraft Status Indicators blink yellow rapidly during flight, the aircraft has entered Failsafe mode.
- A low battery level warning is indicated by the Aircraft Status Indicators blinking red slowly or rapidly during flight.
- Watch our video tutorials for more flight information.

Video Suggestions and Tips

1. Go through the full pre-flight checklist before each flight.
2. Select the desired gimbal operation mode in the DJI GO app.
3. Only shoot video when flying in P-mode.
4. Always fly in good weather and avoid flying in rain or heavy wind.
5. Choose the camera settings that suit your needs. Settings include photo format and exposure compensation.
6. Perform flight tests to establish flight routes and preview scenes.
7. Push the control sticks gently to keep the aircraft's movement smooth and stable.

 © 2016 DJI. All Rights Reserved.

Appendix

© 2016 DJI. All Rights Reserved.

Appendix

Specifications

Aircraft	
Weight (Battery & Propellers Included)	1380 g
Diagonal Size (Excluding Propellers)	350 mm
Max Ascent Speed	Sport mode: 19.7ft/s(6 m/s); GPS mode: 16.4ft/s(5 m/s)
Max Descent Speed	Sport mode: 13.1ft/s(4 m/s); GPS mode: 9.8ft/s (3 m/s)
Max Speed	44.7mph (20 m/s); 35.8mph (16 m/s) (Attitude mode); 31.3mph(14 m/s) (GPS mode)
Max Tilt Angle	42° (Sport mode); 35° (Attitude mode); 25° (GPS mode)
Max Angular Speed	250°/s (Sport mode); 150°/s (Attitude mode)
Max Service Ceiling Above Sea Level	6000 m
Max Flight Time	Approx. 29 minutes
Operating Temperature Range	32° to 104° F (0° to 40° C)
Satellite Systems	GPS/GLONASS
GPS Hover Accuracy Range	Vertical: ±0.1 m (With Vision Positioning); ±0.5 m (With GPS Positioning) Horizontal: ±0.3 m (With Vision Positioning); ±1.5 m (With GPS Positioning)
Gimbal	
Stabilization	3-axis (pitch, roll, yaw)
Controllable Range	Pitch: - 90° to + 30°
Max Controllable Angular Speed	Pitch: 90°/s
Angular Control Accuracy	±0.03°
Vision Positioning System	
Velocity Range	≤14 m/s (2 m above ground)
Altitude Range	0 - 33 feet (0 - 10 m)
Operating Range	0 - 33 feet (0 - 10 m)
Measuring Frequency	10 Hz
Operating Environment	Surface with clear pattern and adequate lighting (lux > 15)
Obstacle Sensing System	
Obstacle Sensory Range	Front and Rear: 2 - 98 feet (0.7 - 30 m) Both Sides: 0 - 22 feet (0.2 - 7 m)
FOV	Front and Rear:±60°(Horizontal),±54°(Vertical) Both Sides: ±35°(Horizontal),±10°(Vertical)
Measuring Frequency	10 Hz
Operating Environment	Front and Rear: Surface with clear pattern and adequate lighting (lux > 15) Both Sides: Wall, trees, humans

 © 2016 DJI. All Rights Reserved.

Camera	
Sensor	1'' CMOS; Effective pixels: 20 M
Lens	FOV (Field Of View) 84° 24 mm (35 mm format equivalent) f/2.8 - f/11 auto focus at 1 m - ∞
ISO Range	Video: 100 – 3200 (Auto); 100 - 6400 (Manual) Photo:100 - 3200 (Auto);100 - 12800(Manual)
Mechanical Shutter	8 - 1/2000 s
Electronic Shutter Speed	8 - 1/8000 s
Max Image Size	3:2 Aspect Ratio: 5472×3648 4:3 Aspect Ratio: 4864×3648 16:9 Aspect Ratio: 5472×3078
PIV Image Size	16:9 Aspect Ratio: • 5248×2952 (3840×2160 24/25/30p, 2720×1530 24/25/30p, 1920×1080 24/25/30p, 1280×720 24/25/30p) • 3840×2160 (3840×2160 48/50p, 2720×1530 48/50p, 1920×1080 48/50/60p, 1280×720 48/50/60p) 17:9 Aspect Ratio: • 4896×2592 (4096×2160 24/25/30p) • 4096×2160 (4096×2160 48/50p)
Still Photography Modes	Single shot Burst shooting: 3/5/7/10/14 frames Auto Exposure Bracketing (AEB): 3/5 Bracketed frames at 0.7EV Bias Time-lapse (interval: 2/3/5/7/10/15/30/60)
Video Recording Modes	H.265 • UHD: 4096×2160 24/25/30p @100Mbps • UHD: 3840×2160 24/25/30p @100Mbps • UHD: 2720×1530 24/25/30p @65Mbps 2720×1530 48/50/60p @80Mbps • FHD: 1920×1080 24/25/30p @50Mbps 1920×1080 48/50/60p @65Mbps • HD: 1280×720 24/25/30p @25Mbps 1280×720 48/50/60p @35Mbps H.264 • UHD: 4096×2160 24/25/30/48/50/60p @100Mbps • UHD: 3840×2160 24/25/30/48/50/60p @100Mbps • UHD: 2720×1530 24/25/30p @80Mbps 2720×1530 48/50/60p @100Mbps • FHD: 1920×1080 24/25/30p @60Mbps 1920×1080 48/50/60/120p @80Mbps • HD: 1280×720 24/25/30p @30Mbps 1280×720 48/50/60/120p @45Mbps

© 2016 DJI. All Rights Reserved.

Max. Bitrate Of Video Storage	100 Mbps
Supported File Systems	FAT32 (≤ 32 GB); exFAT (> 32 GB)
Photo	JPEG, DNG (RAW), J+R
Video	MP4/MOV (AVC/H.264; HEVC/H.265)
Supported SD Cards	Micro SD, Max capacity: 128GB. Class 10 or UHS-1 rating required
Operating Temperature Range	32° to 104° F (0° to 40° C)

Remote Controller	
Operating Frequency	2.400 - 2.483 GHz, 5.15-5.25GHz and 5.725 - 5.850 GHz
Max Transmission Distance	FCC Compliant: 3.1 mi (5 km); CE Compliant: 2.2 mi (3.5 km) (Unobstructed, free of interference)
Operating Temperature	32° to 104° F (0° to 40° C)
Battery	6000 mAh LiPo 2S
Transmitter Power	For GL300E 2.400-2483GHz FCC:23.2 dBm CE: 17dBm 5.15-5.250GHz&5.725-5.850GHz FCC: 24.5 dBm CE: 14dBm For GL300F 2.400-2483GHz FCC: 23.2dBm CE:17dBm 5.725-5.850GHz FCC: 22.5dBm CE: 14dBm
Operating Voltage	1.2 A @7.4 V
Video Output Port	GL300E: USB GL300F: HDMI, USB
Mobile Device Holder	GL300E: Tablets and smartphones GL300F: Built-in Display device
Charger	
Voltage	17.4 V
Rated Power	100 W
Intelligent Flight Battery (PH4-5870 mAh-15.2 V)	
Capacity	5870 mAh
Voltage	15.2 V
Battery Type	LiPo 4S
Energy	89.2 Wh
Net Weight	468 g
Operating Temperature	14° to 104° F (-10° to 40° C)
Max. Charging Power	100 W

Aircraft Status Indicator Description

Normal	
Ⓡ Ⓖ Ⓨ ····· Red, Green and Yellow Flash Alternatively	Turning on and Self-Diagnostics
Ⓖ Ⓨ ····· Green and Yellow Flash Alternatively	Aircraft Warming Up
Ⓖ ····· Green Flashes Slowly	Ready to go (P-mode with GPS and Vision Positioning)
Ⓖ X2 ····· Green Flashes Twice	Ready to go (P-mode with Vision Positioning but without GPS)
Ⓨ ····· Yellow Flashes Slowly	Ready to go (A-mode but No GPS and Vision Positioning)

 © 2016 DJI. All Rights Reserved.

Warning	
Ⓨ ····· Fast Yellow Flashing	Remote Controller Signal Lost
Ⓡ ····· Slow Red Flashing	Low Battery Warning
Ⓡ ····· Fast Red Flashing	Critical Battery Warning
Ⓡ ····· Red Flashing Alternatively	IMU Error
Ⓡ —— Solid Red	Critical Error
Ⓡ Ⓨ ····· Red and Yellow Flash Alternatively	Compass Calibration Required

Firmwares Update

Use DJI Assistant 2 or DJI GO app to update aircraft and Remote Controller. Follow the instructions below to update the firmware through DJI Assistant 2:

1. Power on your aircraft and connect it to a computer with a USB cable.
2. Launch DJI Assistant 2 and login with your DJI account.
3. Select “Phantom 4 Pro / Pro+” and click the “Firmware Updates” on the left panel.
4. Select the firmware version that you wish to update.
5. DJI Assistant 2 will download and update the firmware automatically.
6. Reboot the aircraft after the firmware update is complete.

- The firmware update will take around 15 minutes. It is normal that the gimbal go limp, aircraft status indicator blinks abnormally and the aircraft reboots. Please wait patiently until the update is complete.
- There will be no sound prompts during the update.
- Ensure the computer has access to the Internet.
- Ensure the battery level is adequate for the Intelligent Flight Battery.
- Do not disconnect the aircraft from the computer during firmware update.

Intelligent Flight Mode

Intelligent Flight mode includes Course Lock, Home Lock, Point of Interest (POI), Follow Me and Waypoints features to assist users to capture professional shoots during the flight. Course Lock and Home Point lock ensure the lock of aircraft orientation, sparing the user to focus more on other operations. Point of Interest, Follow Me and Waypoints mode enable aircraft to fly automatically according to the pre-set flight maneuvers.

Course Lock	Lock the current nose direction as the aircraft’s forward direction. The aircraft will move in the locked directions regardless of its orientation (yaw angle).
Home Lock	Pull the pitch stick backward to move the aircraft toward its recorded Home Point.
Point of Interest	The aircraft will orbit around the subject automatically to allow the operator to be more focus on framing their shoot on the subject in Point of Interest.

© 2016 DJI. All Rights Reserved.

Follow Me	A virtual tether is created between the aircraft and the mobile device so that the aircraft can track your movement as you move. Note that Follow Me performance is subject to the GPS accuracy on the mobile device.
Waypoints	Record a flight path, then the aircraft will fly along the same path repeatedly while you control the camera and orientation. The flight path can be saved and re-apply in the future.

After-Sales Information

Visit the following pages to learn more about After-sales policy and warranty information:

1. After-sales Policy: http://www.dji.com/service
2. Refund Policy: http://www.dji.com/service/refund-return
3. Paid Repair Service: http://www.dji.com/service/repair-service
4. Warranty Service: http://www.dji.com/service/warranty-service

FCC Compliance

FCC Warning Message

Any changes or modifications not expressly approved by the party responsible for compliance could void the user's authority to operate the equipment.
This device complies with part 15 of the FCC Rules. Operation is subject to the following two conditions: (1) This device may not cause harmful interference, and (2) this device must accept any interference received, including interference that may cause undesired operation.

FCC Radiation Exposure Statement:

For Phantom 4 Pro / WM331A
This equipment complies with FCC radiation exposure limits set forth for an uncontrolled environment. This equipment should be installed and operated with minimum distance 20cm between the radiator& your body. This transmitter must not be co-located or operating in conjunction with any other antenna or transmitter.

For remote control with model GL300E and GL300F ,SAR tests are conducted using standard operating positions accepted by the FCC/IC with the device transmitting at its highest certified power level in all tested frequency bands, although the SAR is determined at the highest certified power level, the actual SAR level of the device while operating can be well below the maximum value. Before a new model is a available for sale to the public, it must be tested and certified to the FCC/IC that it does not exceed the exposure limit established by the FCC/IC, Tests for each product are performed in positions and locations as required by the FCC/IC.
For Handheld operation, this device has been tested and meets the FCC/IC RF exposure guidelines when used with an accessory designated for this product or when used with an accessory that Contains no metal.

Note: This equipment has been tested and found to comply with the limits for a Class B digital device, pursuant to part 15 of the FCC Rules. These limits are designed to provide reasonable protection against harmful interference in a residential installation. This equipment generates uses and can radiate radio frequency energy and, if not installed and used in accordance with the instructions, may cause harmful interference to radio communications. However, there is no guarantee that interference will not occur in

 © 2016 DJI. All Rights Reserved.

a particular installation. If this equipment does cause harmful interference to radio or television reception, which can be determined by turning the equipment off and on, the user is encouraged to try to correct the interference by one or more of the following measures:
—Reorient or relocate the receiving antenna.
—Increase the separation between the equipment and receiver.
—Connect the equipment into an outlet on a circuit different from that to which the receiver is connected.
—Consult the dealer or an experienced radio/TV technician for help.

IC RSS warning

This device complies with Industry Canada licence-exempt RSS standard (s). Operation is subject to the following two conditions: (1) this device may not cause interference, and (2) this device must accept any interference, including interference that may cause undesired operation of the device.
Le présent areil est conforme aux CNR d'Industrie Canada licables aux areils radio exempts de licence.

L'exploitation est autorisée aux deux conditions suivantes:
(1) l'areil ne doit pas produire de brouillage, et
(2) l'utilisateur de l'areil doit accepter tout brouillage radioélectrique subi, même si le brouillage est susceptible d'en compromettre le fonctionnement.

IC Radiation Exposure Statement:

For Phantom 4 Pro / WM331A
This equipment complies with IC RF radiation exposure limits set forth for an uncontrolled environment. This transmitter must not be co-located or operating in conjunction with any other antenna or transmitter.
This equipment should be installed and operated with minimum distance 20cm between the radiator& your body.
Any Changes or modifications not expressly approved by the party responsible for compliance could void the user's authority to operate the equipment.

KCC Warning Message

"해당무선설비는 운용 중 전파혼신 가능성이 있으므로 인명안전과 관련된 서비스는 할 수 없습니다 ."
"해당 무선설비는 운용 중 전파혼신 가능성이 있음"

NCC Warning Message

低功率電波輻射性電機管理辦法
第十二條經型式認證合格之低功率射頻電機，非經許可，公司、商號或使用者均不得擅自變更頻率、加大功率或變更原設計之特性及功能。
第十四條低功率射頻電機之使用不得影響飛航安全及干擾合法通信；經發現有干擾現象時，應改善至無干擾時方得繼續使用。前項合法通信，指依電信法規定作業之無線電通信。低功率射頻電機須忍受合法通信或工業、科學及醫療用電波輻射性電機設備之干擾。

HDMI™
HIGH-DEFINITION MULTIMEDIA INTERFACE

DJI incorporates HDMI™ technology.
The terms HDMI and HDMI High-Definition Multimedia Interface, and the HDMI Logo are trademarks or registered trademarks of HDMI Licensing LLC in the United States and other countries.

© 2016 DJI. All Rights Reserved.

DJI Support
http://www.dji.com/support

This content is subject to change.

Download the latest version from
http://www.dji.com/product/phantom-4

If you have any questions about this document, please contact DJI by sending a message to **DocSupport@dji.com**.

PHANTOM™ is a trademark of DJI.
Copyright © 2016 DJI All Rights Reserved.