PHANTOM 4 PRO/PRO+

User Manual V1.0

2016.10

Searching for Keywords

Search for keywords such as “battery” and “install” to find a topic. If you are using Adobe Acrobat Reader to read this document, press Ctrl+F on Windows or Command+F on Mac to begin a search.

Navigating to a Topic

View a complete list of topics in the table of contents. Click on a topic to navigate to that section.

Printing this Document

This document supports high resolution printing.

Using this manual

Legends

Warning Important Hints and Tips Reference

Read Before the First Flight

Read the following documents before using the PHANTOM™ 4 Pro / Pro+:

1. In the Box
2. Phantom 4 Pro / Pro+ User Manual
3. Phantom 4 Pro / Pro+ Quick Start Guide
4. Phantom 4 Pro / Pro+ Series Disclaimer and Safety Guidelines
5. Phantom 4 Pro / Pro+ Series Intelligent Flight Battery Safety Guidelines

We recommend that you watch all tutorial videos on the official DJI™ website and read the Disclaimer before you fly. Prepare for your first flight by reviewing the Phantom 4 Pro / Pro+ Quick Start Guide and refer to the User Manual for more details.

Watch the Tutorial Videos

Please watch the tutorial videos at the link below, which demonstrates how to use Phantom 4 Pro / Pro+ safely:

http://www.dji.com/product/phantom-4-pro/info#video

Download the DJI GO App

Ensure to use the DJI GO app during the flight. Scan the QR code on the right to download the latest version.

The Android version of the DJI GO app is compatible with Android 4.1.2 or later.
The iOS version of the DJI GO app is compatible with iOS 8.0 or later.

 © 2016 DJI. All Rights Reserved.

Contents

Using this manual 2

Legends 2

Read Before the First Flight 2

Video Tutorials 2

Download the DJI GO App 2

Product Profile 6

Introduction 6

Features Highlights 6

Preparing the Aircraft 6

Aircraft Diagram 8

Remote Controller Diagram 8

Aircraft 11

Flight Controller 11

Flight Mode 11

Flight Status Indicator 12

Return-to-Home (RTH) 13

TapFly 16

ActiveTrack 18

Obstacle and Vision Positioning System 20

Detection Range 21

Calibrating Front Sensors 21

Flight Recorder 23

Attaching and Detaching the Propellers 23

DJI Intelligent Flight Battery 24

Remote Controller 30

Remote Controller Profile 30

Using the Remote Controller 30

Remote Controller Status LED 34

Linking the Remote Controller 35

Camera and Gimbal 38

Camera Profile 38

Gimbal 39

© 2016 DJI. All Rights Reserved.

DJI GO App 42
Equipment 42
Editor 45
SkyPixel 45
Me 45

Flight 47
Flight Environment Requirements 47
Flight Limits and No-Fly Zones 47
Preflight Checklist 50
Calibrating the Compass 51
Auto Takeoff and Auto Landing 52
Starting/Stopping the Motors 53
Stop the motor mid-flight 53
Flight Test 54

FAQ 56

Appendix 60
Specifications 60
Aircraft Status Indicator Description 61
Firmwares Update 62
Intelligent Flight Mode 62
After-Sales Information 63
FCC Compliance 63

 © 2016 DJI. All Rights Reserved.

Product Profile

This section introduces the Phantom 4 Pro / Pro+ and lists the components of the aircraft and remote controller.

© 2016 DJI. All Rights Reserved.

Product Profile

Introduction

The DJI Phantom 4 Pro / Pro+ is an extremely smart flying camera with its advanced vision positioning and obstacle sensing system able to intelligently avoid obstacles during the flight. Its brand new camera gives you unprecedentedly greater clarity, lower noise, and better pictures. Dual frequency makes the HD video downlink more efficient and stable.

Features Highlights

Empowered by the latest Tapfly and ActiveTrack commands in the DJI GO app, Phantom 4 Pro / Pro+ enables you to fly anywhere visible on your screen or track a moving subject effortlessly.

Camera and Gimbal: With the Phantom 4 Pro / Pro+, you're shooting 4K video at up to 60 frames per second and capturing 20 megapixel photos that look crisper and cleaner than ever attributed to its up-to-date 1-inch CMOS Exmor R sensor. The latest mechanical shutter and auto focus are available for a better aerial shooting experience.

Flight Controller: The next-generation flight controller has been updated to provide a safer, more reliable flight experience. A newly implemented flight recorder stores critical data from each flight and the Vision Positioning System enhances hovering precision when flying indoors or in environments where GPS is unavailable. A dual IMUs and compasses design provides redundancy to the aircraft.

HD Video Downlink: The low-latency long range (up to 5 km) HD downlink is powered by an enhanced version of DJI Lightbridge. A free switch between 2.4 GHz and 5.8 GHz allows interference decreasing, which make the HD video downlink more stable.

Remote Controller: Phantom 4 Pro+ is provided with a 5.5 inch high luminance screen, with DJI GO and other apps, you can easily share your artwork.

Intelligent Flight Battery: The new 5870 mAh DJI Intelligent Flight Battery features upgraded battery cells and an advanced power management system to provide flight at up to around 30 minutes*.

Installing the Aircraft

Preparing the Aircraft

1. Remove the gimbal clamp from the camera as shown below:

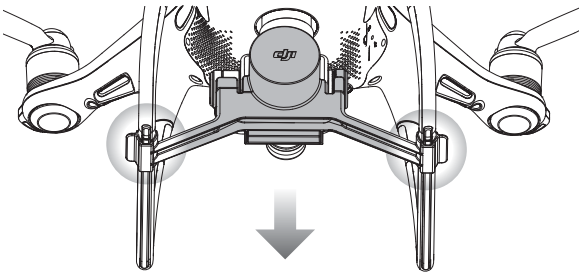

*At sea level in calm environments when flying in ATTI mode, The flight time will vary due to different flight patterns, weather conditions and altitudes.

 © 2016 DJI. All Rights Reserved.

2. Attaching the Propellers

Mount the propellers with black propeller rings to the motors with black dots. Mount the propellers with sliver propeller rings to the motors without black dots. Press the propeller down onto the mounting plate and rotate in the lock direction until it is secured in its position.

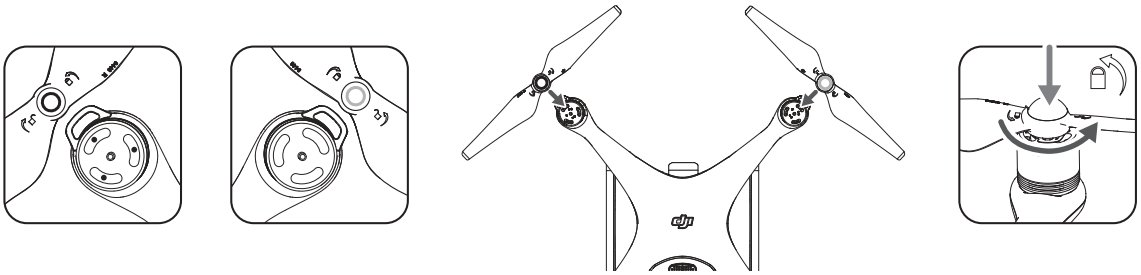

⚠ Check that all the propellers are secure before each flight.

3. Battery Installation

Slide battery into the battery compartment according to the arrow's direction as shown below.

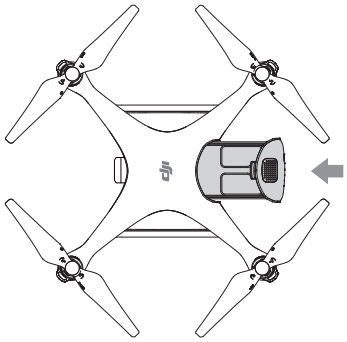

⚠ Make sure that you hear a click sound indicates the battery is firmly installed. Failure to do so may affect the flight safety of your aircraft.

Preparing the Remote Controller

The mobile device holder is designed for securing tablet or mobile device. Tilt the mobile device holder to the desired position, then adjust the antennas so they are facing outward.

1. Press the button on the top right side of the mobile device holder to release the clamp, then adjust the clamp to fit the size of your mobile device.
2. Secure your mobile device in the clamp by pressing down, and connect your mobile device to the remote controller using a USB cable.
3. Plug one end of the cable into the mobile device, and the other end into the USB port on the back of the remote controller.

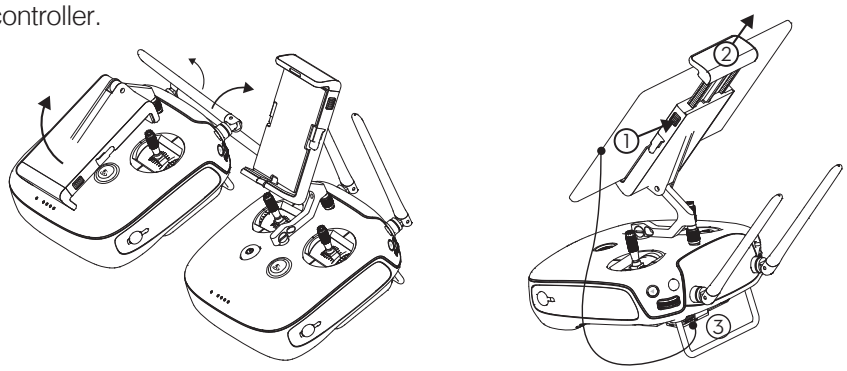

© 2016 DJI. All Rights Reserved.

Aircraft Diagram

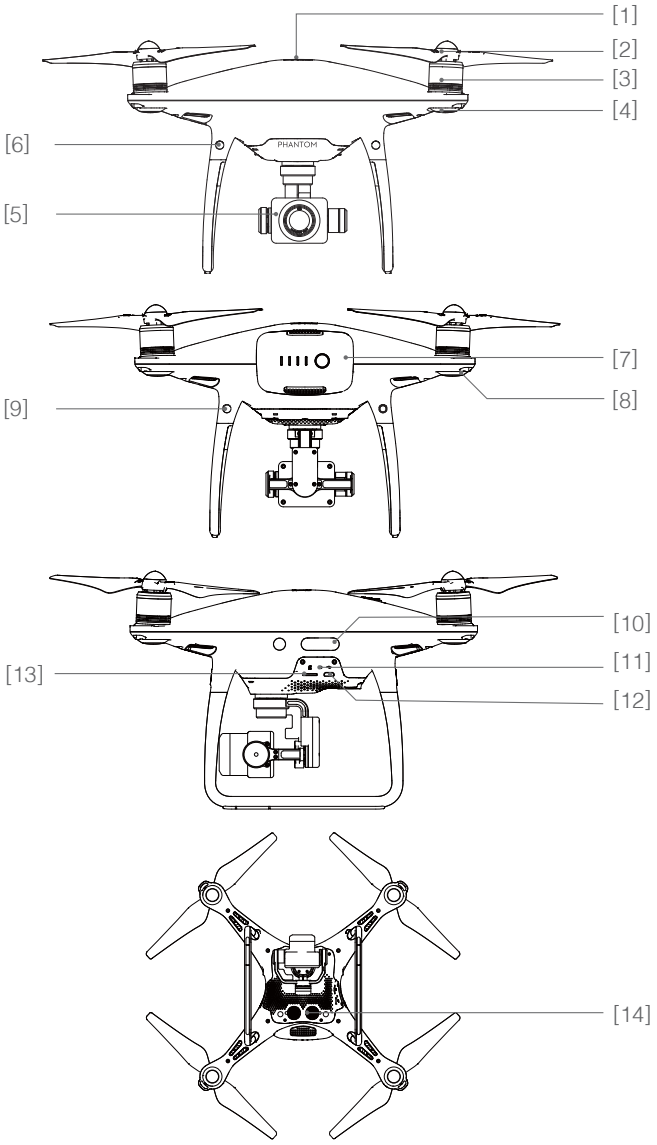

[1] GPS

[2] Propeller

[3] Motors

[4] Front LED Indicator

[5] Gimbal and Camera

[6] Vision Positioning and Obstacle Sensing System (Front)

[7] Intelligent Flight Battery

[8] Aircraft Status Indicator

[9] Vision Positioning and Obstacle Sensing System (Rear)

[10] Obstacle Sensing System (Both Sides)

[11] Camera / Linking Status Indicator and Link Button

[12] Micro USB Port

[13] Camera Micro SD Card Slot

[14] Vision Positioning System (Bottom)

Remote Controller Diagram (GL300E)

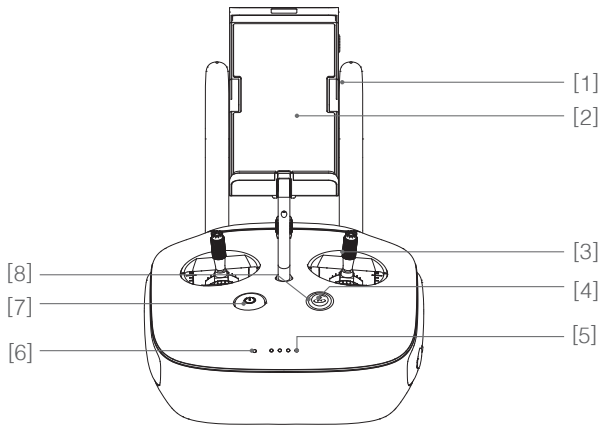

[1] Antennas

Relays aircraft control and video signal.

[2] Mobile Device Holder

Securely mounts your mobile device to the remote controller.

[3] Control Stick

Controls the orientation and movement of the aircraft.

[4] Return Home (RTH) Button

Press and hold the button to initiate Return to Home (RTH).

 © 2016 DJI. All Rights Reserved.

[5] Battery Level LEDs

Displays the battery level of the remote controller.

[6] Status LED

Displays the remote controller's system status.

[7] Power Button

Used to turn the remote controller on and off.

[8] RTH LED

Circular LED around the RTH button displays RTH status.

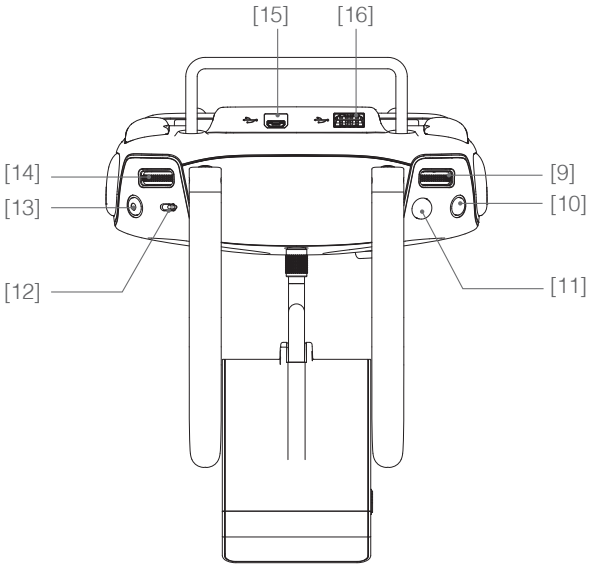

[9] Camera Settings Dial

Turn the dial to adjust camera settings. (Only functions when the remote controller is connected to a mobile device running the DJI GO app.)

[10] Intelligent Flight Pause Button

Press once to allow the aircraft to exit from TapFly, ActiveTrack and Advanced mode.

[11] Shutter Button

Press to take a photo. If burst mode is selected, the set number of photos will be taken with one press.

[12] Flight Mode Switch

Switch between P-mode, S-mode, and A-mode.

[13] Video Recording Button

Press to start recording video. Press again to stop recording.

[14] Gimbal Dial

Use this dial to control the tilt of the gimbal.

[15] Micro USB Port

Reserved port.

[16] USB Port

Connect to mobile device for running the DJI GO app.

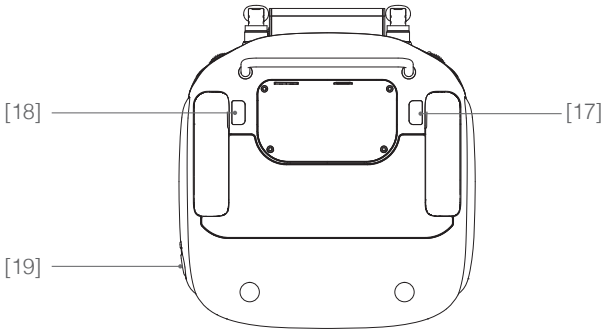

[17] C1 Button

Customizable through the DJI GO app.

[18] C2 Button

Customizable through the DJI GO app.

[19] Power Port

Connect to the Charger to charge the battery of the remote controller.

© 2016 DJI. All Rights Reserved.

Remote Controller Diagram (GL300E)

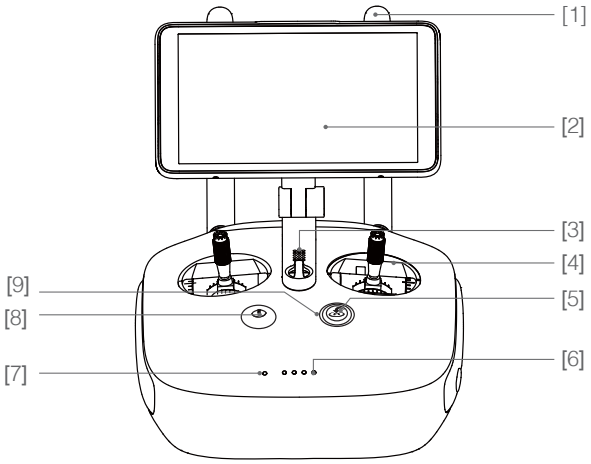

[1] Antennas

Relays aircraft control and video signal.

[2] Display Screen

Display device with Android system to run DJI GO app.

[3] Speaker

Outputs the display device voice.

[4] Control Stick

Controls the orientation and movement of the aircraft.

[5] Return Home (RTH) Button

Press and hold the button to initiate Return to Home (RTH).

[6] Battery Level LEDs

Displays the battery level of the Remote Controller.

[7] Status LED

Displays the Remote Controller's system status.

[8] Power Button

Used to turn the Remote Controller on and off.

[9] RTH LED

Circular LED around the RTH button displays RTH status.

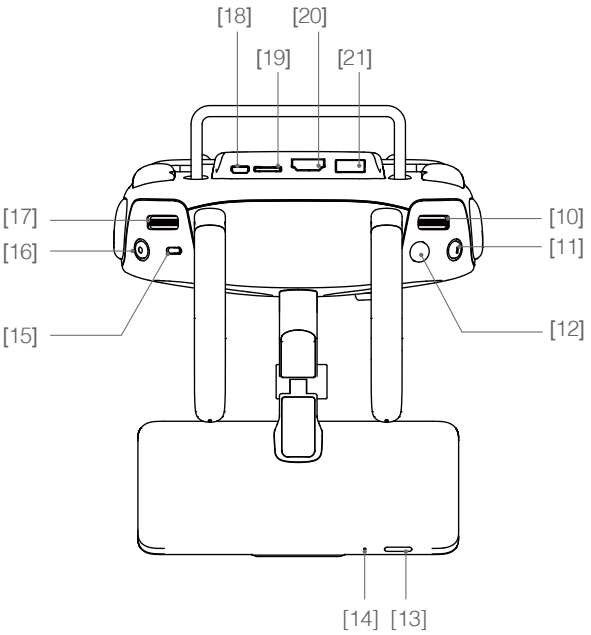

[10] Camera Settings Dial

Turn the dial to adjust camera settings. (Only functions when the Remote Controller is connected to a mobile device running the DJI GO app.)

[11] Intelligent Flight Pause Button

Press once to allow the aircraft to exit from TapFly, ActiveTrack and Advanced mode.

[12] Shutter Button

Press to take a photo. If burst mode is selected, the set number of photos will be taken with one press.

[13] Sleep/Wake button

Press to sleep/wake the screen, press and hold to restart.

 © 2016 DJI. All Rights Reserved.

[14] Microphone

Records during shooting if this function is enabled.

[15] Flight Mode Switch

Switch between P-mode, S-mode, and A-mode.

[16] Video Recording Button

Press to start recording video. Press again to stop recording.

[17] Gimbal Dial

Use this dial to control the tilt of the gimbal.

[18] Micro USB Port

Reserved port.

[19] Micro SD Slot

Provide extra storage space for the display device, maximum supporting 128 GB.

[20] HDMI Port

Output HDMI video signal.

[21] USB Port

Connect to mobile device for running the DJI GO app.

[22] C1 Button

Customizable through the DJI GO app.

[23] C2 Button

Customizable through the DJI GO app.

[24] Power Port

Connect to the Charger to charge the battery of the Remote Controller.

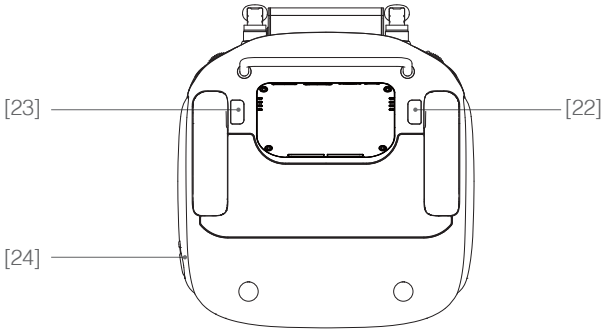

© 2016 DJI. All Rights Reserved.

Aircraft

This section introduces the features of the Flight Controller, Vision Positioning System, and the Intelligent Flight Battery

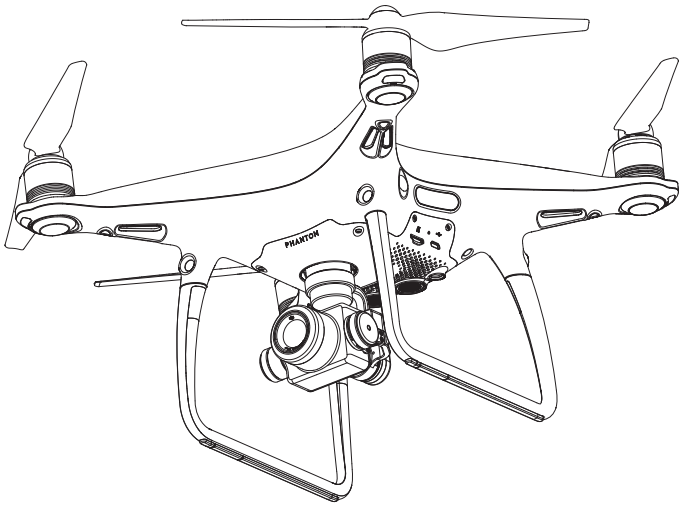

 © 2016 DJI. All Rights Reserved.

Aircraft

Flight Controller

The Phantom 4's Pro / Pro+ flight controller features several important upgrades, including a new flight mode. Safety modes include Failsafe and Return-to-Home. These features ensure the safe return of your aircraft if the control signal is lost. The flight controller can also save critical flight data from each flight to the on-board storage device. The new flight controller also provides increased stability and a new air braking feature.

Flight Mode

Three flight modes are available. The details of each flight mode are found below:

P-mode (Positioning): P-mode works best when the GPS signal is strong. The aircraft utilizes the GPS and Obstacle Sensing System to automatically stabilize itself, navigate between obstacles or track a moving object. Advanced features such as TapFly and ActiveTrack are enabled in this mode.

S-mode (Sport): The handling gain values of the aircraft are adjusted in order to enhance the maneuverability of the aircraft in S-mode. The maximum flight speed of the aircraft is increased to 20 m /s in this mode. Note that Obstacle Sensing system is disabled in this mode.

A-mode (Attitude): When neither the GPS nor the Obstacle Sensing System is available, the aircraft will only use its barometer for positioning to control the altitude.

- **The Obstacle Sensing System is disabled in S-mode (Sport), which means the aircraft will not be able to automatically avoid obstacles in its flight path. Be vigilant and stay clear of nearby obstacles.**
- The aircraft's maximum speed and braking distance are significantly increased in S-mode (Sport). A minimum braking distance of 164 feet (50 meters) is required in windless conditions.
- The aircraft's responsiveness is significantly increased in S-mode (Sport), which means a small stick movement on the remote controller will translate into a large travel distance of the aircraft. Be vigilant and maintain adequate maneuvering space during flight.
- The aircraft's descent speed is significantly increased in S-mode (Sport). A minimum braking distance of 50 meters is required in windless conditions.

- Use the Flight Controller mode switch to change the flight mode of the aircraft, refer to the "Flight Mode Switch" on Page 33 for more information.

© 2016 DJI. All Rights Reserved.

Flight Status Indicator

The Phantom 4 Pro / Pro+ has Front LEDs and Aircraft Status Indicators. The positions of these LEDs are shown in the figure below:

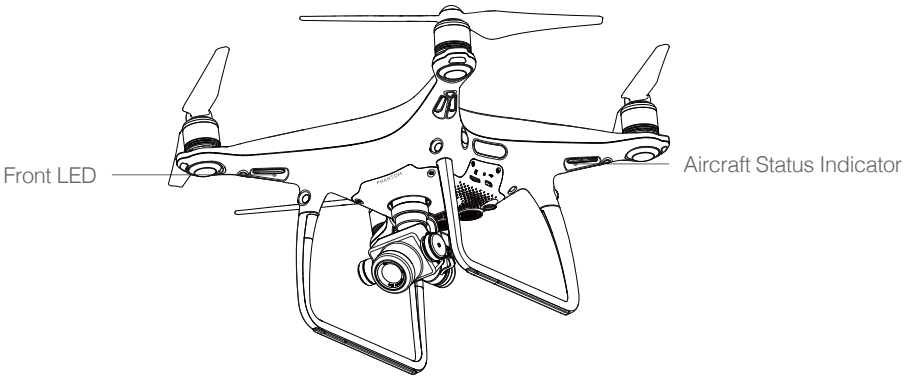

The Front LEDs show the orientation of the aircraft. The Front LEDs glow solid red when the aircraft is turned on to indicate the front (or nose) of the aircraft. The Aircraft Status Indicators communicate the system status of the flight controller. Refer to the table below for more information about the Aircraft Status Indicators.

Aircraft Status Indicator Description

Normal	
Ⓡ Ⓖ Ⓨ ····· Red, Green and Yellow Flash Alternatively	Turning On and Self Diagnostic Testing
Ⓖ Ⓨ ····· Green and Yellow Flash Alternatively	Warming Up
Ⓖ ····· Green Flashes Slowly	Safe to Fly (P-mode or S-mode with GPS , Vision Positioning and Obstacle Sensing)
Ⓖ X2 ····· Green Flashes Twice	Safe to Fly (P-mode or S-mode with GPS , Vision Positioning and Obstacle Sensing)
Ⓨ ····· Yellow Flashes Slowly	Safe to Fly (A-mode but No GPS and Vision Positioning and Obstacle Sensing)
Warning	
Ⓨ ····· Fast Yellow Flashing	Remote Controller's Signal Lost
Ⓡ ····· Slow Red Flashing	Low Battery Warning
Ⓡ ····· Fast Red Flashing	Critical Battery Warning
Ⓡ ····· Red Flashing Alternatively	IMU Error
Ⓡ —— Solid Red	Critical Error
Ⓡ Ⓨ ····· Red and Yellow Flash Alternatively	Compass Calibration Required

 © 2016 DJI. All Rights Reserved.

Return-to-Home (RTH)

The Return-to-Home (RTH) function brings the aircraft back to the last recorded Home Point. There are three types of RTH procedures: Smart RTH, Low Battery RTH, and Failsafe RTH. This section describes these three scenarios in detail.

	GPS	Description
Home Point		If a strong GPS signal was acquired before takeoff, the Home Point is the location from which the aircraft was launched. The GPS signal strength is indicated by the GPS icon ( ). The aircraft status indicator will blink rapidly when the home point is recorded.

- Aircraft can sense and avoid obstacles when Obstacle Sensing System is enabled and the lighting conditions is sufficient. The aircraft will automatically climb up to avoid obstacle and fly to the Home Point at the new altitude.

Failsafe RTH

If the Home Point was successfully recorded and the compass is functioning normally, Failsafe RTH will be automatically activated if the remote controller signal is lost for more than three seconds. The Return-to-Home process may be interrupted and the operator may regain control of the aircraft if the remote controller signal connection is re-established.

Failsafe Illustration

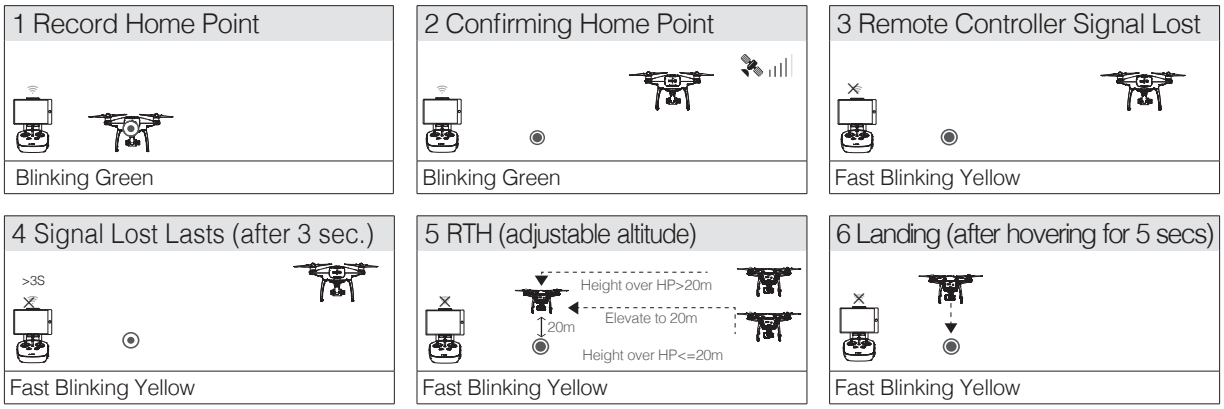

- Aircraft cannot return to the Home Point when GPS signal is weak ([ ] displays grey) or unavailable.
- Aircraft automatically descends and lands if RTH is triggered when the aircraft flies within a 20 meters (65 feet) radius of the Home Point. Aircraft will stop ascending and immediately return to the Home Point if you move the left stick if the aircraft reaches 20 meters (65 feet) altitudes or beyond during Failsafe.
- The aircraft cannot avoid obstruction during the Failsafe RTH when Obstacle Sensing system is disabled, therefore, it is important to set an suitable Failsafe altitude before each flight. Launch the DJI GO app and enter “Camera” and select “MODE > Advanced Settings > Failsafe mode” to set the Failsafe altitude.
- User cannot control the aircraft while the aircraft is ascending to its failsafe altitude. However, user can press RTH button once to exit ascending and regain control.

© 2016 DJI. All Rights Reserved.

Smart RTH

Use the RTH button on the remote controller (refer to "RTH button" on page 33 for more information) or tap the RTH button in the DJI GO app and follow the on-screen instructions when GPS is available to initiate Smart RTH. The aircraft will then automatically return to the last recorded Home Point. You may use the remote controller's control sticks to control the aircraft's position to avoid a collision during the Smart RTH process. Press and hold the Smart RTH button once to start the process, and press the Smart RTH button again to terminate the procedure and regain full control of the aircraft.

Low Battery RTH

The low battery level failsafe is triggered when the DJI Intelligent Flight Battery is depleted to a point that may affect the safe return of the aircraft. Users are advised to return home or land the aircraft immediately when prompted. The DJI GO app will display a notice when a low battery warning is triggered. The aircraft will automatically return to the Home Point if no action is taken after a ten-second countdown. The user can cancel the RTH procedure by pressing the RTH button on the remote controller. The thresholds for these warnings are automatically determined based on the aircraft's current altitude and distance from the Home Point.

The aircraft will land automatically if the current battery level can only support the aircraft long enough to descend from its current altitude. The user can still use the remote controller to alter the aircraft's orientation during the landing process.

The Battery Level Indicator is displayed in the DJI GO app, and is described below:

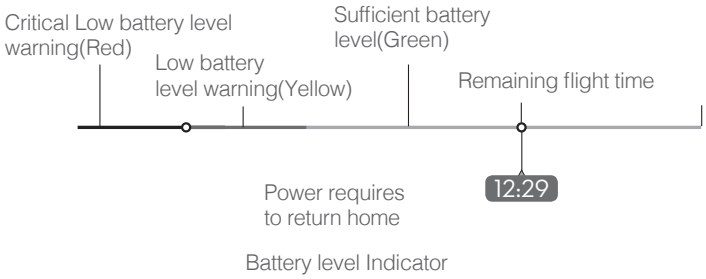

Battery Level Warning	Remark	Aircraft Status Indicator	DJI GO App	Flight Instructions
Low battery level warning	The battery power is low. Please land the aircraft.	Aircraft status indicator blinks RED slowly.	Tap "Go-home" to have the aircraft return to the Home point and land automatically, or "Cancel" to resume normal flight. If no action is taken, the aircraft will automatically go home and land after 10 seconds. Remote controller will sound an alarm.	Fly the aircraft back and land it as soon as possible, then stop the motors and replace the battery.

 © 2016 DJI. All Rights Reserved.

Critical Low battery level warning	The aircraft must land immediately.	Aircraft status indicator blinks RED quickly.	The DJI GO app display will flash red and the aircraft will start to descend. The remote controller will sound an alarm.	Allow the aircraft to descend and land automatically.
Estimated remaining flight time	Estimated remaining flight based on current battery level.	N/A	N/A	N/A

- When Critical battery level warning is triggered and the aircraft begins to land automatically, you may push the left stick upward to make the aircraft hover at its current altitude, giving you an opportunity to navigate to a more appropriate landing location.
- The colored zones and markers on the battery level indicator bar reflect the estimated remaining flight time. They are automatically adjusted according to the aircraft's current location and status.

Failsafe Safety Notices

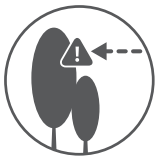	The aircraft cannot avoid obstruction during the Failsafe RTH when the Obstacle Sensing System is disabled. Therefore, it is important to set an suitable Failsafe altitude before each flight. Launch the DJI GO app and enter "Camera" and select "MODE > Advanced Settings > Failsafe mode" to set the Failsafe altitude.
	If the aircraft is flying under 20 meters (65 feet) and Failsafe (including Smart RTH, Lower Battery RTH) is triggered, the aircraft will first automatically ascend to 20 meters (65 feet) from the current altitude. You can only cancel the ascending by exiting the Failsafe. Refer to "RTH Button" on page 33 for more information on how to exit the Failsafe and regain the control of the remote controller.
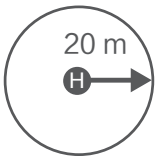	Aircraft automatically descends and lands if RTH is triggered when the aircraft flies within a 20 meters (65 feet) radius of the Home Point. Aircraft will stop ascending and immediately return to the Home Point if you move the left stick if the aircraft reaches 20 meters (65 feet) altitudes or beyond during Failsafe.
	Aircraft cannot return to the Home Point when GPS signal is weak ([ ] displays grey) or unavailable.
	if you move the left stick after the aircraft rises above 65 feet (20m) but below the pre-set Failsafe RTH altitude, the aircraft will stop ascending and immediately return to the Home Point.

© 2016 DJI. All Rights Reserved.

Obstacle Avoidance During RTH

Aircraft can now sense and actively attempt to avoid obstacle during FailSafe RTH, provided that the light condition is ideal for the Obstacle Sensing System. The details on how the aircraft will behave during obstacle avoid is listed below:

1. Aircraft decelerates when an obstacle is sensed at 65 feet (20 meters) ahead.
2. Aircraft stops and hover then start ascending vertically to avoid the obstacle. Eventually, the aircraft will stop climbing when it is at least 16 feet (5 meters) above the detected obstacle.
3. Failsafe RTH procedure resume, the aircraft will continue flying to the Home Point at the current altitude.

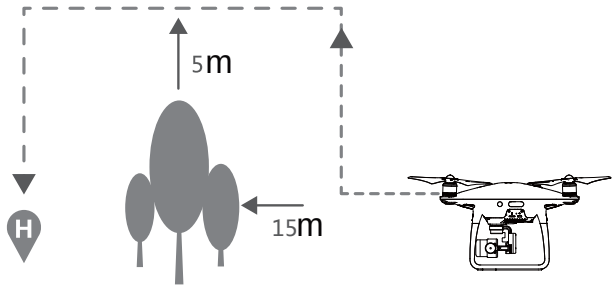

⚠
- To ensure the aircraft is heading towards the static direction, you cannot rotate the aircraft during FailSafe RTH while Obstacle Sensing System is enabled.
- The aircraft cannot avoid the obstacle that is direct above the aircraft.

TapFly

Introduction

With the TapFly feature, user now can tap on the mobile device screen to guide the aircraft to fly toward the designated direction without using the remote controller. Aircraft can automatically avoid obstacle or initiate break and then hover automatically during the flight, provided that the lighting is not too dark (< 300 lux) nor too bright (> 10,000 lux).

Using TapFly

Ensure the battery level is more than 50 % for the Intelligent Flight Battery. And the aircraft is in P-mode. Then follow the steps below to use TapFly:

Take off and ensure the aircraft is flying at least 9 feet (3 meters) above the ground.

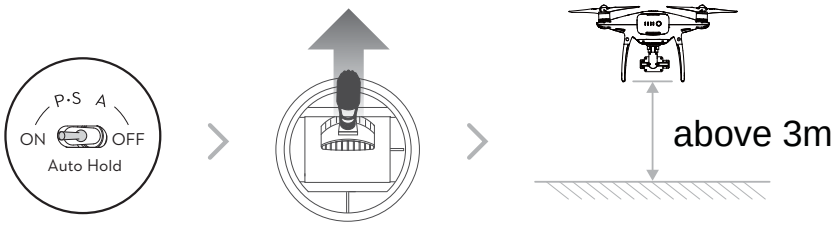

 © 2016 DJI. All Rights Reserved.

Launch DJI GO app and tap at the bottom of the camera view, read and understand the prompt statements.

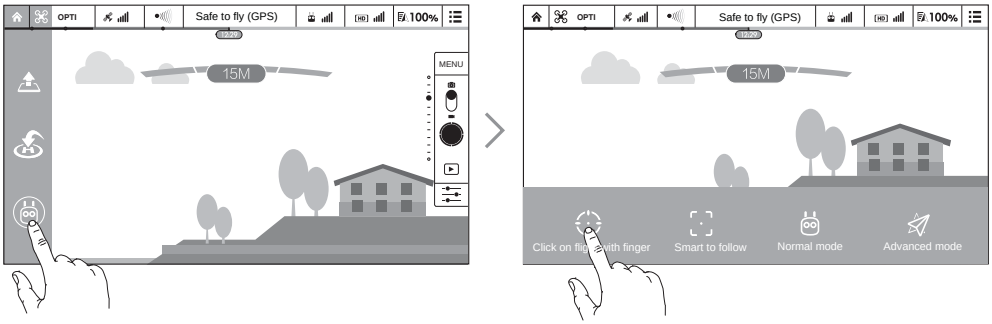

Tap once on the target direction and wait for GO icon to appear. Tap again to confirm the selection and the aircraft will automatically fly towards the target direction.

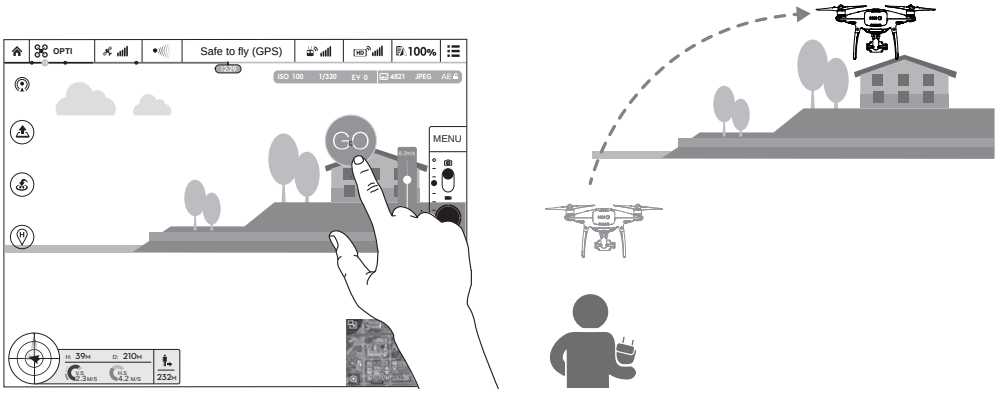

- DO NOT guide the aircraft to fly towards people, animals, small and fine objects (e.g. tree branches and power lines) or transparent objects (e.g. glass or water surface).
- Watch for the obstacles that is on the flight path and stay clear of them.
- There may be deviations between the expected and the actual flight path of Tapfly selection.
- The selectable range for the target direction is limited. You cannot make TapFly selection that is close to the upper or lower edge of the screen.
- TapFly mode may not work properly when the aircraft is flying over water surface or snow covered area.
- Be extra cautions when flying in extremely dark (< 300 lux) or bright (>10,000 lux) environments.

© 2016 DJI. All Rights Reserved.

After confirmed with the TapFly selection, the aircraft will fly automatically towards the area marked by ◯ icon. Note that you can still use the control stick to control the movement of the aircraft during the flight.

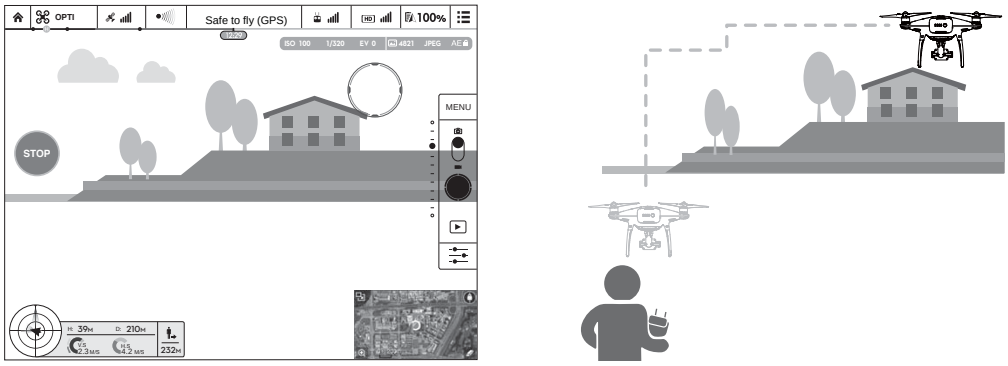

Note that the aircraft will also automatically adjust its speed when it senses there is obstacle at the front of the aircraft or it is flying too close to the ground. However, the user should not rely on this feature to navigate the aircraft between the obstacles. Meanwhile the FailSafe procedure will override the TapFly operation, given that if the GPS signal is weak; the aircraft will exit the autonomous flight from TapFly and fly back to the Home Point automatically.

Exit TapFly

Use the following methods to exit TapFly:

1. Press once on the Intelligent Flight Pause button on the remote controller or pull back the pitch stick on the remote controller.
2. Tap “STOP” button on the screen.

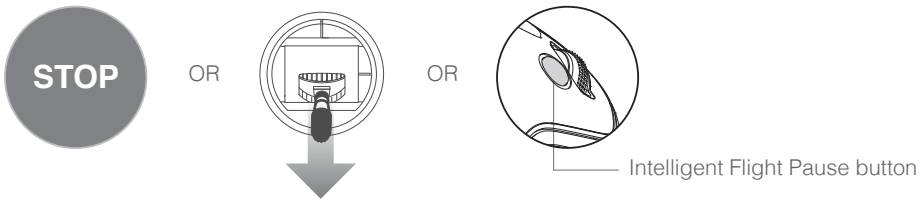

Aircraft will stop and hover after exit from TapFly. You may either tap a new target direction to proceed to the next flight or bring back the aircraft to the Home Point manually.

ActiveTrack

ActiveTrack allows you to mark and track a moving object on your mobile device screen. The aircraft will automatically avoid obstacles in its flight path.

Using ActiveTrack

Ensure the Intelligent Flight Battery has more than 50% power and the aircraft is in either P-mode. Then follow the steps below to use ActiveTrack:

1. Take off and hover at least 9 feet (3 meters) above the ground.

 © 2016 DJI. All Rights Reserved.