After confirmed with the TapFly selection, the aircraft will fly automatically towards the area marked by ◯ icon. Note that you can still use the control stick to control the movement of the aircraft during the flight.

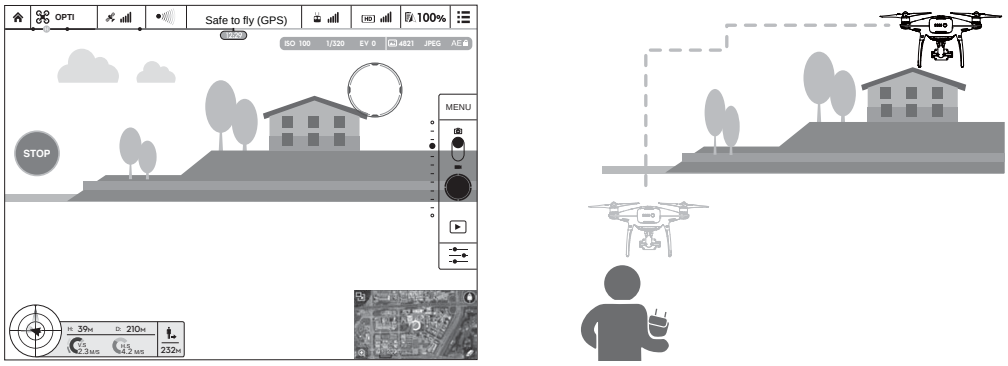

Note that the aircraft will also automatically adjust its speed when it senses there is obstacle at the front of the aircraft or it is flying too close to the ground. However, the user should not rely on this feature to navigate the aircraft between the obstacles. Meanwhile the FailSafe procedure will override the TapFly operation, given that if the GPS signal is weak; the aircraft will exit the autonomous flight from TapFly and fly back to the Home Point automatically.

Exit TapFly

Use the following methods to exit TapFly:

1. Press once on the Intelligent Flight Pause button on the remote controller or pull back the pitch stick on the remote controller.
2. Tap “STOP” button on the screen.

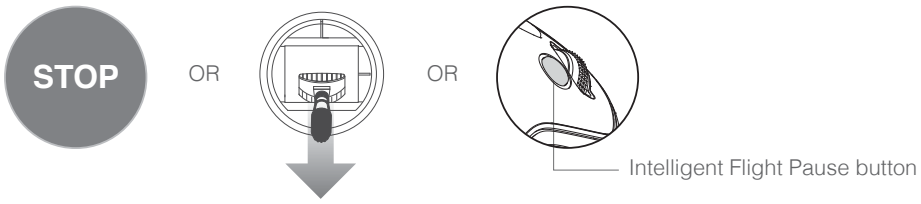

Aircraft will stop and hover after exit from TapFly. You may either tap a new target direction to proceed to the next flight or bring back the aircraft to the Home Point manually.

ActiveTrack

ActiveTrack allows you to mark and track a moving object on your mobile device screen. The aircraft will automatically avoid obstacles in its flight path.

Using ActiveTrack

Ensure the Intelligent Flight Battery has more than 50% power and the aircraft is in either P-mode. Then follow the steps below to use ActiveTrack:

1. Take off and hover at least 9 feet (3 meters) above the ground.

 © 2016 DJI. All Rights Reserved.

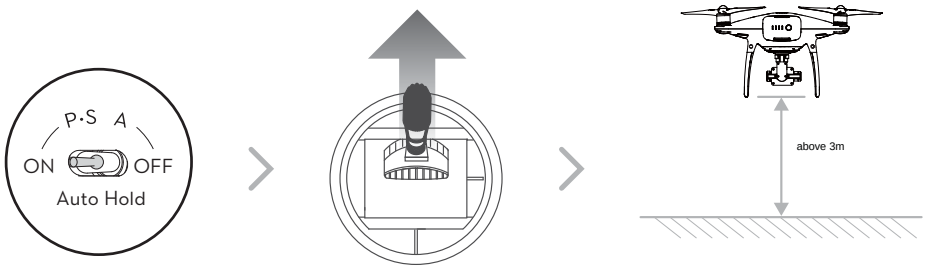

2. In the DJI GO app, tap to bring up the flight modes and then select.

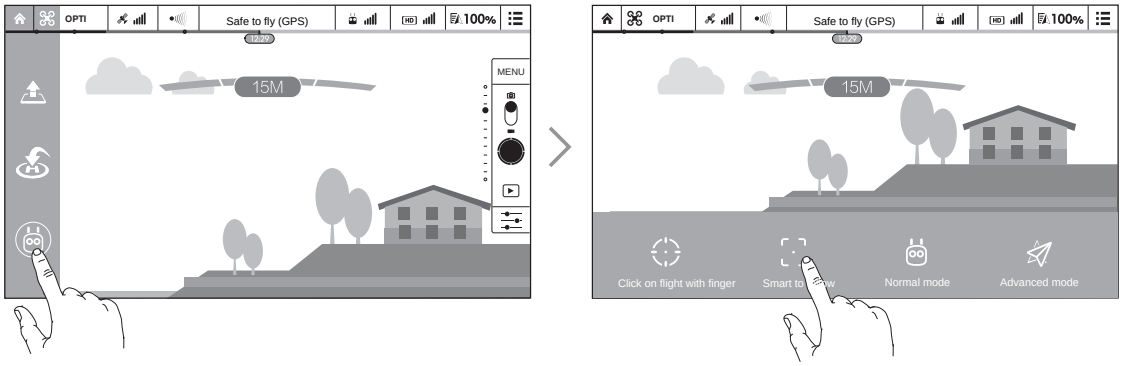

3. Drag a box around the object you want to track and tap it to confirm the selection. The box will turn green when tracking is in progress. If the box turns red, the object was not identified and you should try again.

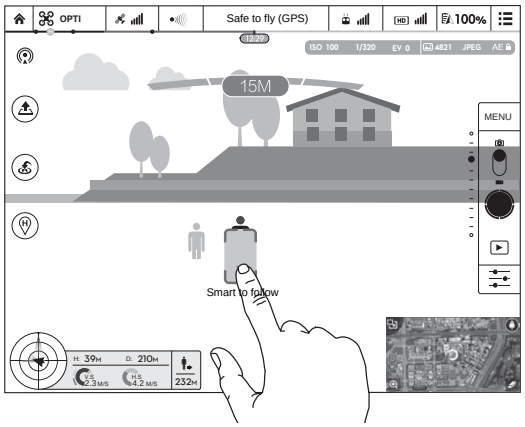

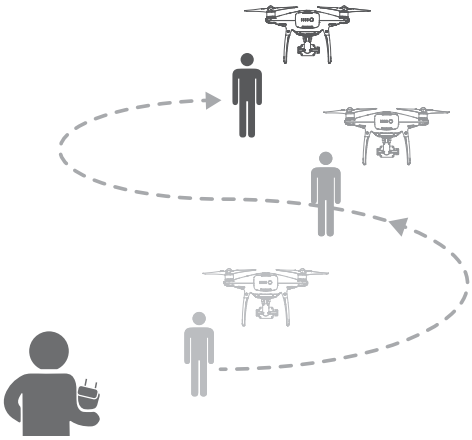

⚠
- DO NOT select an area containing people, animals, small, fine objects (e.g. tree branches and power lines) or transparent objects (e.g. glass or water surface).
- Stay clear of obstacles near the flight path, particularly when the aircraft is flying backward.
- Be extra vigilant when using ActiveTrack in any of the following situations:
  a) The tracked subject is not moving on a level plane.
  b) The tracked subject changes shape drastically while moving.
  c) The tracked subject could be blocked or out of sight for a long time.

© 2016 DJI. All Rights Reserved.

d) The tracked subject is moving on a snowy surface.

e) The lighting is extremely low (< 300 lux) or high (> 10,000 lux).

f) The tracked subject has a similar color or pattern as its surrounding environment.

- You must follow local privacy laws and regulations when using ActiveTrack.

- The aircraft will sense and avoid obstacles on its flight path.
- If the aircraft loses track of the subject, because it is moving too fast or obscured, re-select the subject to resume tracking.

Exiting ActiveTrack

There are two ways to exit ActiveTrack:

1. Press the Intelligent Flight Pause button on the remote controller.
2. Pull the pitch stick backward.

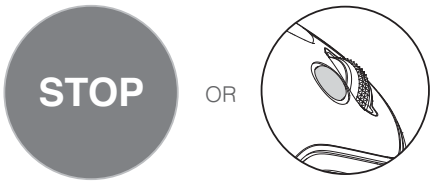

After exiting ActiveTrack, the aircraft will stop and hover in place, at which point you may choose to start a new mission or bring the aircraft back to the Home Point.

Vision Positioning and Obstacle Sensing System

The DJI Vision Positioning System uses ultrasound and image data to help the aircraft maintain its current position. With the help of Vision Positioning, your Phantom 4 Pro/Pro+ can hover in place more precisely and fly indoors or in other environments where a GPS signal is not available. The main components of the Vision Positioning System are located on the bottom of your Phantom 4 Pro/Pro+, including [1] [2] [3] three binocular sensors and [4] two ultrasonic sensors.

The Obstacle Sensing System is consist of [1] [2] two binocular sensors and [5] infrared module on both sides, which constantly scans for obstacles around, allowing it to avoid collisions by going around, over or hovering.

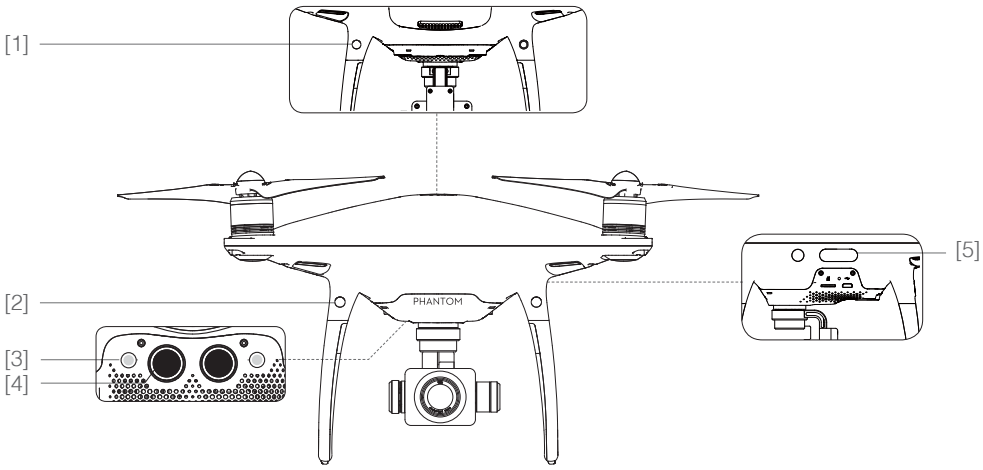

 © 2016 DJI. All Rights Reserved.

Detection Range

The detection range of the Vision Positioning and Obstacle Sensing System is depicted as follow. Note that the aircraft cannot sense and avoid the obstacles that are not within the detection range.

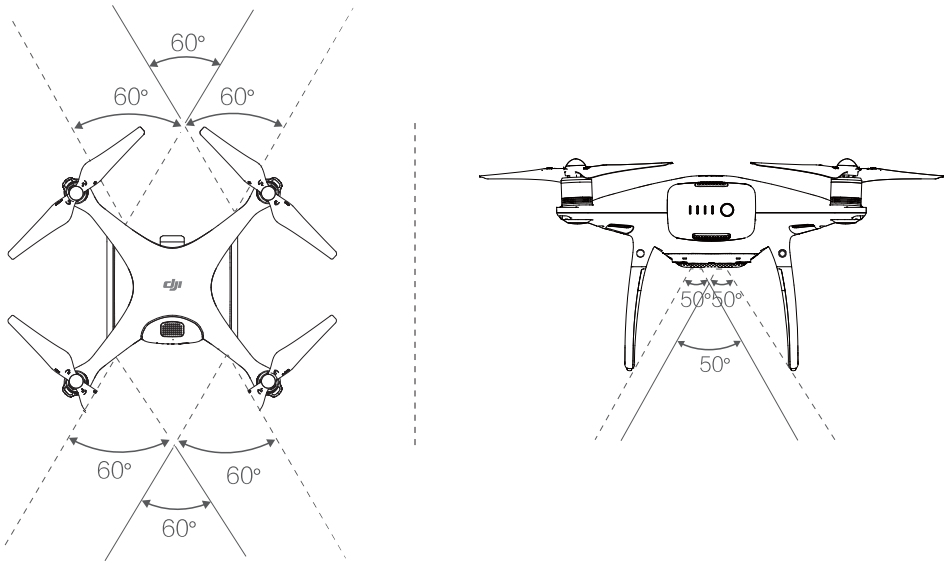

⚠ In Tapfly and ActiveTrack mode, both the Vision Positioning and Obstacle Sensing System works if the speed is within 6 m/s. Otherwise the binocular sensor contrary to the flight direction is disabled.

Calibrating Sensors

Vision Positioning and Obstacles Sensing sensors that are calibrated on delivery. However these sensors are vulnerable to excessive impact, hence it will require calibration via DJI Assistant 2 from time to time. Follow the steps below to calibrate the camera when the DJI GO app prompt you to do so.

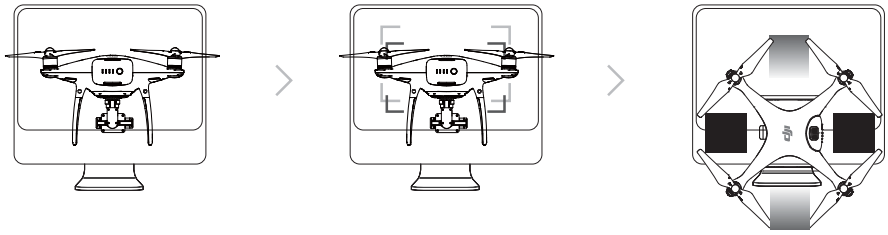

01
Point the aircraft toward the screen

02
Align the boxes

03
Pan and tilt the aircraft

Using Vision Positioning

Vision Positioning is activated automatically when the aircraft is turned on. No further action is required. Vision Positioning is typically used in indoor environments, where GPS is unavailable. Using the sensors that are built into the Vision Positioning system, the aircraft can hover precisely even without GPS.

© 2016 DJI. All Rights Reserved.

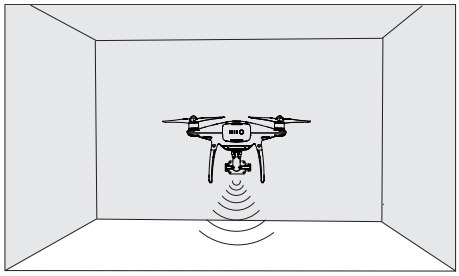

Follow the steps below to use Vision Positioning:

1. Toggle the flight mode switch to P-mode.
2. Place the aircraft on a flat surface. Note that the Vision Positioning system cannot work properly on surfaces without clear pattern variations.
3. Turn on the aircraft. The aircraft status indicator will flash green two times, which indicates the Vision Positioning system is ready. Gently push the left stick up to lift off and the aircraft will hover in place.

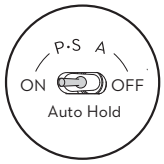

Assisted Braking from Obstacle Sensing System

Powered by the Obstacle Sensing System, the aircraft will now be able to actively initiate breaks when obstacles are detected direct ahead of the aircraft. Note that Obstacle System works best when light condition is ideal and the obstacle does not have feature-less pattern. In addition, the aircraft speed cannot exceed over 14 meter/second so that the aircraft can break and stop at the safe distance.

The ToF distance measure module only works in Tapfly and ActiveTrack mode, fly with caution.

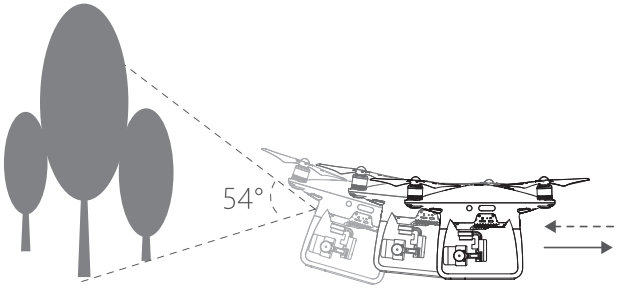

⚠ The performance of your Vision Positioning System is affected by the surface over which it is flying. The ultrasonic sensors may not be able to accurately measure distances when operating above sound-absorbing materials. In addition, the camera may not function correctly in suboptimal environments. The aircraft will switch from P-mode to A-mode automatically if neither GPS nor Vision Positioning System are available. Operate the aircraft with great caution in the following situations:

- Flying over monochrome surfaces (e.g. pure black, pure white, pure red, pure green).
- Flying over a highly reflective surfaces.
- Flying at high speeds(over 10 m/s at 2 meters or over 5 m/s at 1 meter).
- Flying over water or transparent surfaces.
- Flying over moving surfaces or objects.
- Flying in an area where the lighting changes frequently or drastically.
- Flying over extremely dark (lux < 10) or bright (lux > 100,000) surfaces.
- Flying over surfaces that can absorb sound waves (e.g. thick carpet).
- Flying over surfaces without clear patterns or texture.
- Flying over surfaces with identical repeating patterns or textures (e.g. tiles with the same design).
- Flying over inclined surfaces that will deflect sound waves away from the aircraft.

 © 2016 DJI. All Rights Reserved.

- Keep the sensors clean at all times. Dirt or other debris may adversely affect the effectiveness of the sensors.
- Vision Positioning is only effective when the aircraft is at altitudes of 0.3 to 10 meters.
- The Vision Positioning System may not function properly when the aircraft is flying over water.
- The Vision Positioning System may not be able to recognize pattern on the ground in low light conditions (less than 100 lux).
- Do not use other ultrasonic devices with frequency of 40 KHz when Vision Positioning system is in operation.

- Keep the animals away from the aircraft when Vision Positioning system is activated. The sonar sensor emits high frequency sounds that are only audible to some animals.

Flight Recorder

Flight data is automatically recorded to the internal storage of the aircraft. This includes flight telemetry, aircraft status information, and other parameters. To access these data, connect the aircraft to the PC through the Micro USB port and launch the DJI GO app.

Attaching and Detaching the Propellers

Use only DJI approved propellers with your Phantom 4 Pro / Pro+. The grey and black ring on the propeller indicate where they should be attached and in which direction whey should spin.

Propellers	Silver Ring	Black Ring
Figure		
Attach On	Motors without three dots	Motors with three dots
Legends	Lock : Turn the propellers in the indicated direction to mount and tighten. Unlock : Turn the propellers in the indicated direction to loosen and remove.	

Attaching the Propellers

1. Be sure to remove the warning stickers from the motors before attaching the propellers.
2. Mount the propellers with black propeller rings to the motors with black dots. Mount the propellers with sliver propeller rings to the motors without black dots. Press t he propeller down onto the mounting plate and rotate in the lock direction until it is secured in its position.

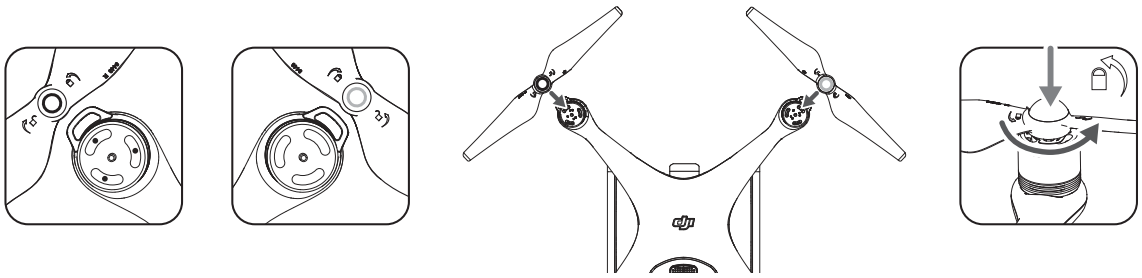

© 2016 DJI. All Rights Reserved.

- Be aware of the sharp edges of the propellers. Handle with care.
- Use only the DJI approved propellers. Do not intermix the propellers types.
- Stand clear of the motors and DO NOT touch the propellers when they are spinning.

Detaching the Propellers

Press down the propellers onto the motor mount, rotate the propeller according to the marked direction to unlock the propeller.

- Check that the propellers and motors are installed correctly and firmly before every flight.
- Ensure that all propellers are in good condition before each flight. DO NOT use aged, chipped, or broken propellers.
- To avoid injury, STAND CLEAR of and DO NOT touch propellers or motors when they are spinning.
- ONLY use original DJI propellers for a better and safer flight experience.

DJI Intelligent Flight Battery

The DJI Intelligent Flight Battery has a capacity of 5870 mAh, a voltage of 15.2 V, and a smart charge/discharge functionality. It should only be charged using an appropriate charger that has been approved by DJI.

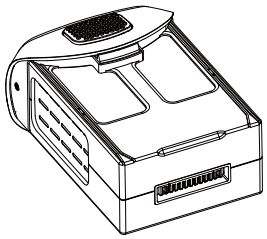

Intelligent Flight Battery

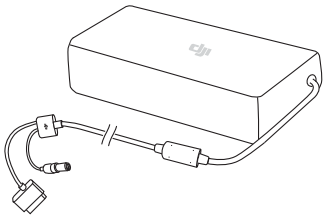

Charger

The Intelligent Flight Battery must be fully charged before using it for the first time. Refer to "Charging the Intelligent Flight Battery" for more information.

Be aware that the output power of the supplied Phantom 4 Pro / Pro+ charger is 100W.

DJI Intelligent Flight Battery Functions

1. Battery Level Display: The LED indicators display the current battery level.
2. Battery Life Display: The LEDs display the current battery power cycle.
3. Auto-Discharging Function: To prevent swelling, the battery automatically discharges to below 65% of total power when it is idle for more than ten days. It takes around two days to discharge the battery to 65%. It is normal to feel moderate heat being emitted from the battery during the discharge process. Discharge thresholds can be set in the DJI GO app.
4. Balanced Charging: Automatically balances the voltage of each battery cell when charging.
5. Overcharge Protection: Charging automatically stops when the battery is fully charged.
6. Temperature Detection: The battery will only charge when the temperature is between 5°C (41°F) and 40°C (104°F).

 © 2016 DJI. All Rights Reserved.

7. Over Current Protection: The battery stops charging when high amperage (more than 8 A) is detected.
8. Over Discharge Protection: To prevent over-discharge damage, discharging automatically stops when the battery voltage reaches 12 V.
9. Short Circuit Protection: Automatically cuts the power supply when a short circuit is detected.
10. Battery Cell Damage Protection: The DJI GO app displays a warning message when a damaged battery cell is detected.
11. Battery Error History: Browse the battery error history in the DJI GO app.
12. Sleep Mode: To save power, the battery enters sleep mode after 20 minutes of inactivity.
13. Communication: Information pertaining to the battery's voltage, capacity, current, etc. is transmitted to the aircraft's main controller.

⚠ Refer to *Phantom 4 Pro / Pro+ Intelligent Flight Battery Safety Guidelines* before use. Users take full responsibility for all operations and usage.

Using the Battery

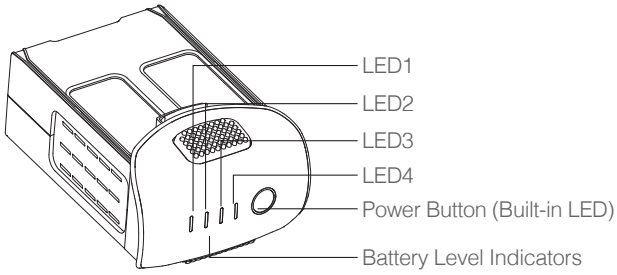

Turning ON/OFF

Turning On: Press the Power Button once, then press again and hold for 2 seconds to turn on. The Power LED will turn red and the Battery Level Indicators will display the current battery level.

Turning Off: Press the Power Button once, then press again and hold for 2 seconds to turn off. The battery power LED will flash when powering off the Phantom to allow automatically stopping of a recording during the event recording wasn't stopped.

The Battery Level Indicators will also show the current battery level during charging and discharging. The indicators are defined below.

: LED is on. : LED is flashing.
: LED is off.

© 2016 DJI. All Rights Reserved.

Battery Level				
LED1	LED2	LED3	LED4	Battery Level
▮	▮	▮	▮	87.5%~100%
▮	▮	▮	▮	75%~87.5%
▮	▮	▮	▯	62.5%~75%
▮	▮	▮	▯	50%~62.5%
▮	▮	▯	▯	37.5%~50%
▮	▮	▯	▯	25%~37.5%
▮	▯	▯	▯	12.5%~25%
▮	▯	▯	▯	0%~12.5%
▯	▯	▯	▯	=0%

Low Temperature Notice:

1. Battery capacity is significantly reduced when flying in low temperature (< 0°C) environments.
2. It is not recommended that the battery be used in extremely low temperature (< -10°C) environments. Battery voltage should reach the appropriate level when operating environment with temperatures between -10°C and 5°C.
3. End the flight as soon as the DJI GO app displays the “Low Battery Level Warning” in low temperature environments.
4. Keep the battery indoors to warm it before flying in low temperature environments.
5. To ensure optimal performance of the battery, keep the battery temperature above 20°C.
6. The charger will stop charging the battery if the battery cell’s temperature is not within the operating range (0°C ~ 40°C).

⚠ In cold environments, insert the battery into the battery compartment and allow the aircraft for approximately 1-2 minutes to warm up before taking off.

Checking the Battery Level

The Battery Level Indicators display how much power remains. When the battery is turned off, press the Power Button once. The Battery Level Indicators will light up to display the current battery level. See below for details.

Battery life

Battery life refers to how many more times the battery can be discharged and recharged before it must be replaced. When the battery is turned off, press and hold the Power Button for 5 seconds to check the battery life. The Battery Level Indicators will light up and/or blink for two seconds, as shown below:

 © 2016 DJI. All Rights Reserved.

Battery Life				
LED1	LED2	LED3	LED4	Battery Life
▮	▮	▮	▮	90%~100%
▮	▮	▮	▮	80%~90%
▮	▮	▮	▯	70%~80%
▮	▮	▮	▯	60%~70%
▮	▮	▯	▯	50%~60%
▮	▮	▯	▯	40%~50%
▮	▯	▯	▯	30%~40%
▮	▯	▯	▯	20%~30%
▯	▯	▯	▯	below 20%

⚠ When battery life reaches 0%, it can no longer be used.

For more information about the battery, launch the DJI GO app and check the information that is listed under the battery tab.

Charging the Intelligent Flight Battery

1. Connect the Battery Charger to a power source (100-240 V 50/60 Hz).
2. Connect one end of the charger to the Intelligent Flight Battery to the Battery Charger. If the battery level is above 95%, turn on the battery before charging.
3. The Battery Level Indicator will display the current battery level as it is charging.
4. The Intelligent Flight Battery is fully charged when the Battery Level Indicators are all off.
5. Air-cool the Intelligent Flight Battery after each flight. Allow its temperature to drop to room temperature before storing it for an extended period.

⚠ • Always turn off the battery before inserting it or removing it from the Phantom 4 Pro / Pro+. Never insert or remove a battery when it is turned on.

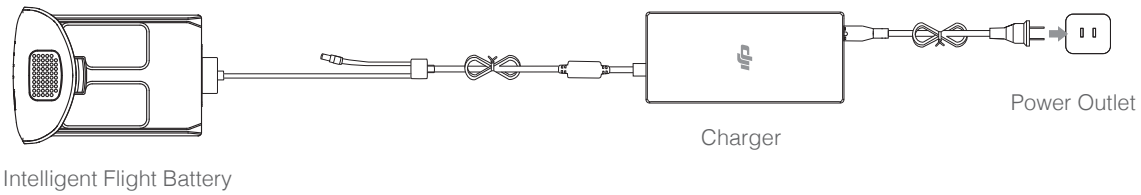

© 2016 DJI. All Rights Reserved.

Battery Level Indicators While Charging				
LED1	LED2	LED3	LED4	Battery Level
				0%~25%
				25%~50%
				50%~75%
				75%~100%
				Fully Charged

Battery Protection LED Display

The table below shows battery protection mechanisms and corresponding LED patterns.

Battery Level Indicators while Charging					
LED1	LED2	LED3	LED4	Blinking Pattern	Battery Protection Item
				LED2 blinks twice per second	Over current detected
				LED2 blinks three times per second	Short circuit detected
				LED3 blinks twice per second	Over charge detected
				LED3 blinks three times per second	Over-voltage charger detected
				LED4 blinks twice per second	Charging temperature is too low
				LED4 blinks three times per second	Charging temperature is too high

After these issues are resolved, press the Power Button to turn off the Battery Level Indicator. Unplug the Intelligent Flight Battery from the charger and plug it back in to resume charging. Note that you do not need to unplug and plug in the charger in the event of a room temperature error; the charger will resume charging when the temperature is within the allowable range.

⚠ DJI does not take any responsibility for damage caused by third-party chargers.

How to discharge your Intelligent Flight Battery:
Slow : Place the Intelligent Flight Battery into the Phantom 4's Pro / Pro+ Battery Compartment and turn it on. Leave it on until there is less than 8% of power left, or until the battery can no longer be turned on. Launch the DJI GO app to check battery levels.
Rapid : Fly the Phantom 4 Pro / Pro+ outdoors until there is less than 8% of power left, or until the battery can no longer be turned on.

 © 2016 DJI. All Rights Reserved.

Remote Controller

This section describes the features of the remote controller and includes instructions for controlling the aircraft and the camera.

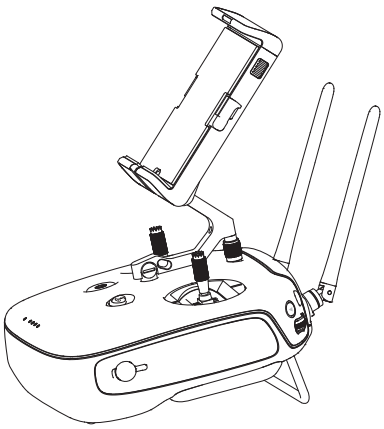

© 2016 DJI. All Rights Reserved.

Remote Controller

Remote Controller Profile

The Phantom 4 Pro/Pro+ remote controller is a multi-function wireless communication device that integrates the dual frequency video downlink system and aircraft remote control system. The 5.8 GHz video downlink is recommended in city to resist interference, while the 2.4 GHz is good for transmission distance in the open area. The remote controller features a number of camera control functions, such as taking and previewing photos and videos, as well as controlling gimbal motion. The battery level is displayed via LED indicators on the front panel of the remote controller.

- **Compliance Version:** The remote controller is compliant with local compliance and regulations.
- **Operating Mode:** Control can be set to Mode 1 or Mode 2, or to a custom mode.
- **Mode 1:** The right stick serves as the throttle.
- **Mode 2:** The left stick serves as the throttle.

⚠ To prevent transmission interference, do not operate more than three aircrafts in the same area.

Using the Remote Controller

Turning the Remote Controller On and Off

The Phantom 4 Pro / Pro+ remote controller is powered by a 2S rechargeable battery that has a capacity of 6000 mAh. The battery level is indicated via the Battery Level LEDs on the front panel. Follow the steps below to turn on your remote controller:

1. When the remote controller is turned off, press the Power Button once. The Battery Level LEDs will display the current battery level.
2. Press and hold the Power Button to turn on the remote controller.
3. The remote controller will beep when it is turned on. The Status LED will rapidly blink green, indicating that the remote controller is linking to the aircraft. The Status LEDs will glow solid green when linking is complete.
4. Repeat Step 2 to turn off the remote controller.

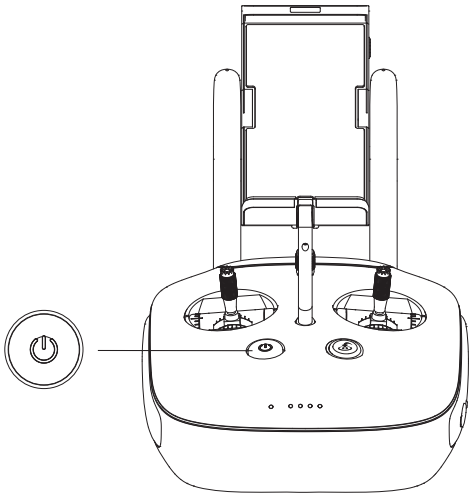

Charging the Remote Controller

Charge the remote controller using the included charger. Refer to the figure on next page below for more details.

 © 2016 DJI. All Rights Reserved.

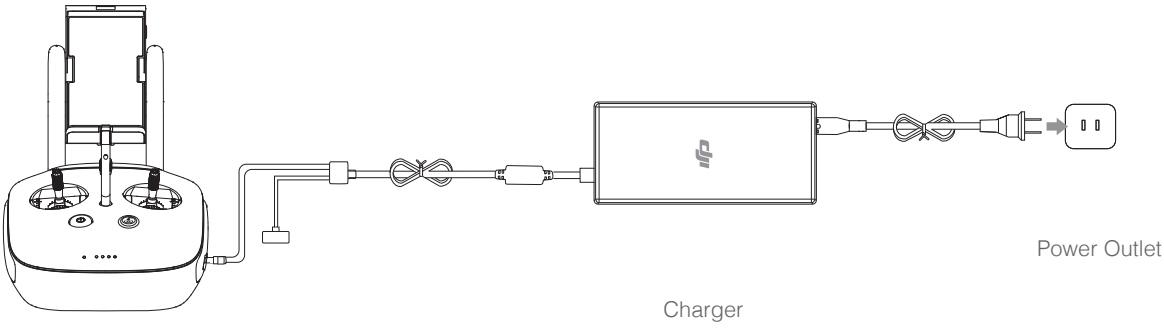

Controlling the Camera

Shoot videos/pictures, view recorded images, and adjust camera settings via the Shutter Button, Camera Settings Dial, Playback Button, and Video Recording Button on the remote controller.

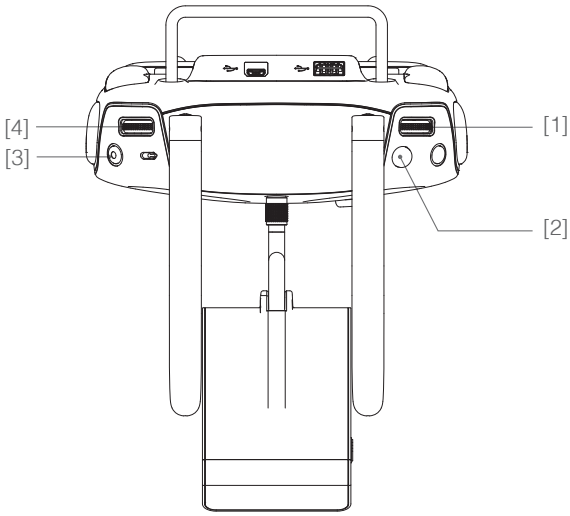

[1] Camera Settings Dial

Turn the dial to adjust camera settings such as ISO, shutter speed, and aperture without letting go of the remote controller. Press down on the dial to toggle between these settings.

[2] Shutter Button

Press to take a photo. If burst mode is activated, multiple photos will be taken with a single press.

[3] Video Recoding Button

Press once to start recording video, then press again to stop recording.

[4] Gimbal Dial

Use this dial to control the tilt of the gimbal.

Controlling Aircraft

This section explains how to control the orientation of the aircraft through the remote controller. The Remote Control is set to Mode 2 by default.

Stick Neutral/Mid-Point: Control sticks are in the center position.
Moving the Control Stick: The control stick is pushed away from the center position.

© 2016 DJI. All Rights Reserved.

Remote Controller (Mode 2)	Aircraft (⬅ Indicates Nose Direction)	Remarks
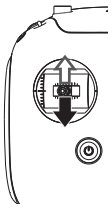	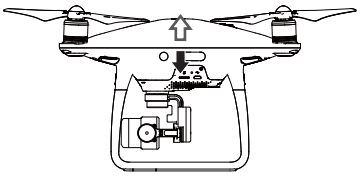	Moving the left stick up and down changes the aircraft's elevation. Push the stick up to ascend and down to descend. When both sticks are centered, the Phantom 4 Pro / Pro+ will hover in place. The more the stick is pushed away from the center position, the faster the Phantom 4 Pro / Pro+ will change elevation. Always push the stick gently to prevent sudden and unexpected elevation changes.
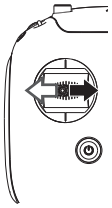	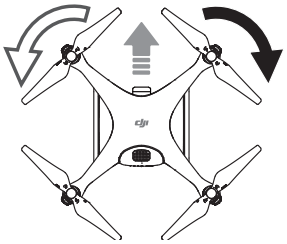	Moving the left stick to the left or right controls the rudder and rotation of the aircraft. Push the sick left to rotate the aircraft counter-clockwise, push the stick right to rotate the aircraft clockwise. If the stick is centered, the Phantom 4 Pro / Pro+ will maintain its current orientation. The more the stick is pushed away from the center position, the faster the Phantom 4 Pro / Pro+ will rotate.
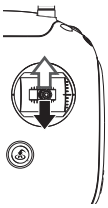	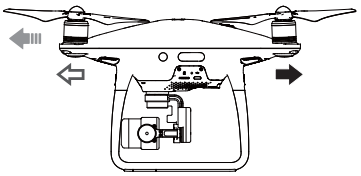	Moving the right stick up and down changes the aircraft's forward and backward pitch. Push the stick up to fly forward and down to fly backward. Phantom 4 Pro / Pro+ will hover in place if the stick is centered. Push the stick further away from the center position for a larger pitch angle (maximum 30˚) and faster flight.
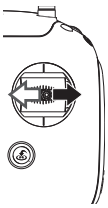	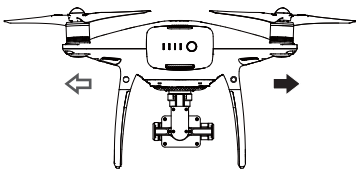	Moving the right stick control left and right changes the aircraft's left and right pitch. Push left to fly left and right to fly right. The Phantom 4 Pro / Pro+ will hover in place if the stick is centered.
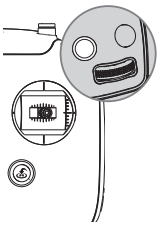	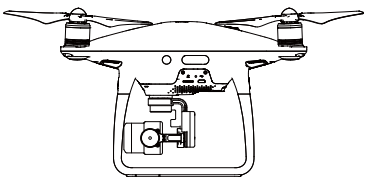	Press the Intellighent Flight Pause button once to exit from the ActiveTrack, TapFly and Intelligent Navigation flight mode. The aircraft will hover at the current position.

 © 2016 DJI. All Rights Reserved.

Adjusting Controller Sticks

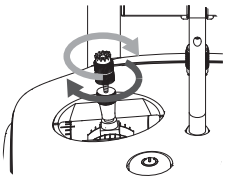

Hold and twist the controller sticks clockwise or counter clockwise to adjust the length of the controller sticks. A proper length of controller sticks can improve the controlling accuracy.

Flight Mode Switch

Toggle the switch to select the desired flight mode. You may choose between; P-mode, S-mode and A-mode.

Position	Figure	Flight Mode
Position 1		P-mode
Position 2		S-mode
Position 3		A-mode

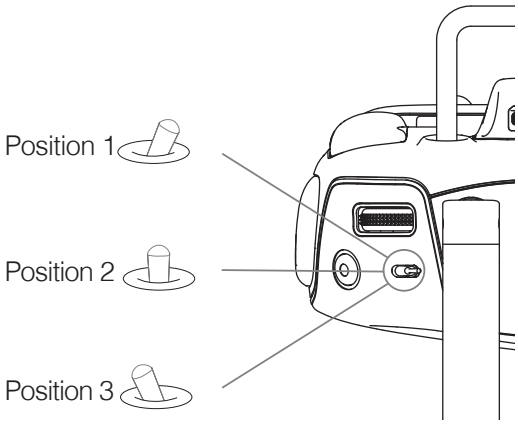

P-mode (Positioning): P-mode works best when the GPS signal is strong. The aircraft utilizes the GPS and Obstacle Sensing System to automatically stabilize itself, navigate between obstacles or track a moving object. Advanced features such as TapFly and ActiveTrack are enabled in this mode.

S-mode (Sport): The handling gain values of the aircraft are adjusted in order to enhance the maneuverability of the aircraft in S-mode. The maximum flight speed of the aircraft is increased to 20 m /s in this mode. Note that Obstacle Sensing system is disabled in this mode.

A-mode (Attitude): When neither the GPS nor the Obstacle Sensing System is available, the aircraft will only use its barometer for positioning to control the altitude.

Enable Multiple Flight Mode by launching the DJI GO app > Camera View > > Advanced Settings > Multiple Flight Mode before using the Intelligent Flight Mode for the first time.

RTH Button

Press and hold the RTH button to start the Return-to-Home (RTH) procedure. The LED ring around the RTH Button will blink white to indicate that the aircraft is entering RTH mode. The aircraft will then return to the last recorded Home Point. Press this button again to cancel the RTH procedure and regain control of the aircraft.

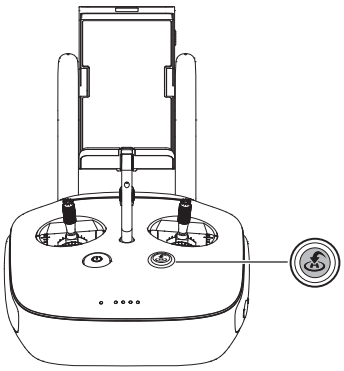

© 2016 DJI. All Rights Reserved.

Connecting Your Mobile Device

Tilt the mobile device holder to the desired position. Press the button on the side of the mobile device holder to release the clamp, and then place your mobile device into the cradle. Adjust the clamp down to secure the mobile device. To connect your mobile device to the remote controller using a USB cable, plug one end of the cable into your mobile device and the other end into the USB port on the back of the remote controller.

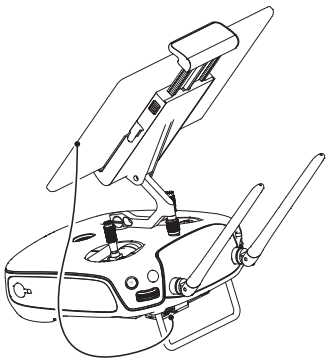

⚠ The Remote Controller of the Phantom 4 Pro+ is provided with a display device to run DJI GO app, you don't need to connect other mobile devices.

Optimal Transmission Range

The transmission signal between the aircraft and the remote controller is most reliable within the area that is depicted in the image below:

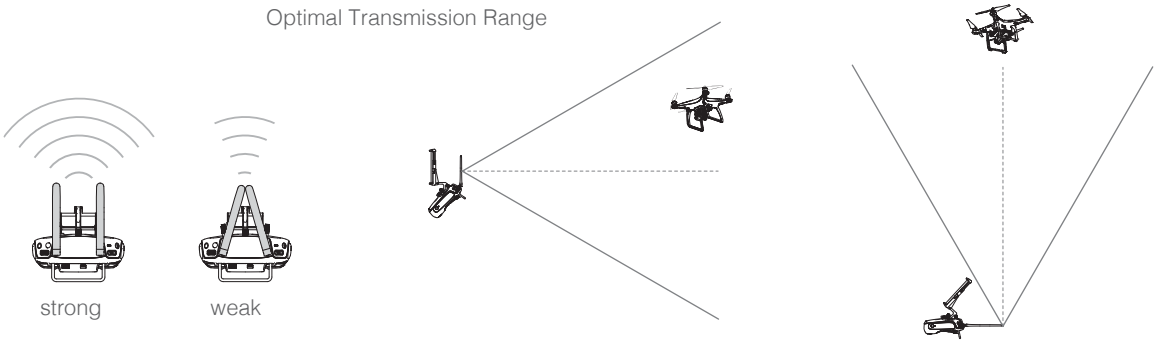

Ensure that the aircraft is flying within the optimal transmission zone. To achieve the best transmission performance, maintain the appropriate relationship between the operator and the aircraft.

Remote Controller Status LED

The Status LED reflects the strength of the connection between the remote controller and the aircraft. The RTH LED indicates the Return-to-Home status of the aircraft. The table below contains more information about these indicators.

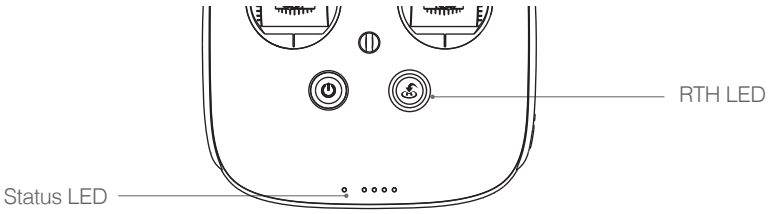

 © 2016 DJI. All Rights Reserved.