10660-AAA	Pulse Waveform (200Hz, 40%)	X	100.00	111.49	24.73	3.98	80.0	± 9.6 %
		Y	0.75	61.07	6.12		80.0	
		Z	7.98	79.59	13.48		80.0	
10661-AAA	Pulse Waveform (200Hz, 60%)	X	100.00	115.51	25.21	2.22	100.0	± 9.6 %
		Y	0.35	60.00	4.23		100.0	
		Z	100.00	95.80	15.85		100.0	
10662-AAA	Pulse Waveform (200Hz, 80%)	X	100.00	134.17	30.81	0.97	120.0	± 9.6 %
		Y	29.47	245.22	22.71		120.0	
		Z	0.15	60.00	4.10		120.0	

[E] Uncertainty is determined using the max. deviation from linear response applying rectangular distribution and is expressed for the square of the field value.

Attachment 2. – Dipole Calibration Data

Calibration Laboratory of
Schmid & Partner
Engineering AG
Zeughausstrasse 43, 8004 Zurich, Switzerland

S Schweizerischer Kalibrierdienst
C Service suisse d'étalonnage
Servizio svizzero di taratura
S Swiss Calibration Service

Accredited by the Swiss Accreditation Service (SAS)
The Swiss Accreditation Service is one of the signatories to the EA Multilateral Agreement for the recognition of calibration certificates

Accreditation No.: SCS 0108

Client DT&C (Dymstec)

Certificate No: D900V2-1d175_Jul18

CALIBRATION CERTIFICATE

Object	D900V2 - SN:1d175
Calibration procedure(s)	QA CAL-05.v10 Calibration procedure for dipole validation kits above 700 MHz
Calibration date:	July 24, 2018

This calibration certificate documents the traceability to national standards, which realize the physical units of measurements (SI).
The measurements and the uncertainties with confidence probability are given on the following pages and are part of the certificate.

All calibrations have been conducted in the closed laboratory facility: environment temperature (22 ± 3)°C and humidity < 70%.

Calibration Equipment used (M&TE critical for calibration)

Primary Standards	ID #	Cal Date (Certificate No.)	Scheduled Calibration
Power meter NRP	SN: 104778	04-Apr-18 (No. 217-02672/02673)	Apr-19
Power sensor NRP-Z91	SN: 103244	04-Apr-18 (No. 217-02672)	Apr-19
Power sensor NRP-Z91	SN: 103245	04-Apr-18 (No. 217-02673)	Apr-19
Reference 20 dB Attenuator	SN: 5058 (20k)	04-Apr-18 (No. 217-02682)	Apr-19
Type-N mismatch combination	SN: 5047.2 / 06327	04-Apr-18 (No. 217-02683)	Apr-19
Reference Probe EX3DV4	SN: 7349	30-Dec-17 (No. EX3-7349_Dec17)	Dec-18
DAE4	SN: 601	26-Oct-17 (No. DAE4-601_Oct17)	Oct-18

Secondary Standards	ID #	Check Date (in house)	Scheduled Check
Power meter EPM-442A	SN: GB37480704	07-Oct-15 (in house check Oct-16)	In house check: Oct-18
Power sensor HP 8481A	SN: US37292783	07-Oct-15 (in house check Oct-16)	In house check: Oct-18
Power sensor HP 8481A	SN: MY41092317	07-Oct-15 (in house check Oct-16)	In house check: Oct-18
RF generator R&S SMT-06	SN: 100972	15-Jun-15 (in house check Oct-16)	In house check: Oct-18
Network Analyzer Agilent E8358A	SN: US41080477	31-Mar-14 (in house check Oct-17)	In house check: Oct-18

	Name	Function	Signature
Calibrated by:	Manu Seitz	Laboratory Technician	
Approved by:	Katja Pokovic	Technical Manager	

Issued: July 24, 2018

This calibration certificate shall not be reproduced except in full without written approval of the laboratory.

Calibration Laboratory of
Schmid & Partner
Engineering AG
Zeughausstrasse 43, 8004 Zurich, Switzerland

S Schweizerischer Kalibrierdienst
C Service suisse d'étalonnage
Servizio svizzero di taratura
S Swiss Calibration Service

Accredited by the Swiss Accreditation Service (SAS)
The Swiss Accreditation Service is one of the signatories to the EA Multilateral Agreement for the recognition of calibration certificates

Accreditation No.: SCS 0108

Glossary:

TSL	tissue simulating liquid
ConvF	sensitivity in TSL / NORM x,y,z
N/A	not applicable or not measured

Calibration is Performed According to the Following Standards:

a) IEEE Std 1528-2013, "IEEE Recommended Practice for Determining the Peak Spatial-Averaged Specific Absorption Rate (SAR) in the Human Head from Wireless Communications Devices: Measurement Techniques", June 2013
b) IEC 62209-1, "Measurement procedure for the assessment of Specific Absorption Rate (SAR) from hand-held and body-mounted devices used next to the ear (frequency range of 300 MHz to 6 GHz)", July 2016
c) IEC 62209-2, "Procedure to determine the Specific Absorption Rate (SAR) for wireless communication devices used in close proximity to the human body (frequency range of 30 MHz to 6 GHz)", March 2010
d) KDB 865664, "SAR Measurement Requirements for 100 MHz to 6 GHz"

Additional Documentation:

e) DASY4/5 System Handbook

Methods Applied and Interpretation of Parameters:

- *Measurement Conditions:* Further details are available from the Validation Report at the end of the certificate. All figures stated in the certificate are valid at the frequency indicated.
- *Antenna Parameters with TSL:* The dipole is mounted with the spacer to position its feed point exactly below the center marking of the flat phantom section, with the arms oriented parallel to the body axis.
- *Feed Point Impedance and Return Loss:* These parameters are measured with the dipole positioned under the liquid filled phantom. The impedance stated is transformed from the measurement at the SMA connector to the feed point. The Return Loss ensures low reflected power. No uncertainty required.
- *Electrical Delay:* One-way delay between the SMA connector and the antenna feed point. No uncertainty required.
- *SAR measured:* SAR measured at the stated antenna input power.
- *SAR normalized:* SAR as measured, normalized to an input power of 1 W at the antenna connector.
- *SAR for nominal TSL parameters:* The measured TSL parameters are used to calculate the nominal SAR result.

The reported uncertainty of measurement is stated as the standard uncertainty of measurement multiplied by the coverage factor k=2, which for a normal distribution corresponds to a coverage probability of approximately 95%.

Measurement Conditions

DASY system configuration, as far as not given on page 1.

DASY Version	DASY5	V52.10.1
Extrapolation	Advanced Extrapolation	
Phantom	Modular Flat Phantom	
Distance Dipole Center - TSL	15 mm	with Spacer
Zoom Scan Resolution	dx, dy, dz = 5 mm	
Frequency	900 MHz ± 1 MHz	

Head TSL parameters

The following parameters and calculations were applied.

	Temperature	**Permittivity**	**Conductivity**
Nominal Head TSL parameters	22.0 °C	41.5	0.97 mho/m
Measured Head TSL parameters	(22.0 ± 0.2) °C	40.6 ± 6 %	0.95 mho/m ± 6 %
Head TSL temperature change during test	< 0.5 °C	----	----

SAR result with Head TSL

SAR averaged over 1 cm³ (1 g) of Head TSL	Condition	
SAR measured	250 mW input power	2.65 W/kg
SAR for nominal Head TSL parameters	normalized to 1W	**10.7 W/kg ± 17.0 % (k=2)**

SAR averaged over 10 cm³ (10 g) of Head TSL	condition	
SAR measured	250 mW input power	1.69 W/kg
SAR for nominal Head TSL parameters	normalized to 1W	**6.82 W/kg ± 16.5 % (k=2)**

Body TSL parameters

The following parameters and calculations were applied.

	Temperature	**Permittivity**	**Conductivity**
Nominal Body TSL parameters	22.0 °C	55.0	1.05 mho/m
Measured Body TSL parameters	(22.0 ± 0.2) °C	55.0 ± 6 %	1.01 mho/m ± 6 %
Body TSL temperature change during test	< 0.5 °C	----	----

SAR result with Body TSL

SAR averaged over 1 cm³ (1 g) of Body TSL	Condition	
SAR measured	250 mW input power	2.69 W/kg
SAR for nominal Body TSL parameters	normalized to 1W	**11.1 W/kg ± 17.0 % (k=2)**

SAR averaged over 10 cm³ (10 g) of Body TSL	condition	
SAR measured	250 mW input power	1.75 W/kg
SAR for nominal Body TSL parameters	normalized to 1W	**7.16 W/kg ± 16.5 % (k=2)**

Appendix (Additional assessments outside the scope of SCS 0108)

Antenna Parameters with Head TSL

Impedance, transformed to feed point	52.2 Ω + 0.9 jΩ
Return Loss	- 32.7 dB

Antenna Parameters with Body TSL

Impedance, transformed to feed point	47.0 Ω - 2.7 jΩ
Return Loss	- 27.6 dB

General Antenna Parameters and Design

Electrical Delay (one direction)	1.410 ns

After long term use with 100W radiated power, only a slight warming of the dipole near the feedpoint can be measured.

The dipole is made of standard semirigid coaxial cable. The center conductor of the feeding line is directly connected to the second arm of the dipole. The antenna is therefore short-circuited for DC-signals. On some of the dipoles, small end caps are added to the dipole arms in order to improve matching when loaded according to the position as explained in the "Measurement Conditions" paragraph. The SAR data are not affected by this change. The overall dipole length is still according to the Standard.
No excessive force must be applied to the dipole arms, because they might bend or the soldered connections near the feedpoint may be damaged.

Additional EUT Data

Manufactured by	SPEAG
Manufactured on	January 16, 2014

DASY5 Validation Report for Head TSL

Date: 24.07.2018

Test Laboratory: SPEAG, Zurich, Switzerland

DUT: Dipole 900 MHz; Type: D900V2; Serial: D900V2 - SN:1d175

Communication System: UID 0 - CW; Frequency: 900 MHz
Medium parameters used: f = 900 MHz; σ = 0.95 S/m; ε_r = 40.6; ρ = 1000 kg/m^3
Phantom section: Flat Section
Measurement Standard: DASY5 (IEEE/IEC/ANSI C63.19-2011)

DASY52 Configuration:

- Probe: EX3DV4 - SN7349; ConvF(9.71, 9.71, 9.71) @ 900 MHz; Calibrated: 30.12.2017
- Sensor-Surface: 1.4mm (Mechanical Surface Detection)
- Electronics: DAE4 Sn601; Calibrated: 26.10.2017
- Phantom: Flat Phantom 4.9 (front); Type: QD 00L P49 AA; Serial: 1001
- DASY52 52.10.1(1476); SEMCAD X 14.6.11(7439)

Dipole Calibration for Head Tissue/Pin=250 mW, d=15mm/Zoom Scan (7x7x7)/Cube 0:

Measurement grid: dx=5mm, dy=5mm, dz=5mm
Reference Value = 64.70 V/m; Power Drift = -0.01 dB
Peak SAR (extrapolated) = 4.02 W/kg
SAR(1 g) = 2.65 W/kg; SAR(10 g) = 1.69 W/kg
Maximum value of SAR (measured) = 3.56 W/kg

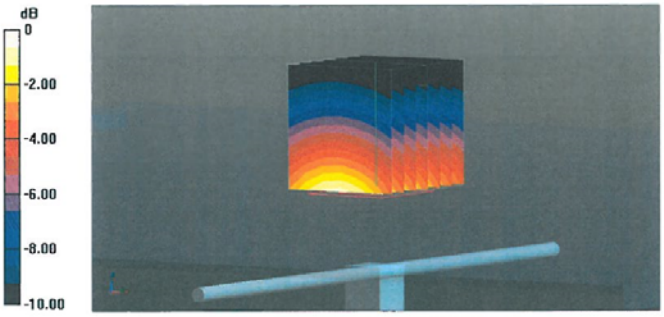

0 dB = 3.56 W/kg = 5.51 dBW/kg

Impedance Measurement Plot for Head TSL

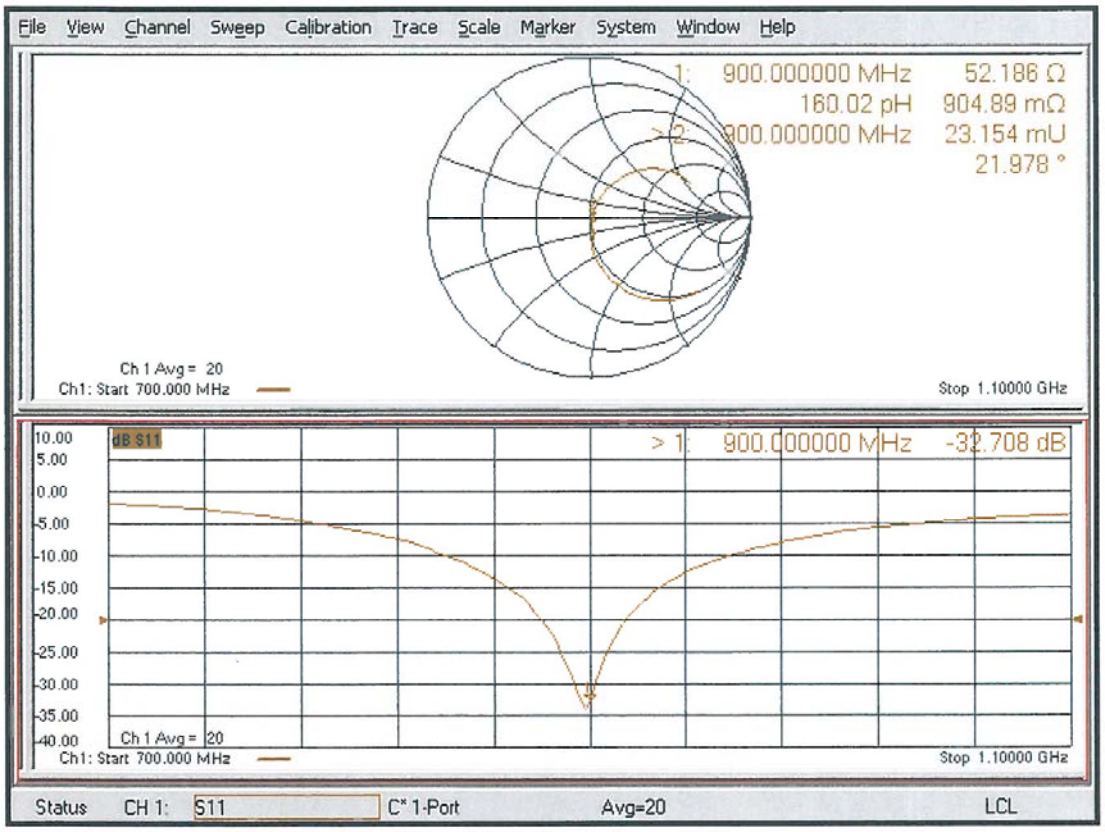

DASY5 Validation Report for Body TSL

Date: 23.07.2018

Test Laboratory: SPEAG, Zurich, Switzerland

DUT: Dipole 900 MHz; Type: D900V2; Serial: D900V2 - SN:1d175

Communication System: UID 0 - CW; Frequency: 900 MHz
Medium parameters used: f = 900 MHz; σ = 1.01 S/m; ε_r = 55; ρ = 1000 kg/m^3
Phantom section: Flat Section
Measurement Standard: DASY5 (IEEE/IEC/ANSI C63.19-2011)

DASY52 Configuration:

- Probe: EX3DV4 - SN7349; ConvF(9.83, 9.83, 9.83) @ 900 MHz; Calibrated: 30.12.2017
- Sensor-Surface: 1.4mm (Mechanical Surface Detection)
- Electronics: DAE4 Sn601; Calibrated: 26.10.2017
- Phantom: Flat Phantom 4.9 (Back); Type: QD 00R P49 AA; Serial: 1005
- DASY52 52.10.1(1476); SEMCAD X 14.6.11(7439)

Dipole Calibration for Body Tissue/Pin=250 mW, d=15mm/Zoom Scan (7x7x7)/Cube 0:

Measurement grid: dx=5mm, dy=5mm, dz=5mm
Reference Value = 63.29 V/m; Power Drift = -0.05 dB
Peak SAR (extrapolated) = 3.92 W/kg
SAR(1 g) = 2.69 W/kg; SAR(10 g) = 1.75 W/kg
Maximum value of SAR (measured) = 3.55 W/kg

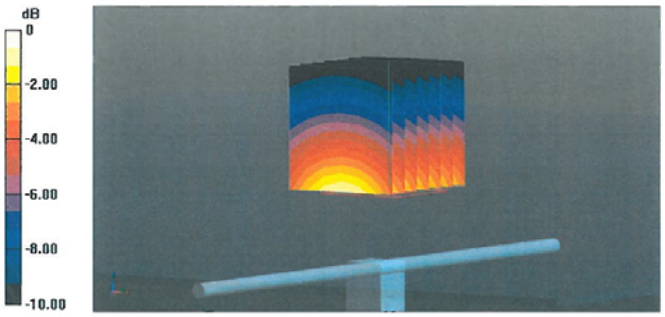

0 dB = 3.55 W/kg = 5.50 dBW/kg

Impedance Measurement Plot for Body TSL

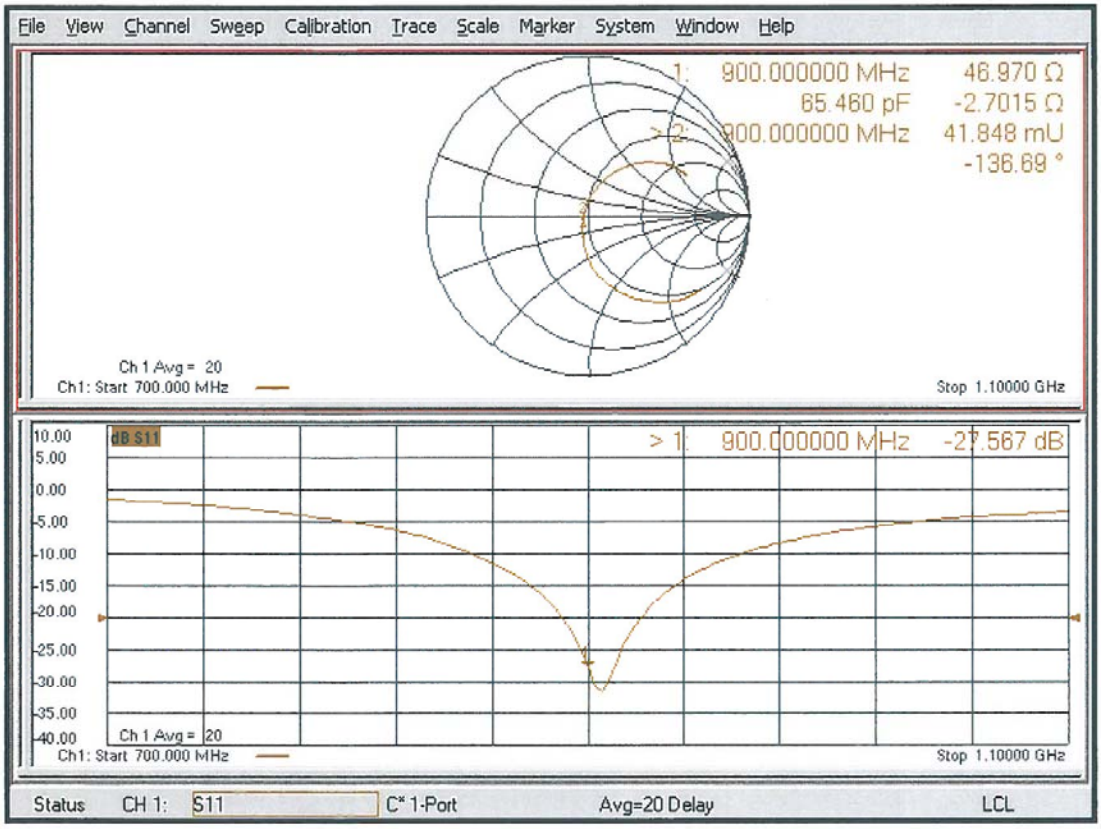

Attachment 3. – SAR SYSTEM VALIDATION

SAR System Validation

Per FCC KDB 865664 D02v01r02, SAR system validation status should be documented to confirm measurement accuracy. The SAR systems (including SAR probes, system components and software versions) used for this device were validated against its performance specifications prior to the SAR measurements. Reference dipoles were used with the required tissue- equivalent media for system validation, according to the procedures outlined in FCC KDB 865664 D01v01r04 and IEEE 1528-2013.Since SAR probe calibrations are frequency dependent, each probe calibration point was validated at a frequency within the valid frequency range of the probe calibration point, using the system that normally operates with the probe for routine SAR measurements and according to the required tissue-equivalent media.

A tabulated summary of the system validation status including the validation date(s), measurement frequencies, SAR probes and tissue dielectric parameters has been included.

Table Attachment 3.1 SAR System Validation Summary

SAR System	Freq. [MHz]	Date	Probe SN	Probe Type	Probe CAL. Point		PERM.	COND.	CW Validation			MOD. Validation		
							(εr)	(σ)	Sensi-tivity	Probe Linearity	Probe Isortopy	MOD. Type	Duty Factor	PAR
B	900	2018.06.18	3866	EX3DV4	900	Body	54.338	1.032	PASS	PASS	PASS	N/A	N/A	N/A

NOTE: While the probes have been calibrated for both a CW and modulated signals, all measurements were performed using communication systems calibrated for CW signals only. Modulations in the table above represent test configurations for which the measurement system has been validated per FCC KDB Publication 865664 D01v01r04 for scenarios when CW probe calibrations are used with other signal types. SAR systems were validated for modulated signals with a periodic duty cycle, such as GMSK, or with a high peak to average ratio (>5 dB), such as OFDM according to KDB 865664.