SM5100B Module Test Board

User Manual

Version: 1.0.0

HW-SM5100B-UG-0001

2003-11-27

www.spreadtrum.com

Spreadtrum reserves the right to change or discontinue this product without notice.

IMPORTANT NOTICE

COPYRIGHT NOTICE

Copyright © 2003, Spreadtrum Communications, Inc. All rights reserved.

TRADEMARKS
Spreadtrum Communications, Inc. and Spreadtrum Communications, Inc.'s products are exclusively owned by Spreadtrum Communications, Inc.. References to other companies and their products use trademarks owned by the respective companies and are for reference purpose only.

WARRANTY DISCLAIMER
Spreadtrum Communications, Inc. makes no representations or warranties, either express or implied, by or with respect to anything in this document, and shall not be liable for any implied warranties of merchantability or fitness for a particular purpose or for any indirect, special or consequential damages.

CONFIDENTIALITY
The information contained herein (including any attachments) is confidential. The recipient hereby acknowledges the confidentiality of this document, and except for the specific purpose, this document shall not be disclosed to any third party.

Table of Contents

1 Purpose 5
2 General Introduction to SM5100B TEST BOARD....6
2.1 Brief Introduction to SM5100B Module....6
2.1.1 RF Functionality....6
2.1.2 Baseband Functionality....6
2.1.3 Memory Functionality....6
2.2 Overview of SM5100B TEST BOARD....6
2.3 Function Block of SM5100B TEST BOARD....8
3 Functionality Part....9
3.1 Power Management Part....9
3.1.1 Relevant Function Requirements of SM5100B Module....9
3.1.2 Test Design in SM5100B TEST BOARD....9
3.1.3 Pin Definition of Relevant Connector....10
3.2 SIM Card Part....10
3.2.1 Relevant Function Requirements of SM5100B Module....10
3.2.2 Test Design in SM5100B TEST BOARD....10
3.3 Keyboard Part....11
3.3.1 Relevant Function Requirements of SM5100B Module....11
3.3.2 Test Design in SM5100B TEST BOARD....11
3.3.3 Pin Definition of Relevant Connector....11
3.4 LCD Display Part....12
3.4.1 Relevant Function Requirements of SM5100B Module....12
3.4.2 Test Design in SM5100B TEST BOARD....12
3.4.3 Pin Definition of Relevant Connector....13
3.5 Serial Port Part....14
3.5.1 Relevant Function Requirements of SM5100B Module....14
3.5.2 Test Design in SM5100B TEST BOARD....14
3.5.3 Pin Definition of Relevant Connector....15
3.6 Memory Part....16
3.6.1 Relevant Function Requirements of SM5100B Module....16
3.6.2 Test Design in SM5100B TEST BOARD....16
3.7 Audio Part....16
3.7.1 Relevant Function Requirements of SM5100B Module....16
3.7.2 Test Design in SM5100B TEST BOARD....17
3.7.3 Pin Definition of Relevant Connector....18
3.8 RF Part....19
3.8.1 Relevant Function Requirements of SM5100B Module....19
3.8.2 Test Design in SM5100B TEST BOARD....19
3.9 General Interface Part....20
3.9.1 Relevant Function Requirements of SM5100B Module....20
3.9.2 Test Design in SM5100B TEST BOARD....20
3.10 System Function Part....21
3.10.1 Relevant Function Requirements of SM5100B TEST BOARD....21
3.10.2 Test Design in SM5100B TEST BOARD....22
3.10.3 Pin Definition of Relevant Connector....22
4 Test Setup....24
5 Installation&Operation Procedure....25
5.1 Installation Procedure....25
5.2 Operation Procedure....25
5.3 Download Software Procedure....26
5.3.1 Graphic User Interface....26
5.3.2 Toolbar....26
5.3.3 Status Window....27
5.3.4 Setting Dialog....28
Reference Documents....30
Appendix A: Pin Arrangement....31
Appendix B : Safety Information....316
End of Document....36

Spreadtrum reserves the right to change or discontinue this product without notice.

List of Figures

Figure 1: Overview of SM5100B TEST BOARD 7
Figure 2: Function Block Diagram 8
Figure 3: Test Design of Power Management Part 9
Figure 4: Test Design of SIM Card Part 10
Figure 5: Test Design of Keyboard Part 11
Figure 6: Keyboard Map 12
Figure 7: Test Design of LCD Display Part 12
Figure 8: Test Design of Serial Port Part 14
Figure 9: Test Design of Memory Part 16
Figure 10: Test Design of Audio Part 17
Figure 11: Audio Frequency Response Curve 17
Figure 12: Test Design of General Interface Part 21
Figure 13: Test Setup Diagram 24

List of Tables

Table 1: Typical Microphone Input Characteristics 17
Table 2: Typical Speaker Output Characteristics 18
Table 3: RF Specification for Normal MS 20
Table 4: Pin Arrangement of SM5100B Module Based on 100-Pin Sequence 31
Table 5: Pin Arrangement of SM5100B Module Based on 60-Pin Sequence 34

Spreadtrum reserves the right to change or discontinue this product without notice.

1 Purpose

SM5100B module is Spreadtrum's GSM/GPRS wireless module. It can supply powerful GSM/GPRS voice and data services and may be used in various wireless products with easy design for our customers. Rich features and light weight also are bright spots of this module.

This document gives a detail function description, system setup and operation procedure to SM5100B TEST BOARD.

Spreadtrum also provide a series of windows based test tools, which control module status by AT command and display the module status.

Spreadtrum reserves the right to change or discontinue this product without notice.

2 General Introduction to SM5100B TEST BOARD

SM5100B TEST BOARD is an Test board for SM5100B module. SM5100B is Spreadtrum phone module and its functionality is introduced briefly in chapter 2.1.

2.1 Brief Introduction to SM5100B Module

SM5100B is a miniature, single-side board, tri-band GSM850/DCS/PCS module, ready for integration in various kind of desktop wireless phones, cellular phones and other wireless devices. Main characteristics of module show below:

2.1.1 RF Functionality

The RF part of this module converts RF signals to baseband for receiver chain and translates baseband signals into RF frequency spectrum. It consists of RF transceiver chipset, multi-band PA with PA controller, frequency synthesizer chip, crystal oscillator, switchplexer module, and super low noise voltage regulator.

The operating frequencies are:
Rx (GSM 850): 824 to 849MHz
Tx (GSM 850): 869 to 894MHz

Rx (DCS 1800): 1805 to 1880MHz
Tx (DCS 1800): 1710 to 1785MHz

Rx (PCS 1900): 1930 to 1990MHz
Tx (PCS 1900): 1850 to 1910MHz

2.1.2 Baseband Functionality

The baseband part of SM5100B is composed of a SPREADTRUM's SC6600B chip which is low power and low voltage device in 0.18 um mixed signal CMOS technology. SC6600B provides a single-chip solution to wireless tri-band telephone handsets and data modems conforming to the GSM Release 1999, DCS1800 and PCS1900.

2.1.3 Memory Functionality

The memory used in this module is a combination of 64 Megabit (8M x 8-Bit \ 4M x 16-Bit) flash memory and 8 Megabit (1M x 8-Bit \ 512K x 16-Bit) SRAM. The flash is CMOS 3.0V Volt-only and simultaneous operating. The memory also may be other capability according to various requirements. The land pattern is pin-to-pin compatible.

2.2 Overview of SM5100B TEST BOARD

The overview picture of SM5100B TEST BOARD shows in figure 1.

Board dimension is 7.87 inches X 5.91 inches.

The board is housed in a 7.10 inches X 9.10 inches X 2.00 inches Aluminium box show in figure 1.1.

Spreadtrum reserves the right to change or discontinue this product without notice.

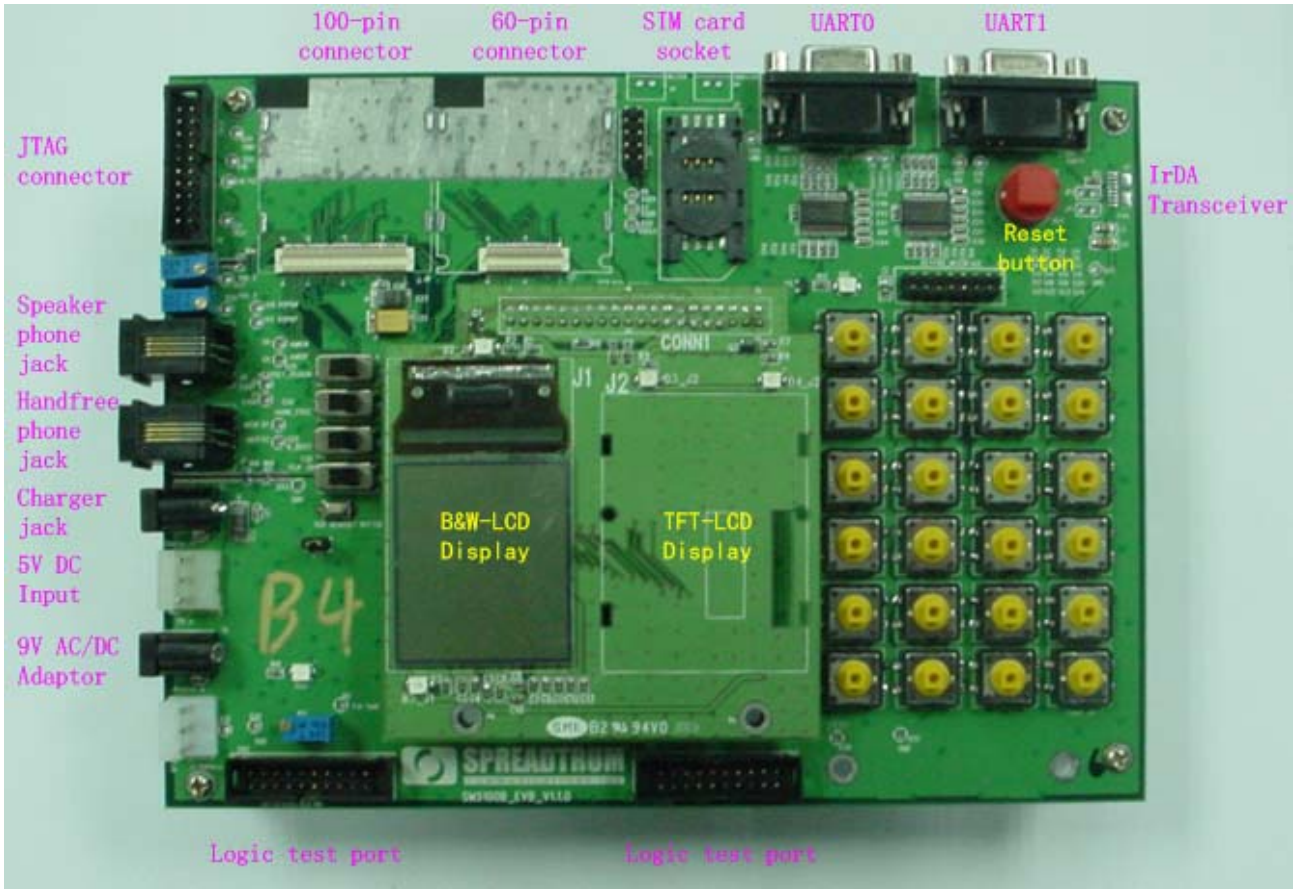

Figure 1: Overview of SM5100B TEST BOARD

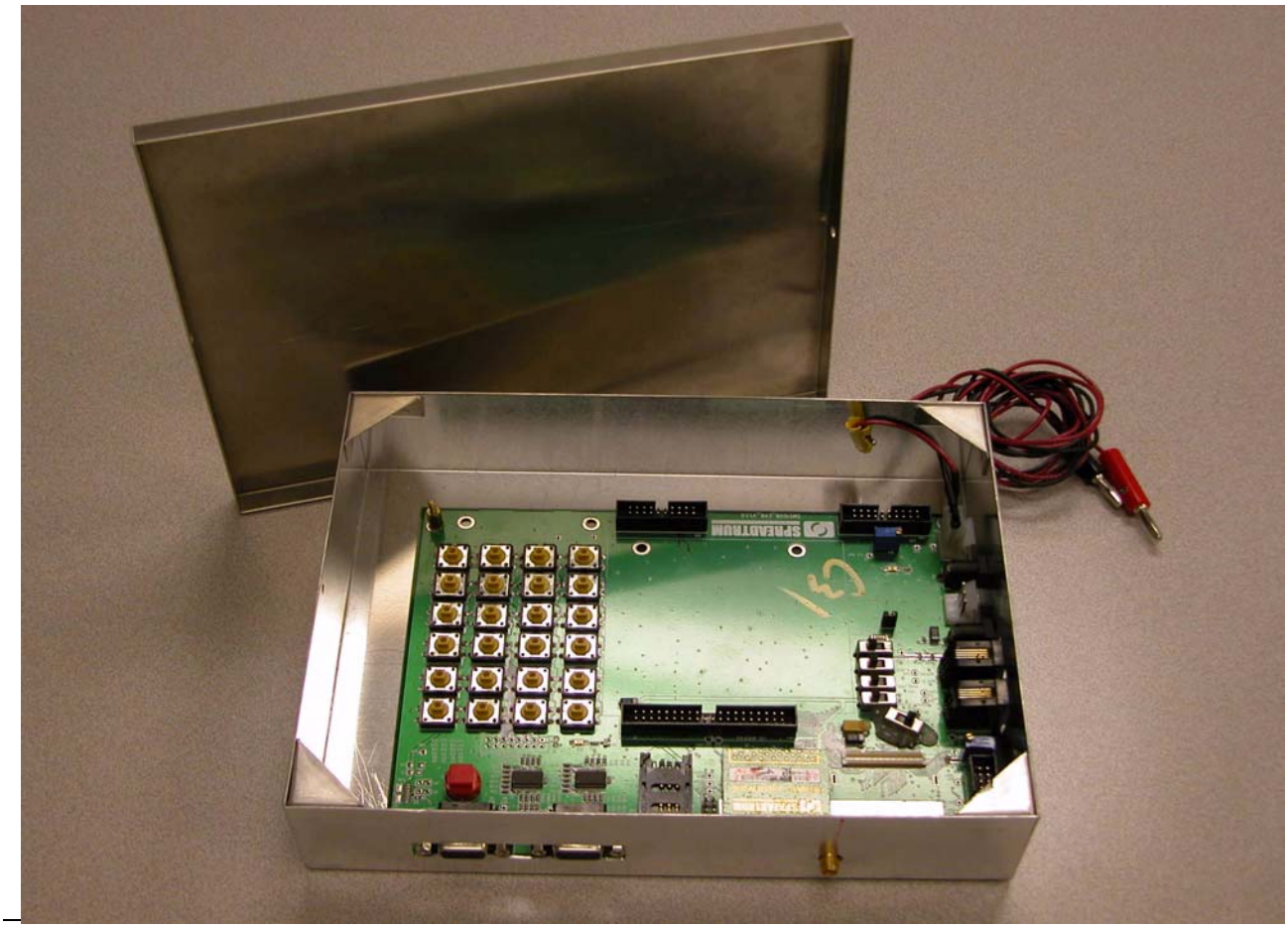

Spreadtrum reserves the right to change or discontinue this product without notice.

Figure 1.1 SM5100B TEST BOARD

2.3 FUNCTION BLOCK OF SM5100B TEST BOARD

Figure 2 shows function block diagram of SM5100B TEST BOARD.

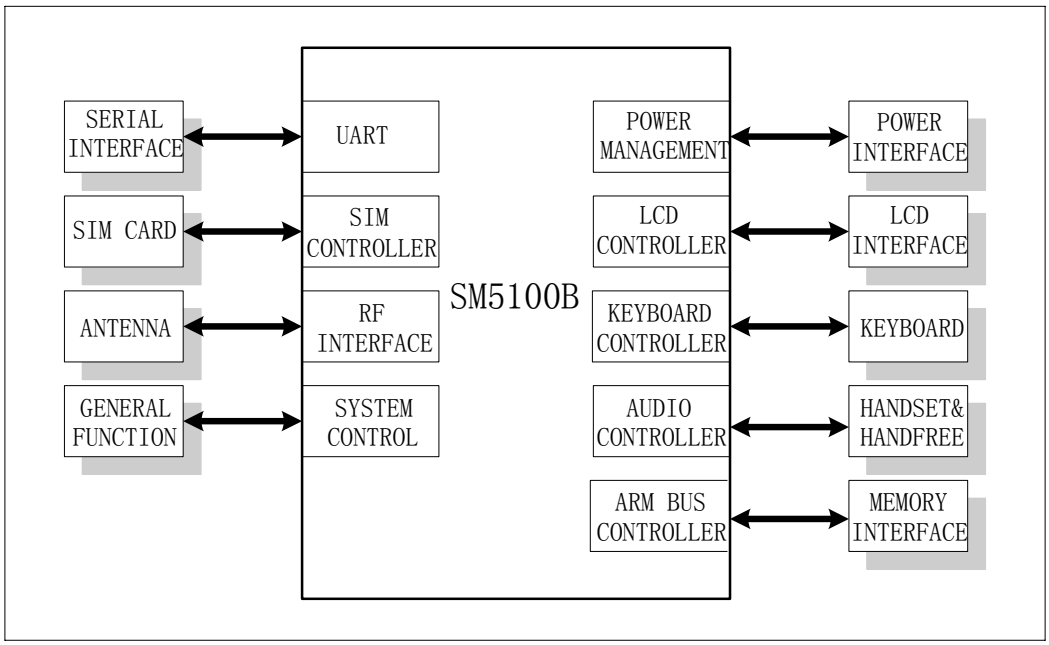

Figure 2: Function Block Diagram

SM5100B TEST BOARD supplies various function circuits and interfaces to evaluate features and functions of SM5100B module.

- Power management interface
- SIM card interface
- Keyboard interface
- LCD display interface
- Serial port interface
- Memory interface
- Audio interface
- RF interface
- General interface
- System function interface

Spreadtrum reserves the right to change or discontinue this product without notice.

3 Functionality Part

Functionality parts of SM5100B TEST BOARD are described in detail in this chapter.

3.1 Power Management Part

3.1.1 Relevant Function Requirements of SM5100B Module

- Work on 3.6V DC (direct connection to Li-ion battery pack)
- Support internal battery charging circuit for Li-ion battery
- Support monitoring battery status, such as measuring voltage and temperature
- Support a 16-bit Real-Time Clock
- Power consumption :
  - power-down mode < 30 uA
  - sleep mode < 3.0 mA
  - idle mode < 9.0 mA
  - communication mode (average) < 350 mA
  - communication mode (peak during TX slot) < 1600 mA

3.1.2 Test Design in SM5100B TEST BOARD

Relevant function requirement of SM5100B module should be evaluated in TEST BOARD. Figure 3 shows Test design of power management part.

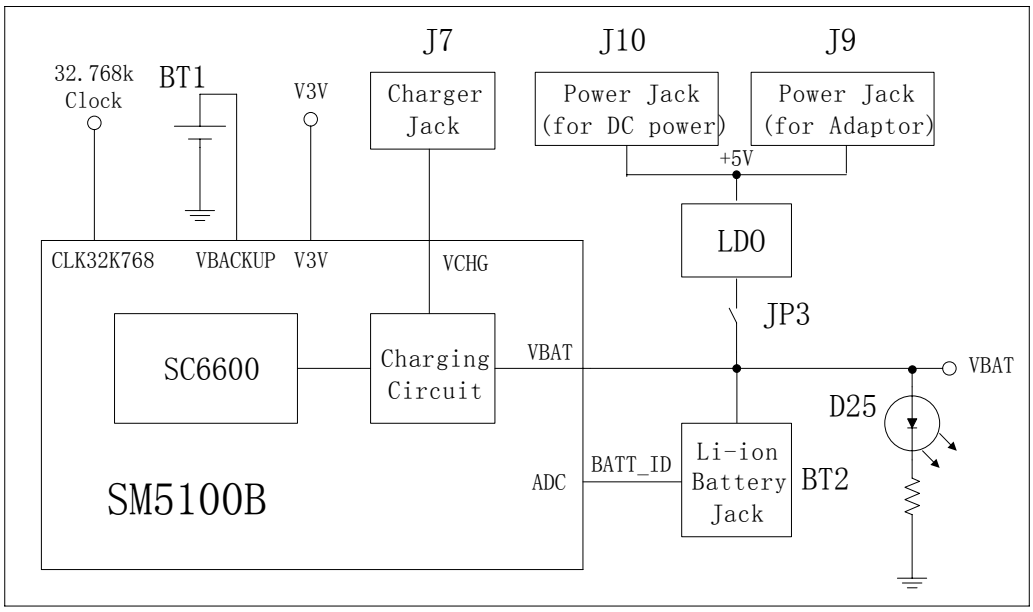

Figure 3: Test Design of Power Management Part

Work voltage range of SM5100B module is DC 3.2V~4.2V and nominal value is 3.6V. This power supply may be got directly from 3.6V Li-ion battery, as well as from external DC power supply (jack J9 or J10) through 3.6V LDO conversion. J9 is connected to an AC/DC converter and J10 is connected to a DC regulated power supply. JP3 is a switch which decides if external DC power supply is enabled. Voltage value of external DC power supply should be limited in 5V~10V. D25 is a LED to indicate VBAT status.

SM5100B module embeds Li-ion charging circuit. Jack J7 supplies charging power supply and voltage range is 5V~8V. Charging current value depends on the battery capacity. It is recommended to provide a current equal 2/3C. The default charge current setting in module is 500mA. Detection of VCHG status

Spreadtrum reserves the right to change or discontinue this product without notice.

and control of charging process are performed by charging circuit in module. Li-ion battery is connected via jack BT2 and its status such as battery type may be detected via ADC input pin.

Jack BT1 may be button battery or big capacitor which supplies RTC circuit of module. Clock 32.768kHz may be outputted once RTC circuit works normally.

VBAT and V3V are outputted from module and may supply power to relevant circuit of TEST BOARD. Power consumption of SM5100B module in each mode may be verified via test instrument.

3.1.3 Pin Definition of Relevant Connector

Connector	Connector Name	Pin No.	Pin Name
J10	Power jack for DC power	1	+5V
		2	NC
		3	GND
J9	Power jack for adaptor	1	+5V
		2	GND
		3	GND
BT2	Li-ion battery jack	1	VBAT
		2	BATT_ID
		3	GND
J7	Charger jack	1	VCHG
		2	GND
		3	GND

3.2 SIM Card Part

3.2.1 Relevant Function Requirements of SM5100B Module

- Support 3.0V SIM card while 5V SIM card should be automatically rejected with warnings
- Support SIM application Toolkit Release 99
- Support SIM network and service provider locks

3.2.2 Test Design in SM5100B TEST BOARD

Relevant function requirement of SM5100B module should be evaluated in TEST BOARD. Figure 4 shows Test design of SIM card part.

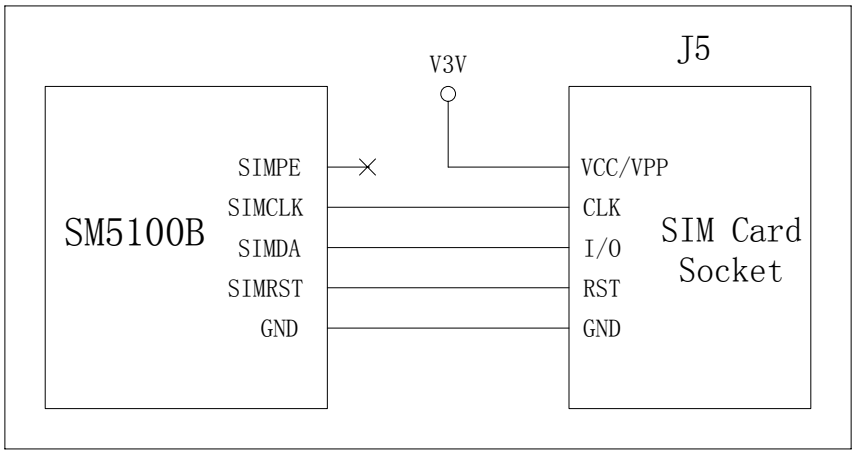

Figure 4: Test Design of SIM Card Part

Spreadtrum reserves the right to change or discontinue this product without notice.

The SIM card interface is compatible with the ISO 7816-3 IC card standard on the issues required by the GSM 11.11 Phase 2+ standard. The module also supports Release 99 of the SIM Toolkit recommendation.

J5 is a special socket to insert SIM card. SM5100B module may transfer data from/to a SIM card in an asynchronous fashion with half duplex mode through this interface. 5V SIM card or faulty SIM card will be automatically rejected with warnings if it is inserted to SIM card socket.

SIM card may be locked through relevant command or setup of network and service provider.

3.3 Keyboard Part

3.3.1 Relevant Function Requirements of SM5100B Module

- ✧ Support 4x6 keypad size

3.3.2 Test Design in SM5100B TEST BOARD

Relevant function requirement of SM5100B module should be evaluated in TEST BOARD. Figure 5 shows Test design of keyboard part.

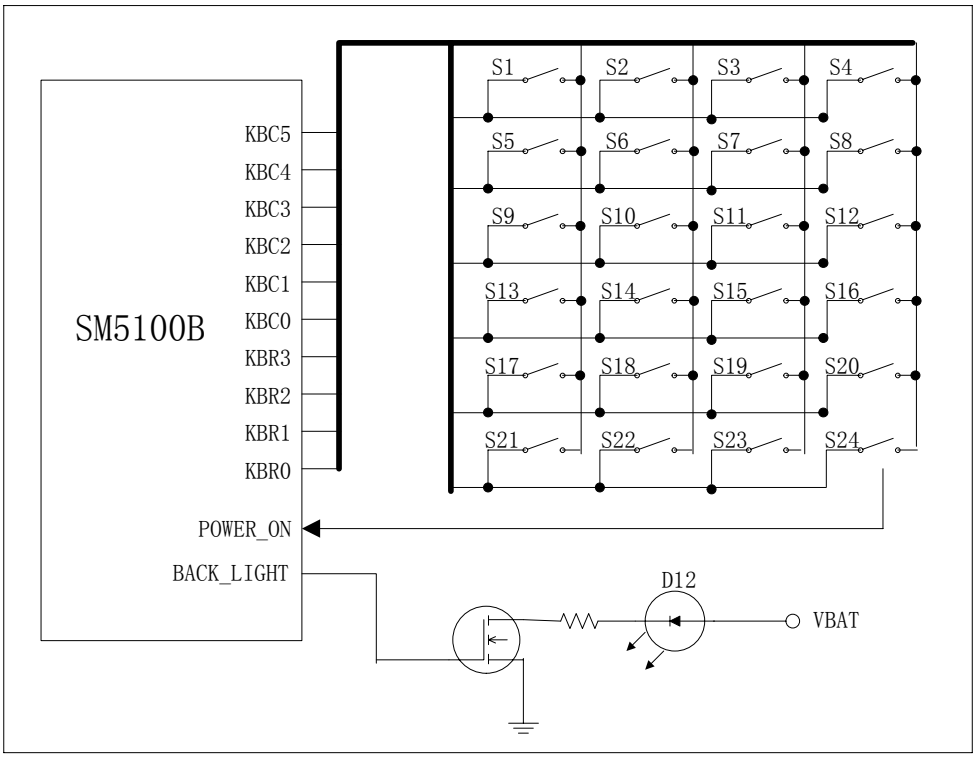

Figure 5: Test Design of Keyboard Part

SM5100B module supports 4x6 keyboard interface. S1~S24 are corresponding pushbutton. S24 is power on button and system may be powered on when pressing this button for some time in power off status. In addition, one GPIO pin is used as backlight control signal for keyboard and D12 is a LED used as keyboard backlight indication.

The keyboard control logic may have two operation modes: non-time-out mode and time-out mode.

3.3.3 Pin Definition of Relevant Connector

Keyboard map shows below:

Spreadtrum reserves the right to change or discontinue this product without notice.

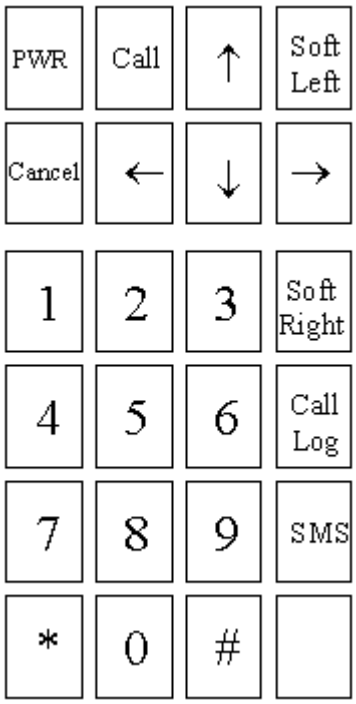

Figure 6: Keyboard Map

3.4 LCD Display Part

3.4.1 Relevant Function Requirements of SM5100B Module

- ✧ Support serial and parallel based color LCD
- ✧ Support dual color serial and/or parallel LCD
- ✧ Support at least 16 Bit Per Pixel (BPP) with size of 176x240 STN/TFT
- ✧ Support 15 FPS refresh rate on sizes of 176x144 or 176x124

3.4.2 Test Design in SM5100B TEST BOARD

Relevant function requirement of SM5100B module should be evaluated in TEST BOARD. Figure 7 shows Test design of LCD display part.

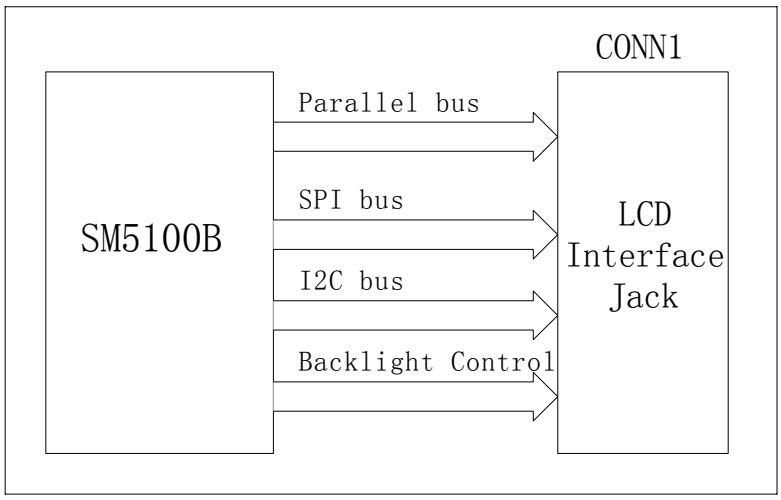

Figure 7: Test Design of LCD Display Part

Spreadtrum reserves the right to change or discontinue this product without notice.

Both parallel interface LCD and serial interface LCD may be evaluated in TEST BOARD. SM5100B module supplies 16-bit parallel port, serial port (SPI) and two-wire serial port (I^2C) to support LCD display. All signals of these interfaces are connected to jack conn1.

Parallel LCD interface utilizes ARM 16-bit parallel port and the maximum transfer speed should be up to 13Mbps. Parallel interface may support Dual-LCD, CS2 and CS3 are chip selection signal for two LCDs respectively. Serial LCD interface may realize through SPI bus and the maximum transfer speed should be up to 700kbps. In addition, serial LCD interface may also realize through I^2C bus and the maximum transfer speed should be up to 400kbps.

Color LCD may be evaluated through parallel port and mono LCD may be evaluated through SPI port or I^2C port.

Two GPIO pins of module are used as backlight control signal for two LCDs

3.4.3 Pin Definition of Relevant Connector

Connector	Connector Name	Pin No.	Pin Name
CONN1	LCD interface jack	1	D15
		2	D14
		3	D13
		4	D12
		5	D11
		6	D10
		7	D9
		8	D8
		9	D7
		10	D6
		11	D5
		12	D4
		13	D3
		14	D2
		15	D1
		16	D0
		17	GND
		18	CLCD_RD
		19	GND
		20	CLCD_A0
		21	ARM_CS3
		22	CLCD_RST
		23	CLCD_WR
		24	GND
		25	NC
		26	BACKLIGHT1
		27	/CS2
		28	A19
		29	SCK
		30	SDA
		31	GND
		32	SPI_LCD_CS
		33	LCD_RESET
		34	LCD_RS

Spreadtrum reserves the right to change or discontinue this product without notice.

		35	LCD_SCLK
		36	LCD_SIO
		37	BACKLIGHT2
		38	V3V
		39	V3V
		40	VBAT

3.5 Serial Port Part

3.5.1 Relevant Function Requirements of SM5100B Module

- ✧ Provide 2 UARTs with baud rate up to 460kbps. One UART should have hardware flow control capability
- ✧ Each UART should be configurable to be used for debugging, AT command operations, GPRS data, software upgrading or any other UART based operations
- ✧ Provide an IrDA supporting transmitting at 115kbps and receiving at 9.6kbps data rates
- ✧ Provide I^2C interface up to 800 kbps for master devices, with at least 400 kbps for slave devices
- ✧ Provide SPI interface up to 700 kbps, connecting to only one device
- ✧ AT command set in SM5100B should be compliant with GSM 07.07 and GSM 07.05 specifications
- ✧ Software (ARM and non-ROMized DSP code) in SM5100B should be able to be updated through UART connector

3.5.2 Test Design in SM5100B TEST BOARD

Relevant function requirement of SM5100B module should be evaluated in TEST BOARD. Figure 8 shows Test design of serial port part.

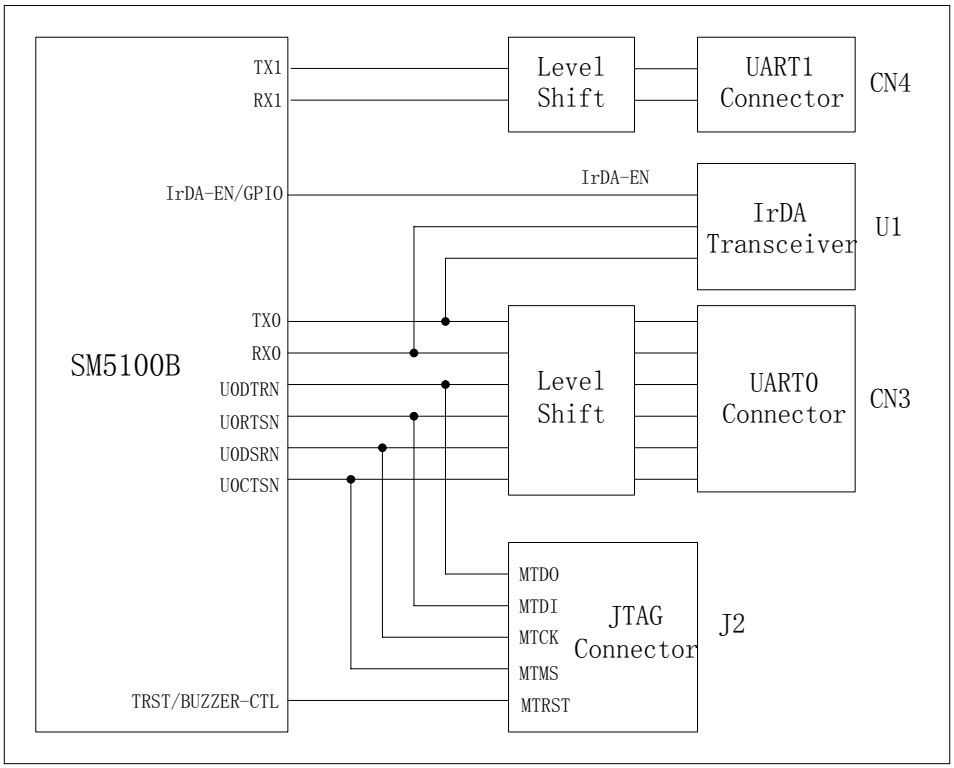

Figure 8: Test Design of Serial Port Part

Spreadtrum reserves the right to change or discontinue this product without notice.

Serial port interface of SM5100B module consists of two UART interfaces, two IrDA interfaces, one JTAG interface, one SPI interface and one I^2C interface. Test of SPI and I^2C interface have described in LCD display part, refer to chapter 3.4.

Both UARTs of SM5100B connect to relevant UART interfaces through electrical level shifter which realizes conversion between LVTTL level and RS232 level. CN3 is connector to evaluate UART0 and CN4 is connector to evaluate UART1. UART0 has hardware flow control capability and UART1 has not. Both UARTs are configurable to be used for debugging, AT command operations, software upgrading or any other UART based operations according to various software configurations. The maximal rate of UART should be up to 460kbps.

Hardware flow control pins of UART0 are shared with JTAG pins. J2 is connector to evaluate JTAG function. JTAG is disabled when hardware flow control function is used, and vice versa.

Both of the UART ports have a built-in IrDA controller. They can be configured to connect to an IrDA transceiver, resulting in one or two IrDA interfaces. UART controller is bypassed when used as IrDA port, and vice versa. U1 is an IrDA transceiver to evaluate IrDA function in TEST BOARD.

The IrDA controller inside SC6600 chip controls the off-chip infrared transceiver to transmit and receive serial infrared data. The modulation method of the transmitted data varies based on the data rates. Two classes of data rates are used in IrDA data exchange (2 slightly different modulation exists in the first class): slow data rates ranging from 2.4 k bits/s to 115 k bits/s, and fast data rates ranging from 115.2 k bits/s to 4 M bits/s. The supporting of the different modulation methods is left to the software to implement and the IrDA controller in module provides the waveform generation circuits for the data transmission and the receive signal edge detection circuits for the data receiving. This implementation achieves better compatibility but the MCU loading for the IrDA control is bigger.

SM5100B module may act as a wireless modem and communicate with host CPU by AT command set through UART. More detailed content please refer to <AT Command User Manual>.

3.5.3 Pin Definition of Relevant Connector

Connector	Connector Name	Pin No.	Pin Name
CN3	UART0 connector	1	NC
		2	RXD#
		3	TXD#
		4	DTRN#
		5	GND
		6	DSRN#
		7	RTSN#
		8	CTSN#
		9	NC
CN4	UART1 connector	2	RXD#
		3	TXD#
		5	GND
		1,4,6,7,8,9	NC
J2	JTAG connector	1,2	V3V
		3	TRST
		5	TDI
		7	TMS
		9	TCK
		13	TDO
		4,6,8,10,12, 14,16,18,20	GND
		11,15,17,19	NC

Spreadtrum reserves the right to change or discontinue this product without notice.

3.6 Memory Part

3.6.1 Relevant Function Requirements of SM5100B Module

- ✧ Support linear NOR flash static memory types in page mode
- ✧ Support 16/02, 32/04 and 64/08 Mbits different flash comb with pin-to-pin compatible in PCB layout, i.e. drop-in compatibility
- ✧ Support both Flash and SIM based phone book management

3.6.2 Test Design in SM5100B TEST BOARD

Relevant function requirement of SM5100B module should be evaluated in TEST BOARD. Figure 9 shows Test design of memory part.

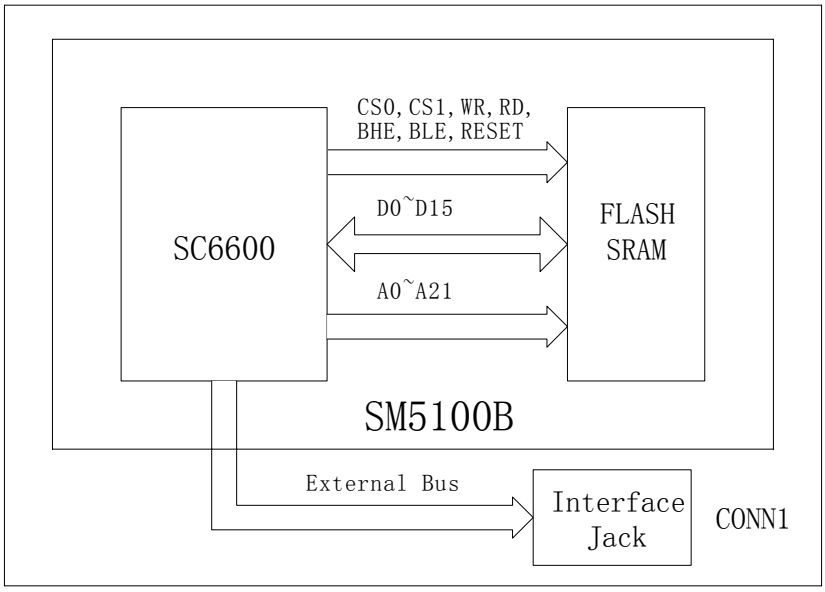

Figure 9: Test Design of Memory Part

SM5100B module embeds FLASH and SRAM. Boot programme may place in FLASH. 16/02, 32/04 and 64/08 Mbits different FLASH/SRAM memories are supported with pin-to-pin compatible in PCB layout.

SM5100B also supplies external bus to communicate with external device. External bus signals are connected to jack CONN1 which is also LCD interface jack. More information refers to chapter 3.4.

Phone book may be stored in SIM card or Flash, which may be performed through relevant menu on LCD.

3.7 Audio Part

3.7.1 Relevant Function Requirements of SM5100B Module

- ✧ Support two differential audio input/output
- ✧ Audio amplifier output of SM5100B should automatically switch between earphone handset speaker and hand-free speaker.
- ✧ Should drive up to 200mW speaker without external amplifier
- ✧ Support melody up to 16-channel with 16 KHz player rate and should be general MIDI compatible
- ✧ Support telephony feature
- ✧ Support emergency call

Spreadtrum reserves the right to change or discontinue this product without notice.

3.7.2 Test Design in SM5100B TEST BOARD

Relevant function requirement of SM5100B module should be evaluated in TEST BOARD. Figure 10 shows Test design of audio part.

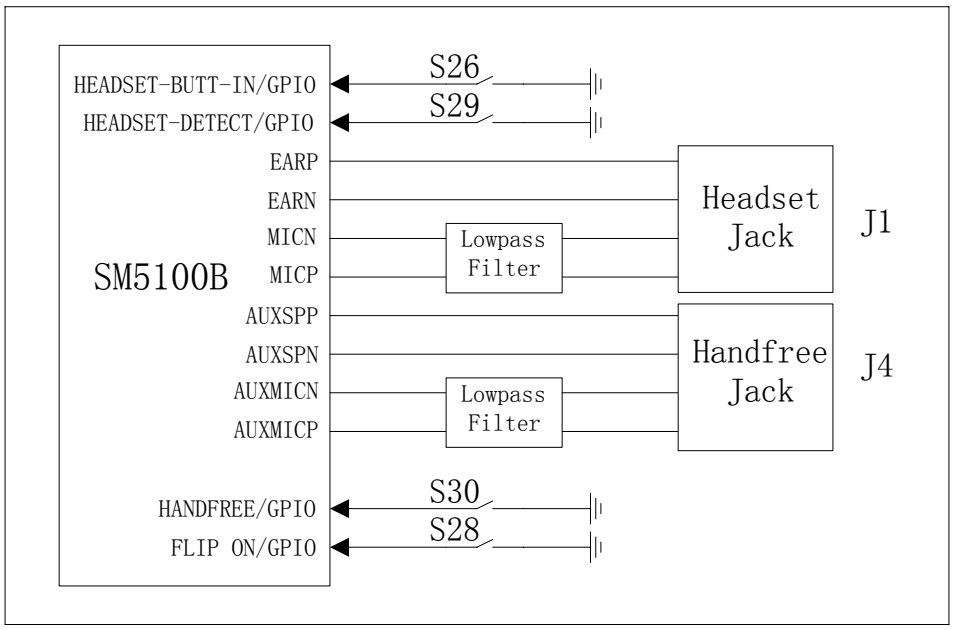

Figure 10: Test Design of Audio Part

SM5100B module supports two differential audio interfaces which connect to jack J1 and J4. J1 is used to evaluate headset call mode and J4 is used to evaluate hand-free call mode. S26 is a switch used to simulate a headset button. S29 is a switch used to simulate detecting of headset plug. S30 is a switch used to simulate hand-free pushbutton. S28 is a switch used to simulate flip on/off.

Audio interface may switch automatically between headset mode and hand-free mode according to external input control signals. These signals may be headset plug status, hand-free pushbutton status and flip on/off status. Both audio interfaces may drive up to 200mW speaker without external amplifier.

Melody function may be evaluated through menu on LCD step by step.

Audio frequency response curve is within the mask given by GSM specification.

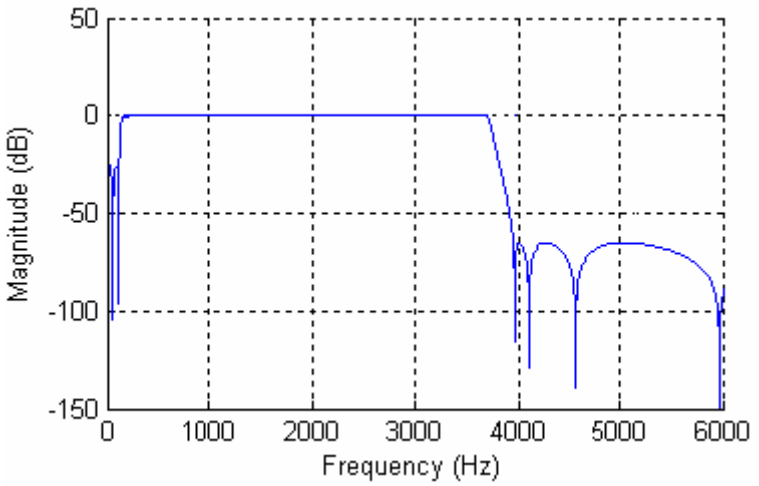

Figure 11: Audio Frequency Response Curve

Typical microphone input characteristics of SC6600 chip shows below.

Table 1: Typical Microphone Input Characteristics

Spreadtrum reserves the right to change or discontinue this product without notice.

Parameter	Conditions/Comments	Min.	Typ.	Max.	Units
Input common mode range		0.6		1.8	V
PGA gain range		0		33	dB
PGA gain step size			3		dB
Maximum analog input range after PGA	Differential			±1.5	V
Digital audio output sample rate			8		kHz
ADC resolution		13			bits
ADC signal to (noise + distortion) ratio			62		dB
Digital output word			16		bits

Typical speaker output characteristics of SC6600 shows below.

Table 2: Typical Speaker Output Characteristics

Parameter	Conditions/Comments	Min.	Typ.	Max.	Units
Maximum differential output voltage			±1.4		V
Maximum single-ended output voltage			1.4		V
Output common mode voltage			1.1		V
Minimum load resistance		16			Ω
PGA gain range		0		33	dB
PGA gain step size			3		dB

Recommended characteristics for the microphone Type: Electret

- Impedance: 2 to 3 kOhm
- Sensitivity: -40 to –50dB
- SNR > 50dB min
- Frequency response compatible with the GSM specifications

Recommended characteristics for the speaker in headset mode

- Type: 25 to 200mW, electro-magnetic
- Impedance: 16 to 150 Ohm
- Sensitivity: 110dB SPL min. (0dB = 120uPa)
- Frequency response compatible with the GSM specifications

Recommended characteristics for the speaker in hand-free mode

- Type: 0.5 to 1.5W, electro-magnetic
- Impedance: 4 to 8 Ohm
- Sensitivity: 86dB SPL min. (0dB = 120uPa)
- Frequency response compatible with the GSM specifications

3.7.3 Pin Definition of Relevant Connector

Connector	Connector Name	Pin No.	Pin Name
J1	Headset jack	1	EPP1
		2	EPN1
		3	MICP1
		4	MICN1
J4	Hand-free jack	1	AUXSPKP
		2	AUXSPKN
		3	AUXMICP
		4	AUXMICN

Spreadtrum reserves the right to change or discontinue this product without notice.

3.8 RF Part

3.8.1 Relevant Function Requirements of SM5100B Module

- Support GSM/GPRS standards, release V8.2.0 12/1999
- Support GSM/GPRS tri-band, GSM850MHz / DCS1800MHz / PCS1900MHz
- Support a single antenna interface for GSM / GPRS 850MHz / DCS1800MHz with MHC-201 connector for testing purpose and mobile connector for customer assembly

3.8.2 Test Design in SM5100B TEST BOARD

SM5100B module supports tri-band of GSM850MHz& DCS1800MHz& PCS1900MHz (for US market) and GPRS service. RF interface is designed inside SM5100B module. So Test design figure for RF part is abbreviatory.

One surface mount RF connector placed at the upper part of the module is used for RF testing purpose. One gold plated land pattern sitting at the corner of the module supports the RF connection that can be used by the application through spring contacts or a soldered RF cable. Since no standard spring contact is available for the module, this solution requires customization design for the contact.

The antenna should meet the following requirements:

- Frequency bands: Dual band GSM 850MHz & DCS 1800MHz

	GSM850	**DCS1800**
Frequency Rx	824 to 849MHz	1805 to 1880MHz
Frequency Tx	869 to 894MHz	1710 to 1785MHz

- Impedance: 50 ohm
- VSWR Tx max 2:1 / Rx max 2:1
- Typical radiated gain: 0dBi

The RF performance is compliant with the ETSI recommendation 05.05 and 11.10 (Normal MS requirements), as show in table3.

Spreadtrum reserves the right to change or discontinue this product without notice.

Table 3: RF Specification for Normal MS

Receiver	
GSM Sensitivity	<-104dBm
GSM1800 Sensitivity	<-102dBm
Selectivity @ 200KHz	>+9dBc
Selectivity @ 400KHz	>+41dBc
Dynamic Range	62dB
Intermodulation	>-43dBm
Co-channel Rejection	>=9dBc
Transmitter	
Max. Output Power (GSM)	+31dBm +/-2dB
Max. Output Power (DCS1800)	+30dBm +/-2dB
Min. Output Power (GSM)	5dBm +/-5dB
Min. Output Power (DCS1800)	0dBm +/-5dB
H2 Level	<-30dBm
H3 Level	<-30dBm
Noise in 824 to 849MHz	< -67dBm
Noise in 1805 to 1880MHz (DCS1800)	< -71dBm
Phase Error at Peak Power	< 5 degrees rms
Frequency Error	+/-0.1ppm max.

3.9 General Interface Part

3.9.1 Relevant Function Requirements of SM5100B Module

- Support a buzzer
- Support a vibrator

3.9.2 Test Design in SM5100B TEST BOARD

Relevant function requirement of SM5100B module should be evaluated in TEST BOARD. Figure 12 shows Test design of general interface part.

Spreadtrum reserves the right to change or discontinue this product without notice.

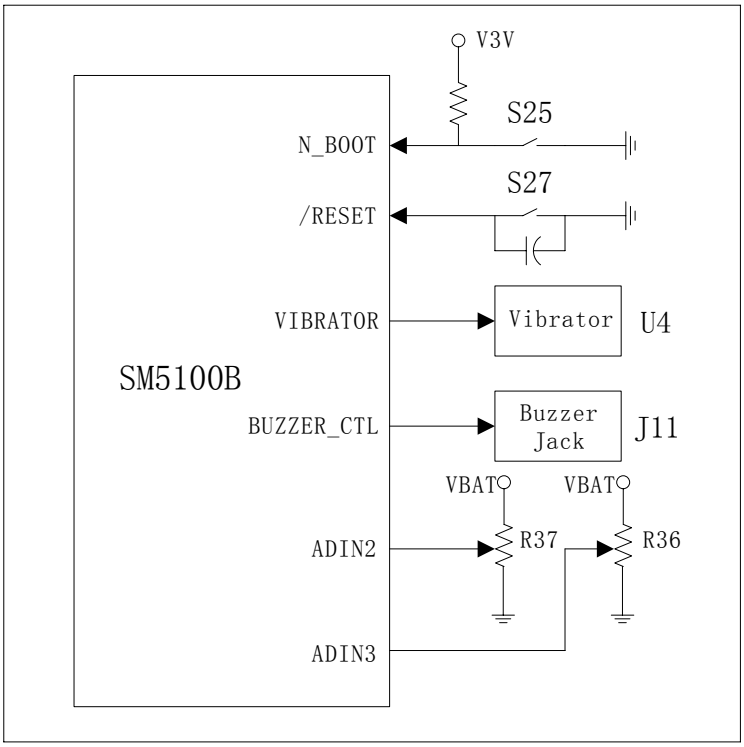

Figure 12: Test Design of General Interface Part

SM5100B module has some special function pins which may be evaluated in TEST BOARD.

Boot mode input. S25 is a switch which decides boot mode: download mode or normal-work mode.

Asynchronous reset input. S27 is a pushbutton which is used to produce reset signal. SM5100B module should be reset when pressing this button. The POR circuit output is held low at initial power-up. An internal capacitor can provide a 100us delay from release pushbutton to POR circuit start. If an external capacitor is connected to /RESET pin, the delay should be

$$T_{delay} = 1ms \times C_{extcap} / 100pF$$

200pF Capacitor is recommended. It means 2ms's delay.

Vibrator control output. Component U4 is a vibrator which is used to evaluate vibrator control function of SM5100B module.

Buzzer control output. J11 is a jack which is used to evaluate buzzer control function of SM5100B module through connecting to a buzzer.

ADC input. ADIN2 and ADIN3 both are ADC input channels. They may be evaluated through voltage divider R37 and R36.

3.10 System Function Part

3.10.1 Relevant Function Requirements of SM5100B TEST BOARD

- Support both 60 or 100 pin-out connectors to evaluate relevant SM5100B module
- Support test point to special signals
- Support logic analyzer test connector
- Support external keyboard connector
- Support SMS (text and PDU, MT/MO and cell broadcast
- Support GPRS Mobile station Class B and C, GPRS feature shall compliant with ETSI GSM Phase 2/2+ standard

Spreadtrum reserves the right to change or discontinue this product without notice.

3.10.2 Test Design in SM5100B TEST BOARD

Design figure for system function part is abbreviatory.

TEST BOARD supplies two connectors since SM5100B module has two types. J6 is 100-pin connector to evaluate 100-pin module and J8 is 60-pin connector to evaluate 60-pin module.

TEST BOARD supplies two connectors: CN1 and CN2, in order that logic analyzer may test special signals expediently. In addition, many test points are supplies to test special signals too.

TEST BOARD supplies connector U2 to permit using of external keyboard.

SMS may be evaluated through relevant menu on LCD.

Operation procedure of GPRS Test please refers to <GPRS Modem User Guide>.

3.10.3 Pin Definition of Relevant Connector

Connector	Connector Name	Pin No.	Pin Name
CN1	Logic test port 1	1	NC
		2	NC
		3	CLCD_RD
		4	RTCCLK
		5	ARM_CS3
		6	/CS2
		7	CLCD_A0
		8	A21
		9	CLCD_RST
		10	A20
		11	LCD_SCLK
		12	A19
		13	LCD_SIO
		14	NC
		15	SPI_LCD_CS
		16	NC
		17	LCD_RESET
		18	NC
		19	LCD_RS
		20	GND
CN2	Logic test port 2	1	NC
		2	NC
		3	CLCD_WR
		4	D15
		5	D14
		6	D13
		7	D12
		8	D11
		9	D10
		10	D9
		11	D8
		12	D7
		13	D6
		14	D5

Spreadtrum reserves the right to change or discontinue this product without notice.

		15	D4
		16	D3
		17	D2
		18	D1
		19	D0
		20	GND
U2	External keyboard interface	1	VBAT
		2	KEY_DRIVER0
		3	BACKLIGHT
		4	KEY_DRIVER1
		5	POWER_ON
		6	KEY_DRIVER2
		7	KEY_SENSE0
		8	KEY_DRIVER3
		9	KEY_SENSE1
		10	KEY_DRIVER4
		11	KEY_SENSE2
		12	KEY_DRIVER5
		13	KEY_SENSE3
		14	GND
TP	Test point for special pins	D1	MICN1
		D2	MICP1
		D3	EPN1
		D4	EPP1
		D5	VBAT
		D6	SSDX
		D7	SSDR
		D8	AUXMICN
		D9	AUXMICP
		D10	AUXSPKN
		D11	AUXSPKP
		D13	BATT_ID
		D14	RXD0#
		D15	TXD0#
		D16	RXD1#
		D17	TXD1#
		D18	TDO
		D19	TCK
		D20	SSCLK
		D21	TRST
		D22	SCK
		D23	SDA
		D26	ADC3
		D27	ADC2
		D28	/CS2
		D32~D53	GND

Spreadtrum reserves the right to change or discontinue this product without notice.

4 Test Setup

The generic test setup is shown in the following diagram.

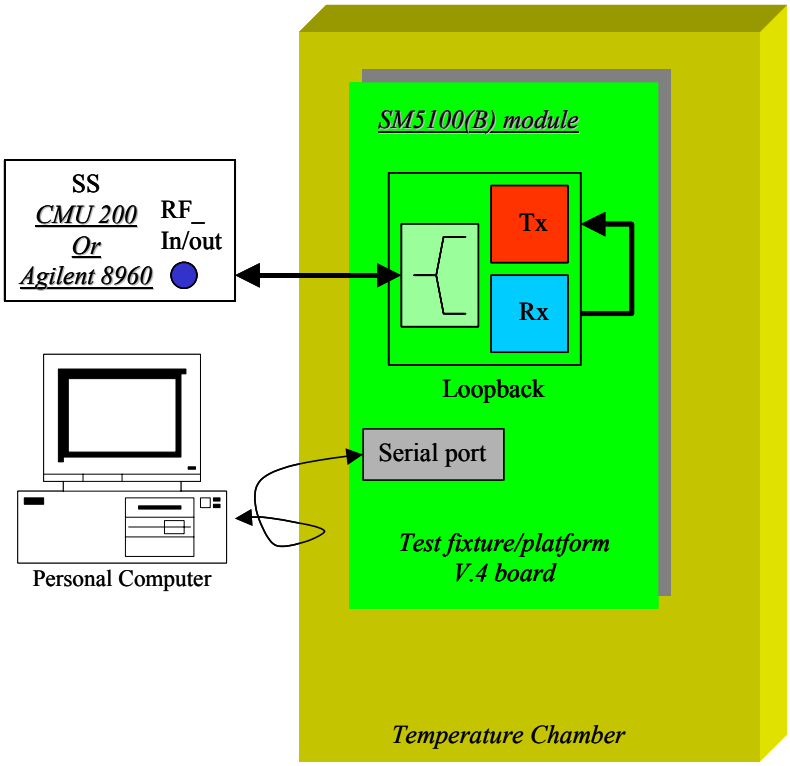

Figure 13: Test Setup Diagram

Test equipment consists of:

- GSM/GPRS Mobile System Tester, e.g.,
  - ✓ Agilent 8960
  - ✓ Hewlett-Packard HP8922
  - ✓ Rohde & Schwarz CMU 200,
  - ✓ Rohde & Schwarz CMD 55
  - ✓ Rohde & Schwarz CRTC02/CRTP02.
- Oscillograph (>200MHz)
- Logic analyzer
- Universal meter
- General Power Supply, 5V/3A.
- Personal Computer or laptop computer.
- Test fixtures.
- Temperature chamber.
- Misc. RF cable and peripheral DB-9 cables.

Spreadtrum reserves the right to change or discontinue this product without notice.

5 Installation&Operation Procedure

5.1 Installation Procedure

A simplified installation procedure is supplied in order to allow user to install the TEST BOARD quickly and correctly. The following steps describe the procedure to install the TEST BOARD.

When setting up the following part, please first switch off the 5V power supply.

(1) Installing the phone module. Insert the phone module into the TEST BOARD connector's socket J6 (for 100-pin module) or J8 (for 60-pin module). Let 4 pins of shielding can soldered in board. Insure that you have a good connection.

(2) Installing the SIM card. Lift up the bracket of the SIM card socket J5, insert SIM card into the socket and lower the bracket back in position.

(3) Installing the ARM JTAG debug tools. Insert 20-pin ribbon cable into the ARM JTAG port J2. This function is optional. You may not need to use the JTAG. (Notice the pin position and the orientation)

(4) Installing the RS-232 serial port cable. CN3 (UART0) is for software downloading, debugging. CN4 (UART1) is for communication. You may select one serial port for your purpose.

(5) Installing the logical analyser connectors. The TEST BOARD provides all digital signals from phone module to be monitored by logical analyser. You may use CN1, CN2 box headers connected with logical analyser for this purpose.

5.2 Operation Procedure

Once having set up the boards, please follow the operating procedure in the below.

(1)Connect external DC power supply (5V~10V) to J9 (for adaptor) or J10 (for DC power). Remember you have to push the connector from the DC power supply firmly to the end with connector, insuring that you have a good connection. Make sure the power LED is on.

(2) Click the power on button S24.

(3) The phone module should work properly. If you have plug handset in RJ22 connector, you can make phone call.

When operating the TEST BOARD board, the following is important part.

(1) The TEST BOARD board provides system reset function mainly for phone module. If you want to reset the phone module you may push the button S27. Then the phone module will fetch code again and system will go in initialisation state, and then go into working state.

(2) All digital signals from phone module are connected to CN1 and CN2, which can be monitored by logical analyser. Signals list see chapter 3.10.3.

(3) There is a switch S25 (NBOOT) on board that is used for setting the module running mode. Here is the function description:

Switch on left during reset:	Download mode.
Switch on right during reset:	Normal-working mode.

Spreadtrum reserves the right to change or discontinue this product without notice.

In the Download mode, the module will run internal BOOT code and communicate with the host PC via the serial port for downloading ARM software into Flash memory or SRAM. The detailed procedure is as follow:

Download Flash-burning driver to SRAM.
Run this Flash burning driver software which receives actual ARM code and burns into Flash.
Verify the software.

Since Flash driver software is downloaded into the SRAM, the driver software can be modified later if the Flash module is changed.

In the normal working mode, the module runs the normal phone call software.

5.3 Download Software Procedure

DLoader, which is a software tool provided by Spreadtrum, is used to download handset software into handset modules via UART. It can download multiple modules at the same time to provide a high efficiency. With a simple and friendly user interface, DLoader can automatically detect the UART resources and start the download process

The following parts describe the detailed usage of DLoader.

5.3.1 Graphic User Interface

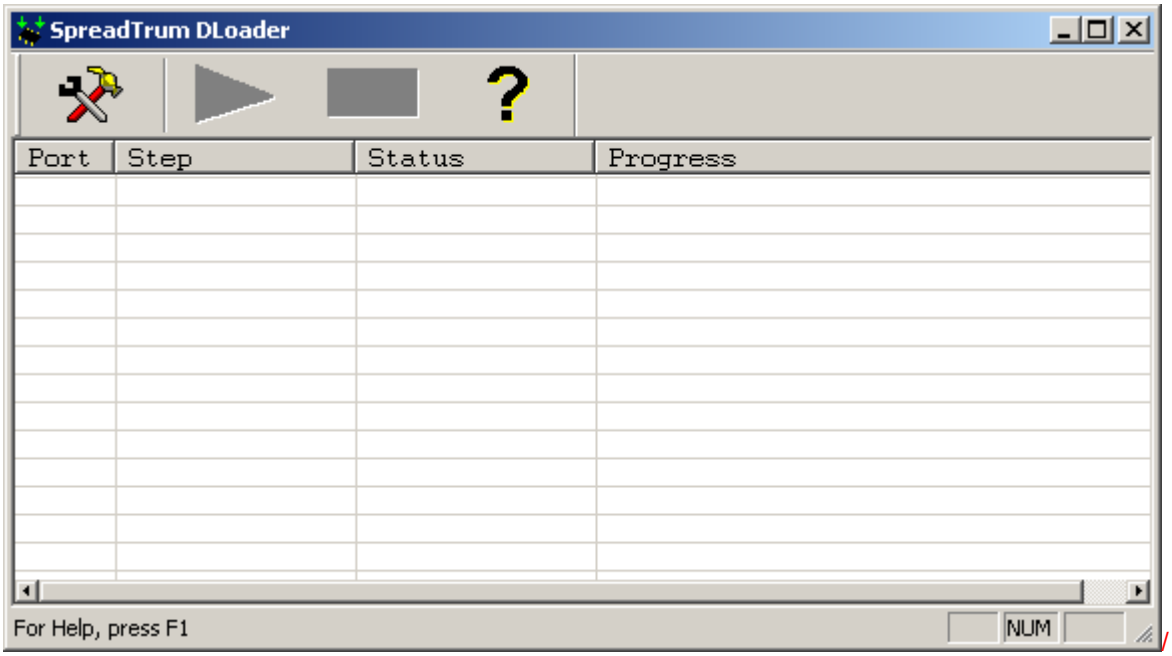

5.3.2 Toolbar

(1) Setting

Pressing this button will open a dialog to set the download parameters. These parameters must be set when you run DLoader for the first time, and these parameters will be stored automatically. Next time when you run DLoader again, you don't need to re-set them if you want to use the settings of last time.

Spreadtrum reserves the right to change or discontinue this product without notice.

(see Setting Dialog)

(2) Start Downloading

Press this button to start the download process. Before downloading, DLoader will automatically detect the available UART resources first. Once DLoader finds a handset module has been connected, it will start to download the handset software into this module.

NOTE:

(a) If you're running DLoader for the first time, this button will be disabled before you set the download parameters correctly.

(b) If the handset module has been connected, but DLoader can not detect it, please ensure that this module has been switched to the BOOT mode first. (Handset module can only be downloaded on BOOT mode.) Reset it and switch to the BOOT mode.)

(3) Start Downloading

Press this button to stop the download process.

NOTE: This button is only available during the downloading period.

(4) About

Press this button to display the version and copyright information of DLoader.

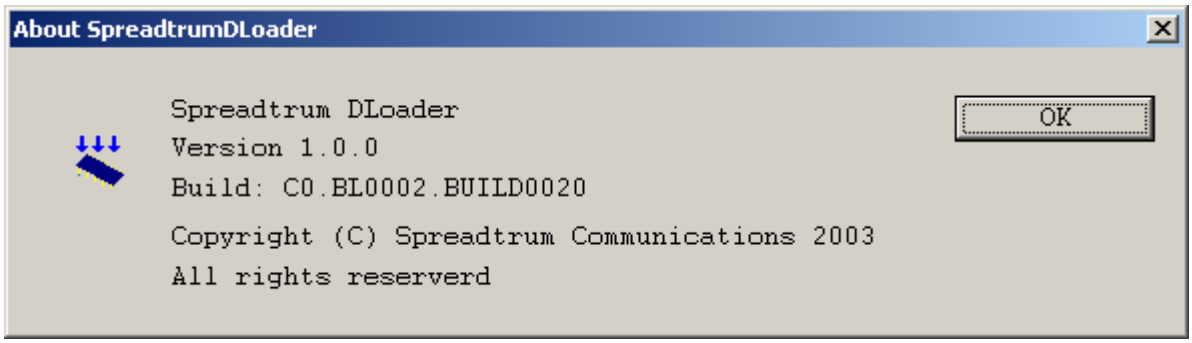

5.3.3 Status Window

This window will display the available UART resources and download status during the downloading period.

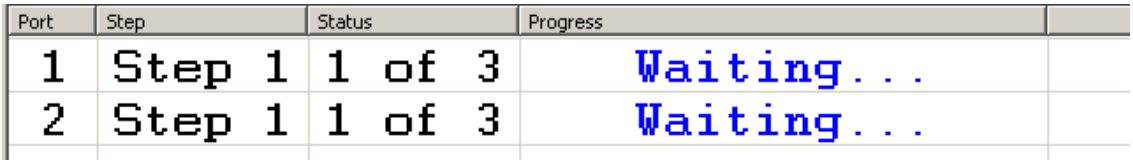

NOTE: about the progress indicator: (see the following pictures)

(1) "Waiting…" means that no handset module is connected with this UART.

(2) Green Color means that the download process has finished successfully.

(3) Red Color means that some error occurs during the download process.

Spreadtrum reserves the right to change or discontinue this product without notice.

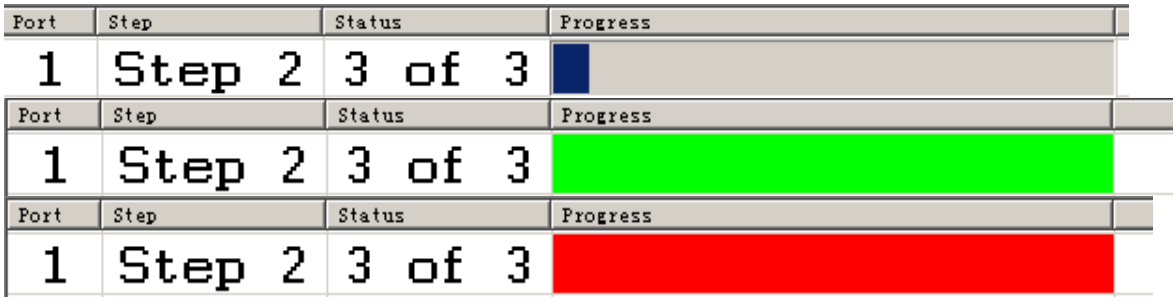

5.3.4 Setting Dialog

This dialog is used to configure the download parameters.

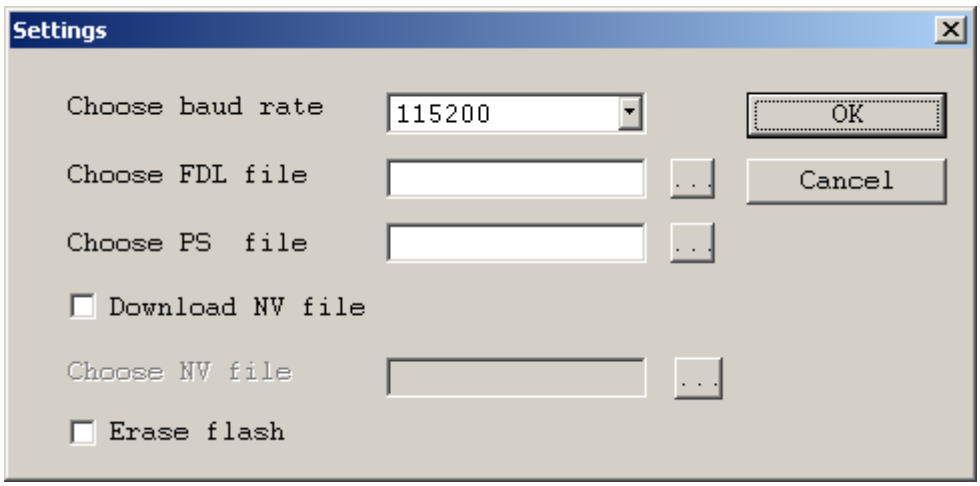

NOTE:
(a) These parameters must be set before downloading for the first time.
(b) This function will be disabled while downloading.

(1) Setting the UART Baudrate

Available baudrate values are 57600,115200, 230400, 460800. Please choose a correct value according to your UART equipment. The default value is 115200.

(2) Choosing the FDL File

This file is shipped with DLoader together, generally named as fdl_***.bin. Press the right button "…" to select this file, or input in the edit box directly.

(3) Choosing the PS File

This file is also shipped with DLoader together. The choosing method is same as the above.

(4) Choosing the NV File

Spreadtrum reserves the right to change or discontinue this product without notice.

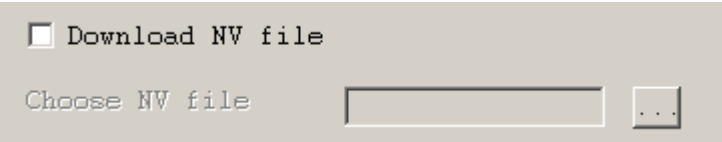

This file is also shipped with Dloader together. It is optional, you can choose downloading it or not in different situations. If you want to download NV file, click the check button in the left of “Download NV file”, then the editbox and browse button labeled “…” will be enable. Choose the NV file as the above. If you don’t want to download NV file, just clear the check button.

(5) Erasing the Flash

Select this option to erase the flash contents inside handset module. DLoader will not erase it by default.

Spreadtrum reserves the right to change or discontinue this product without notice.

Reference Documents

[1] < SM5100B Module Production Requirement Specifications >

[2] < SM5100B Test System Requirement Specifications >

[3] < DLoader User Manual >

[4] < AT Command User Manual >

[5] < GPRS Modem User Guide >

Spreadtrum reserves the right to change or discontinue this product without notice.

Appendix A: Pin Arrangement

Table 4 shows pin arrangement of SM5100B module based on 100-pin sequence.

Table 4: Pin Arrangement of SM5100B Module Based on 100-Pin Sequence

Pin No.	Pin Name	1st Function			2nd Function		
		Name	Type	Description	Name	Type	Description
1	NC						
2	CLK32K768	CLK32K768	O	32.78kHZ Clock Out			
3	GND	GND	G	Digital Ground			
4	GND	GND	G	Digital Ground			
5	SCL/GPIO	SCL	I/O	2-Wire Serial Clock	GPIO	I/O	GPIO
6	SDA/GPIO	SDA	I/O	2-Wire Serial Data	GPIO	I/O	GPIO
7	IrDA-EN	IrDA-EN	O	IrDA Enable	GPIO	I/O	GPIO
8	/CS2	/CS2	O	ARM external CS 2	GPIO	I/O	GPIO
9	NC						
10	A18	A18	O	ARM external address	LCD_CD (A0)	O	LCD A0
11	A19	A19	O	ARM external address			
12	A20	A20	O	ARM external address			
13	A21	A21	O	ARM external address			
14	VIBRATOR /GPIO(O)	GPIO(O)	O	VIBRATOR			
15	U0CTSN0/GPIO	U0CTSN0	I	Clear to Send	GPIO	I/O	GPIO
16	HEADSET-DETECT/GPIO	GPIO	I/O	GPIO			
17	ADIN3	ADIN3	AI	ADC Input 3			
18	ADIN2	ADIN2	AI	ADC Input 2			
19	GND	GND	G	Digital Ground			
20	HANDFREE/GPIO	GPIO	I/O	GPIO			
21	VBAT	VBAT	V	Battery Voltage			
22	VCHG	VCHG	V	Charge Voltage Supply			
23	VBAT	VBAT	V	Battery Voltage			
24	VCHG	VCHG	V	Charge Voltage Supply			
25	VBAT	VBAT	V	Battery Voltage			
26	Ni-MH BATTERY-ADC	NC		For Mobile, this PIN is NC. It has been used in Module	Ni-MH Vdet	AI	Detect Volt of NiMH
27	VBAT	VBAT	V	Battery Voltage			
28	VBAT	VBAT	V	Battery Voltage			

Spreadtrum reserves the right to change or discontinue this product without notice.

29	GND	GND	G	Digital Ground			
30	SIMPE	SIMPE	O	SIM Power Enable			
31	GND	GND	G	Digital Ground			
32	MICN	MICN	AI	Microphone Differential Negative Input			
33	GND	GND	G	Digital Ground			
34	MICP	MICP	AI	Microphone Differential Positive Input			
35	GND	GND	G	Digital Ground			
36	EARN	EARN	AO	Earphone Differential Negative Output			
37	GND	GND	G	Digital Ground			
38	EARP	EARP	AO	Earphone Differential Positive Output			
39	TX0	U0TXD	O	Transmit Data			
40	RX0	U0RXD	I	Receive Data			
41	SIMRST	SIMRST	O	SIM Reset			
42	U0RTSN/GPIO	U0RTSN	O	Request to Send	GPIO	I/O	GPIO
43	KBC3	KBC3	O	Keypad Out			
44	KBC0	KBC0	O	Keypad Out			
45	KBC4	KBC4	O	Keypad Out			
46	KBC2	KBC2	O	Keypad Out			
47	SIMCLK	SIMCLK	O	SIM Clock			
48	KBC1	KBC1	O	Keypad Out			
49	SIMDATA	SIMDATA	I/O	SIM Serial Data			
50	KBC5	KBC5	O	Keypad Out			
51	KBR2	KBR2	I	Keypad Input			
52	KBR1	KBR1	I	Keypad Input			
53	LCD-DATA-SPI	LCD-DATA	O	LCD_DATA_SPI	NBOOT	I	BOOT
54	/RESET	/RESET	I	Asynchronous reset, active low			
55	FLIP ON/GPIO	GPIO	I/O	FLIP ON/GPIO			
56	KBR0	KBR0	I	Keypad Input			
57	LED-B/GPIO	LED	I/O	Backlight control 2(LCD1)/GPIO			
58	LCD-CLK-SPI	LCD-CLK	O	LCD_CLK_SPI	GPIO	I/O	GPIO
59	LCD-RST-SPI	LCD-RST	O	LCD-RST-SPI	GPIO	I/O	GPIO
60	KBR3	KBR3	I	Keypad Input			
61	LCD-A0-SPI	LCD-A0	O	LCD_CD_SPI	GPIO	I/O	GPIO
62	AUXMICP	AUXMICP	AI	Auxiliary Microphone Differential Positive Input			
63	RX1	RX1	I	Receive Data			

Spreadtrum reserves the right to change or discontinue this product without notice.

64	AUXSPP	AUXSPP	AO	Auxiliary Speaker Differential Positive Output			
65	LED-C/GPIO	LED	I/O	Backlight control 3(LCD2)/GPIO			
66	TX1	TX1	O	Transmit Data			
67	V3V	V3V	V	V3V POWER SUPPLY 140mA			
68	VBACKUP	VBACKUP	V	RTCVDD 3.0V			
69	LED-A/GPIO	LED	I/O	Backlight control 1(KeyPad)/GPIO			
70	AUXMICN	AUXMICN	AI	Auxiliary Microphone Differential Negative Input			
71	AGND	AGND	AG	Analog Ground			
72	HEADSET-BUTT-IN/GPIO	GPIO	I/O	HEADSET-BUTT-IN/GPIO			
73	/CS3	/CS3	O	ARM external CS 3	GPIO	I/O	GPIO
74	LCD-CS-SPI	LCD-CS	O	LCD-CS-SPI	GPIO	I/O	GPIO
75	LCD_/RESET	LCD_ /RESET	O	LCD_/RESET	GPIO	I/O	GPIO
76	U0DTRN/GPIO	U0DTRN	O	Data Terminal Ready	GPIO	I/O	GPIO
77	U0DSRN/GPIO	U0DSRN	I	Data Set Ready	GPIO	I/O	GPIO
78	AUXSPN	AUXSPN	AO	Auxiliary Speaker Differential Negative Output			
79	POWER-ON	POWER-ON	I	POWER Button Interrupt	GPIO	I/O	GPIO
80	V3V	V3V	V	V3V POWER SUPPLY 140mA			
81	BUZZER_CTL	BUZZER _CTL	O	PWM Output(When used PWM,15,76,77,42P in only used as UART hardware flow control)	GPIO	I/O	GPIO
82	NC						
83	/WR	/WR	O	ARM external write enable, active low			
84	/RD	/RD	O	ARM external output enable, active low			
85	D0	D0	O	ARM external data			
86	D1	D1	O	ARM external data			
87	D2	D2	O	ARM external data			
88	D3	D3	O	ARM external data			
89	D4	D4	O	ARM external data			
90	D5	D5	O	ARM external data			
91	D6	D6	O	ARM external data			
92	D7	D7	O	ARM external data			

Spreadtrum reserves the right to change or discontinue this product without notice.

93	D8	D8	O	ARM external data			
94	D9	D9	O	ARM external data			
95	D10	D10	O	ARM external data			
96	D11	D11	O	ARM external data			
97	D12	D12	O	ARM external data			
98	D13	D13	O	ARM external data			
99	D14	D14	O	ARM external data			
100	D15	D15	O	ARM external data			

SM5100B module also supports 60-pin connector. Relative to 100-pin connector case, some functions are not supported in 60-pin connector case, such as parallel bus interface, buzzer control, two ADC inputs, ARM external CS2, 32.768k clock output and I2C bus, etc.

Table 5 shows pin arrangement of SM5100B module based on 60-pin sequence.

Table 5: Pin Arrangement of SM5100B Module Based on 60-Pin Sequence

Pin No.	Pin Name	1st Function			2nd Function		
		Name	Type	Description	Name	Type	Description
1	VBAT	VBAT	V	Battery Voltage			
2	VCHG	VCHG	V	Charge Voltage Supply			
3	VBAT	VBAT	V	Battery Voltage			
4	VCHG	VCHG	V	Charge Voltage Supply			
5	VBAT	VBAT	V	Battery Voltage			
6	Ni-MH BATTERY-ADC	NC		For Mobile, this PIN is NC. It has been used in Module	Ni-MH Vdet	AI	Detect Volt of NiMH
7	VBAT	VBAT	V	Battery Voltage			
8	VBAT	VBAT	V	Battery Voltage			
9	GND	GND	G	Digital Ground			
10	SIMPE	SIMPE	O	SIM Power Enable			
11	GND	GND	G	Digital Ground			
12	MICN	MICN	AI	Microphone Differential Negative Input			
13	GND	GND	G	Digital Ground			
14	MICP	MICP	AI	Microphone Differential Positive Input			
15	GND	GND	G	Digital Ground			
16	EARN	EARN	AO	Earphone Differential Negative Output			
17	GND	GND	G	Digital Ground			
18	EARP	EARP	AO	Earphone Differential Positive Output			
19	TX0	U0TXD	O	Transmit Data			

Spreadtrum reserves the right to change or discontinue this product without notice.

20	RX0	U0RXD	I	Receive Data			
21	SIMRST	SIMRST	O	SIM Reset			
22	U0RTSN/GPIO	U0RTSN	O	Request to Send	GPIO	I/O	GPIO
23	KBC3	KBC3	O	Keypad Out			
24	KBC0	KBC0	O	Keypad Out			
25	KBC4	KBC4	O	Keypad Out			
26	KBC2	KBC2	O	Keypad Out			
27	SIMCLK	SIMCLK	O	SIM Clock			
28	KBC1	KBC1	O	Keypad Out			
29	SIMDATA	SIMDATA	I/O	SIM Serial Data			
30	KBC5	KBC5	O	Keypad Out			
31	KBR2	KBR2	I	Keypad Input			
32	KBR1	KBR1	I	Keypad Input			
33	LCD-DATA-SPI	LCD-DATA	O	LCD_DATA_SPI	NBOOT	I	BOOT
34	/RESET	/RESET	I	Asynchronous reset, active low			
35	FLIP ON/GPIO	GPIO	I/O	FLIP ON/GPIO			
36	KBR0	KBR0	I	Keypad Input			
37	LED-B/GPIO	LED	I/O	Backlight control 2(LCD1)/GPIO			
38	LCD-CLK-SPI	LCD-CLK	O	LCD_CLK_SPI	GPIO	I/O	GPIO
39	LCD-RST-SPI	LCD-RST	O	LCD-RST-SPI	GPIO	I/O	GPIO
40	KBR3	KBR3	I	Keypad Input			
41	LCD-A0-SPI	LCD-A0	O	LCD_CD_SPI	GPIO	I/O	GPIO
42	AUXMICP	AUXMICP	AI	Auxiliary Microphone Differential Positive Input			
43	RX1	RX1	I	Receive Data			
44	AUXSPP	AUXSPP	AO	Auxiliary Speaker Differential Positive Output			
45	LED-C/GPIO	LED	I/O	Backlight control 3(LCD2)/GPIO			
46	TX1	TX1	O	Transmit Data			
47	V3V	V3V	V	V3V POWER SUPPLY 140mA			
48	VBACKUP	VBACKUP	V	RTCVDD 3.0V			
49	LED-A/GPIO	LED	I/O	Backlight control 1(KeyPad)/GPIO			
50	AUXMICN	AUXMICN	AI	Auxiliary Microphone Differential Negative Input			
51	AGND	AGND	AG	Analog Ground			
52	HEADSET-BUTT-IN/GPIO	GPIO	I/O	HEADSET-BUTT-IN/GPIO			
53	/CS3	/CS3	O	ARM external CS 3	GPIO	I/O	GPIO

Spreadtrum reserves the right to change or discontinue this product without notice.

54	LCD-CS-SPI	LCD-CS	O	LCD-CS-SPI	GPIO	I/O	GPIO
55	LCD_/RESET	LCD_ /RESET	O	LCD_/RESET	GPIO	I/O	GPIO
56	U0DTRN/GPIO	U0DTRN	O	Data Terminal Ready	GPIO	I/O	GPIO
57	U0DSRN/GPIO	U0DSRN	I	Data Set Ready	GPIO	I/O	GPIO
58	AUXSPN	AUXSPN	AO	Auxiliary Speaker Differential Negative Output			
59	POWER-ON	POWER-ON	I	POWER Button Interrupt	GPIO	I/O	GPIO
60	V3V	V3V	V	V3V POWER SUPPLY 140mA			

APPENDIX B: SAFETY INFORMATION

Exposure to Radio Frequency energy

To assure optimal radio performance and to ensure that exposure to RF energy is within the guidelines of FCC report, the following operating procedures should be observed:

- Do not operate a transceiver when someone is within the distance noted below of the antenna (unity gain)
- For the frequency range of 824 – 849 MHz
  0.3m for 0.1- 2w of transmitter
- And for the frequency range 1850-1910MHz
  0.3m for 0.1 – 1w of transmitter

End of Document

Spreadtrum reserves the right to change or discontinue this product without notice.