Update History

		ver2.3	ver2.4	Ver2.5
1	SubType_SL0	01H(Default Controller) 1	1 (043) 0 (046)	
2		02H(S Controller) 0	0 (043) 1 (046)	
3				
4	FB13		FB0R	FB120R/100MHz
5	FB7		FB0R	FB120R/100MHz
6	FB9		FB0R	FB120R/100MHz
7	FB6		Short	FB120R/100MHz
8				
9				
10				

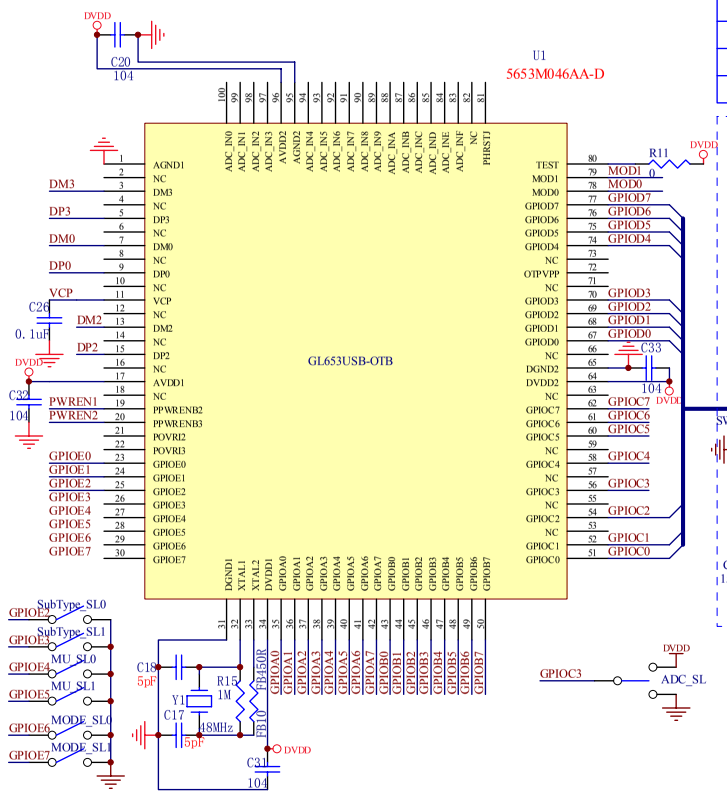

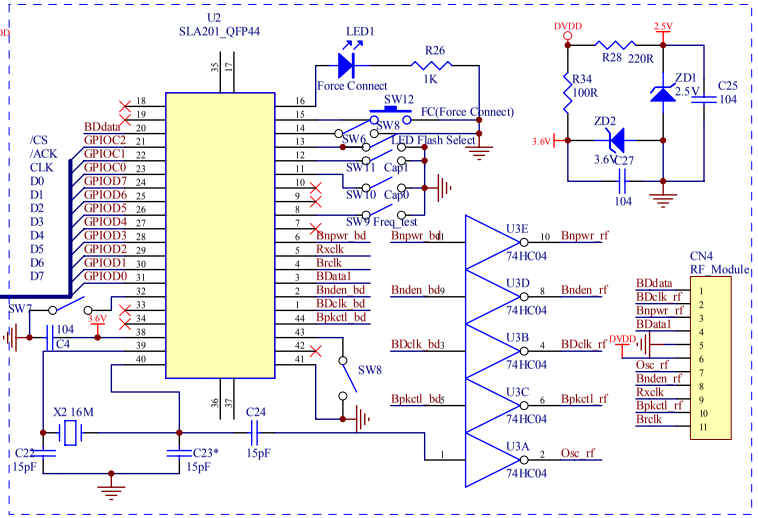

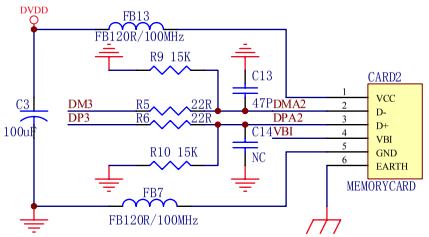

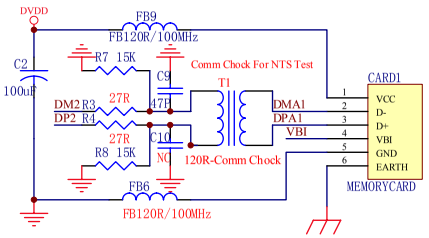

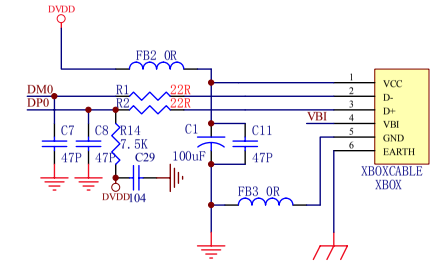

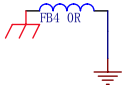

*When the product use 5653M046AA-D, SubType_SL1 must short to GND

** the device use RC scheme(Not AD Scheme), ADC_SL must short to GND

MODEL SELECT		
MODEL	MODE_SL1	MODE_SL0
PAD	1	1
MEMORY CARD SELECT		
	MU_SL1	MU_SL0
0 Memory Card	0	1
1 Memory Card	1	1
2 Memory Card	1	0
SUBTYPE SELECT		
SUBTYPE	SubType_SL0	
01H(Default Controller)	1 (043)	0 (046)
02H(S Controller)	0 (043)	1 (046)
ADC SELECT		
	ADC_SL=0	ADC_SL=1
AXIS RESOLUTION	8 BIT	10BIT

MODEL SELECT		
MODEL	MODE_SL1	MODE_SL0
WHEEL	0	0
MEMORY CARD SELECT		
	MU_SL1	MU_SL0
0 Memory Card	0	1
1 Memory Card	1	1
2 Memory Card	1	0
ADC SELECT		
	ADC_SL=0	ADC_SL=1
AXIS RESOLUTION	8 BIT	10BIT

MODEL SELECT		
MODEL	MODE_SL1	MODE_SL0
DancePad(8Key)	1	0
DancePad(9Key)	0	1
MEMORY CARD SELECT		
	MU_SL1	MU_SL0
0 Memory Card	0	1
1 Memory Card	1	1
2 Memory Card	1	0
ADC SELECT		
ADC_SL=0		

Title	UCOMM_RF_XBOX_PAD_HOST	
Size A3	Number	Revision Ver2.5C
Date: 17-Dec-2004		Sheet of
File: F:\backup\UCOMM_Product.DDB		Drawn By: Raymond

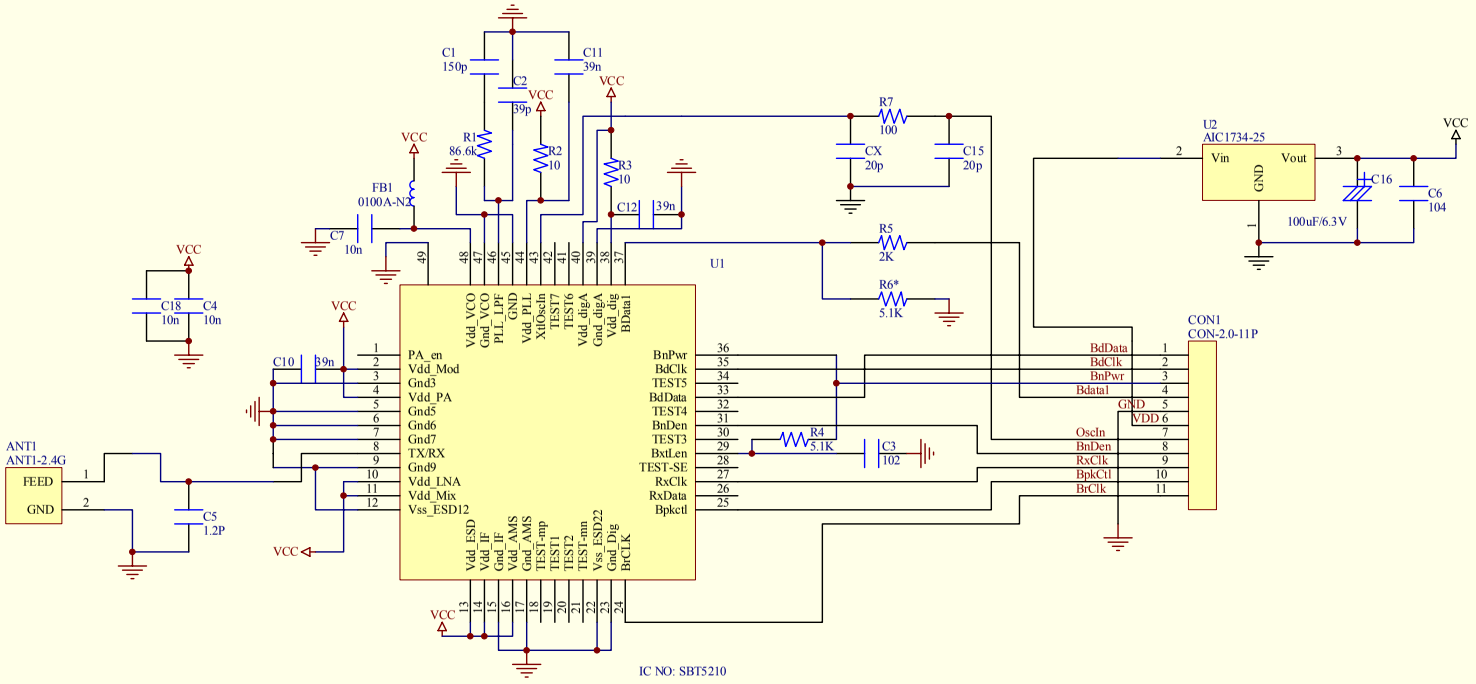

Title	RF_Module_Signia	
Size B	Number	Revision Ver8.2
Date: 22-Feb-2005	Sheet of	
File: D:\app\Design Explorer 99 SE\Examples\RFMODB34.DDB		