Compliance Test Report for FCC

Report Number		ESTF150412-004		
Applicant	Company name	Tellion, Inc.		
	Address	5th Fl, BONA Venture Town 1586-7 Seocho 3-Dong, Seocho-Gu, Seoul 137-719, KOREA		
	Telephone	82-2-3474-0308		
Product	Product name	IP-VDSL Modem		
	Model No.	EX-1101QL	Manufacturer	Tellion, Inc.
	Serial No.	NONE	Country of origin	KOREA
Test date	2004-12-03 ~ 2004-12-17		Date of issue	2004-12-17
Test location	ESTECH. Co., Ltd. 97-1 Hoiuk-Ri Majang-Myon, Icheon-city, KyungKi-Do, Korea			
Standard	FCC PART 15 2002 , ANSI C 63.4 2001			
Test item	■ Conducted Emission	☐ Class A ■ Class B	Test result	OK
	■ Radiated Emission	☐ Class A ■ Class B	Test result	OK
Measurement facility registration number		94696		
Tested by	Senior Engineer J.M. Yang		(Signature)	
Reviewed by	Director T.K. Lee		(Signature)	
Abbreviation	OK, Pass = Passed, Fail = Failed, N/A = not applicable			

* Note

- This is certified that the above mentioned producs have been tested for the sample provided by client
- No part of this document may be duplicated or reproduced by any means without the express written permission of the Estech Co., Ltd.

Contents

1. Laboratory Information 3

2. Description of EUT 4

3. Test Standards 5

4. Measurement condition 6

5. Measurement of radiated emission 8

5.1 Measurement equipment 8

5.2 Environmental conditions 8

5.3 Test data 9

6. Measurement of conducted emission 10

6.1 Measurement equipment 10

6.2 Environmental conditions 10

6.3 Test data 11

7. Photographs of test setup 12

8. Photographs of EUT 14

Appendix 1. Spectral diagram

Appendix 2. Phorographs of EUT in side PCB

Appendix 3. Block diagram of EUT

Appendix 4. Circuit Diagram

1. Laboratory Information

1.1 General

This EUT (Equipment Under Test) has been shown to be capable of compliance with the applicable technical standards and is tested in accordance with the measurement procedures as indicated in this report.
ESTECH attests to accuracy of test data. All measurement reported herein were performed by ESTECH Co., Ltd.
ESTECH assume full responsibility for the completeness of these measurements and vouch for the qualifications of all persons taking them.

1.2 Test Lab.

Corporation Name : ESTECH Co. Ltd

Head Office : 3 rd Fl., Chungdam Bldg., 119-1 Chungdam-dong Kangnam-gu , Seoul, Korea
(Safety & Telecom. Test Lab)

EMC Test Lab : 58-1 Osan-Ri, GaNam-Myon, YeoJoo-Gun, KyungKi-Do, Korea
97-1 Hoiuk-Ri Majang-Myon, Icheon-city, KyungKi-Do, Korea

1.3 Official Qualification(s)

FCC : Filed Laboratory at Federal Communications Commission

3. Test Standards

Test Standard : FCC PART 15 (2002)

This Standard sets out the regulations under which an intentional, unintentional, or incidental radiator may be operated without an individual license. It also contains the technical specifications, administrative requirements and other conditions relating to the marketing of Part 15 devices.

Test Method : ANSI C 63.4 (2001)

This standard sets forth uniform methods of measurement of radio-frequency (RF) signals and noise emitted from both unintentional and intentional emitters of RF energy in the frequency range 9 kHz to 40 GHz. Methods for the measurement of radiated and AC power-line conducted radio noise are covered and may be applied to any such equipment unless otherwise specified by individual equipment requirements. These methods cover measurement of certain decides that deliberately radiate energy, such as intentional emitters, but does not cover licensed transmitters. This standard is not intended for certification/approval of avionic equipment or for industrial, scientific, and medical (ISM) equipment These method apply to the measurement of individual units or systems comprised of multiple units

2. Description of EUT

2.1 Summary of Equipment Under Test

Product	: IP-VDSL Modem
Model Number	: EX-1101QL
Serial Number	: NONE
Manufacturer	: Tellion, Inc.
Country of origin	: KOREA
Rating	: Input : 100~240VAC, 50~60Hz, DC 5V/2A Electric power gauge : 5 Watt (Max)
Receipt Date	: 2004-10-05

2.2 General descriptions of EUT

IP-VDSL EX-1101QL is Modem providing very high speed Data Service and common Telephone Service to User through residential Telephone Line.
IP-VDSL EX-1101QL is Modem providing various Multimedia Service such as high seed Internet connection,
Internet Broad casting, Remote Diagnosis, Monitoring Conference, VoD etc..

USING OSC FREQ	25MHZ

4. Measurement Condition

4.1 EUT Operation.

* The EUT was in the following operation mode during all testing
* The operational conditions of the EUT was determined by the manufacturer according to the typical use of the EUT with respect to the expected hightest level of emission
* Using ping command between external Network, Transmission and Receiving test at between external Network

4.2 Configuration and Peripherals

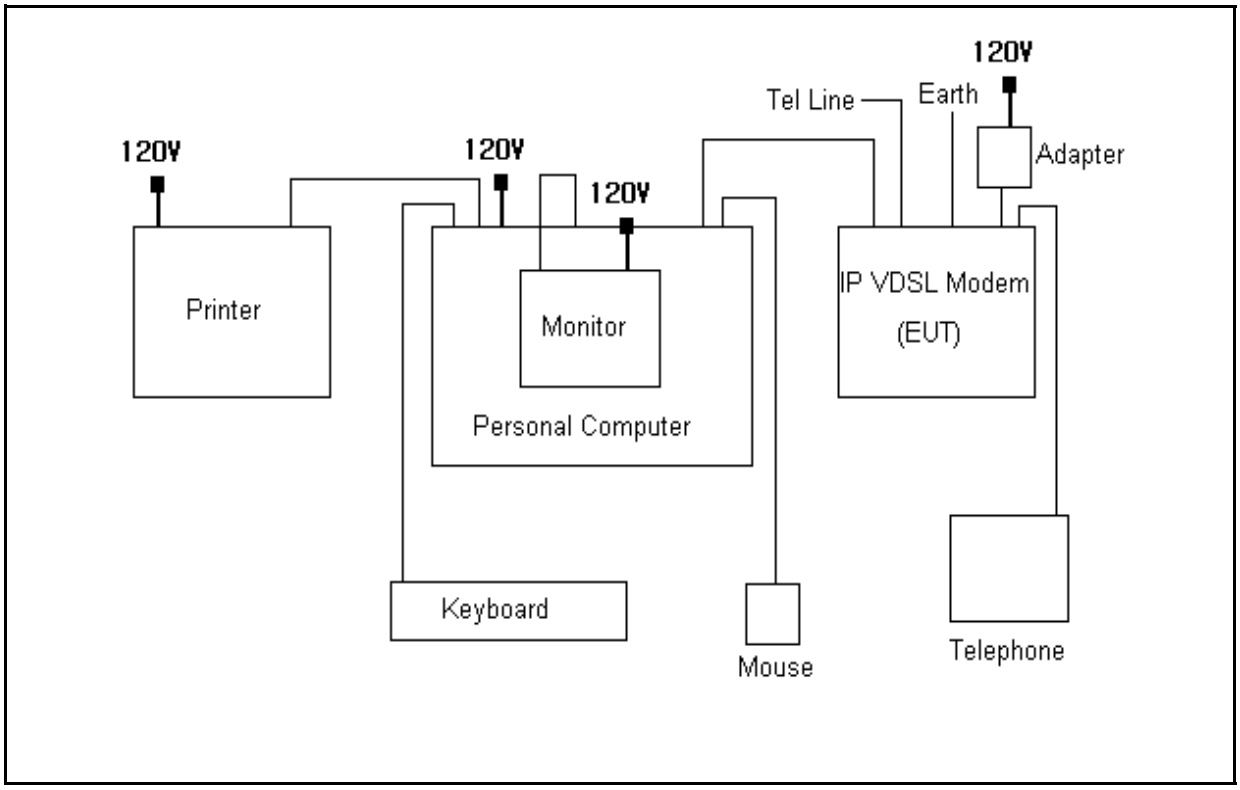

4.3 EUT and Support equipment

Equipment Name	Model Name	S/N	Manufacturer	Remark (FCC ID)
IP-VDSL Modem	EX-1101QL	NONE	Tellion, Inc.	
ADAPTER	VE10B-050	NONE	POWERTRON TECHNOLOGY CO., LTD.	
PERSONAL COMPUTER	Optiplex GX50	NONE	DELL	
KEYBOARD	SEM-DT35	32006557	Samsung Electronics Co., Ltd.	
MOUSE	M-S48a	HCA11804896	Logitech	
MONITOR	D8897	CN11104168	HP	
PRINTER	LQ-570H	B1021095782	SAMBO COMPUTER	

4.4 Cable Connecting

Start Equipment		End Equipment		Cable Standard		Remark
Name	I/O port	Name	I/O port	Length	Shielded	
IP-VDSL Modem	LAN	PERSONAL COMPUTER	LAN	2	N	
IP-VDSL Modem	PHONE	TELEPHONE	-	2	N	
IP-VDSL Modem	TEL-LINE	EXTERNAL NETWORK	-	25	N	
IP-VDSL Modem	EARTH	GROUND	-	1.5	N	
PERSONAL COMPUTER	VIDEO	MONITOR	VIDEO	2	Y	
PERSONAL COMPUTER	PS/2 MOUSE	MOUSE	PS/2 MOUSE	2	N	
PERSONAL COMPUTER	PS/2 KEYBOARD	KEYBORAD	PS/2 KEYBOARD	2	N	
PERSONAL COMPUTER	PARALLEL	PRINTER	PARALLEL	2	Y	

5. Measurement of radiated disturbance

Above 30 MHz Electric Field strength was measured in accordance with FCC Part 15 (2002) & ANSI C 63.4 (2001). The test setup was made according to FCC Part 15 (2002) & ANSI C 63.4 (2001) on an open test site, which allows a 10m distance measurement. The EUT was placed in the center of wooden turntable. The height of this table was 0.8m. The measurement was conducted with both horizontal and vertical antenna polarization. The turntable has fully rotated. For further description of the configuration refer to the picture of the test set-up.

5.1 Measurement equipments

Equipment Name	Type	Manufacturer	Serial No.	Next Calibration date
Receiver	ESVS10	Rohde & Schwarz	838562/002	2005.1.12
Spectrum Analyzer	R3261B	ADVANTEST	1720302	2005.2.12
Spectrum Analyzer	HP 8563E	HP	3623A05297	2005.2.12
LogBicon Antenna	VULB 9160	S/B	3142	2005.7.06
Horn Antenna	BBHA 9120 D	SCHWARZBECK	352	2006.4.06
Turn Table	2087	EMCO	2129	-
Antenna Mast	2070-01	EMCO	9702-203	-
ANT Mast Controller	2090	EMCO	1535	-
Turn Table Controller	2090	EMCO	1535	-

5.2 Environmental Condition

Test Place : Open site(3M)

Temperature (°C) : 12 ℃

Humidity (%) : 45%

5.3 Test data

Measurement Distance : 3 m

Frequency (MHz)	Reading (dBμV)	Position (V/H)	Height (m)	Correction Factor		Result Value		
				Ant Factor (dB)	Cable (dB)	Limit (dBμV/m)	Result (dBμV/m)	Margin (dBμV/m)
66.00	23.00	V	1.0	12.38	1.2	40.0	36.60	-3.40
125	21.20	H	2.4	12.48	1.8	43.5	35.47	-8.03
132.00	18.30	H	2.2	12.82	1.8	43.5	32.91	-10.59
143.29	24.80	H	2.0	13.71	2.0	43.5	40.49	-3.01
150.00	19.40	H	1.8	13.90	1.9	43.5	35.20	-8.30
200.00	24.30	H	1.6	10.38	2.1	43.5	36.78	-6.72
231.02	26.80	H	1.3	12.23	2.4	46.0	41.46	-4.54
250.00	27.50	H	1.0	11.92	2.3	46.0	41.72	-4.28
375.00	25.20	H	1.0	14.76	3.0	46.0	43.00	-3.01
500.00	20.80	H	1.0	17.06	3.6	46.0	41.46	-4.54
550.00	20.10	H	1.0	18.14	3.4	46.0	41.59	-4.41
600.00	18.00	V	1.0	19.16	4.0	46.0	41.16	-4.84
650.00	17.00	H	1.0	19.92	3.7	46.0	40.60	-5.41
693.00	18.40	H	1.0	20.45	3.6	46.0	42.48	-3.52
725.00	14.10	H	1.0	20.88	4.0	46.0	39.01	-6.99
825.00	14.40	H	1.0	22.11	4.4	46.0	40.91	-5.09
Remark	H : Horizontal, V : Vertical Measurement Mode:GROUND							

5.3 Test data

Measurement Distance : 3 m

Frequency (MHz)	Reading (dBμV)	Position (V/H)	Height (m)	Correction Factor		Result Value		
				Ant Factor (dB)	Cable (dB)	Limit (dBμV/m)	Result (dBμV/m)	Margin (dBμV/m)
45.50	17.80	V	1.0	12.77	1.0	40.0	31.58	-8.42
66.30	23.50	H	3.1	12.39	1.2	40.0	37.12	-2.88
108.80	20.70	H	2.1	11.03	1.8	43.5	33.48	-10.02
125.00	16.50	H	2.0	12.48	1.8	43.5	30.77	-12.73
143.31	24.20	V	1.9	13.71	2.0	43.5	39.90	-3.60
165.01	21.20	V	1.0	15.20	2.8	43.5	39.15	-4.35
200.00	25.40	H	1.6	10.38	2.1	43.5	37.88	-5.62
226.91	24.10	H	1.4	11.24	3.6	46.0	38.92	-7.08
250.00	28.70	H	1.2	11.92	2.3	46.0	42.92	-3.08
264.01	22.50	H	1.2	16.11	3.4	46.0	41.97	-4.03
330.01	19.10	H	1.2	13.87	2.8	46.0	35.79	-10.21
375.00	25.30	H	1.0	14.76	3.0	46.0	43.10	-2.90
432.07	19.70	H	1.0	16.12	2.9	46.0	38.72	-7.28
500.00	21.00	H	1.0	17.06	3.6	46.0	41.66	-4.34
550.00	21.20	V	1.0	18.14	3.4	46.0	42.69	-3.31
600.00	17.00	V	1.0	19.16	4.0	46.0	40.16	-5.84
825.00	15.40	H	1.0	22.11	4.4	46.0	41.91	-4.09
Remark	H : Horizontal, V : Vertical Measurement Mode:NOT GROUND							

6. Measurement of conducted disturbance

The continuous disturbance voltage of AC Mains in the frequency from 0.15 to 30 MHz was measured in accordance to FCC Part 15 (2002) & ANSI C 63.4 (2001) The test setup was made according to FCC Part 15 (2002) & ANSI C 63.4 (2001) in a shielded. The EUT was placed on a non-conductive table at least 80 above the ground plan. A grounded vertical reference plane was positioned in a distance of 40cm from the EUT. The distance from the EUT to other metal surfaces was at least 0.8m. The EUT was only earthen by its power cord through the line impedance stabilizing network. The power cord has been bundled to a length of 1.0m.. The test receiver with Quasi Peak detector complies with CISPR 16.

6.1 Measurement equipments

Equipment Name	Type	Manufacturer	Serial No.	Next Calibration date
LISN	ESH3-Z5	Rohde & Schwarz	838979/010	2005. 2. 12
LISN	NNLA8120A	Schwarzbeck	NONE	2005. 2. 12
TEST Receive	ESPI7	Rohde & Schwarz	100185	2005. 8. 20
Pulse Limiter	ESH3Z2	Rohde & Schwarz	NONE	2005. 6. 15

6.2 Environmental Condition

Test Place : Shield Room

Temperature (°C) : 21 ℃

Humidity (%) : 40 %

6.3 Test data

Frequency (MHz)	Correction Factor		Line (H/N)	Quasi-peak Value			Average Value		
	Lisn (dB)	Cable (dB)		Limit (dBμV)	Reading (dBμV)	Result (dBμV)	Limit (dBμV)	Reading (dBμV)	Result (dBμV)
0.176	0.07	0.0	H	64.67	36.13	36.22	54.67		
0.180	0.07	0.0	N	64.49	36.64	36.73	54.49		
0.346	0.07	0.1	H	59.06	29.49	39.05	49.06		
0.348	0.07	0.1	N	59.01	40.13	36.16	49.01		
0.356	0.07	0.1	H	58.82	26.10	40.05	48.82		
0.620	0.08	0.2	H	56.00	25.03	40.25	46.00		
0.716	0.08	0.2	H	56.00	34.57	41.23	46.00		
0.895	0.09	0.2	H	56.00	32.14	41.71	46.00		
1.049	0.09	0.2	N	56.00	33.93	40.23	46.00		
1.136	0.09	0.2	N	56.00	39.26	39.62	46.00		
1.530	0.10	0.3	H	56.00	45.04	36.66	46.00		
18.365	0.67	0.8	N	60.00	34.59	35.63	50.00		
Remark	H : Hot Line, N : Neutral Line Measurement Mode:GROUND								

6.3 Test data

Frequency (MHz)	Correction Factor		Line (H/N)	Quasi-peak Value			Average Value		
	Lisn (dB)	Cable (dB)		Limit (dBμV)	Reading (dBμV)	Result (dBμV)	Limit (dBμV)	Reading (dBμV)	Result (dBμV)
0.156	0.07	0.0	H	65.67	36.13	37.92	55.67		
0.366	0.07	0.1	H	58.59	36.64	40.75	48.59		
0.458	0.07	0.2	H	56.73	29.49	40.29	46.73		
0.628	0.08	0.2	H	56.00	40.13	40.63	46.00		
0.732	0.09	0.2	H	56.00	26.10	42.23	46.00		
0.894	0.09	0.2	N	56.00	45.04	41.50	46.00		
0.895	0.09	0.2	H	56.00	25.03	42.51	46.00		
1.374	0.10	0.2	H	56.00	34.57	37.18	46.00		
1.561	0.10	0.3	H	56.00	32.14	36.36	46.00		
18.243	0.67	0.8	H	60.00	33.93	41.47	50.00		
26.485	0.78	0.9	H	60.00	39.26	40.74	50.00		
Remark	H : Hot Line, N : Neutral Line Measurement Mode:NOT GROUND								

7. Photographs of test setup

7.1 Setup for Radiated Test : 30 ~ 1000 MHz(GROUND)

[Front]

[Rear]

7. Photographs of test setup

7.1 Setup for Radiated Test : 30 ~ 1000 MHz(NOT GROUND)

[Front]

[Rear]

7.2 Setup for Conducted Test : 0.15 ~ 30 MHz(GROUND)

[Front]

[Rear]

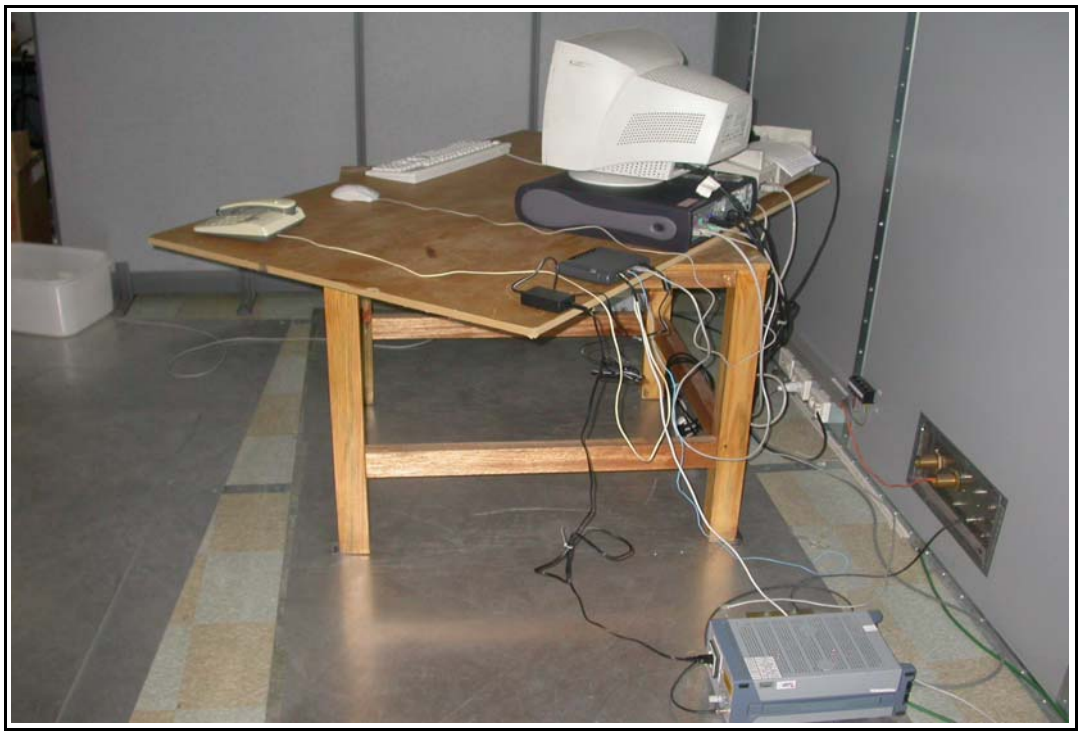

7.2 Setup for Conducted Test : 0.15 ~ 30 MHz(NOT GROUND)

[Front]

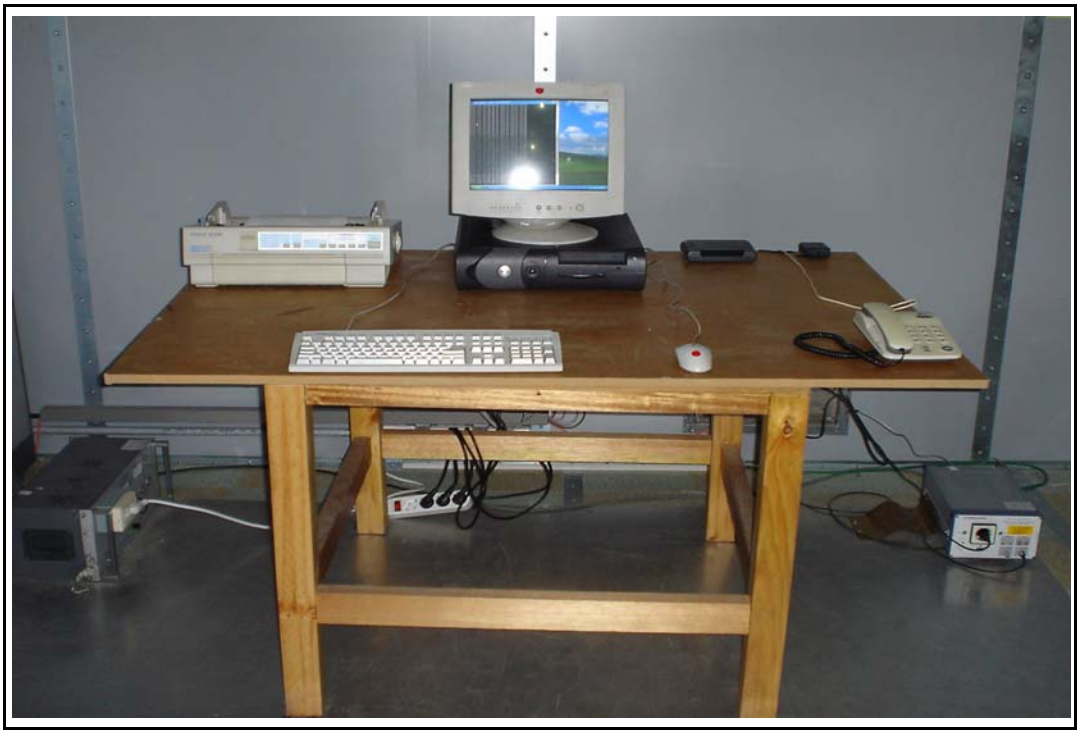

[Rear]

8. Photographs of EUT

[Front]

[Rear]

Appendix 1. Spectral diagram(GROUND)

*HOT

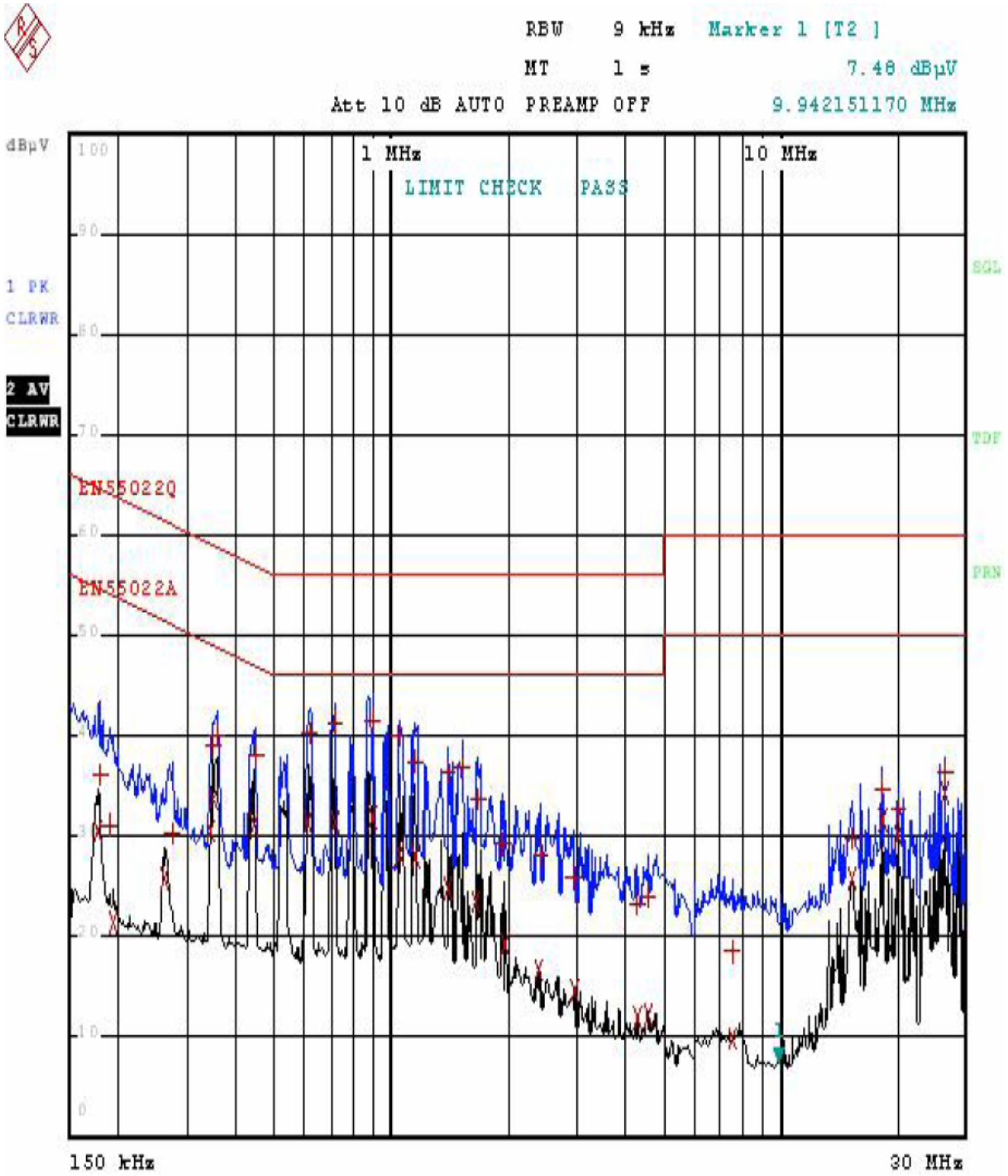

Comment: EX-1011QL HOT

Date: 6.DEC.2004 15:37:47

*NETRUL

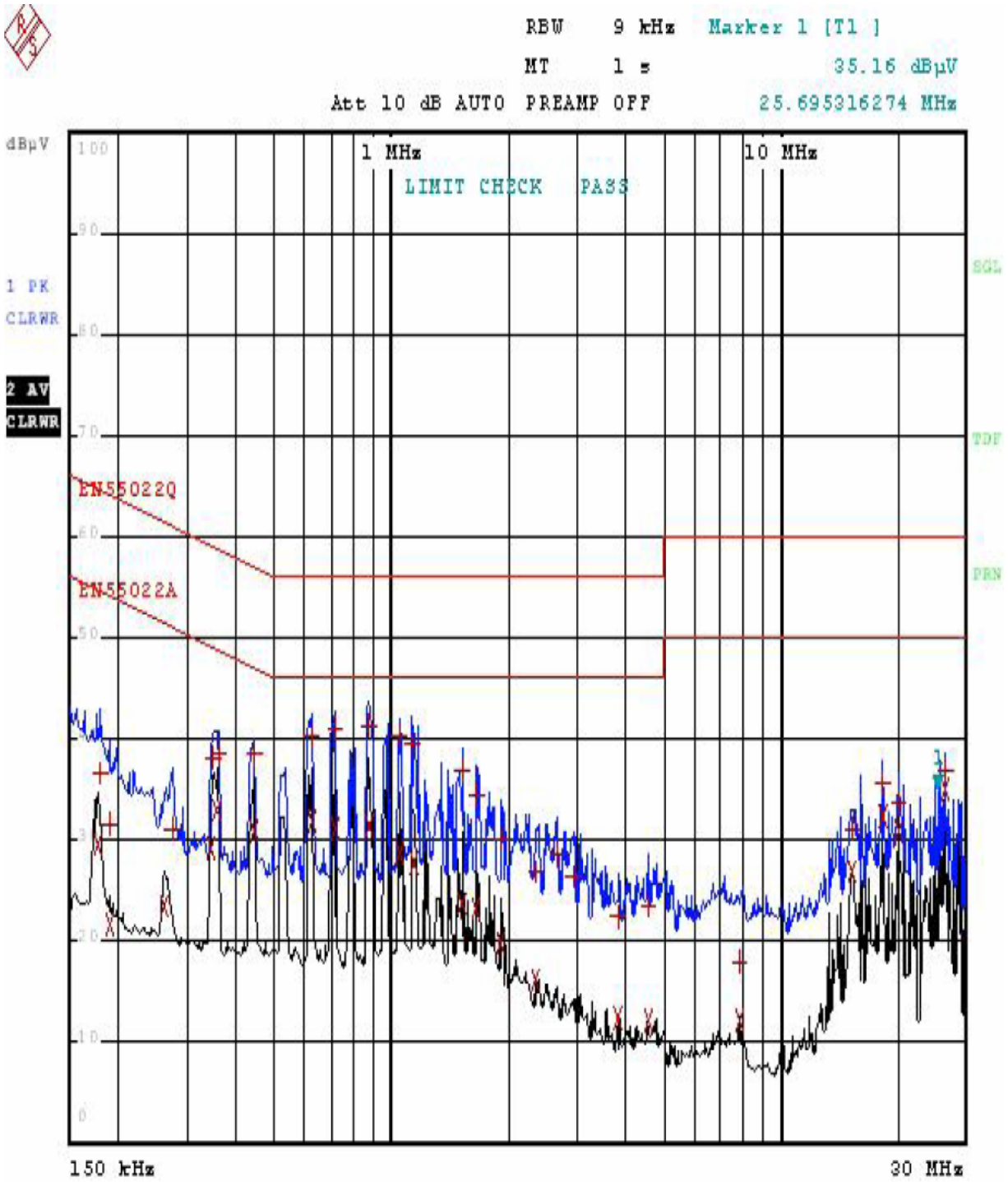

Comment: EX-1011QL NEUTRAL

Date: 6.DEC.2004 15:24:48

Appendix 1. Spectral diagram(NOT GROUND)

*HOT

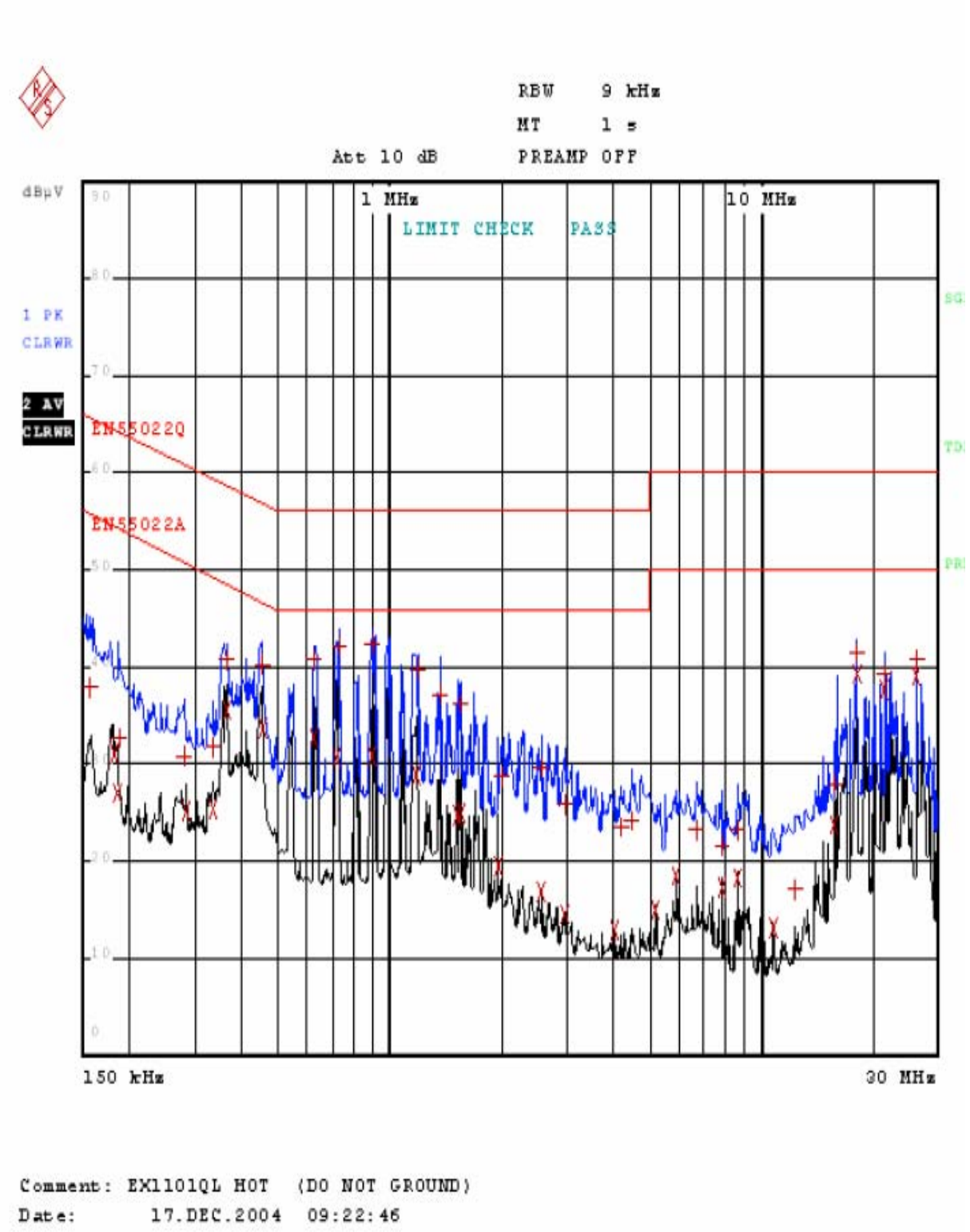

*NETRUL

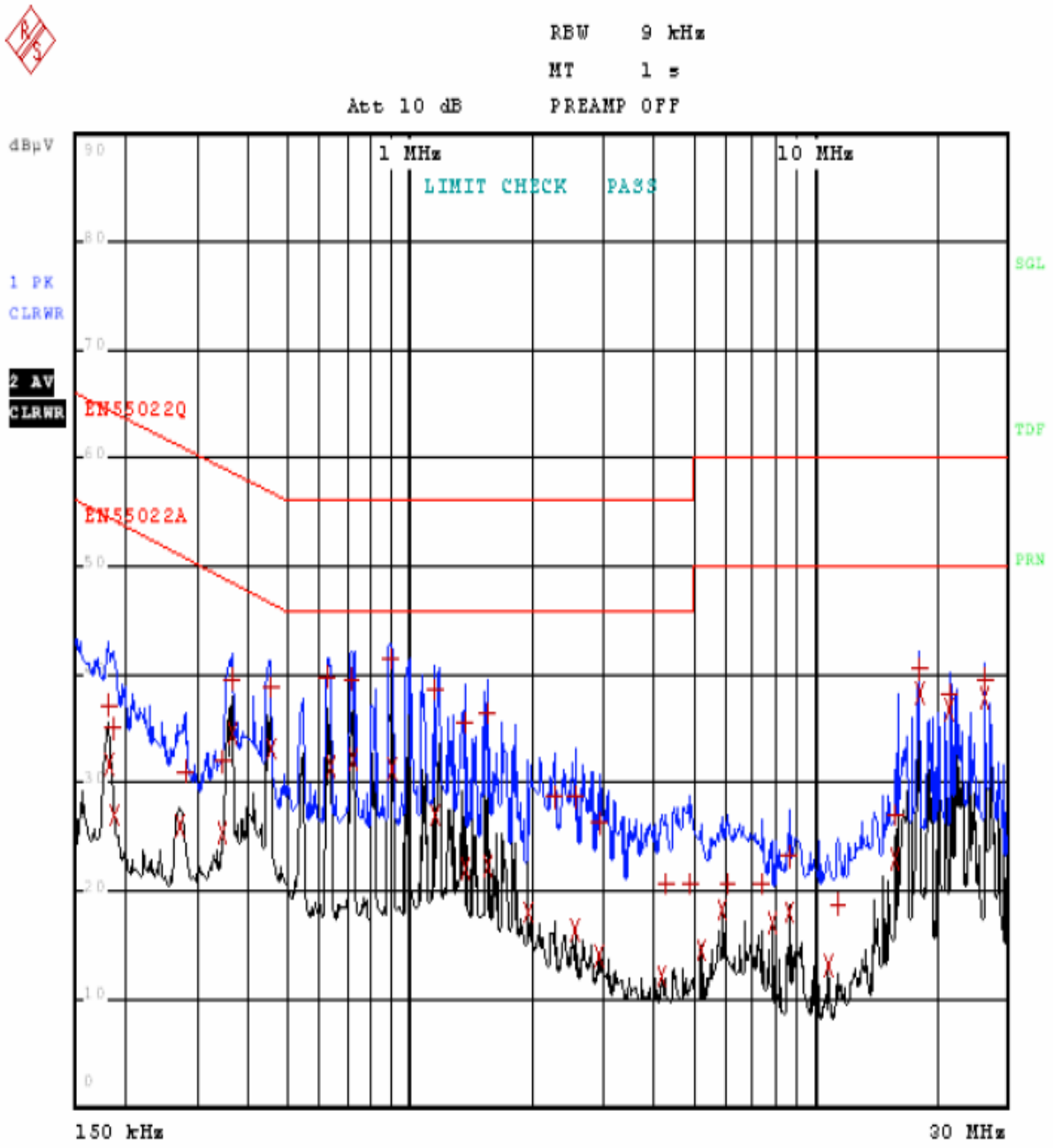

Comment: EX1101QL NEUTRAL (DO NOT GROUND)
Date: 17.DEC.2004 09:10:16

Appendix 2. Phorographs of EUT in side PCB

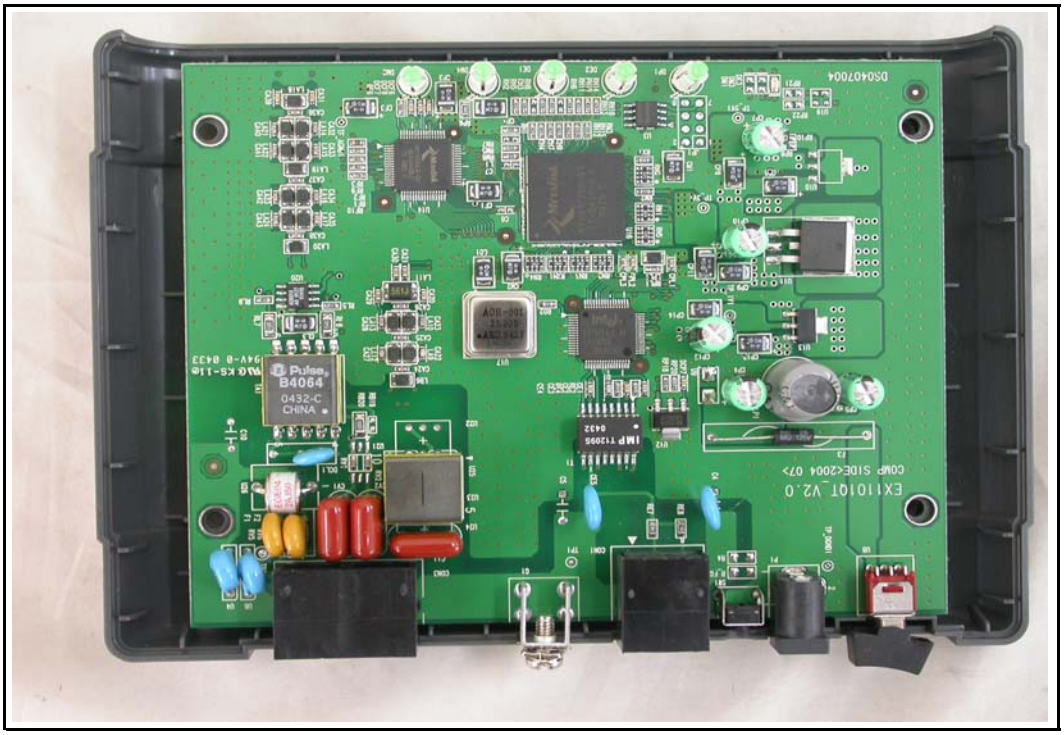

Appendix 3. Block diagram of EUT

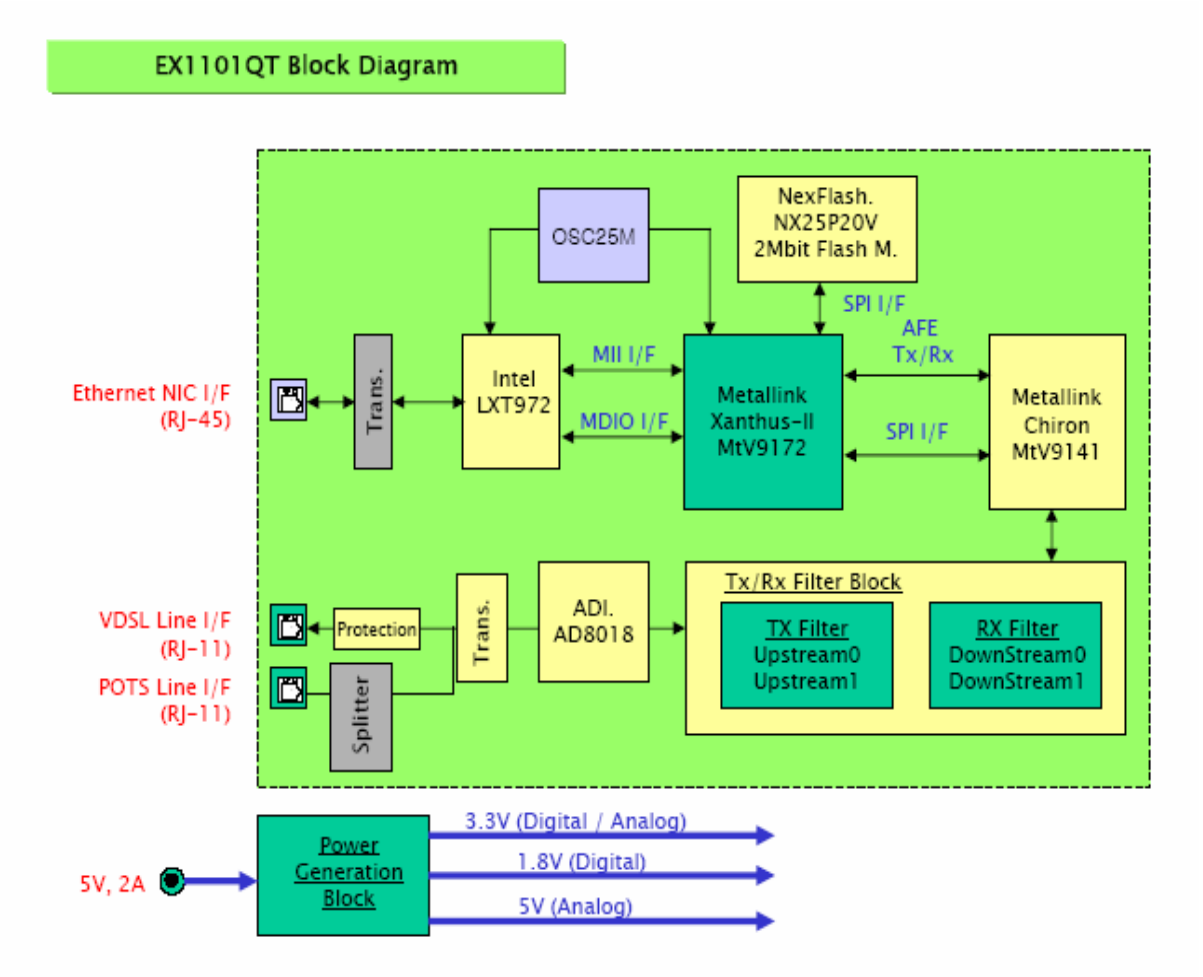

Appendix 4. Circuit Diagram