NOTCHCELL Repeater System Description

SD-UPA10N-04A(V1.2)

Copyright

Copyright of this manual belongs to R-TRON, Inc.
Reproduction, distribution or revision of part or all of contents in this manual in any form without written permission of R-TRON, Inc. is prohibited.

Registered Trademark

R-TRON are registered trademarks of R-TRON, Inc.
Other products and company names mentioned here in this manual might be trade marks or trade names of their respective owners.

RF Repeater

Band Selective Type

Sprint PCS

English

The results of using the information not mentioned in this manual or the risk of misunderstanding this document remain with the user.
The information in this manual is subject to change due to function enhancement, change of design, etc. If you want the modified manual or have any question on this manual, please contact us with information below:

Address : Customer Support Center, Jisan IT Venture Bldg., 2/3F, 1004-9/10, Doksan-Dong, Gumcheon-Gu, Seoul 153-829 , South Korea
Tel : +82-2-896-4101

Copyright © 2004 R-TRON, Inc. All Rights Reserved

Revision History

Version	Date of revision	Reason for revision	Revision Description
V1.0	March.09.2005	First Edition	

CONTENTS

1. Overview ---------- 5
2. Repeater Design ---------- 7
2.1 System specification ---------- 7
2.1.1 Environmental conditions ---------- 7
2.1.2 System features ---------- 7
3. Repeater Configurations ---------- 9
3.1 Main Box---------- 9
3.2 PSU Box ---------- 10
3.3 Sub Unit Overview ---------- 10
3.3.1 UDC(Up-Down Converter unit) with LNA ----------10
3.3.2 MCPA(Multi Carrier Power Amplifier unit) ---------- 11
3.3.3 ARCU(Advanced Repeater Control Unit board) ---------- 12
3.3.4 DPX(Duplexer) ---------- 12
3.3.5 PSU(Power Supply Unit) ---------- 13
3.3.6 Heat Module ---------- 13
3.3.7 ARIU(Advanced Repeater Interface Unit board) ---------- 14
3.3.8 Arrestor ---------- 14
3.3.9 EMI/EMC Filter ---------- 14
4. Block Diagram ---------- 15
4.1 Downlink signal path ---------- 15
4.2 Uplink signal path ---------- 15
4.3 Band Selective Repeater ---------- 15
4.4 Repeater Setup ---------- 16
5. Board and Unit Descriptions ---------- 16
5.1 MCPA for downlink ---------- 16
5.2 PA for uplink ---------- 17
5.3 UDC for downlink ---------- 18
5.4 UDC for uplink ---------- 20
5.5 ARCU ---------- 22
5.6 ARIU ---------- 23
5.7 DPX ---------- 24
5.8 Arrester ---------- 26
5.9 PSU ---------- 26
5.10 EMI/EMS Filter ---------- 27
5.11 Heater Module ---------- 28
5.12 Connector Ports ---------- 29
5.12.1 Local OMT port ; Main Box ---------- 29
5.12.2 AC IN; Main Box ---------- 29
5.12.3 AC IN; PSU Box ---------- 30
5.12.4 DC IN 24V; PSU Box ---------- 30

1 Overview

R-TRON NOTCHCELL repeaters are used to fill out uncovered areas in CDMA1900 mobile systems, such as base station fringe areas, road tunnels, business and industrial buildings, etc.

A NOTCHCELL repeater receives signals from a base station, amplifies and retransmits the signals to mobile stations. Also it receives, amplifies and retransmits signals in the opposite direction. Both directions are served simultaneously.

To be able to receive and transmit signals in both directions, the repeater is connected to a donor antenna directed towards the base station and to a service antenna directed towards the area to be covered.

Control of the repeaters is performed using a desktop or notebook loaded with the R-TRON OMT, *Operation and Maintenance Terminal*, which can communicate with the repeaters either locally or remotely via wireless

data modem. Remote operation can be performed either via CDMA net.

To be able to control many R-TRON NOTCHCELL repeaters in common, there is a Sprint EMS center.

R-TRON NOTCHCELL Repeaters work as bi-directional amplifiers.

A repeater receives, amplifies, and retransmits signals downlink and uplink simultaneously, i.e. from the base station via the repeater to the mobile stations and from the mobile stations via the repeater to the base station.

The repeater can be connected to a donor antenna directed towards the base station, and to a distributor antenna directed towards the area to be covered. These antennas are connected to the repeater with type-N connectors.

To prevent instability due to poor antenna isolation, R-TRON has developed NOTCHCELL Repeater. R-TRON NOTCHCELL Repeaters become clear of having superiority over the other RF repeaters in the world.

The R-TRON NOTCHCELL Repeaters are controlled by powerful microprocessors. Alarm and operational status LEDs are visible on the bottom of the repeater.

The repeater works with convection cooling without fan.

Operational parameters, such as gain, power levels, alarm condition, Automatic Level Control condition, etc. are set using a desktop or notebook and R-TRON OMT, which communicate, locally via RS-232C cable, with the repeater. Remote operation is performed via CDMA net.

2 Repeater Design

2.1 System specification

2.1.1 Environmental conditions

Item	Standard	Remark
Power supply	AC110V±20%, 50/60Hz±5% or +24Vdc battery backup available	
Operating temperature	- 40 ~ +55 ℃	
Storage temperature	- 40 ~ +70 ℃	
Humidity	95 %	
Consumption power	400 W(Normal), 1200W(Max. In case of the Heater acts at lower temperature)	
Rainfall	100 mm/Hr	
Water proof	NEMA 4x	
Wind pressure	60m/s	

<Table 2-1> Environmental Conditions

2.1.2 System features

A. NOTCHCELL repeater

Item		SPEC	Remark
Frequency bandwidth		15MHz	
Toward Handset (Down Link) Toward BTS (Up Link)		1930 ~1945MHz 1850 ~1865MHz	
Input range (dBm)		-52 ~ -27dBm(DL), -67 ~ -42dBm(UL)	Based on 11 carriers
Max. Output power	DL	43dBm (20W) / Total	Based on 11 carriers
	UL	28dBm (0.631W) / Total	
Gain range (dB)		70 ~ 95dB	Max. gain ±0.5dB
Gain control / Interval (dB)		25dB / 1dB	
Noise figure	Maximum Gain	4dB max.	
	Minimum Gain	8dB max.	
In band flatness		2dB max.	
Absolute group delay		5㎲ max.	
Interface		RS-232 and Modem	
VSWR		1:1.5 max.	
Impedance		50Ω	
RF connector (Antenna Port)		N-Female	
Size (W x H x D)	Main Box	470*700*370mm	
	PSU Box	450*384*265mm	
Weight	Main Box	Less than 50Kg(95lbs)	
	PSU Box	Less than 25Kg(55lbs)	

<Table 2-2> Repeater Features

B. NOTCHCELL Antenna

Item	SPEC		Remark
	Donor ANT	Service ANT	
Frequency Range	1850 ~1910 MHz, 1930 ~ 1990 MHz		
Band Width	60MHz, 60MHz		
V.S.W.R	1:1.5 이하	1:1.5 이하	
Gain	17 dBd ±1 dB	17 dBd ±1 dB	
Half-Beam width (H)	20 ° ±3 °	45 ° ±5 °	
Half-Beam width (V)	20 ° ±3 °	8 ° ± 2 °	
Front-to-back ratio	≥ 45 dB	≥ 45 dB	@180deg
First-to-side ratio	≥ 13 dB	≥ 13 dB (Upper)	
Isolation	≥ 100 dB ANT Distance (Horizontal) ≥1.5m		@180±90deg
Impedance	50 Ω	50 Ω	
Polarization	Vertical	Vertical	
Max Power	200 W	200 W	
RF connector	7/16" DIN-female	7/16" DIN-female	
Size (W*H*D)	700*1000*150 mm	310*1500*120 mm	
Rated Wind Velocity	60 m/sec	60 m/sec	
Weight	Less than 20 kg(44lbs)	Less than 17 kg(38lbs)	
Radiator Material	Copper	Copper	
Radome Material	Fiberglass	Fiberglass	
Tilt	0 ° ~ 15 °	0 ° ~ 15 °	

<Table 2-3> Antenna Features

The repeater is housed in a cast aluminum chassis that is waterproof, class NEMA 4x, for outdoor use. The chassis has a design suited for outdoor use as well as indoor use.

The chassis consists of a cabinet and a cover joined with hinges. The cabinet contains the repeater circuitry. Inside the repeater, a number of amplifier boards are individually shielded and located under a metal cover that can be folded out. These amplifier boards are different types depending on the supported system.

The followings are the Technical Specification of NOTCHCELL Repeater.

CAUTION:

The antenna used for this transmitter must not exceed 20.15dBi and must be installed to provide a minimum separation distance of 4.09 meters from all persons.

3 Repeater Configurations

The repeater system consists largely of the Main Box and PSU Box. The main modules or units of repeater are as follows:

DPX (Duplexer), MC PA (Multi Carrier Power Amplifier unit), ARCU (Advanced Repeater Control Unit board), ARIU (Advance Repeater Control Unit board), UDC (Up-Down Converter unit, with LNA), Arrestor, PSU (Power Supply Unit), Heater Module, EMI/EMC Filter.

3.1 Main Box

The following is the picture of Main box.

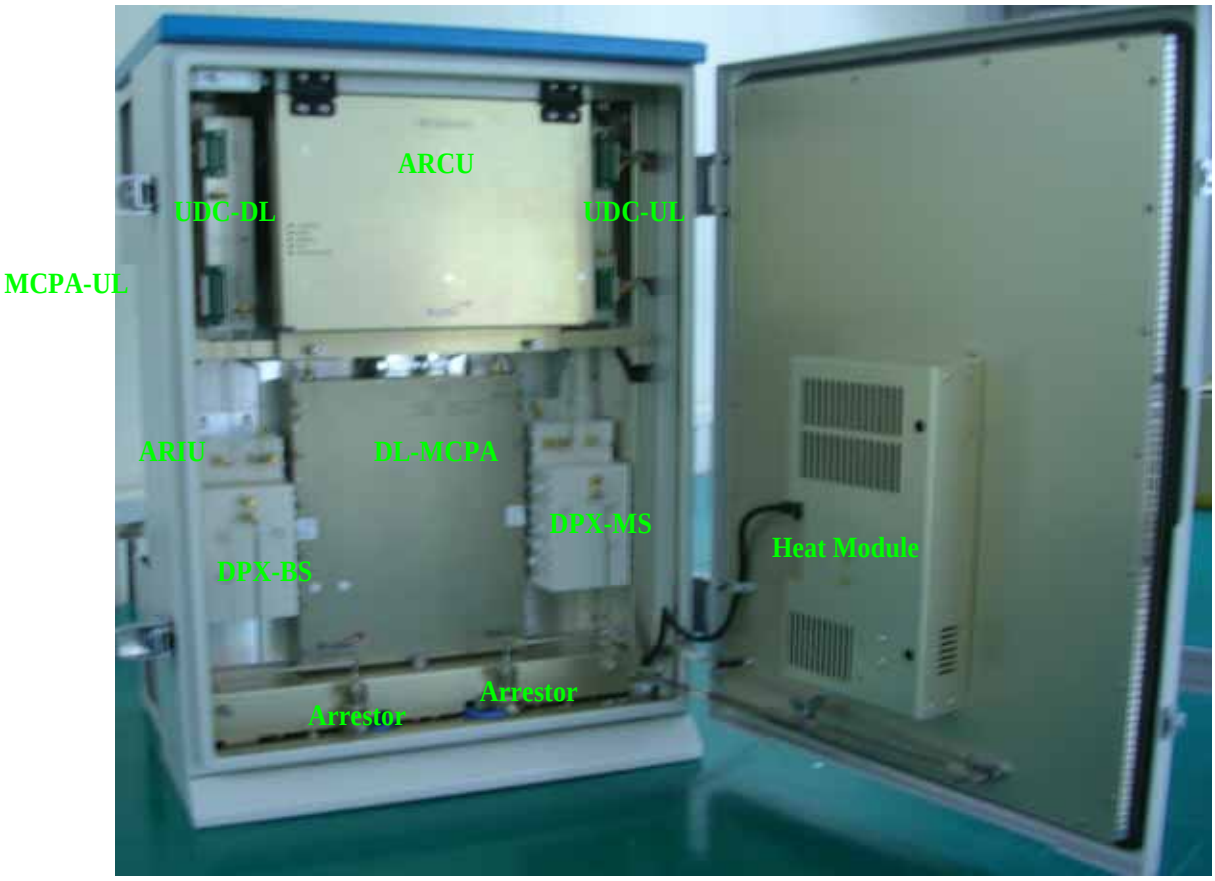

Figure 1 Sub units in a band selective repeater (Main Box)

A cabinet for a band selective repeater is equipped with two pair of UDC (with LNA) and PA units, one pair for downlink (DL) and one pair for uplink (UL). The described cabinet is equipped for bi-directional band selective operation.

3.2 PSU Box

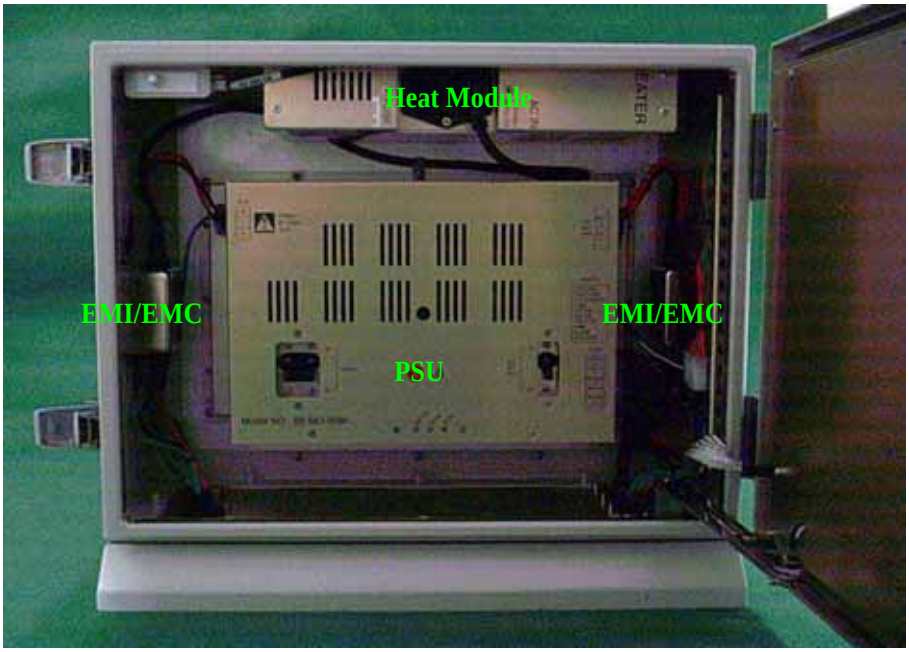

Figure 2 PSU Box

3.3 Sub Unit Overview

Functionally, repeaters are built up with several sub units. The sub units of main repeater are as follows:

Band selective repeaters can handle multi-carriers over a wide band. The bandwidth is adjustable. A band selective repeater requires two UDC (with LNA) units and two PA units in the repeater.

One pair of UDC (with LNA)/PA units is for uplink signaling and one pair is for downlink signaling.

3.3.1 UDC (Up-Down Converter unit) with LNA

Figure 3 UDC-UL

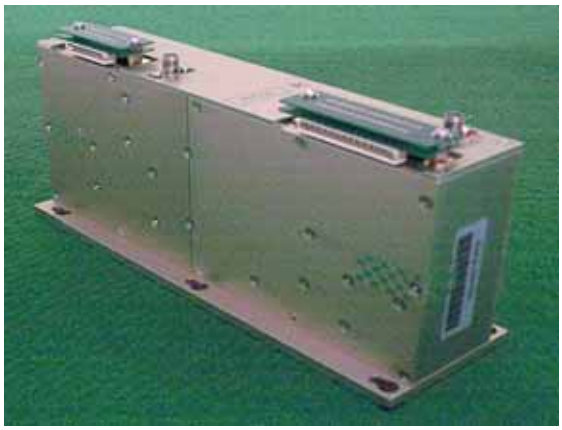

Figure 4 UDC -DL

UDC converts (Down) a signal received from LNA and gets rid of signal which is out of the bandwidth range, then converts (Up) again into the original frequency range and controls 'Path Gain'.

3.3.2 MCPA (Multi Carrier Power Amplifier unit)

Figure 5 MCPA -UL

Figure 6 MCPA -DL

CDMA repeaters can be equipped with two MCPA that boosts the output gain with typically 35~40dB. PA (Power Amplifier) amplifies RF signal received from UDC (Downlink) up to 50 dB and its Maximum RF Output is 45 dBm in terms of CDMA SFA standards.

3.3.3 ARCU (Advanced Repeater Control Unit board)

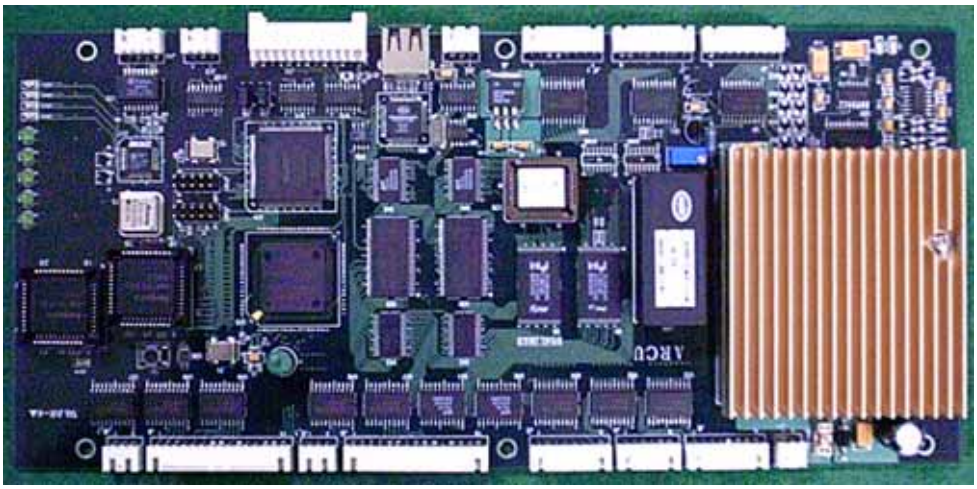

Figure 7 ARCU

The ARCU board is the control unit of the repeater. The ARCU board is used to supervise and control operational parameters such as gain control, ALC handling, etc. The ARCU takes care of alarms and the event log, password and logon, and many other procedures.

3.3.4 DPX (Duplexer)

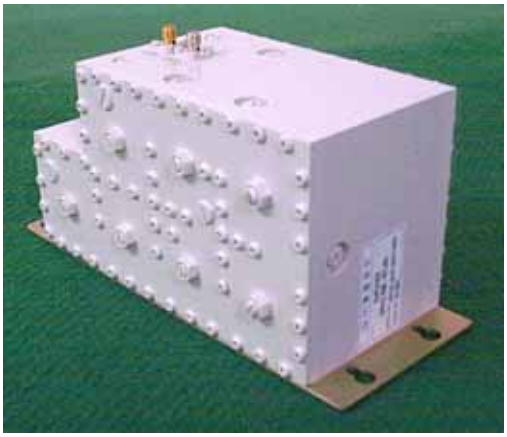

Figure 8 DPX-BS

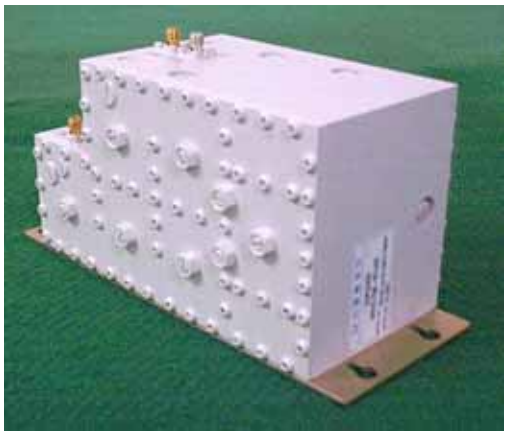

Figure 9 DPX-MS

The Duplexers are located in the lower part of the repeater cabinet. MS and BS duplexers are identical.

3.3.5 PSU (Power Supply Unit)

Figure 10 PSU

PSU receives AC 110V (Voltage) from outside and provides DC Power to each unit. In case AC Power shuts down, PSU supplies power to each unit using battery box (+24v) which is connected to 'BATT IN' locating under main repeater body. In case AC power is restored, the battery, connected to outside, is converted into being charge with electricity automatically. (Battery Box is optional)

3.3.6 Heat Module

Figure 11 Heat Module

It installed to maintain stable characteristic of the repeater in cabinet inside in the low temperature. The having fever heat capacity is a maximum 400Watt.

3.3.7 ARIU (Advance Repeater Interface Unit board)

Figure 12 ARIU

BTS sends the alarms of Notch repeater and the operator can check and control.

3.3.8 Arrestor

Figure 13 Arrestor

Arrester uses a semiconductor varistor to protect equipment from lightning.

3.3.9 EMI/EMC Filter

Figure 14 EMI/EMC Filter

It use to prevent the noise ingredient is radiated with the spurious to happen to the outside in the repeater.

4 Block Diagram

The main signal paths are described in general in the next section and detailed under each block diagram.

4.1 Downlink signal path

The downlink signal path, i.e. from the base station through the repeater to the mobile station, is described for NOTCHCELL repeater under the block diagrams on the following pages.

4.2 Uplink signal path

The uplink signal path, i.e. from the mobile station through the repeater to the base station, is identical to the downlink path but the other way round. Only some levels and component values differ.

4.3 Band Selective Repeater

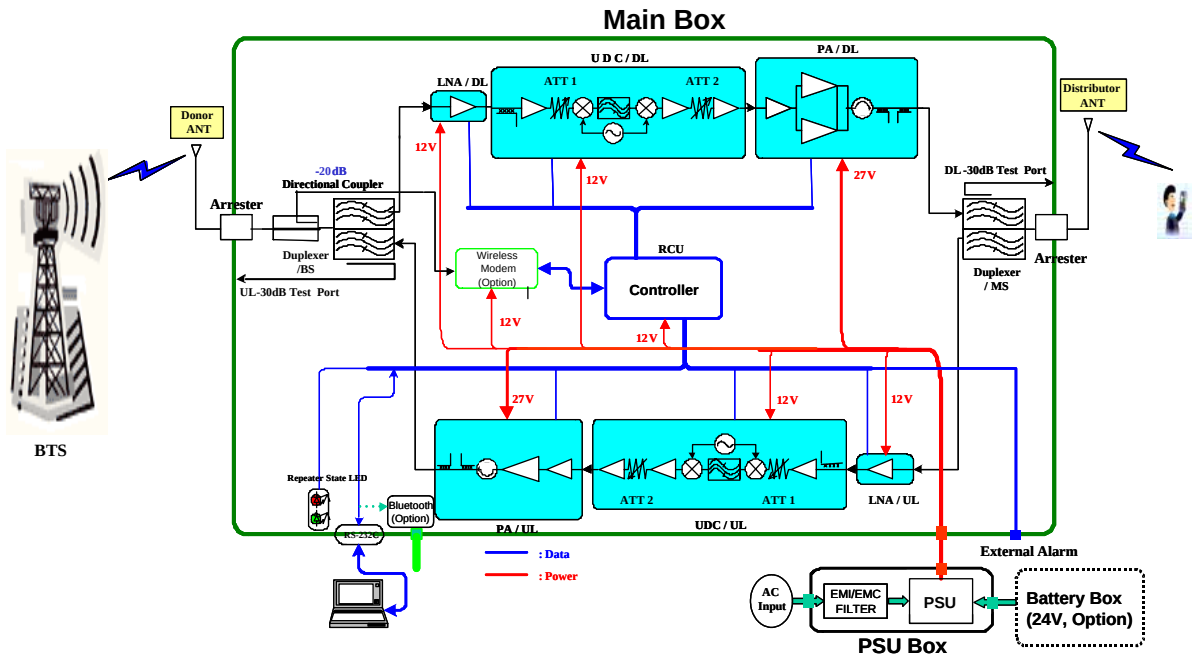

Figure 15 Block Diagram of Band Selective Repeater

Figure 15 shows a block diagram of a band selective repeater. This diagram is applicable to repeaters for CDMA systems.

4.4 Repeater Setup

The repeater parameters can be set locally by means of a desktop or notebook running OMT. The PC is connected to the ARCU via the RS-232 PC port.

* Option (Bluetooth Adapter): When it is used, it enables wireless integration

5 Board and Unit Descriptions

5.1 MCPA for downlink

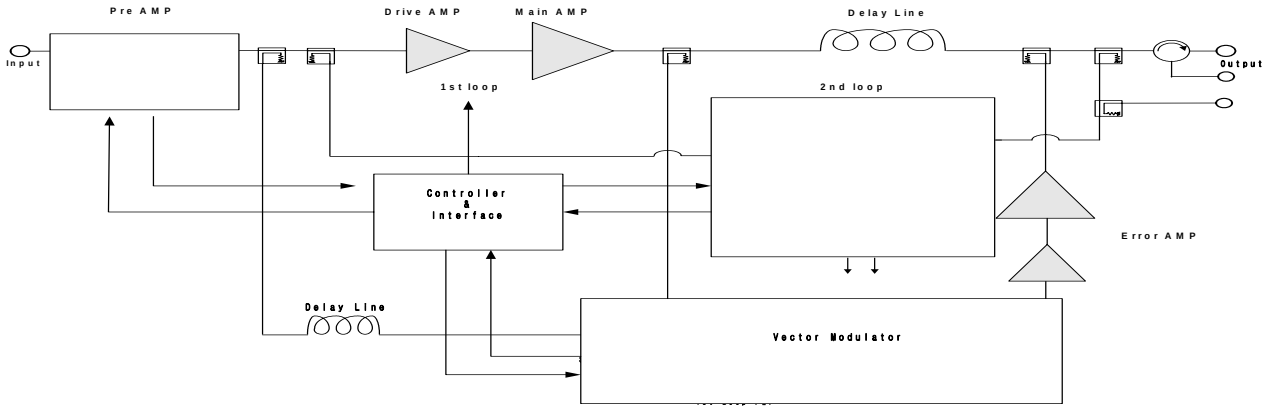

Figure 16 Block diagram of Power Amplifier unit for downlink

MCPA amplifies RF signal received from UDC (Downlink) up to 50 dB and its Maximum RF input is 42 dBm in terms of CDMA SFA standards.

Connection

Port	Connected to
RF IN	RF OUT on the UDC-DL board.
RF OUT	DL on the DPX-MS duplex filter.
CON	On the ARCU board
CON	27V port on the PSU unit

Specification

Item	Specification		Remarks
Frequency	1930MHz~1945MHz		
Bandwidth	15MHz		
Gain	50±0.5dB		
Output Power	45dBm (32W)		
I/O Port	1: GND 3: VSWR Alarm 6: PA On/Off	2: Over Power Alarm 5: Over Temp 7: Cable Open	Normal: Low Fail: High

	8: Transmit Power Monitor 9: Reflect Power Monitor	
Mute Function	5V⇒ Off, 0V⇒On	
Power Detector	0.1 ~ 5V	
Voltage	DC 27V	
RF connector	Type-SMA, female	

5.2 PA for uplink

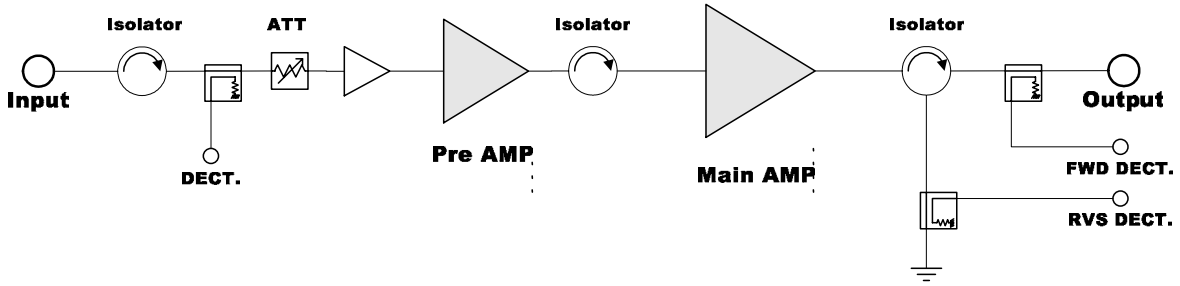

Figure 17 Block diagram of Power Amplifier unit for uplink

PA (Power Amplifier) amplifies RF signal received from UDC (Downlink) up to 40dB and its Maximum RFOutput is 30dBm in terms of CDMA SFA standards.

Connection

Port	Connected to
RF IN	RF OUT on the UDC-UL board.
RF OUT	UL on the DPX-BS duplex filter.
CON	On the ARCU board.
CON	+27V on the PSU unit.

Specification

Item	Specification	Remarks
Frequency	1850MHz ~1865MHz	
Bandwidth	15MHz	
Gain	40±0.5dB	
Output Power	30 dBm	
I/O Port	1: GND 2: Over Power Alarm 3: VSWR Alarm 5: Over Temp 6: PA On/Off 7: Cable Open 8: Transmit Power Monitor 9: Reflect Power Monitor	Normal: Low Fail: High

Mute Function	5V⇒ Off, 0V(On	
Power Detector	0.1 ~ 5V	
Voltage	DC 27V	
RF connector	Type-SMA, female	

5.3 UDC for downlink

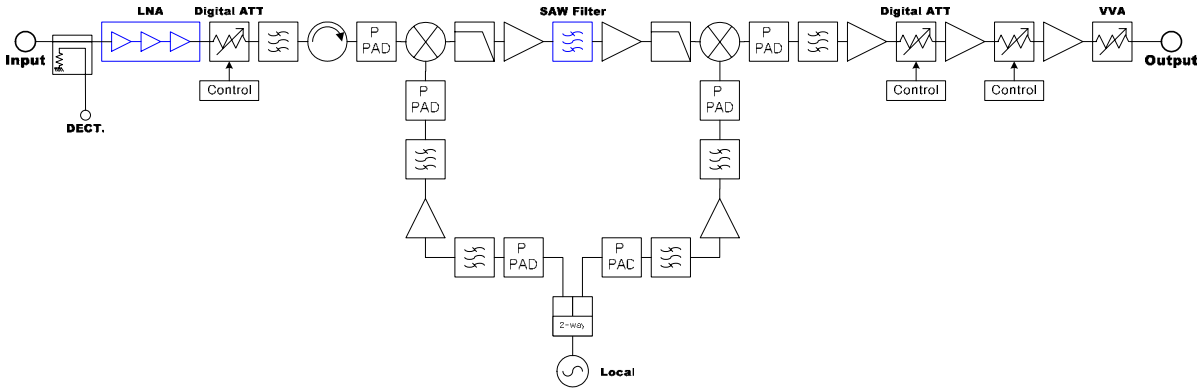

Figure 18 Block diagram of Up-Down converter unit for downlink

The above product is Un-Down Converter for Downlink and it is composed of three parts (Down Converter, IF and Up Converter)

Down Converter

Down Converter consists of RF level detector, BPF, Digital Atten, AMP and Analog Atten, Mixer. RF level detector converts RF signal into DC, which is able to detect signal level. The first BPF removes signal out of required bandwidth among the inputted signal from LNA and AMP compensates the loss from the first BPF. Digital Atten, which is connected to Controller, operates to control Path Gain. Analog Atten is used for minute control of Path Gain. Mixer converts RF into IF (IF-70MHz)

IF

IF is composed of Filter (LPF and SAW) and AMP. LPF removes spurious signal which is higher passing band and SAW Filter gets rid of unwanted signal which is out of required bandwidth. AMP compensates loss which occurs when signal passing through Filter.

Up Converter

Up Converter consists of Mixer, AMP, BPF, Digital Atten, Analog Atten and RF level detector. Mixer is used to convert IF (70 MHz) to Down Link Path RF Frequency. BPF is to remove signal out of service range. Digital Atten operates connected to controller to control Path Gain.

LNA

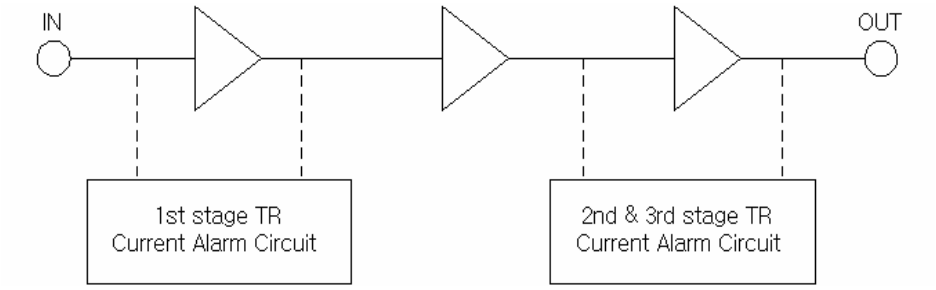

Figure 19 Block diagram of Low Noise Amplifier unit for downlink.

This product is a low noise amplifier used for NOTCHCELL downlink. It is generally composed of RF block and Fault block (Alarm circuit).

RF block has approximately 30dB gain at CDMA1900 through 3-stage amplification, and its noise index is 0.9dB. Fault block is a circuit that detects current flowing in each TR of RF block.

Fault circuit detects current flowing in 1st stage TR and 2nd & 3rd stage TRs. If TR current is less or more than set value due to the change of LNA environment, it generates TTL signal (5V).

Connection

Port	Connected to
RF IN	DL on the DPX-MS.
RF OUT	RF IN on the PA-DL unit.
CON	On the ARCU board
CON	On the PSU unit.

Specification

Item	Specification	Remarks
Frequency	1930MHz ~1945MHz	
Bandwidth	15MHz	
Gain	24~49dB±0.5dB	Att. : 25dB
Voltage	DC 12V	
RF connector	Type-SMA, female	

5.4 UDC for uplink

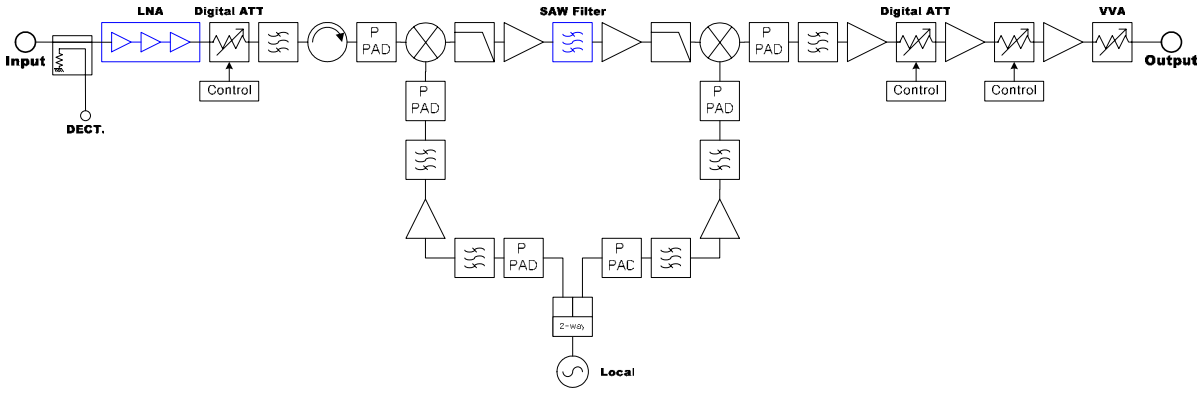

Figure 20 Block diagram of Up-Down converter unit for uplink

The above product is Down Converter for Uplink and it is composed of three parts (Down Converter, IF and Up Converter)

Down Converter

Down Converter consists of RF level detector, BPF, Digital Atten, AMP and Analog Atten, Mixer. RF level detector converts RF signal into DC, which is able to detect signal level. The first BPF removes signal out of required bandwidth among the inputted signal from LNA and AMP compensates the loss from the first BPF. Digital Atten, which is connected to Controller, operates to control Path Gain. Analog Atten is used for minute control of Path Gain. Mixer converts RF into IF (IF-70MHz)

IF

IF is composed of Filter (LPF and SAW) and AMP. LPF removes Spurious signal which is higher passing band and SAW Filter gets rid of unwanted signal which is out of required bandwidth. AMP compensates loss which occurs when signal passing through Filter.

Up Converter

Up Converter consists of Mixer, AMP, BPF, Digital Atten, Analog Atten and RF level detector. Mixer is used to convert IF (70 MHz) to Down Link Path RF Frequency. BPF is to remove signal out of service range. Digital Atten operates connected to controller to control Path Gain.

LNA

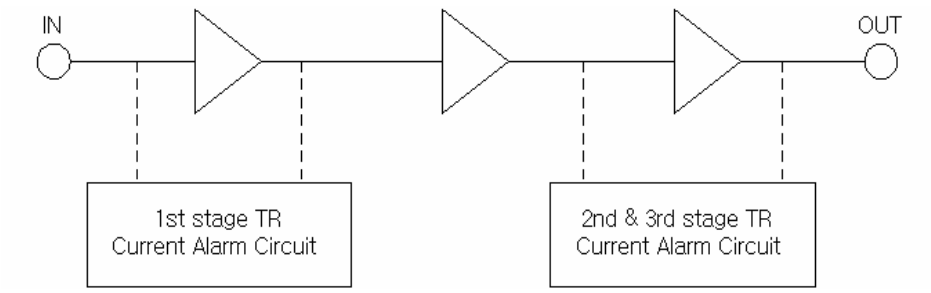

Figure 21 Block diagram of Low Noise Amplifier unit for downlink.

This product is a low noise amplifier used for NOTCHCELL downlink. It is generally composed of RF block and Fault block (Alarm circuit). RF block has approximately 30dB gain at CDMA1900 through 3-stage amplification, and its noise index is 0.9dB. Fault block is a circuit that detects current flowing in each TR of RF block. Fault circuit detects current flowing in 1st stage TR and 2nd & 3rd stage TRs. If TR current is less or more than set value due to the change of LNA environment, it generates TTL signal (5V).

Connection

Port	Connected to
RF IN	UL on the DPX-MS.
RF OUT	RF IN on the PA-UL unit.
CON	On the ARCU board
CON	On the PSU unit.

Specification

Item	Specification	Remarks
Frequency	1850MHz ~ 1865MHz	
Bandwidth	15MHz	
Gain	34~59dB±0.5dB	Att. : 25dB
Voltage	DC 12V	
RF connector	Type-SMA, female	

5.5 ARCU

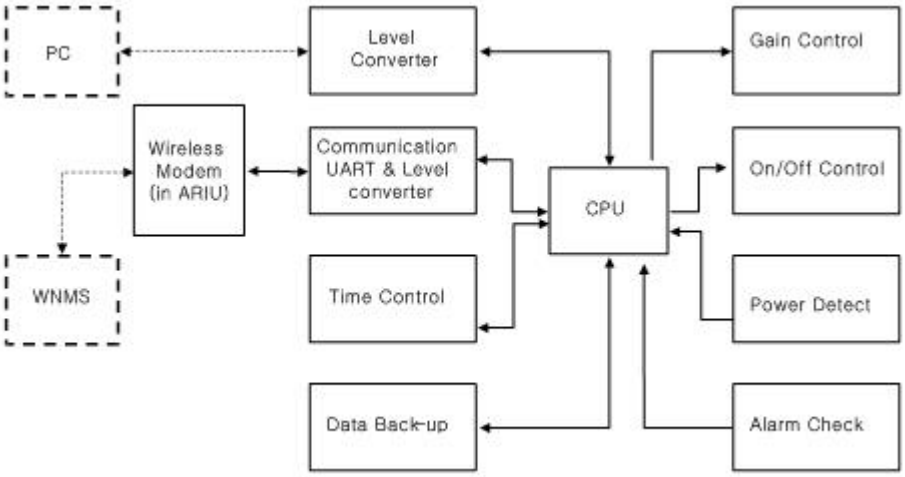

Figure 22 Block diagram of ARCU

The ARCU board is the central board in the repeater, located in the repeater cabinet.

The ARCU board contains a microprocessor, main memory, flash memory for the ARCU software, NVRAM memory for parameters and the event log , ports for local and remote communication, battery powered real-time clock, etc.

The ARCU board is used to supervise and control operational parameters such as gain control, ALC handling, etc. The ARCU takes care of alarms and the event log, password and logon, and many other procedures.

The real-time clock on the ARCU board is used for alarm and for the event log.

Connection

Port	Connected to
J1	On the PSU board.
J2	On the PA-DL unit.
J3	On the PA-UL unit
J4	On the UDC-UL, UDC-DL unit
J5, J5-1	On the UDC-UL unit
J6, J6-1	On the UDC-DL unit
J7	On the door

J7-1	Not used
J9, J9-1	On the W/M (Wireless Modem)
J11	On the PSU board
J12	RS-232 (Local OMT) on the bottom of repeater
J13	Consol for microprocessor.
J16	LAN for microprocessor
J21	Not used

5.6 ARIU

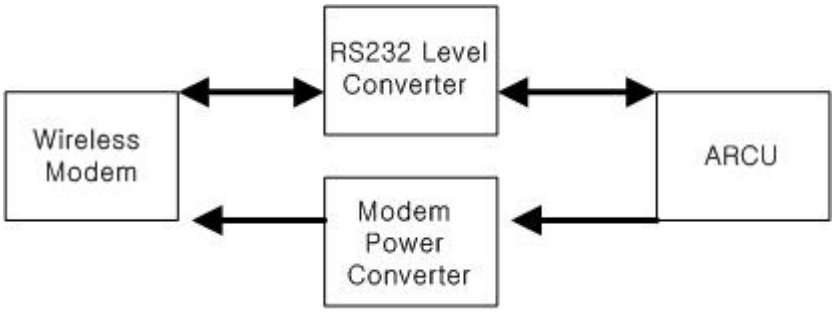

Figure 23 Block diagram of ARIU

ARIU Module does to do WNMS interconnection function through ARCU and Wireless Modem (Expedite C201).

Specification

Item	Specification	Remarks
Power Requirements	DC 4.2V, DC3.3V	
Regulator	MIC29502BU	
RS232 Converter	MAX3233	

5.7 DPX

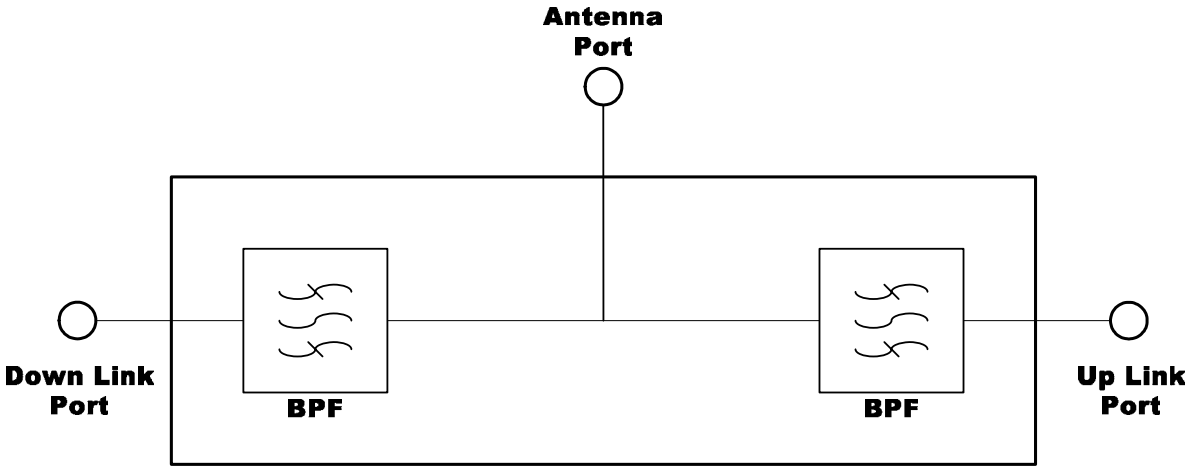

Figure 24 Block diagram of DPX

The Duplexers are located in the lower part of the repeater cabinet. MS and BS duplexers are identical.

Connection

DPX-MS

Port	Connected to
ANT	Distributor ANT on the bottom of repeater
DL	RF OUT on the PA-DL unit
UL	RF IN on the UDC (with LNA)-UL unit
MON	MON on the bottom of repeater or other Units

DPX-BS

Port `	Connected to
ANT	DONOR ANT on the bottom of repeater
DL	RF IN on the UDC-DL unit
UL	RF OUT on the PA-UL unit
MON	MON on the bottom of repeater or ANT on the wireless Modem Unit

Specification

DPX-MS, DPX-BS

Item	Specification	Remarks
Frequency	DL: 1930.625MHz~1944.375MHz	
	UL: 1850.625MHz~1864.375 MHz	
Bandwidth	13.75 MHz	
Insertion loss	1.2dB	

Flatness	1.0dB	
Separation between DL/UL frequency	100dB	
RF connector	Type-SMA, female	
Coupling value	Coupling: 20dB, 30dB, 40dB±2dB, Monitoring: 30dB±2dB	
VSWR	1:1.3	

5.8 Arrestor

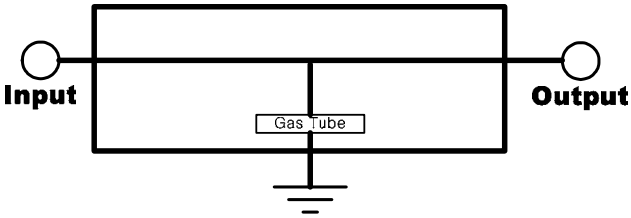

Figure 25 Block diagram of Arrestor

Arrester uses a semiconductor varistor to protect equipment from lightning

Specification

Item	Specification	Remarks
Frequency	1800MHz~2000MHz	
Bandwidth	200MHz	
Insertion loss	0.2dB	
VSWR	1:1.2	
Surge current	1.2 x 50μs , 6 kV / 3 kA	
RF connector	Type-N, female	

5.9 PSU

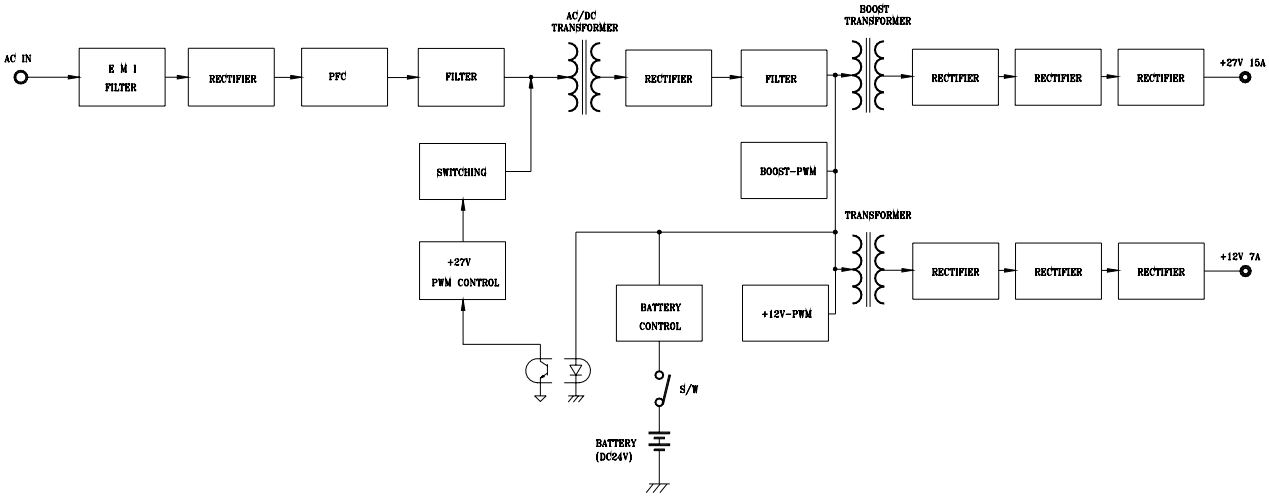

Figure 26 Block diagram of PSU

PSU receives and converts input power (AC 110V) into DC +27V or +12V. In case PSU is connected to outside Battery, it provides automatic power back-up function when AC power input is shut off. When power level of a

storage battery is lower than +21V (±1.0V), battery input power is shut down to protect battery and it is how to Prevent the storage batter from the over-discharge.

The output power, as converting into AC_IN/Battery of Battery/AC_IN, operates in a proper way and supply the stable power until the over-discharge function works.

Specification

Item		Input	Output	
AC / DC	Voltage	AC110v ±20% 50/60Hz ±5%	27V	12V
			Output Voltage Variation Ratio: less than ±2%	
	Current		15A	7A
Efficiency		More than 80%		
Power factor		More than 90%		
Alarm	AC fail	Normal: Low, Abnormal: High		
	DC fail			
	Battery fail			

5.10 EMI/EMC Filter

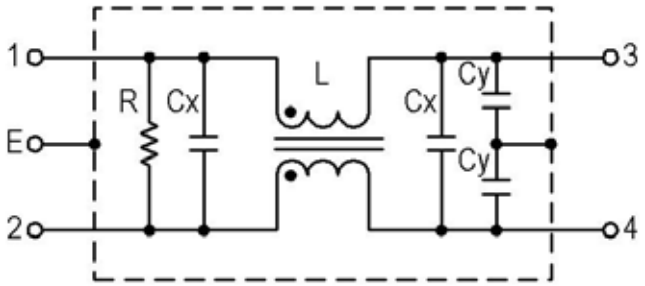

L : 1.2mH +50% -30%
Cx : 0.22μF ±20%
Cy : 4700pF ±20%
R : 1.0MΩ ±5%

Figure 27 Block diagram of EMI/EMC Filter

EMI/EMC Filter in all entrances of PSU Box prevents that various spurious and consecutiveness noise ingredients that happen in Repeater are radiated to outside.

It should be as most as possible near with power input/output port, and Wires do so that to do not become overlap each other.

Also, must do so that high frequency resistance may minimize in grounding paper as possible when do mounting to Repeater.

When fix EMI/EMC Filter to metal case for this, after improving electricity conductibility removing coats of paint of contact part, do to ground in the nearest distance coming ground connection terminal.
In case of use continuously exceeding rating current or use exceeding operating temperature, its performance and reliability are fallen.

Specification

Item	Specification	Remarks
Rated Voltage	250V AC/DC	
Rated Current	20A	
Rated Frequency	50/60Hz	
Leakage Current	0.75Ma max. at 250V AC 50/60Hz	
Insulation Resistance	200MΩ min. AT 500V DC	
Test Voltage	AC 2000V between line to earth for 1 minute	
Operating Temperature	-25℃ ~ +85℃	

5.11 Heater Module

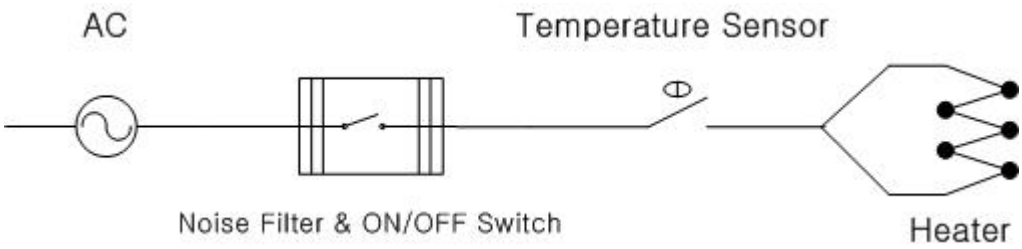

Figure 28 Block diagram of Heater Module

Heater Module attached inside Main Box and PSU Box for normal action of equipment in limit low temperature state because Repeater's operating temperature condition is '- 40 to -55℃'.

Specification

Item	Specification	Remarks
Input Power	AC100V +/-20% 50/60Hz +/-5%	
Current	5A max.	

Heater Operating Temperature	Act: Board temperature below +15℃±5	
	Stem by: Board temperature Higher than +20℃	
Heating Power	400watt	
Size	285 ×157 × 55	

5.12 Connection Ports

5.12.1 Local OMT port ; Main Box

PC port RS-232 is a LOCAL OMT port used for local PC communication. The connector is found to the bottom of the cabinet. LOCAL OMT is a 3-pole MS connector.

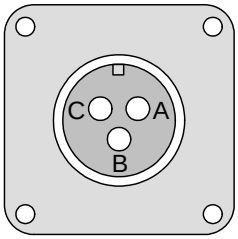

Figure 29 LOCAL OMT - PC connector pinning

A: Data from repeater to OMT

B: Data from OMT to repeater

C: GND

5.12.2 AC IN ; Main Box

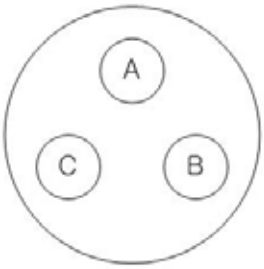

MS20-3P, Male	
A	PE
B	L
C	N

5.12.3 AC IN ; PSU Box

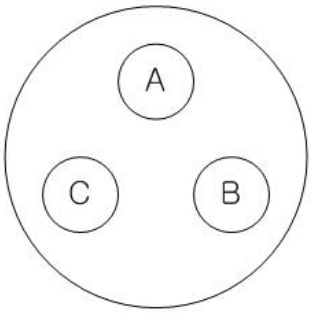

MS22-2, Male	
A	PE
B	L
C	N

5.12.4 DC IN 24V ; PSU Box

***Use at DC power (or Battery) connection necessity by Backup in case of is shut off AC.**

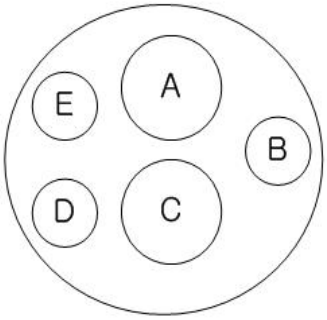

MS24-12, Male	
A	+
B	Not used
C	-
D	Not used
E	Not used

NOTCHCELL Repeater System Description

Copyright © 2004 R-TRON, Inc.
All Rights Reserved

Copyright of this manual belongs to R-TRON, Inc.
Reproduction, distribution or revision of part or all of contents in this manual in any form without written permission of R-TRON, Inc. is prohibited.
The information in this manual is subject to change for the reason of function improvement, design alteration, etc. without any prior notification.