Removing the Battery Pack

Ensure the ON/OFF volume knob of the radio is set to OFF position.

Press and hold down the battery latch.
Slide the battery pack downwards until the battery locating tabs disengages from the radio locating slots, which then allows the battery to be separated from the radio.

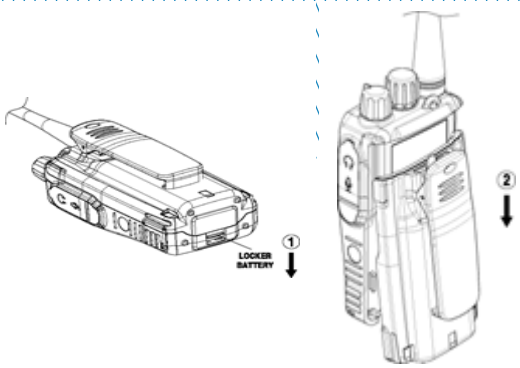

Charging Instructions

New batteries or batteries that have been inactive for a long time should be fully charged before placed into service. When the battery pack requires charging, the battery icon on the LCD will blink and the radio will sound a high pitch tone every second.

The power supply is compatible with a wide AC supply voltage range, and is therefore provided with plugs for multiple regions. Fit the appropriate plug to the power supply.

Plug the power supply cord into the desktop base, and then plug the power supply itself into the electricity power outlet.

The standard desktop charger has two slots for charging:

To recharge a portable radio with a battery fitted, turn off the radio and insert it into the front slot of the charger.

To recharge a standalone battery, insert the battery into the rear slot of the charger.
The green LED on the charger illuminates when the battery has been charged to 90% capacity. If 100% capacity is required, then continue recharging the battery for another 30 minutes.
A tri-color LED on the charger pocket provides an at-a-glance display of the charging status as follows

Status	LED
Charging	Solid Red
Charged	Solid Green
Error	Blinking Red
Battery too hot	Solid Orange

Basic Operation

On/Off Volume Switch
Turn the volume knob clockwise until a click is heard to turn the radio on.The audio volume level can be increased by turning the volume knob further clockwise. To turn the radio off, turn the volume knob fully counter-clockwise until a click is heard,

Channel Select Switch

Channel numbers are pre-programmed using a personal computer and Simoco's Field Personality Programmer (FPP) software. Turn the channel select Switch knob clockwise to select the next channel. Turn the knob switch counter-clockwise to select the previous channel. Channels can be organised into multiple zones. Use the keypad buttons on front of the radio to change zone through use of the appropriate menu function.

simoco
wireless solutions

SDP560 PORTABLE RADIO
BRIEF USER GUIDE

TNM-U-E-0185
ISSUE 1.0

INTRODUCTION

The SDP560 portable radio is a rugged, lightweight radio and provides extended communication range and excellent sound quality.

The SDP560 portable radio features many customisable parameters to suit individual requirements. Menus and Key Functions can be configured to customer requirements.

For greater operational functional detail, refer to the main User Guide, TNM-U-E-0186.

BEFORE USE

Antenna Installation

Place the antenna over the radio's antenna connector and rotate the antenna clockwise to engage the antenna connector thread. Continue rotating until tight.

CAUTION
Over tightening the antenna may cause damage to the antenna or connector, which in turn may affect the radio's performance.

Installing the Battery Pack

Ensure the ON/OFF volume knob is set to the OFF position.

1. Align the top of the locating tabs on the battery pack to the bottom of the locating slots on the radio.
2. Slide the battery pack upwards until the battery latch clicks into place.

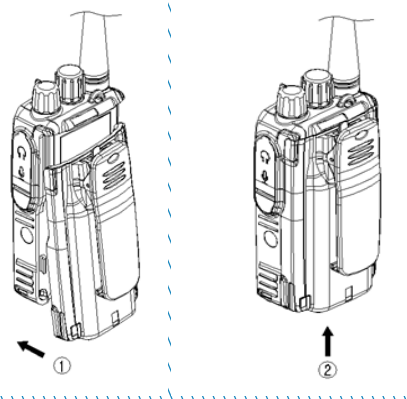

To Make a Call

The radio switches to transmit mode when the user presses and holds the PTT button on the right side of the radio. The status indicator LED lights red whilist the radio is transmitting. For optimal sound quality Simoco recommends positioning the microphone approximately 7-10cm in front of the user's mouth whilst talking normally. The radio returns to receive mode when the user releases the PTT button.

Speaker Microphone Jack

The speaker microphone jack on the left side of the radio is used for connecting external speaker microphones or similar audio accessories. It is also used for programming the radio using Simoco's Field Personality Programmer (FPP) software and programming cable.

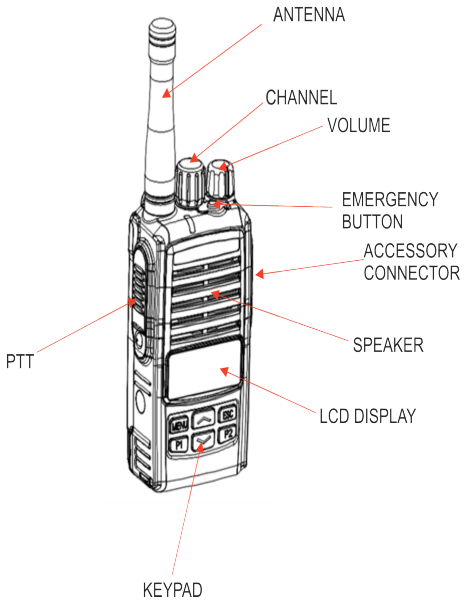

Emergency

The radio can be configured to declare an emergency when the "Emergency" button is pressed and held. The person to call when an emergency is declared, the channel to use for the emergency call, as well as the radio's behaviour whilst in emergency mode is highly configurable. Contact your system administrator for details on how emergency has been configured on your radio terminal

Indicators

A tri-color LED provides an at-a-glance display of the SDP560 portable radio's current status as follows: of
Solid Red: Transmitting.
Solid Green: Receiving.
Blinking Green: Selected channel is occupied by another conversation. Such conversations will not be audible if they use of a differently coded squelch than programmed for the current selected channel.
Blinking Red: Battery is low (Accompanied by an occasional , alert tone.
Blinking Orange: Cloning mode (During programming),.

Default Keypad Operation	
MENU	Menu / Enter / Select
ESC	Escape / Go Back
^	Previous Channel / Menu Entry
v	Next Channel / Menu Entry
P1	Customisable button
P2	Customisable button
PTT	The radio is switched to transmit mode when the user presses and holds the PTT

Contact your system administrator for details on how the customisable buttons have been configured on your radio terminal.

LCD Display

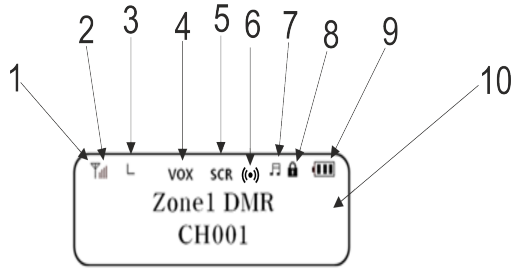

1	A signal icon resembling an antenna is on while the radio receives an RF signal. A 4-level bar graph to the right of this icon indicates the strenght of the received signal. A strong signal will turn ON all 4 segments of the signal strength indicator bar.
2	The transmitting power indicator displays "L" during low RF power mode, and "H" during High high RF power mode.
3	The 2Tone or 5Tone mode icon (L) is displayed when the current selected channel has been programmed for 2Tone, 5Tone operation.
4	The VOX icon displays "VOX" when the VOX mode has been activated.
5	The Scrambler icon displays "SCR" when the scrambler function has been activated.
6	The Compander icon is displayed when the compander function has been activated.
7	The Alert icon displays "♫ " if the radio has been set to play alert tones. This icon will be OFF when alert tones have been deactivated.
8	The Lock icon displays when the keypad has been locked.
9	The Battery icon displays the capacity remaining in the battery using a 3-segment bar graph. A fully charged battery will display all three segments. Bar graph segments are progressively turned OFF as battery capacity is being consumed, with a flat battery being indicated by a battery icon with no bar graph segments. The battery indicator will blink when battery capacity is very low and the battery needs to be recharged.
10	The dot matrix displays 14 alphanumeric characters per line. LCD backlighting can be programmed to turn on when a button is pressed, after which it will remain on for the programmed length of time after the button has been released. Alternatively, LCD backlighting can also be programmed to always remain off.

IMPORTANT SAFETY WARNINGS

Accessory Warnings
Use only approved SIMOCO batteries.
SDP560 portable radio equipment is only to be connected to Simoco approved chargers and accessories.
Battery connection, disconnection, and charging must only be carried out in non-hazardous areas.
Metal belt clips must NOT be used in hazardous areas.
Approved accessories may only be connected and disconnected outside hazardous areas.

General Warnings:
Do NOT operate your radio in an explosive atmosphere
Do NOT operate the radio if the antenna has become disconnected or damaged.
Do NOT touch the antenna while the radio is transmitting.
Obey the 'Turn Off Two-way Radios' signs where these are posted, e.g. on a petrol station forecourt.
Do NOT operate your portable radio without a hands-free kit whilst driving a vehicle.
Do NOT use or store the battery above +60 °C.
Do NOT dispose of batteries in a fire.

FCC Statement

This equipment has been tested and found to comply with the limits for a Class B digital device, pursuant to part 15 of FCC Rules. These limits are designed to provide reasonable protection against harmful interference in a residential installation. This equipment generates and can radiate radio frequency energy. If not installed and used in accordance with the instructions, it may cause harmful interference to radio communications. However, there is no guarantee that interference will not occur in a particular installation. Verification of harmful interference by this equipment to radio or television reception can be determined by turning it off and then on. The user is encouraged to try to correct the interference by one or more of the following measures:

- Reorient or relocate the receiving antenna. Increase the separation between the equipment and receiver.
- Connect the equipment into an outlet on a different circuit to that of the receiver's outlet.
- Consult the dealer or an experienced radio/TV technician for help.

Operation is subject to the following two conditions:

- This device may not cause harmful interference.
- This device must accept any interference received, including interference that may cause undesired operation.

Note: Changes or modifications to this unit not expressly approved by the party responsible for compliance could void the user's authority to operate the equipment.

RF Exposure Compliance and Control Guidelines and Operating Instructions

To control your exposure and ensure compliance with the occupational/controlled environmental exposure limits, always adhere to the following procedures.

Guidelines:

- Do not remove the RF Exposure Label from the device.
- User awareness instructions should accompany device when transferred to other users.
- Do not use this device if the operational requirements described herein are not met.

Operating Instructions:

- Transmit no more than the rated duty factor of 50% of the time. To transmit (talk), push the Push-To-Talk (PTT) key. To receive calls, release the PTT key. Transmitting 50% of the time, or less, is important because the radio generates measurable RF energy only when transmitting (in terms of measuring for standards compliance).
- Keep the radio unit at least 2.5 cm away from the face. Keeping the radio at the proper distance is important as RF exposure decreases with distance from the antenna. The antenna should be kept away from the face and eyes.
- When worn on the body, always place the radio in a approved holder, holster, case, or body harness or by use of the correct clip for this product. Use of non-approved accessories may result in exposure levels which exceed the FCC's occupational/controlled environmental RF exposure limits.
- Use of non-approved antennas, batteries, and accessories causes the radio to exceed the FCC RF exposure guidelines.
- Contact your local dealer for the optional accessories of the product.

L'exposition aux champs rf de conformité et de contrôle d'orientations et instructions

Pour contrôler l'exposition et s'assurer de la conformité avec les limites d'exposition professionnelle / environnement contrôlé, toujours respecter les procédures suivantes.

Lignes directrices:

Ne pas enlever l'étiquette de l'appareil d'exposition aux radiofréquences.

Sensibilisation des utilisateurs instructions devraient accompagner dispositif lorsque transférés à d'autres utilisateurs.

Ne pas utiliser cet appareil si les exigences opérationnelles décrites ci - après ne sont pas remplies.

Les instructions de fonctionnement:

Transmettre non plus que le facteur d'utilisation nominal de 50% du temps.à transmettre (parler), pousse le pousse à parler (ptt). Pour recevoir des appels, les ptt.50% du temps de transmission, ou moins, est important parce que la radio génère de l'énergie rf seulement lors de la transmission des (en termes de mesure de la conformité aux normes).

Ie groupe de la radio continue d'au moins 2,5 cm de la surface.garde la radio à la bonne distance est important, car l'exposition aux champs rf diminue avec la distance de l'antenne.l'antenne doit se tenir loin du visage et des yeux.

Quand portés sur le corps, toujours place de la radio dans un étui, approuvé titulaire, ou un harnais ou par l'utilisation de la vidéo pour ce produit.utilisation des accessoires non approuvés peuvent entraîner des fac qui dépassent les niveaux d'exposition professionnelle et environnementale contrôlée des limites d'exposition aux rf.

Non approuvé des antennes, les piles et les accessoires causes la radio à dépasser les lignes directrices sur l'exposition aux radiofréquences de fac.

Communiquez avec votre distributeur local pour les accessoires facultatifs du produit.

ISEDC Statement

The device has been tested and complies with SAR limits, users can obtain Canadian information on RF exposure and compliance

Après examen de ce matériel aux conformité aux limites DAS, et/ou aux limites d’intensité de champ RF, les utilisateurs peuvent sur l’exposition aux radiofréquences et la conformité and compliance d’acquérir les informations correspondantes

For body worn operation, this device has been tested and meets the FCC/ISEDC/ RF exposure guidelines when used with an accessory designated for this product or when used with an accessory that Contains no metal.

Non-compliance with the above restrictions may result in violation of RF exposure guidelines.

Les tests SAR sont effectués en utilisant des positions de fonctionnement standard acceptées par la FCC/ISEDC avec l'appareil transmettant à son niveau de puissance certifié le plus élevé dans toutes les bandes de fréquences testées, bien que le SAR soit déterminé au niveau de puissance certifié le plus élevé, le niveau SAR réel de l'appareil tout en fonctionnement peut être bien en de?à de la valeur maximale.

Avant qu'un nouveau modèle d'appareil soit disponible à la vente au public, il doit être testé et certifié par la FCC/ISEDC qu'il ne dépasse pas la limite d'exposition établie par la FCC/ISEDC. Des tests pour chaque appareil sont effectués dans des positions et des emplacements (porté sur le corps) comme requis par la FCC/ISEDC.

Pour face vers le haut, 25 mm a été utilisé pour le test, cet équipement doit être installé et utilisé avec une distance minimale de 25 mm.

Pour un fonctionnement porté sur le corps, cet appareil a été testé et répond aux directives d'exposition RF FCC/ISEDC lorsqu'il est utilisé avec un accessoire con?u pour ce produit ou lorsqu'il est utilisé avec un accessoire qui ne contient pas de métal.

Le non-respect des restrictions ci-dessus peut entra?ner une violation des directives d'exposition aux RF.

SAR tests are conducted using standard operating positions accepted by the FCC/ISEDC with the device transmitting at its highest certified power level in all tested frequency bands, although the SAR is determined at the highest certified power level, the actual SAR level of the device while operating can be well below the maximum value.

Before a new model device is a available for sale to the public, it must be tested and certified to the FCC/ISEDC that it does not exceed the exposure limit established by the FCC/ISEDC, Tests for each device are performed in positions and locations (worn on the body)as required by the FCC/ISEDC.

For face-up, 25mm was used for test, this equipment should be installed and operated with minimum distance 25mm.