Test Lab: EMCTech Test File: M140624 PTT 450 MHz Body Worn FCC 01-07-14.da52:1

DUT Name: Simoco PTT transmitter, Type: SDP660 UW, Serial: 56KUW1415 05SL

Configuration: Holster (12mm Spacing)
Communication System: 0 - CW (0); Communication System Band: Simoco 450 MHz; Frequency: 440.1 MHz, Communication System PAR: 0.00 dB; PMF: 0.00; Duty Cycle: 1:1.00
Medium Parameters used: f=440 MHz; σ = 0.91 S/m; ε_r = 55.3; ρ = 1000.0g/cm^3
Phantom section: Flat Section

DASY Configuration:
Probe: ET3DV6 - SN1380; ConvF: (7.49,7.49,7.49); Calibrated: 13/12/2013;
Sensor-Surface: 4 mm (Mechanical Surface Detection)
Electronics: DAE3 Sn442; Calibrated: 10/12/2013
Phantom: ELI v4.0 (30deg probe tilt); Type: QDOVA001BB; Serial: TP:1101
DASY52 52.8.8(1222); SEMCAD X Version 14.6.10 (7331)

Holster (12mm Spacing)/Channel 1 Test/Area Scan (221x81x1): Interpolated grid: dx=1.5 mm, dy=1.5 mm; Maximum value of SAR (interpolated) = 8.120 W/kg
Holster (12mm Spacing)/Channel 1 Test/Zoom Scan (21x21x36)/Cube 0: Interpolated grid: dx=1.6 mm, dy=1.6 mm, dz=1.0 mm; Reference Value = 76.639 V/m; **Power Drift = -0.21 dB**
Averaged SAR: SAR(1g) = 7.030 W/kg; SAR(10g) = 4.780 W/kg
Maximum value of SAR (interpolated) = 11.600 W/kg

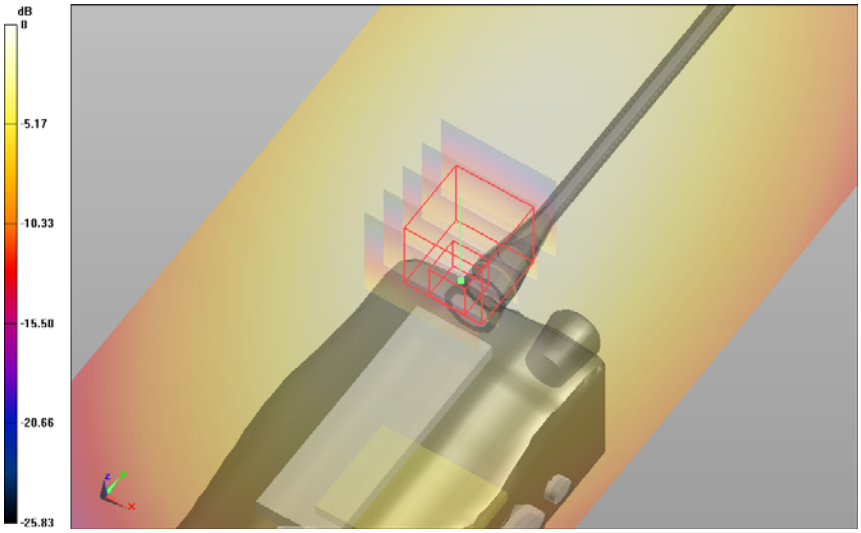

0 dB = 8.12 W/kg = 9.10 dBW/kg

SAR Measurement Plot 20

Accredited for compliance with ISO/IEC 17025. The results of the test, calibrations and/or measurement included in this document are traceable to Australian/national standards. NATA is a signatory to the ILAC Mutual Recognition Arrangement for the mutual recognition of the equivalence of testing, calibration and inspection reports.
This document shall not be reproduced except in full.

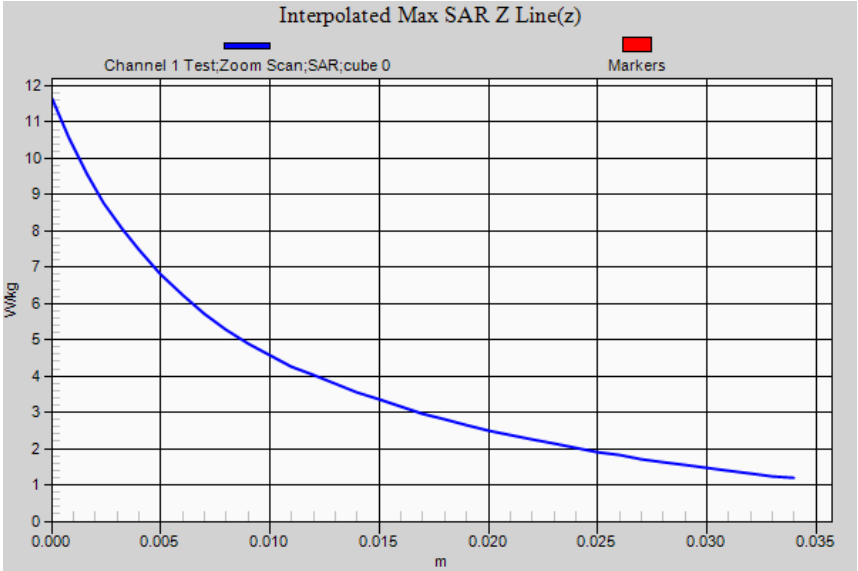

Accredited for compliance with ISO/IEC 17025. The results of the test, calibrations and/or measurement included in this document are traceable to Australian/national standards. NATA is a signatory to the ILAC Mutual Recognition Arrangement for the mutual recognition of the equivalence of testing, calibration and inspection reports.

This document shall not be reproduced except in full.

Test Lab: EMCTech Test File: M140624 PTT 450 MHz Body Worn FCC 01-07-14.da52:1

DUT Name: Simoco PTT transmitter, Type: SDP660 UW, Serial: 56KUW1415 05SL

Configuration: Holster (12mm Spacing)
Communication System: 0 - CW (0); Communication System Band: Simoco 450 MHz; Frequency: 458.0 MHz, Communication System PAR: 0.00 dB; PMF: 0.00; Duty Cycle: 1:1.00
Medium Parameters used: f=458 MHz; σ = 0.92 S/m; ε_r = 54.9; ρ = 1000.0g/cm^3
Phantom section: Flat Section

DASY Configuration:
Probe: ET3DV6 - SN1380; ConvF: (7.49,7.49,7.49); Calibrated: 13/12/2013;
Sensor-Surface: 4 mm (Mechanical Surface Detection)
Electronics: DAE3 Sn442; Calibrated: 10/12/2013
Phantom: ELI v4.0 (30deg probe tilt); Type: QDOVA001BB; Serial: TP:1101
DASY52 52.8.8(1222); SEMCAD X Version 14.6.10 (7331)

Holster (12mm Spacing)/Channel 2 Test/Area Scan (221x81x1): Interpolated grid: dx=1.5 mm, dy=1.5 mm; Maximum value of SAR (interpolated) = 9.640 W/kg
Holster (12mm Spacing)/Channel 2 Test/Zoom Scan (21x21x36)/Cube 0: Interpolated grid: dx=1.6 mm, dy=1.6 mm, dz=1.0 mm; Reference Value = 82.415 V/m; **Power Drift = -0.20 dB**
Averaged SAR: SAR(1g) = 8.870 W/kg; SAR(10g) = 6.070 W/kg
Maximum value of SAR (interpolated) = 14.300 W/kg

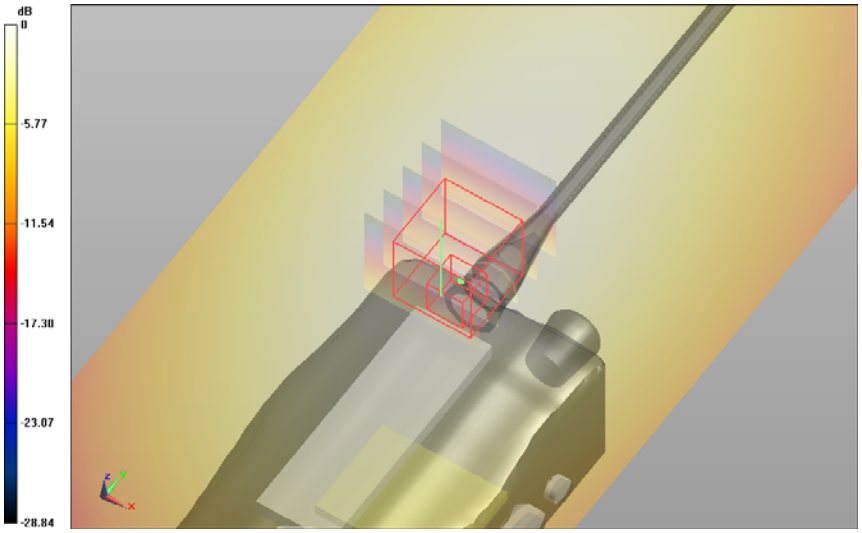

0 dB = 9.64 W/kg = 9.84 dBW/kg

SAR Measurement Plot 21

Accredited for compliance with ISO/IEC 17025. The results of the test, calibrations and/or measurement included in this document are traceable to Australian/national standards. NATA is a signatory to the ILAC Mutual Recognition Arrangement for the mutual recognition of the equivalence of testing, calibration and inspection reports.
This document shall not be reproduced except in full.

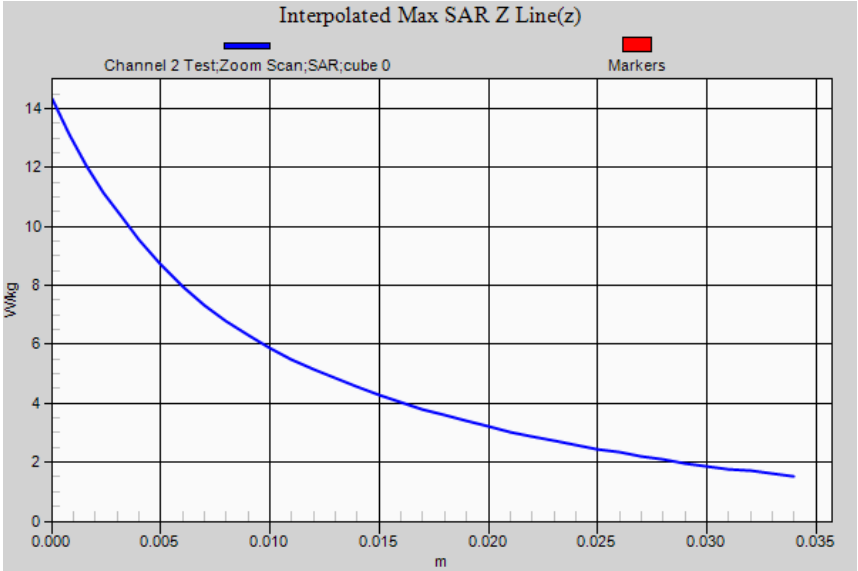

Accredited for compliance with ISO/IEC 17025. The results of the test, calibrations and/or measurement included in this document are traceable to Australian/national standards. NATA is a signatory to the ILAC Mutual Recognition Arrangement for the mutual recognition of the equivalence of testing, calibration and inspection reports.

This document shall not be reproduced except in full.

Test Lab: EMCTech Test File: M140624 PTT 450 MHz Body Worn FCC 01-07-14.da52:1

DUT Name: Simoco PTT transmitter, Type: SDP660 UW, Serial: 56KUW1415 05SL

Configuration: Holster (12mm Spacing)
Communication System: 0 - CW (0); Communication System Band: Simoco 450 MHz; Frequency: 476.0 MHz, Communication System PAR: 0.00 dB; PMF: 0.00; Duty Cycle: 1:1.00
Medium Parameters used: f=476 MHz; σ = 0.94 S/m; ε_r = 54.7; ρ = 1000.0g/cm^3
Phantom section: Flat Section

DASY Configuration:
Probe: ET3DV6 - SN1380; ConvF: (7.49,7.49,7.49); Calibrated: 13/12/2013;
Sensor-Surface: 4 mm (Mechanical Surface Detection)
Electronics: DAE3 Sn442; Calibrated: 10/12/2013
Phantom: ELI v4.0 (30deg probe tilt); Type: QDOVA001BB; Serial: TP:1101
DASY52 52.8.8(1222); SEMCAD X Version 14.6.10 (7331)

Holster (12mm Spacing)/Channel 3 Test/Area Scan (221x81x1): Interpolated grid: dx=1.5 mm, dy=1.5 mm; Maximum value of SAR (interpolated) = 7.750 W/kg
Holster (12mm Spacing)/Channel 3 Test/Zoom Scan (21x21x36)/Cube 0: Interpolated grid: dx=1.6 mm, dy=1.6 mm, dz=1.0 mm; Reference Value = 72.217 V/m; **Power Drift = -0.21 dB**
Averaged SAR: SAR(1g) = 7.270 W/kg; SAR(10g) = 4.890 W/kg
Maximum value of SAR (interpolated) = 11.900 W/kg

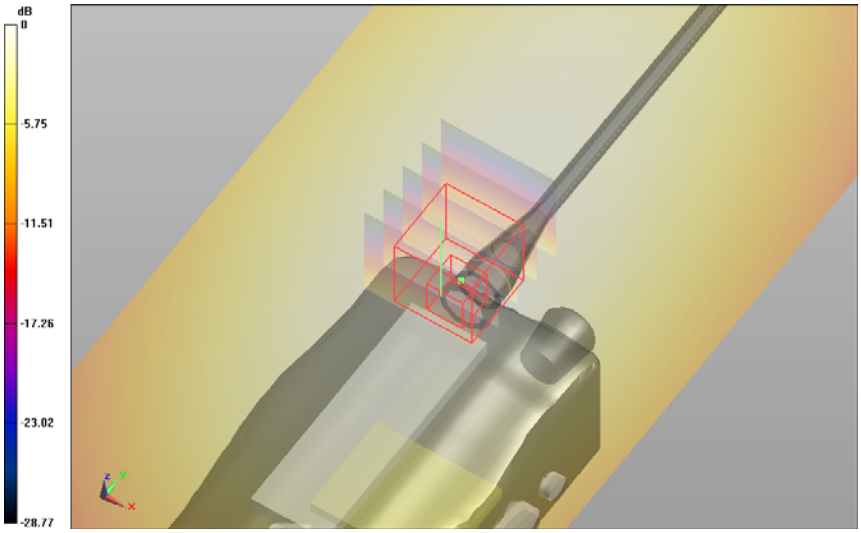

0 dB = 7.75 W/kg = 8.89 dBW/kg

SAR Measurement Plot 22

Accredited for compliance with ISO/IEC 17025. The results of the test, calibrations and/or measurement included in this document are traceable to Australian/national standards. NATA is a signatory to the ILAC Mutual Recognition Arrangement for the mutual recognition of the equivalence of testing, calibration and inspection reports.
This document shall not be reproduced except in full.

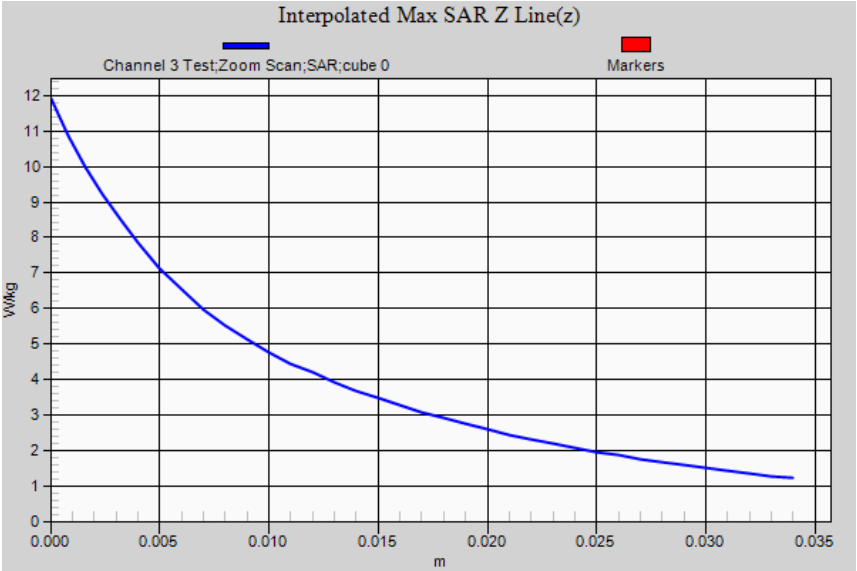

Accredited for compliance with ISO/IEC 17025. The results of the test, calibrations and/or measurement included in this document are traceable to Australian/national standards. NATA is a signatory to the ILAC Mutual Recognition Arrangement for the mutual recognition of the equivalence of testing, calibration and inspection reports.

This document shall not be reproduced except in full.

Test Lab: EMCTech Test File: M140624 PTT 450 MHz Body Worn FCC 01-07-14.da52:1

DUT Name: Simoco PTT transmitter, Type: SDP660 UW, Serial: 56KUW1415 05SL

Configuration: Holster (12mm Spacing)
Communication System: 0 - CW (0); Communication System Band: Simoco 450 MHz; Frequency: 494.0 MHz, Communication System PAR: 0.00 dB; PMF: 0.00; Duty Cycle: 1:1.00
Medium Parameters used: f=494 MHz; σ = 0.95 S/m; ε_r = 54.3; ρ = 1000.0g/cm^3
Phantom section: Flat Section

DASY Configuration:
Probe: ET3DV6 - SN1380; ConvF: (7.49,7.49,7.49); Calibrated: 13/12/2013;
Sensor-Surface: 4 mm (Mechanical Surface Detection)
Electronics: DAE3 Sn442; Calibrated: 10/12/2013
Phantom: ELI v4.0 (30deg probe tilt); Type: QDOVA001BB; Serial: TP:1101
DASY52 52.8.8(1222); SEMCAD X Version 14.6.10 (7331)

Holster (12mm Spacing)/Channel 4 Test/Area Scan (221x81x1): Interpolated grid: dx=1.5 mm, dy=1.5 mm; Maximum value of SAR (interpolated) = 7.190 W/kg
Holster (12mm Spacing)/Channel 4 Test/Zoom Scan (21x21x36)/Cube 0: Interpolated grid: dx=1.6 mm, dy=1.6 mm, dz=1.0 mm; Reference Value = 66.096 V/m; **Power Drift = -0.16 dB**
Averaged SAR: SAR(1g) = 7.400 W/kg; SAR(10g) = 4.790 W/kg
Maximum value of SAR (interpolated) = 12.900 W/kg

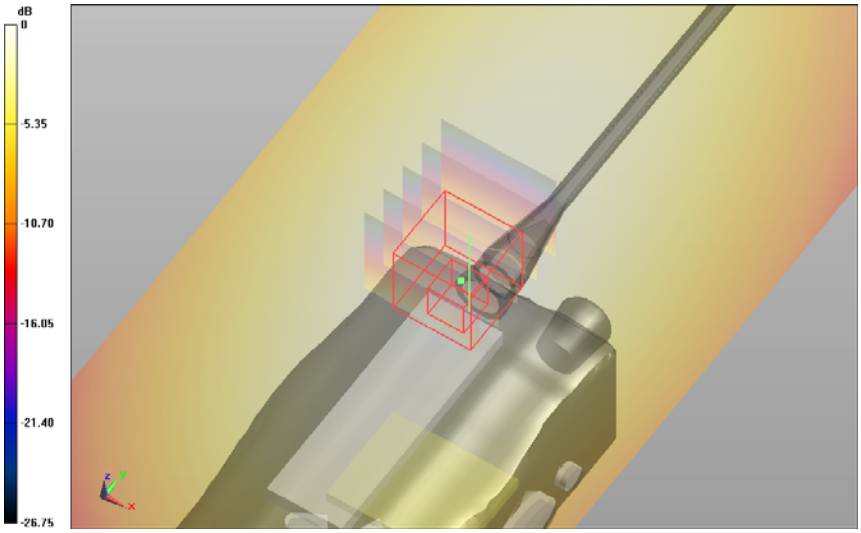

0 dB = 7.19 W/kg = 8.57 dBW/kg

SAR Measurement Plot 23

Accredited for compliance with ISO/IEC 17025. The results of the test, calibrations and/or measurement included in this document are traceable to Australian/national standards. NATA is a signatory to the ILAC Mutual Recognition Arrangement for the mutual recognition of the equivalence of testing, calibration and inspection reports.
This document shall not be reproduced except in full.

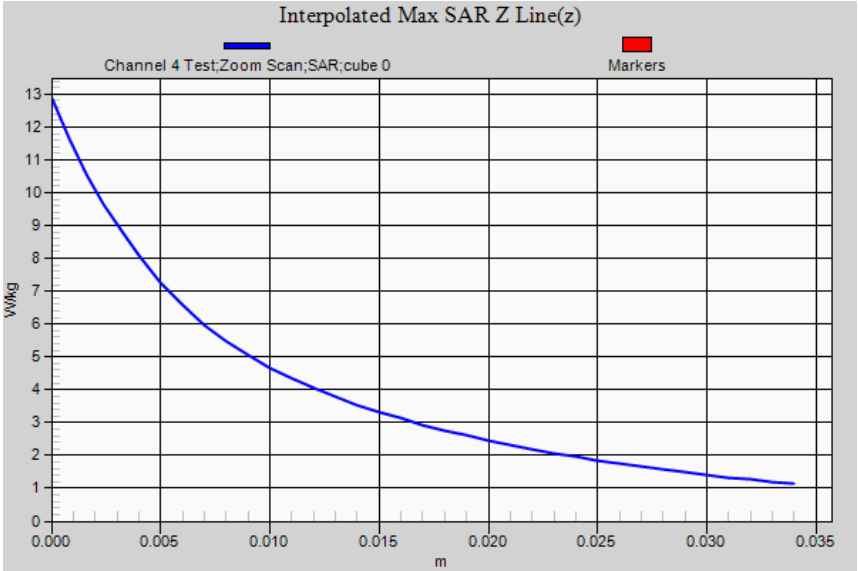

Accredited for compliance with ISO/IEC 17025. The results of the test, calibrations and/or measurement included in this document are traceable to Australian/national standards. NATA is a signatory to the ILAC Mutual Recognition Arrangement for the mutual recognition of the equivalence of testing, calibration and inspection reports.

This document shall not be reproduced except in full.

Test Lab: EMCTech Test File: M140624 PTT 450 MHz Body Worn FCC 01-07-14.da52:1

DUT Name: Simoco PTT transmitter, Type: SDP660 UW, Serial: 56KUW1415 05SL

Configuration: Holster (12mm Spacing)
Communication System: 0 - CW (0); Communication System Band: Simoco 450 MHz; Frequency: 511.9 MHz, Communication System PAR: 0.00 dB; PMF: 0.00; Duty Cycle: 1:1.00
Medium Parameters used: f=512 MHz; σ = 0.97 S/m; ε_r = 54.0; ρ = 1000.0g/cm^3
Phantom section: Flat Section

DASY Configuration:
Probe: ET3DV6 - SN1380; ConvF: (7.49,7.49,7.49); Calibrated: 13/12/2013;
Sensor-Surface: 4 mm (Mechanical Surface Detection)
Electronics: DAE3 Sn442; Calibrated: 10/12/2013
Phantom: ELI v4.0 (30deg probe tilt); Type: QDOVA001BB; Serial: TP:1101
DASY52 52.8.8(1222); SEMCAD X Version 14.6.10 (7331)

Holster (12mm Spacing)/Channel 5 Test/Area Scan (221x81x1): Interpolated grid: dx=1.5 mm, dy=1.5 mm; Maximum value of SAR (interpolated) = 6.720 W/kg
Holster (12mm Spacing)/Channel 5 Test/Zoom Scan (21x21x36)/Cube 0: Interpolated grid: dx=1.6 mm, dy=1.6 mm, dz=1.0 mm; Reference Value = 59.288 V/m; **Power Drift = -0.16 dB**
Averaged SAR: SAR(1g) = 6.320 W/kg; SAR(10g) = 4.050 W/kg
Maximum value of SAR (interpolated) = 11.100 W/kg

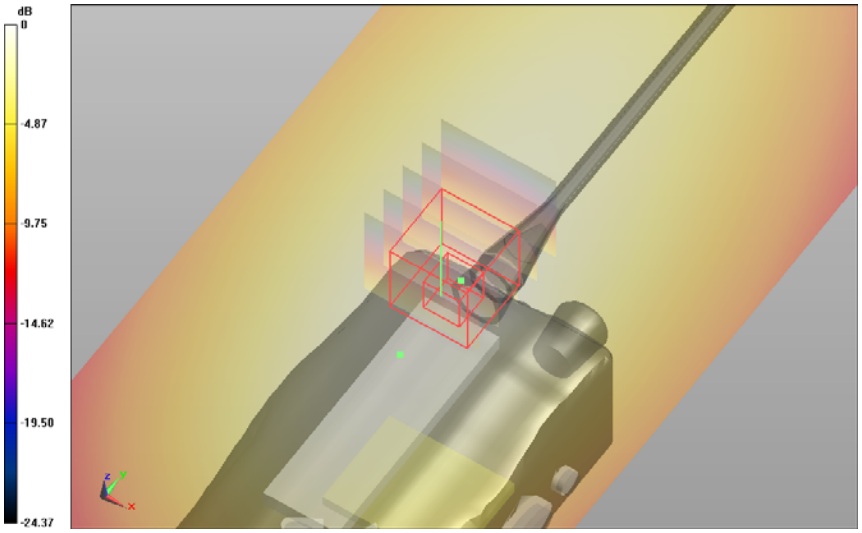

0 dB = 6.72 W/kg = 8.27 dBW/kg

SAR Measurement Plot 24

Accredited for compliance with ISO/IEC 17025. The results of the test, calibrations and/or measurement included in this document are traceable to Australian/national standards. NATA is a signatory to the ILAC Mutual Recognition Arrangement for the mutual recognition of the equivalence of testing, calibration and inspection reports.
This document shall not be reproduced except in full.

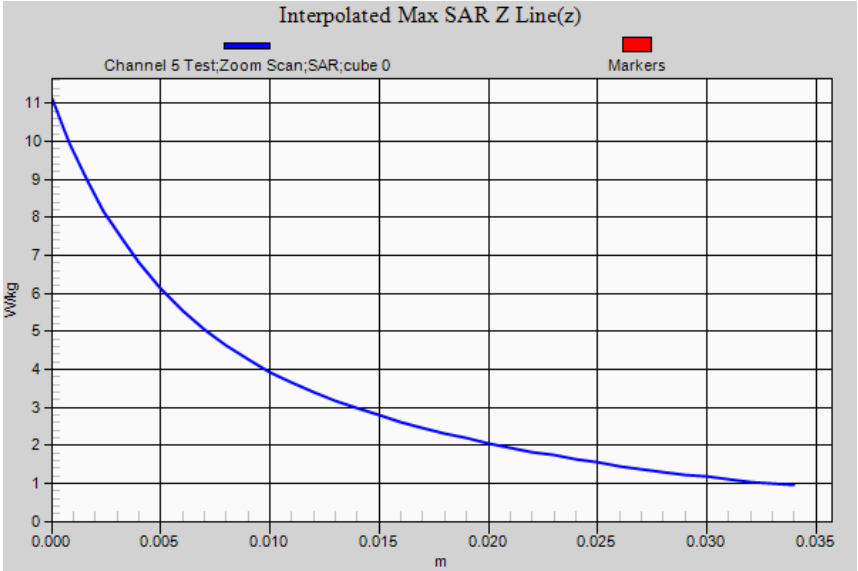

Accredited for compliance with ISO/IEC 17025. The results of the test, calibrations and/or measurement included in this document are traceable to Australian/national standards. NATA is a signatory to the ILAC Mutual Recognition Arrangement for the mutual recognition of the equivalence of testing, calibration and inspection reports.

This document shall not be reproduced except in full.

Test Lab: EMCTech Test File: M140624 PTT 450 MHz Body Worn FCC 01-07-14.da52:2

DUT Name: Simoco PTT transmitter, Type: SDP660 UW, Serial: 56KUW1415 05SL

Configuration: Holster (12mm Spacing) Alternative Audio Accessory PAR-9180LMW1
Communication System: 0 - CW (0); Communication System Band: Simoco 450 MHz; Frequency: 458.0 MHz, Communication System PAR: 0.00 dB; PMF: 0.00; Duty Cycle: 1:1.00
Medium Parameters used: f=458 MHz; σ = 0.92 S/m; ε_r = 54.9; ρ = 1000.0g/cm^3
Phantom section: Flat Section

DASY Configuration:
Probe: ET3DV6 - SN1380; ConvF: (7.49,7.49,7.49); Calibrated: 13/12/2013;
Sensor-Surface: 4 mm (Mechanical Surface Detection)
Electronics: DAE3 Sn442; Calibrated: 10/12/2013
Phantom: ELI v4.0 (30deg probe tilt); Type: QDOVA001BB; Serial: TP:1101
DASY52 52.8.8(1222); SEMCAD X Version 14.6.10 (7331)

Holster (12mm Spacing) Alternative Audio Accessory PAR-9180LMW1/Channel 2 Test/Area Scan (221x81x1): Interpolated grid: dx=1.5 mm, dy=1.5 mm; Maximum value of SAR (interpolated) = 10.200 W/kg
Holster (12mm Spacing) Alternative Audio Accessory PAR-9180LMW1/Channel 2 Test/Zoom Scan (21x21x36)/Cube 0: Interpolated grid: dx=1.6 mm, dy=1.6 mm, dz=1.0 mm; Reference Value = 80.583 V/m; **Power Drift = -0.19 dB**
Averaged SAR: SAR(1g) = 9.150 W/kg; SAR(10g) = 6.090 W/kg
Maximum value of SAR (interpolated) = 15.600 W/kg

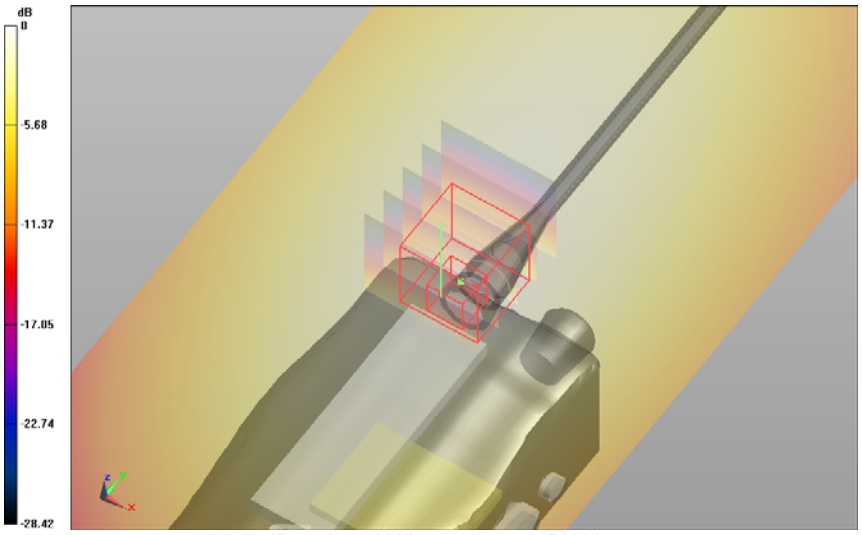

0 dB = 10.2 W/kg = 10.09 dBW/kg

SAR Measurement Plot 25

Accredited for compliance with ISO/IEC 17025. The results of the test, calibrations and/or measurement included in this document are traceable to Australian/national standards. NATA is a signatory to the ILAC Mutual Recognition Arrangement for the mutual recognition of the equivalence of testing, calibration and inspection reports.
This document shall not be reproduced except in full.

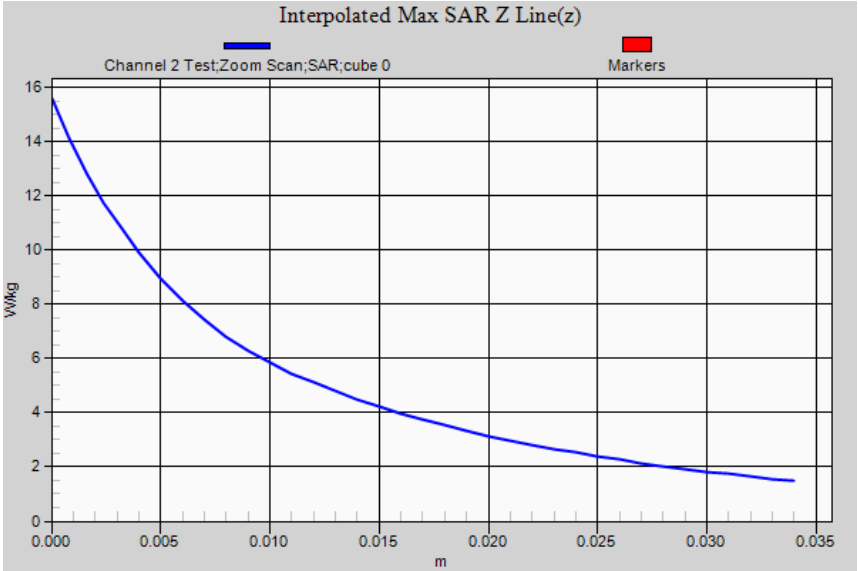

Accredited for compliance with ISO/IEC 17025. The results of the test, calibrations and/or measurement included in this document are traceable to Australian/national standards. NATA is a signatory to the ILAC Mutual Recognition Arrangement for the mutual recognition of the equivalence of testing, calibration and inspection reports.

This document shall not be reproduced except in full.

Test Lab: EMCTech Test File: M140624 PTT 450 MHz Body Worn FCC 01-07-14.da52:3

DUT Name: Simoco PTT transmitter, Type: SDP660 UW, Serial: 56KUW1415 05SL

Configuration: Holster (12mm Spacing) Alternative Audio Accessory PAR-600LMS4
Communication System: 0 - CW (0); Communication System Band: Simoco 450 MHz; Frequency: 458.0 MHz, Communication System PAR: 0.00 dB; PMF: 0.00; Duty Cycle: 1:1.00
Medium Parameters used: f=458 MHz; σ = 0.92 S/m; ε_r = 54.9; ρ = 1000.0g/cm^3
Phantom section: Flat Section

DASY Configuration:
Probe: ET3DV6 - SN1380; ConvF: (7.49,7.49,7.49); Calibrated: 13/12/2013;
Sensor-Surface: 4 mm (Mechanical Surface Detection)
Electronics: DAE3 Sn442; Calibrated: 10/12/2013
Phantom: ELI v4.0 (30deg probe tilt); Type: QDOVA001BB; Serial: TP:1101
DASY52 52.8.8(1222); SEMCAD X Version 14.6.10 (7331)

Holster (12mm Spacing) Alternative Audio Accessory PAR-600LMS4/Channel 2 Test/Area Scan (221x81x1): Interpolated grid: dx=1.5 mm, dy=1.5 mm; Maximum value of SAR (interpolated) = 10.400 W/kg
Holster (12mm Spacing) Alternative Audio Accessory PAR-600LMS4/Channel 2 Test/Zoom Scan (21x21x36)/Cube 0: Interpolated grid: dx=1.6 mm, dy=1.6 mm, dz=1.0 mm; Reference Value = 81.254 V/m; **Power Drift = -0.16 dB**
Averaged SAR: SAR(1g) = 9.400 W/kg; SAR(10g) = 6.290 W/kg
Maximum value of SAR (interpolated) = 15.800 W/kg

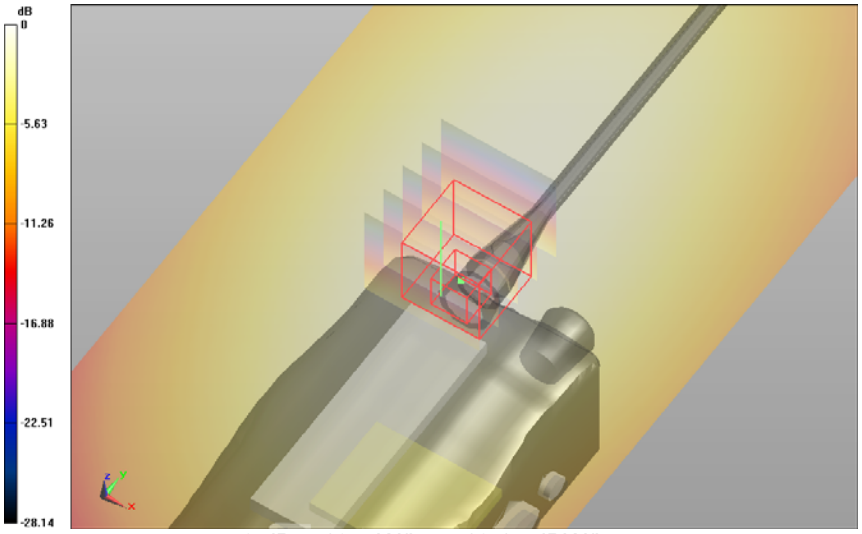

0 dB = 10.4 W/kg = 10.17 dBW/kg

SAR Measurement Plot 26

Accredited for compliance with ISO/IEC 17025. The results of the test, calibrations and/or measurement included in this document are traceable to Australian/national standards. NATA is a signatory to the ILAC Mutual Recognition Arrangement for the mutual recognition of the equivalence of testing, calibration and inspection reports.
This document shall not be reproduced except in full.

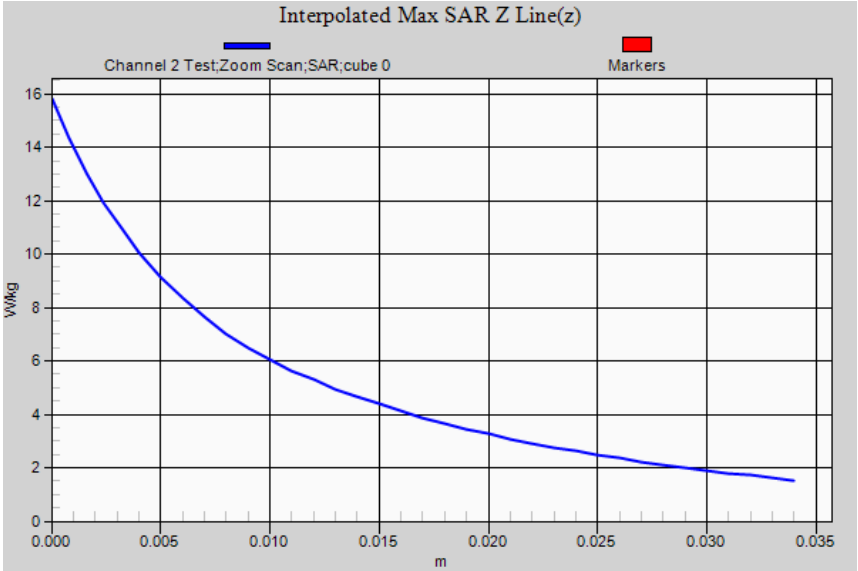

Accredited for compliance with ISO/IEC 17025. The results of the test, calibrations and/or measurement included in this document are traceable to Australian/national standards. NATA is a signatory to the ILAC Mutual Recognition Arrangement for the mutual recognition of the equivalence of testing, calibration and inspection reports.

This document shall not be reproduced except in full.

Test Lab: EMCTech Test File: M140624 PTT 450 MHz Body Worn FCC 01-07-14.da52:4

DUT Name: Dipole 450 MHz, Type: D450V3, Serial: 1074

Configuration: System Check
Communication System: 0 - CW 450 MHz; Communication System Band: **450 MHz**; Frequency: 450.0 MHz, Communication System PAR: 0.00 dB; PMF: 1.00; Duty Cycle: 1:1.00
Medium Parameters used: f=450 MHz; σ = 0.91 S/m; ε_r = 55.1; ρ = 1000.0g/cm^3
Phantom section: Flat Section

DASY Configuration:
Probe: ET3DV6 - SN1380; ConvF: (7.49,7.49,7.49); Calibrated: 13/12/2013;
Sensor-Surface: 4 mm (Mechanical Surface Detection)
Electronics: DAE3 Sn442; Calibrated: 10/12/2013
Phantom: ELI v4.0 (30deg probe tilt); Type: QDOVA001BB; Serial: TP:1101
DASY52 52.8.8(1222); SEMCAD X Version 14.6.10 (7331)

System Check/Channel 1Test/Area Scan (51x121x1): Interpolated grid: dx=1.5 mm, dy=1.5 mm;
Maximum value of SAR (interpolated) = 1.970 W/kg
System Check/Channel 1Test/Zoom Scan (31x31x36)/Cube 0: Interpolated grid: dx=1.0 mm, dy=1.0 mm, dz=1.0 mm; Reference Value = 48.215 V/m; **Power Drift = -0.02 dB**
Averaged SAR: SAR(1g) = 1.890 W/kg; SAR(10g) = 1.190 W/kg
Maximum value of SAR (interpolated) = 3.240 W/kg

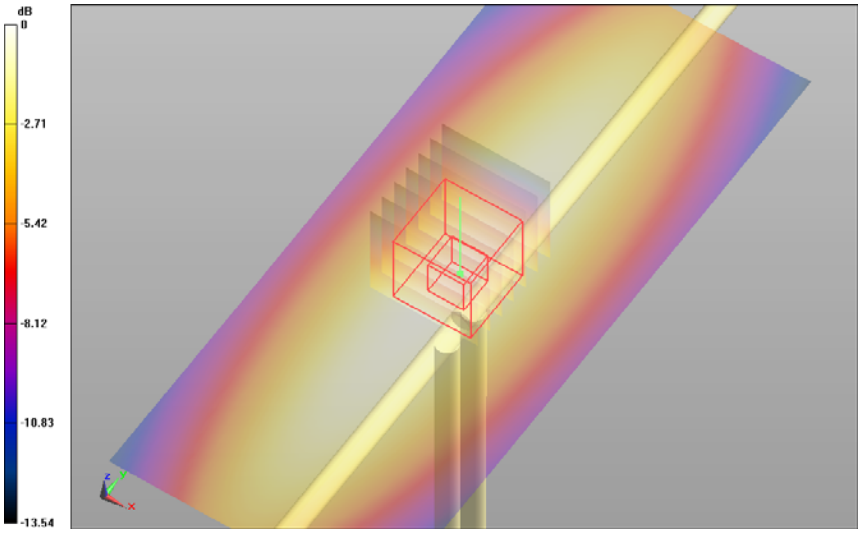

0 dB = 1.97 W/kg = 2.94 dBW/kg

SAR Measurement Plot 27

Accredited for compliance with ISO/IEC 17025. The results of the test, calibrations and/or measurement included in this document are traceable to Australian/national standards. NATA is a signatory to the ILAC Mutual Recognition Arrangement for the mutual recognition of the equivalence of testing, calibration and inspection reports.
This document shall not be reproduced except in full.

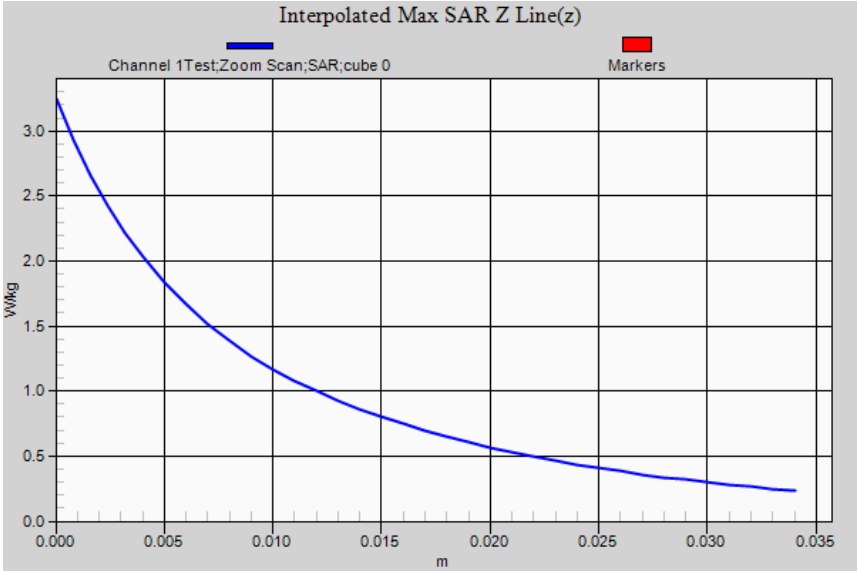

Accredited for compliance with ISO/IEC 17025. The results of the test, calibrations and/or measurement included in this document are traceable to Australian/national standards. NATA is a signatory to the ILAC Mutual Recognition Arrangement for the mutual recognition of the equivalence of testing, calibration and inspection reports.

This document shall not be reproduced except in full.