YuHua Omega-1 User Manual

Yuhua EMP Platform

Release Date: 2006-07-18 Version: 1.0

Project Name	**Omega-1**
Project Number	**OM1**
Document Version	**V 1.0**
Date	**2006-07-18**

All rights are reserved. Reproduction in whole or in parts is prohibited without the written consent of the copyright owner.

Disclaimer

Registered and un-registered company names or trademarks belong to YuHua TelTech (Shanghai) Co., Ltd and their owners.

Contents in this Manual are provided according to actual conditions. Unless otherwise regulated in applicable laws, **YuHua TelTech (Shanghai)** does not make any explicit or implicit guarantee of any type for the accuracy and reliability of the Manual contents, including but not limited to the guarantee for the merchantability and practicability.

Under no circumstances, YuHua TelTech (Shanghai) is to take any responsibility for the loss of data or revenue, or for any direct or indirect damage caused by any specific incident or accident.

Discrepancies between contents described in the Manual and actual product are subject to the latter.

The right of YuHua TelTech (Shanghai) to make changes and improvements to or recall this User Manual without prior notice is reserved.

YuHua TelTech (Shanghai) reserves the right of final explanation of this Manual.

All rights are reserved. Reproduction in whole or in parts is prohibited without the written consent of the copyright owner.

Table of Contents

For Your Safety 5
Quick Start 6
Your Phone 6
Menu structure 7
Computer Software Copyright Statement 7
Battery use 8
Installing the SIM card 9
Charging the battery 10
Low battery warning 11
Cautions about battery 11
Switching your phone on/off 11
Making/answering a call 11
Maintenance and protection of your phone 13
Highlighted Features 14
Taking photos or recording videos 14
Multimedia 18
Voice Recorder 21
Documents management 22
Name card recognition 22
Image Processing 22
Mobile USB Flash Drive Feature 24
Wireless Connection via Bluetooth 24
Basic Use of the Phone 29
How to calibrate the touch screen 29
Introduction of Icons on the Top of the Screen 29
How to Use Shortcuts in Standby Mode 30
Use Handsfree Function 30
Input Methods 30
Barcode Label 32
Codes 32
Lock and Unlock the Phone 32
Setting up your phone 33
Basic setup 33
Setting the sound 34
Profile 34
Security setup 34
Screen setup 35
Network setup 36

All rights are reserved. Reproduction in whole or in parts is prohibited without the written consent of the copyright owner.

Flying mode 37
How to use your Address Book 38
Communication Features 39
Calling Features 39
Messaging Features 41
Mobile Working 46
Calendar 46
Note Pad 46
Alarm Clock 47
Calculator 47
Chinese-English Dictionary 47
Stopwatch 47
Timer 47
World Clock 47
Data connection 48
Entertainment Function 49
Web Browser 49
STK 50
Answers for inquiries 51
Original manufacturer's accessories that can be selected to purchase 51
Battery 51
Fast portable charger 52
Data line 52

All rights are reserved. Reproduction in whole or in parts is prohibited without the written consent of the copyright owner.

For Your Safety

Safe Switch On Do not switch the phone on when wireless phone use is prohibited or when it may cause interference or danger.

Switch Off in Hospitals Follow any regulations or rules. Switch phone off near medical equipment.

Switch Off When filling the gas Don't use phone at a gas station. Don't use near fuel or chemicals.

Switch Off On Aircraft Follow any regulations or rules. Wireless phones can cause interference.

Road Safety Comes First Don't use a hand-held phone while driving; park the vehicle first.

Accessories and Batteries Use only approved accessories and batteries. Do not connect with incompatible products.

Backup Copies Remember to made backup copies of all important data.

Connecting to Other Devices When connecting to any other device, read its user's guide for detailed safety instructions. Do not connect to incompatible products.

Qualified Service Only qualified personnel may install or repair phone equipment.

Water-Resistance Your phone is not water-resistant. Keep it dry.

Interference All wireless phones may get interference, which could affect performance.

SAR The highest SAR value for this model phone when tested is 0.908W/Kg for use at the RH-TouchCheek_T and 0.220W/kg for use close to the body. For body worn operation, this phone has been tested and meets FCC RF exposure guidelines when used with an accessory that contains no metal and that positions the handset a minimum of 1.5cm from the body. Use of other accessories may not ensure compliance with FCC RF exposure guidelines.

All rights are reserved. Reproduction in whole or in parts is prohibited without the written consent of the copyright owner.

Any damage to the tamper resistant label will render your warranty invalid.

Quick Start

Your Phone

All rights are reserved. Reproduction in whole or in parts is prohibited without the written consent of the copyright owner.

Menu structure

(1)Communication	(2)Multimedia	(3)Mobile Office	(4) Set up	(5)Game
Text message	Digital camera	Calendar	Setting up your phone	Java manager
Multimedia message	Digital camcorder	Note pad	Sound	Certificate manager
Address book	Audio player	Alarm clock	Profile	Sync ML
Viewing recent calls	Voice recorder	Calculator	Security	
Emails	Video player	Chinese-English dictionary	Call Settings	
WEB browser	Image browser	Stopwatch	Date and time	
STK	Image editor	Timer	Screen	
Namecard recognition	Media folder	World clock	Network	
	Bluetooth	Data communication	Flying mode	
			Programme manager	

Computer Software Copyright Statement

The products described in this manual may include third-party software stored in semiconductor memories or other media. Any such copyrighted software may not be modified, reverse-engineered, distributed, or reproduced in any manner to the extent allowed by law. Furthermore, the purchase of our company's products shall not be deemed to be granted either directly or by implication, estoppels, or otherwise, any license under the copyrights patents, or patent applications of YuHua Company or any third-party software provider, except for the normal, non-exclusive, royalty-free license to use that arises by operation of law in the sale of a product.

All rights are reserved. Reproduction in whole or in parts is prohibited without the written consent of the copyright owner.

Battery use

Installing and uninstalling the battery

Put your phone upside down as shown. Press the battery door latch of the phone and slide the cover rightward, then lift the parts with protuberances on both sides of the cover and lift the battery.

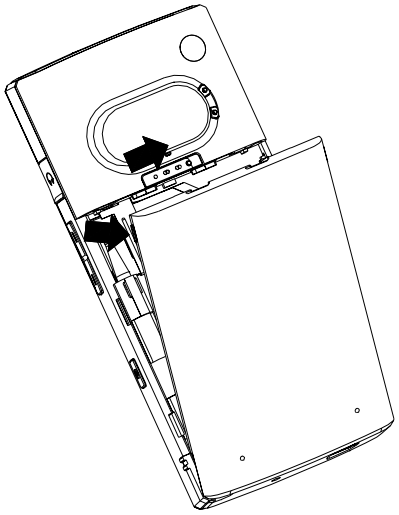

Installing the battery

Point the metal side of the battery at the metal contact point in the battery holder as shown, and insert the battery into the battery holder. Slide the battery door until the battery clicks.

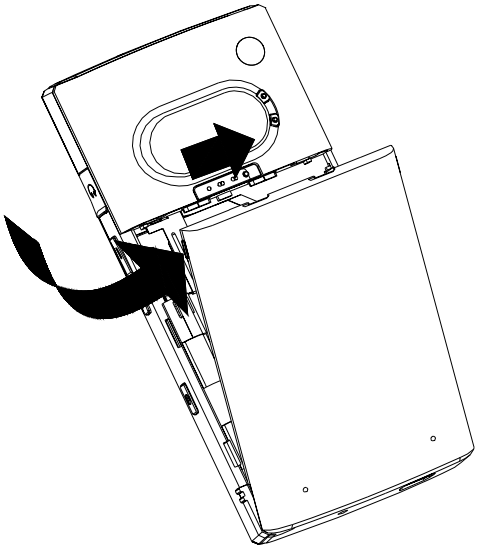

All rights are reserved. Reproduction in whole or in parts is prohibited without the written consent of the copyright owner.

Installing the SIM card

Warning: Do not bend, scratch or immerse your SIM card; avoid exposing your SIM card to static electricity or dirt.

Open the battery door and lift the battery off your phone, then slide the SIM card into the SIM card holder with the metal face downwards, noting the orientation of the cut corner.

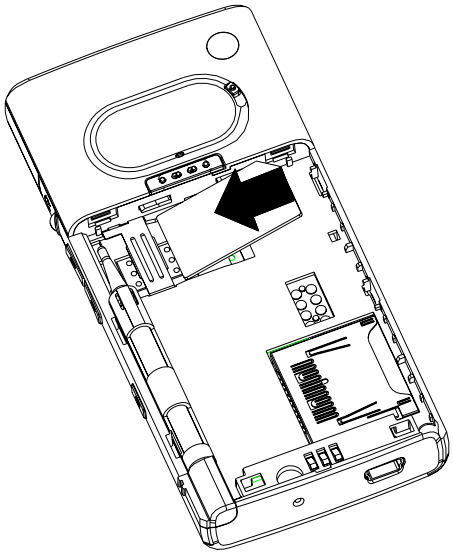

Installing the Memory

1. Find the memory card slot on one side of the phone and insert the memory card into the fixed slot, posing the metal magnetic strip as shown.

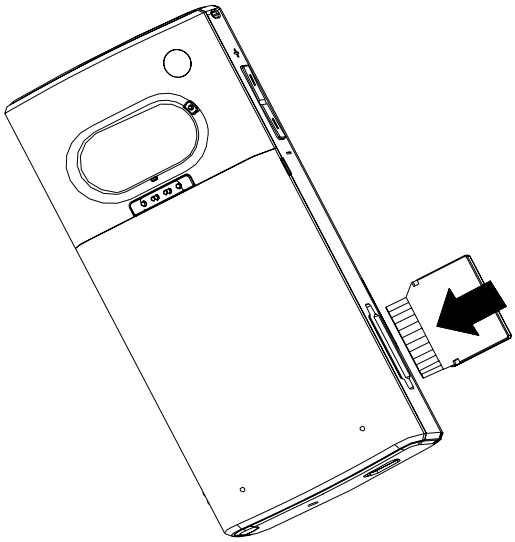

All rights are reserved. Reproduction in whole or in parts is prohibited without the written consent of the copyright owner.

2.Find the memory card slot on one side of the phone and press the upper part of the memory card, then the memory card will eject automatically.

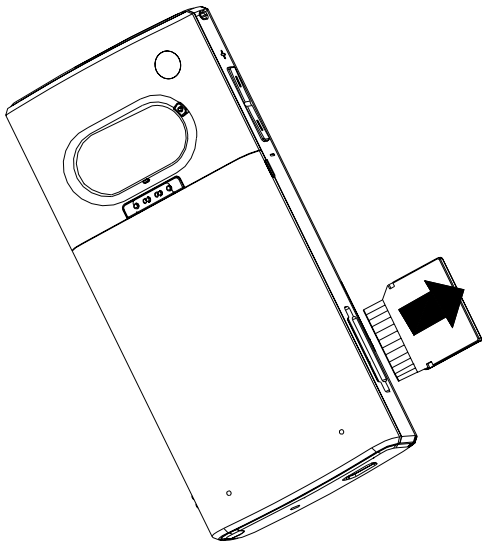

Caution: Please use FAT12 or FAT16 to format your memory card. The phone will not correctly recognize and read data on memory card using NTFS, FAT32.

Charging the battery

Warning: To avoid serious burns or damages of the battery circuit, do not move or uninstall the battery when the battery is charging.

Before using your phone, you need to charge the battery as described below. Please charge the battery for 12 consecutive hours to ensure that the new battery is charged fully. Best performance of the battery could be achieved after several charging and discharging processes.

1. Before using your phone, be sure to make certain that the battery has been properly installed into the phone.
2. Plug the charger into the connector on bottom of the phone.
3. Plug the AC adaptor of the charger into appropriate electrical outlet.

Caution:

1. If your phone is power off when the battery is charging, the screen will display a charge animation.
2. If the phone is power on, you can use your phone as the battery is charging.
3. Batteries that have been stored for a long time would, due to low battery charge, make the phone display a black screen when charging, and it would take up to several minutes for your phone to provide a visible indication that the battery is charging.
4. You may also charge your battery by connecting the phone to computer with a data cable, which would, compared with AC charging, take longer time.

All rights are reserved. Reproduction in whole or in parts is prohibited without the written consent of the copyright owner.

Low battery warning

If the battery charge is low, your phone will indicate this information to you and you should charge your battery. If the battery charge is lower than the minimum limit, the phone will power off automatically.

When the battery charge is low, back light of the screen may not shine when you tap the keypad and some functions of the phone may fail. You need charge the battery immediately under this condition.

Cautions about battery

- Use only batteries, data cables and chargers approved by YuHua Company for use with this particular model. The use of any other type of data cable or charger may cause burns or damages to the battery.
- To prevent damages or burns, do not short-circuit the battery. When you do not intend to use a battery for a while, store it in battery box.
- Do not expose the battery to or charge the battery in temperatures of too high or too low, which will tamper the performances of the battery.
- To avoid dangers, never keep the battery or battery charger near a fire.
- Keep the battery box and battery charger in places where children could not reach.
- Keep the metal contact of the battery clean. Dirt on the metal contact would affect the charging of the battery.
- Batteries gradually wear down with repeating use and charge. If your battery's performance is less than 50% of that of new battery, then it is probably time to purchase a new battery.

Switching your phone on/off

Switching your phone on

1. Press and hold the **Power & End key** for 2 seconds to turn the phone on. The phone will then display a welcome image and then screen saver.
2. If necessary, enter your PIN code (****will be displayed when you enter).
3. For more information about your PIN code, please refer to Setup/Security (P33).

Switching your phone off

Press and hold the **Power & End** key for 2 seconds to turn the phone off, and the screen image will disappear.

Making/answering a call

Making a call

Making a call with the use of the touchscreen

1. Tap on top of the screen to switch on the dialing keypad as shown.

All rights are reserved. Reproduction in whole or in parts is prohibited without the written consent of the copyright owner.

2. Tap the **Digit keys** to enter your phone number.
3. Tap to make a call.
4. Tap to end a call.

Making a call with the use of the keypad

1. Enter your phone number with digit keypad. To modify the phone number, tap the **Navigation Key** to move the cursor and tap the **Right Soft Key** to erase characters in left of the cursor.
2. Tap **Send Key** to make the call.
3. Tap the **Power & End Key** to end a call.
4. To dial international numbers, tap the **0 Key** for a while until "+" is displaced (international access code). Then enter country code, area code and phone numbers in turn, and tap the **Send Key** to make a call.

Caution: 1 Tap the **Send Key** and recent calls could be directly viewed.

2 When dialing with digit keypad, contents of the address book stored in the phone will be displayed on bottom of the screen, and you can check for needed phone numbers using the **Navigation Key** and dial directly.

Answering a call

Answering a call using touchscreen

When you receive a call, your phone rings and/or vibrates and displays an incoming call message.

1 Tap Answer on the screen to answer the call.

2 Tap Refuse on the screen to end the call.

Answering a call using keypad

1 Tap the **Send Key** to answer the call.

2 Tap the **Power & End Key** to refuse the call.

All rights are reserved. Reproduction in whole or in parts is prohibited without the written consent of the copyright owner.

Maintenance and protection of your phone

Following suggestions will help you to better use and maintain your phone.

1. Keep your phone and all its accessories in places where children could not reach.
2. Keep your phone dry. It's very possible that rain, humid air and liquids or moistures of various kinds may contain minerals which could erode the phone circuits.
3. Do not store or use your phone in places with dusts and dirt, in which conditions active components of the phone will be possibly injured.
4. Do not store your phone in places with high temperature, which could shorten the life of the electrical device, injure the battery and deform or melt some plastic components.
5. Do not store your phone in low temperature. When the phone is moved from places of low temperature to normal temperature, moistures may arise inside the phone and damage the circuit board.
6. Do not use excitant chemicals and cleanser or corrosive cleanser to clean your phone; you shall, instead, use cloth dipped with soft suds to gently wipe the phone.
7. Do not dye your phone with paints, which may possibly affect the active components and normal operation of your phone.
8. Do not allow metal objects, except for original charger connector and data cable connector, to contact and short-circuit the charger connector.
9. Use the original or qualified set of earphone only.
10. If your phone is wet, take the battery off your phone first. Note that no operations of switching on/off your phone should be conducted, otherwise the main board of your phone may be burned and damaged.
11. By decreasing the volume and screen brightness, as well as shortening the lighting time of backlights of screen and keypad, you can increase the use time of your battery.

All rights are reserved. Reproduction in whole or in parts is prohibited without the written consent of the copyright owner.

Highlighted Features

Taking photos or recording videos

The camera within this product have been tested and found to comply with the limits for a Class A digital device, pursuant to Part 15 of the FCC Rules. These limits are designed to provide reasonable protection against harmful interference when the equipment is operated in a commercial environment. This equipment generates, uses, and can radiate radio frequency energy and, if not installed and used in accordance with the instruction manual, may cause harmful interference to radio communications. Operation of this equipment in a residential area is likely to cause harmful interference in which case the user will be required to correct the interference at his own expense.

Entering/exiting photo and video mode

1. Press the **Camera Key** for a while to activate the camera. Press the **Camera Key** or **OK Key** again to take a photo. In standby mode, tap the **Left Soft Key** to enter the main menu, then tap the **Navigation Key** to select Multimedia>Digital Camera. You may also enter with the help of **Auxiliary Pen**.

2. In photo mode, press the **Camera Key** for a while again to enter camcorder. Tap the **Camera Key** or **OK Key** to start recording a video. Tap the **Camera Key** or **OK Key** again to stop video recording.
In standby mode, tap the **Left Soft Key** to enter the main menu, then tap the **Navigation Key** to select Multimedia>Digital Camcorder. You may also enter with the help of **Auxiliary Pen**.

3. Tap the **Right Soft Key** or tap to exit the photo or video mode and return to standby mode.

Micro adjusting

For nearer photo subject, micro adjusting function may be used in photographing or video recording. Lift the Micro **Adjusting Key** on left side of the camera lens to activate this function.

Taking a photo

In photo mode, point the camera lens at the photo subject and then, if necessary, tap the upper and down **Navigation Key** to adjust the photo size, or to tap the left or right **Navigation Key** to adjust the brightness of the photo.

All rights are reserved. Reproduction in whole or in parts is prohibited without the written consent of the copyright owner.

Tap the **Camera Key** or **OK Key** to take a photo, and the photos will be automatically stored in Image Browser.

Caution: Default setting of the photo mode is shake-hand grip framing. Tap the rotary icon （ ）on the upper left corner of the screen to frame vertically or reelingly.

In video mode, tap to switch the phone from video mode to photo mode .

Recording a video

In video mode, point the camera lens at the photo subject and then, if necessary, tap the left or right **Navigation Key** to adjust the brightness of the video. Tap the **Camera Key** or **OK Key** to record a video. Tap the **OK Key** or **Camera Key** once again to end the video recording and the video will be automatically stored in Mediafolder>Video.

Caution: Default setting of the video mode is shake-hand grip framing. Tap the rotary icon （ ）on the upper left corner of the screen to frame vertically or reelingly.

In photo mode, tap the on the screen to switch the phone from photo mode to video mode .

Setup options

In video mode, tap the **Left Soft Key** or tap any viewfinding area of the screen to display the Setup Options menu. Tap the **Left Soft Key** or any viewfinding area of the screen once again to close the Setup Options menu.

In photo mode:

All rights are reserved. Reproduction in whole or in parts is prohibited without the written consent of the copyright owner.

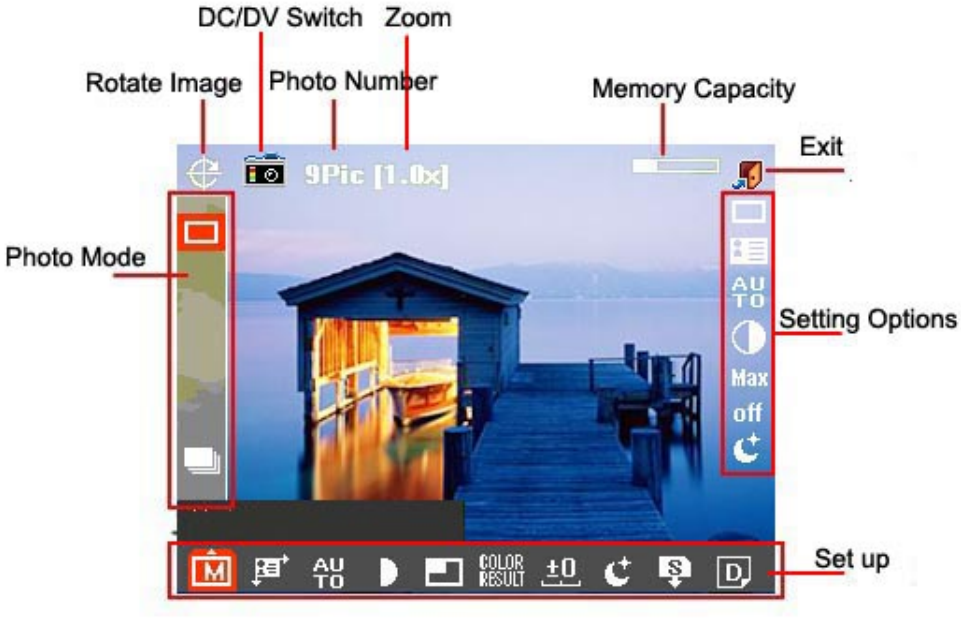

In video mode:

All rights are reserved. Reproduction in whole or in parts is prohibited without the written consent of the copyright owner.

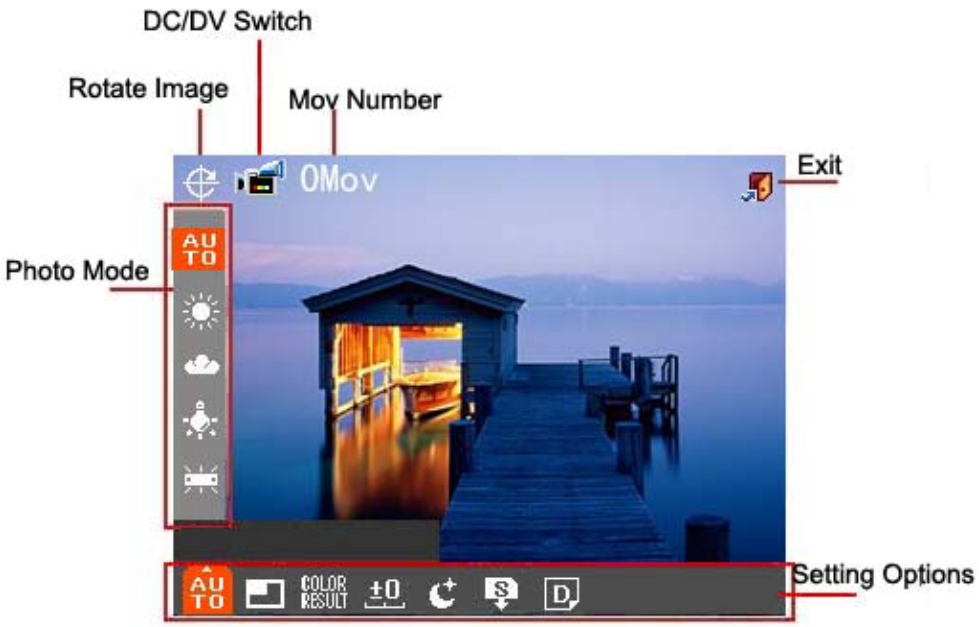

You can set the following options:

Photo setting	
Option	**Description**
M	Set the camera to take single picture or take pictures in a sequence
AU TO	Select the White Balance as Auto, Outdoor, Cloudy, Incandescence Lamp, or Daylight Lamp.
	Select the image quality as Basic, Normal or High.
	Select the picture sizes as 176*144, 320*240, 640*480 or 1280*960.
COLOR RESULT	Select the color result as Off, Natural, Vivid, Old Photo, Cold Color, Invert Color or Black and White.
±0	Exposal index -2、-1、0、1、2.
	Switching the night mode on/off.

All rights are reserved. Reproduction in whole or in parts is prohibited without the written consent of the copyright owner.

	Save to your phone or SD card.
	Hidden setup options.

Caution： In photo mode, you may use the **Navigation Key** or **Volume Key + Song Key** to select and setup the above options.

Previewing a photo or video

In the digital camera viewfinding interface, tap the upper **Volume Key** to go into Image Browser; tap once again to return to the camera viewfinding interface. You can switch between the two interfaces by tapping the **Volume Key** once and again.

In the camcorder video framing interface, tap the upper **Volume Key** to go into Video Player; tap once again to return to the camcorder video viewfinding interface. You may switch between the two interfaces by tapping the **Volume Key** once and again.

How to view the image and video

1. In standby mode, tap or select to go into Multimedia>Image Browser.
2. After entering the menu by tapping or selecting, display all image documents stored in your phone in thumbnail mode. You may conduct more operations to the images by tapping the **Left Soft Key** when browsing.
3. In standby mode, tap the **Left Soft Key** to enter into the menu, then tap the **Navigation Key** to select Multimedia>Media Folder. The pictures and videos previously taken are stored in corresponding root directions, and your may check them by tapping or selecting to enter into Image or Video folders.

Caution：**In the Image Browser Thumbnail interface, you can tap on the upper right of the screen to switch the document display mode.**

After entering from the Image Browser, you may edit, zoom or frame the selected picture, or to set the picture as wall paper. If you enter from Multimedia>Media Folder to view the pictures, you can only open, cut and paste the pictures.

Multimedia

Note：

1. Use of Multimedia player would consume more power.
2. When playing multi-media documents, you'd better use stereo earphone to get better sound effect.
3. If the phone is in mute mode, earphone should be connected with the phone to activate audio and video playing function of the phone.

All rights are reserved. Reproduction in whole or in parts is prohibited without the written consent of the copyright owner.

Audio playing

Entering/exiting the Audio Player

Shortcut: In standby mode, tap on the top of the screen to enter Audio Player.

1. In standby mode, tap or select to go into Multimedia>Audio Player.
2. In the Audio Player, tap the Left Soft Key or tap Option to operate the audio documents.

If there is no song stored in the Audio Player, the phone will switch automatically to Audio List. You may roll the list by the **Navigation Key** and select a song by **OK Key,** or to select a song by tapping with the Auxiliary Pen. Then you can tap Option to add the selected song, which will be automatically loaded into the Audio Player interface.

In playing window

Tap to play the default media document; tap again to pause the playing.

Tap to stop playing.

Tap or to play the previous or next song.

Tap or to rewind or play fast forward.

Tap to play the current songs in loop.

Tap to play randomly the songs in the list.

Tap to play the songs in the list in order.

Volume adjusting

You may adjust the volume by tapping the **Volume Key** on side of the phone, or to tap the volume adjusting bar

All rights are reserved. Reproduction in whole or in parts is prohibited without the written consent of the copyright owner.

under .

Video playing

Entering/exiting the player

1. In standby mode, tap or select to enter Multimedia>Video Player.
2. In Video Player, you may tap the Left Soft Key or tap Option to operate the video documents.

Use the Auxiliary Pen to tap on the upper left area of the screen to select to view all video documents in Video Player, or documents stored in the phone or memory card. Roll the screen by the **Navigation Key**, or tap **OK Key** to select media documents to play.

All rights are reserved. Reproduction in whole or in parts is prohibited without the written consent of the copyright owner.

Tap to play video documents. Tap to stop the playing. Tap the volume bar on the right of to adjust the volume, or tap the **Volume Key** on the side of the phone to adjust the volume.

Voice Recorder

Entering/exiting the Voice Recorder

1. Select Multimedia>Voice Recorder in the main menu to go into Voice Record.
2. In the Voice Recorder interface, tap the **Right Soft Key** to return to the upper menu.

Voice recording

Tap to start recording, tap to pause the recording, then tap to play. When the recording is finished, tap the **OK Key** to store the recording. The Audio Player will automatically play the recording when finished.

Note:

Related operations could be carried out upon the current recording by selecting My Recording under the Media Folder menu.

Note: Recording time is limited to 60 minutes, and recording document is stored as *.amr.

How to copy multimedia documents into your phone

1. Enter into the main menu and select Mobile Working>Data Communication>**(Flash Disk)**. Then connect your phone with PC by data cable to activate the communication between your phone and the PC.
2. In Windows interface, copy the needed multimedia documents into your phone or corresponding directions of the memory card.
3. Upon finish, double click the USB icon on the right bottom of the computer screen, select USB Memory in the appeared “Unplug or eject hardware” and click “Stop” to exit safely, then tap to exit the interface on your phone.

Note: You may download as many multimedia documents as allowed by the memory capacity.

All rights are reserved. Reproduction in whole or in parts is prohibited without the written consent of the copyright owner.

Documents management

Select Multimedia>Media Folder in the main menu and you can view the audio and video documents and e-books stored in your phone. By tapping Option, you can also conduct needed operations to the folders.

Name card recognition

In standby mode, go into Communication>Name Card Recognition from the main menu and you can photograph and store a name card.

1. Select Option>Capture Photo, and the screen is automatically set as transverse.
2. Tally the red rim of the transverse viewfinder with the selected name card, then tap the **Camera Key** or tap OK to photo the name card. If the light is too dim, the screen will display "Too dim" in the automatic viewing frame before taking photos.

3. After taking picture of the name card, your phone will scan and recognize this name card, and store the recognized fields in name card format similar to Address Book. Current interface is in name card editing mode, and recognized fields have been filled in corresponding edit box for modification and edition.
4. Tap on top of the name card edition interface and images of the name cards that have been scanned will be displayed.

Note: You can also select images in the Name Card Recognition list to scan. When scanning and recognition are finished, the phone will switch to name card edition mode.

You can set up the language type for scanning and recognition. Default language is Chinese.

Image Processing

By using image processing tools, a picture can be created, and a photo or image stored in the mobile phone can be edited.

Image Editor

Select Multimedia > Image Editor from the main menu. With the image editor, you can create a picture or edit images and photos in your phone. After completion, press Back, and then you will be asked whether to save the file. You can

All rights are reserved. Reproduction in whole or in parts is prohibited without the written consent of the copyright owner.

save the file or exit the image editor according to the screen prompt.

To paint an image with aided pen, press Option and select New to set the size of the image. In addition, you can perform a series of operations on the image in Option.

After entering by pressing the **left soft key**, you can create a new image or open an existing image and then edit it. After completion, press **left soft key** for other operations or **right soft key** to return to the previous menu level.

Option	Indication
	Set forecolor and backcolor
	Select an area
	Brush
	Eraser
	Fill
	Rectangle
	Ellipse
90° 180° 270°	Rotate
	Pick color

All rights are reserved. Reproduction in whole or in parts is prohibited without the written consent of the copyright owner.

T T	Text

Image Browser

Viewing images

1. In standby mode, enter Menu by pressing **left soft key**, and select Multimedia > Image Browser with **arrow keys**.
2. After entering by pressing **left soft key**, display thumbnails of all image files in the phone, and zoom in the selected image by pressing **OK key**. And then you can perform a range of operations on the image including Rename, Slideshow, Zoom in and out, Set as wallpaper, Send MMS, Add a frame, Delete.

Shortcut: In the interface of thumbnails in the image browser, you can select , the icon of display options, to switch the display to the list view.

Add a frame

A frame can be added to the selected image with the option button in Image Browser to make the image more attractive.

Mobile USB Flash Drive Feature

1. Enter the main menu, and select Mobile Office > Data Connection > USB Flash Drive. After completing the setting, connect the phone to a PC using a data cable, and then you can start the connection between the phone and the PC.
2. Then, select “My Computer” and then “Removable Disk” on the PC, when, files in the computer can be copied to the phone or storage card. For details, please see the above section: How to copy multimedia files to the phone. (See Page 19).

Note:

1. After completing the completion, double-click the USB icon on the toolbar at the lower right corner to bring up the “Unplug or Eject Hardware” window, and select USB storage device. Then click “Stop”. Only after that can you unplug the phone.
2. If removing it directly, it may cause damage to the phone, as the phone does not support hot-plugging of storage card.

Wireless Connection via Bluetooth

Switch on/off Bluetooth

Switch on Bluetooth

All rights are reserved. Reproduction in whole or in parts is prohibited without the written consent of the copyright owner.

Shortcut: Select the Bluetooth icon (grey in color indicates Bluetooth is off) on the top of the screen in standby mode. Select Yes after a prompt pops up asking whether to switch on Bluetooth.

Select Multimedia > Bluetooth from the main menu and then Switch on (the current status is off) which is the first item of Bluetooth menu. After successfully switching on Bluetooth, the phone will prompt that Bluetooth is on. And then the Bluetooth icon on the screen will be lighted, indicating that the phone is ready for connection.

Switch off Bluetooth

Shortcut: Select the Bluetooth icon (blue in color indicates Bluetooth is on) on the top of the screen in standby mode. Select Yes after a prompt pops up asking whether to switch off Bluetooth.

Select Multimedia > Bluetooth from the main menu and then Switch off (the current status is off) which is the first item of Bluetooth menu. After successfully switching off Bluetooth, the phone will prompt that Bluetooth is off. And then, the Bluetooth icon on the screen will return to grey.

Note: Please first switch on Bluetooth when sending files via Bluetooth in the other applications of the phone.

Search for Devices

After successfully switching on Bluetooth, you can select the option Search for Devices from the list of Bluetooth menu, and then the phone will search for devices in the operating range of Bluetooth. After selecting Search for Devices, if Bluetooth is off, the phone will prompt you to switch on Bluetooth. When starting search, the interface will dynamically display the list of Bluetooth devices that are found. If searching no device, the phone will prompt that no Bluetooth devices are found.

All rights are reserved. Reproduction in whole or in parts is prohibited without the written consent of the copyright owner.

My Phone's Visibility

Set Bluetooth to on and My phone's visibility to Shown to all, and then the phone can be found by other Bluetooth devices.

Connection with Bluetooth Devices

Select any one from the list of Bluetooth devices that are found or paired devices for connection. If it is an unpaired device, the phone is asked for the Bluetooth pairing passcode. When the owner of the device that you want to connect with accept the Bluetooth pairing request and enter the passcode, the connection will be established successfully.

Note: If you want to connect with a Bluetooth handsfree device that is found, you must enter the pairing passcode assigned to the handsfree device.

Connection with Handsfree Devices

You can select Handsfree devices from the list of the menu in Bluetooth application to search for Bluetooth handsfree devices within the operating range of Bluetooth.

If Bluetooth is off, the phone will prompt you to switch on Bluetooth. When starting search, the interface will dynamically display the list of Bluetooth handsfree devices that are found.

If searching no device, the phone will prompt that no Bluetooth handsfree devices are found. Select a handsfree device from the list, and then enter the pairing passcode assigned to the handsfree device into the phone for pairing.

Note: There is only one default handsfree device paired with the phone.

Rename

Rename refers to the name of the phone shown on other Bluetooth devices after being found.

Note: The phone's default name is omega which can be changed by the user.

Paired Devices

Paired Devices (binding) means that you must enter a pairing passcode after connecting with a Bluetooth device, and the counterpart must confirm the passcode; then, pairing can be established successfully; passcode is not required for file transfers or connections between the paired Bluetooth devices.

Send/Receive Files

When a file is sent from the phone to the other paired Bluetooth device, the Bluetooth device that receives the request to send a file will prompt whether to accept. If the request is accepted, the file transfer will start; if refused, the request fails.

You can also select Send via Bluetooth after selecting a file in the phone.

If Bluetooth has not been activated, you should first switch on Bluetooth; after Bluetooth is on, select a device that you want to send the file to from the list of paired devices, and then the transfer will start. If no other Bluetooth device has

All rights are reserved. Reproduction in whole or in parts is prohibited without the written consent of the copyright owner.

been paired, it will prompt that no paired devices are found. In this case, you can enter the menu of Bluetooth application to search for devices and make pairing, and then select the paired device for file transfer.

When receiving the request to send a file from a paired device via Bluetooth, the phone will prompt whether to accept. If you accept, the file will be received and placed in File Manager > Bluetooth.

Note: Only when setting Bluetooth to active and selecting the option Shown to all, can the phone be found by other Bluetooth device; otherwise, the phone is hidden and can not be found.

Email

A push mechanism is adopted in the phone for prompting sending and receiving of e-mails. Select Messaging > E-mail from the main menu.

Define E-mail Settings

When initially entering the E-mail application, the phone will prompt you to set your e-mail account. After confirming setting an account, you will go to the e-mail setting interface where you can define your E-mail address, Username, Password, Mailbox server, Incoming e-mail server, Outgoing e-mail server, POP3 port and SMTP port. Follow the instructions from your e-mail account provider.

Note: You can set several accounts by selecting Create new in the Option. In addition, you can Change or Delete an existing account in the Option.

Use Mailbox and File Folder

Each existing mailbox will include Inbox, Outbox, Unsent mails, Drafts and Recycle bin for managing the receiving and sending of mails.

You can set the mail management mechanism of the mailbox in the Settings, such as size of e-mail, check interval and attachment size limit.

All rights are reserved. Reproduction in whole or in parts is prohibited without the written consent of the copyright owner.

Send E-mail

You can write new e-mail by selecting Create new from options in Mailbox. Please make reference to instructions on input methods.

You can directly enter the number of the recipient, or go to the contacts directory by pressing To, Cc and Bcc, and select an e-mail address of saved contacts to send an e-mail.

You can not only write text messages, but also attach a file selected from the file manager to the e-mail by pressing Insert attachment in the options.

Receive E-mail

The e-mail system of the phone enables the push mechanism, under which, when a new mail comes in, the system will prompt you through a prompt dialog box, ring and warning tone. After confirming reading, you can read the mail's sender, recipient and subject, index of first characters of the body as well as attachment name, size and format. After reading the above information, if you want more information and download the attachment, you can press the button Download more in the reading interface or select Download more in Option.

Read, Copy and Move E-mail

Select "read" in the prompt dialog box of new mail to read the mail.

In addition, you can go to Inbox, Outbox, Unsent mails, Drafts and Recycle bin to select a mail to read and move a mail from one folder to another.

All rights are reserved. Reproduction in whole or in parts is prohibited without the written consent of the copyright owner.

Basic Use of the Phone

How to calibrate the touch screen

When pressing on the touch screen by using the aided pen but the phone makes no exact reaction, you must calibrate the touch screen.

1. Enter Settings > Screen setting from the main menu, and press Calibrate touch screen.
2. Press the center of + according to the prompt until it is shown that the screen is calibrated.

Introduction of Icons on the Top of the Screen

Icon	Interpretation	Icon	Interpretation
	Network connection		GPRS
	Signal strength		Flight mode
	Keypad dialing		Bluetooth
	No unread e-mails. It is blinking if there are unread e-mails.		E-mail full
	Audio player is in use when the icon is blinking.		Audio player is off
	SD card		No SD card installed
	No unread messages. It is blinking if there are unread messages.		SMS full
	Battery capacity		Alarm
	Switch on unconditional call forwarding		Missed call
	MMS		Mute
	Roaming		Vibrating alert
	connected to earphones		Keypad lock

All rights are reserved. Reproduction in whole or in parts is prohibited without the written consent of the copyright owner.

How to Use Shortcuts in Standby Mode

1	Press **Arrow keys** to enter shortcuts: Press the up **arrow key** to enter Call records; Press the down **arrow key** to enter Contacts; Press the left **arrow key** to enter Audio player; Press the right **arrow key** to enter SMS. Press **OK** in the center of the arrow keys to enter the main menu.
2	Long press **# key** to switch off the speaker and switch on vibrating alert. Long press the key again to return to the initial status.
3	Press the **Camera key** on the right side of the phone to go to digital still and video camera. During a call, press the **Camera key** on the right side of the phone to record the call.
4	Press the **Lock key** on the top of the phone to lock/unlock the phone.
5	Press the **Volume up key** on the left side of the phone to increase the volume. Press the **Volume down key** on the left side of the phone to decrease the volume.
6	Long press the **Number key 1** to enter Voice mailbox; if settings have not been defined, the phone will prompt for setting.
7	Long press the **Number keys [2-9]** to use the shortcut key functions that have been configured in the option Settings/Shortcuts.

Use Handsfree Function

During a call, press the **Volume up key** on the left side of the phone to increase the volume; long press the key to switch to handsfree.

Press the **Volume down key** on the left side of the phone to decrease the volume; long press the key to switch to silent.

Input Methods

The phone offers two input methods of keypad and handwriting recognition.

How to use the handwriting function

In handwriting recognition, you can select full character recognition or handwrite in the recognition scope of Chinese, numbers, English and symbols. To facilitate operation, an analog keyboard is available in the handwriting recognition

All rights are reserved. Reproduction in whole or in parts is prohibited without the written consent of the copyright owner.

mode, allowing you to quickly press the number, letter and symbol you want.

There is an icon on the top right of the editing interface to show the input method in use for your reference. You can press the icon to view all options of input methods and make a quick switch from one input method to another. When you press the *** key** to switch input methods, the icon will show the switch.

In the common editing interface, when you touch the keypad, the phone will go to the keypad input mode automatically; when you use the handwriting pen to press the screen, the phone will switch on handwriting recognition automatically.

In the handwriting recognition interface, the upper part of the interface will show the input handwriting, and the lower part will show eight small buttons for your choice as follows:

1. **[Full]**: Widest recognition including all Chinese characters, letters, numbers and symbols; in addition, ten candidate characters and ten association characters are available for recognition.
2. **[Middle]**: The recognition scope is Chinese characters, numbers and symbols; in addition, ten candidate characters and ten association characters are available for recognition.
3. **[A/abc]**: The recognition scope is capital and small letters, excluding Chinese characters, numbers and symbols; in addition, an analog keyboard including 26 letters is available.
4. **[123]**: The recognition scope is numbers, excluding Chinese characters, letters and symbols; in addition, an analog keyboard consisting of the numbers 0-9 and common symbols is available.
5. **[@#]**: The recognition scope is symbols, excluding Chinese characters, numbers and letters; in addition, an analog keypad containing common letters is available.
6. **[_]**: Press and then input a blank prior to the cursor.
7. **[←]**: Press and delete the character prior to the cursor.
8. **[↙]**: Press for line feed.

All rights are reserved. Reproduction in whole or in parts is prohibited without the written consent of the copyright owner.

Note: In writing recognition, you can handwrite a short cross line which will be recognized by the phone as Delete, equal to [←].

In writing recognition, you can drag a character written by the handwriting pen to Copy, Paste or Delete through the right click menu.

Keypad Input Methods

Keypad input methods include T9 Pinyin input, T9 stroke input, number input, T9 letter input, stroke input and traditional Chinese input. Press *** key** to switch from one input method to another.

Barcode Label

The barcode label contains importation information on services and customer support. Please take good care of the label.

Codes

Lock Code

Prevent your phone from being used by the others without your permission. Switch on the phone lock function, and then phone code will be required for opening the phone and entering some menus.

PIN and PIN2 Codes

The PIN (personal identification number) code can prevent your SIM card from being used by the others without your permission. The code is usually supplied with the SIM card.

The PIN2 code is required when entering some functions. The code may be supplied with the SIM card.

To set the PIN and PIN2 codes, please see Settings > Security setting (Page 33).

PUK and PUK2 Codes

To change the blocked PIN code, a PUK (personal unlocking key) code is required.

To change the blocked PIN2 code, a PUK2 code is required.

If the two codes are not supplied with the SIM card, please contact the local service provider for the codes.

Lock and Unlock the Phone

There are two ways to lock the phone as follows:

Automatic

In the case of no new event or operation within the sleeping mode clock of the screen that has been configured in Settings > Phone setting, keypad and screen of the phone will be locked automatically. Press the **Lock key** on the top of the phone to unlock.

Manual

Press the **Lock key** on the top of the phone to lock the keypad and screen; press again to unlock.

All rights are reserved. Reproduction in whole or in parts is prohibited without the written consent of the copyright owner.

Setting up your phone

Basic setup

Setting the display language

Set up the language type of your phone:

1. Select Set up>Set up Your Phone>Language Setup and tap "OK".
2. Select the language needed and tap "OK" to store your change and exit; tap "Return" to cancel your setup.

Setting date and time

Set the current time or date of your phone.

1. Select Set up>Set up Date and Time and tap "OK".
2. Move the cursor to different options up and down and enter the correct time and date. You may also set the display order of date.

Setting the input method

Set the input method of your phone.

1. Select Set up>Set up your phone>Set up input method and tap "OK".
2. Select the input method needed and tap "OK" to save your setup and exit; tap "Return" to cancel your setup.

Setting the welcome note

Set the welcome note your phone displays when the phone is powered on.

1. Select Set up>Set up your phone>Welcome note and tap "OK".
2. Enter your welcome note in the welcome note dialog box and tap "OK" to store your setup and exit; tap "Cancel" to exit the setup of welcome note.

Switching on/off your phone automatically

Activate this function to allow your phone switch on/off automatically at preset time.

1. Select Set up>Set up your phone>Switch on/off your phone automatically and tap "OK".
2. Move the cursor between switch on/off options and select the right option, then tap the **OK Key** and enter the needed time for switching on/off your phone. Tap "OK" to save your setup and exit.

Tap "Return" to cancel your setup.

Automatic lock

Select Set up>Set up your phone>Automatic lock in the main menu and tap "OK", and the function of automatically locking the keypad and screen will be activated in 30 seconds.

Short cut

Select Set up>Set up your phone>Short cut and you can set some functions to correspond to the **Numeric Key** (2-9).

All rights are reserved. Reproduction in whole or in parts is prohibited without the written consent of the copyright owner.

Press and hold the corresponding Numeric Key to activate this function.

Signature

Select Set up>Set up your phone>Signature in the main menu and tap "OK", then you can conveniently attach your compliments in your message.

The signature edition interface is the same as the common text edition interface, for which you can refer to the descriptions about Note Pad and Input Method.

Note:

You can edit multiple signature documents for your phone. You can firstly activate Signature function in the application interface which needs signature document, then select the needed signature.

Due to different features of various applications, displayed character length of signature document will be adjusted according to specific applications.

Setting the sound

Volume setup

You can adjust the volume using the **Volume Key** on the upper left side of your phone.

Setting the ring of your phone

1. Select Set up>Sound setup and tap "OK".
2. Select rings for Incoming call, Incoming call notification, Short message, Multimedia message and Alarm clock, then tap "OK" to save your setup and exit. Tap "Return" to cancel your setup.

Profile

1. Select Set up>Profile in the main menu and tap "OK".
2. Select the needed profile such as General, Silent, Meeting and Outdoor, then tap "OK" to save your settings and exit. Tap "Return" to cancel your settings.

Security setup

Select Set up>Security setup in the main menu and tap "OK", then you can conduct the following operations.

PIN code protection

You can select to activate or close the PIN code. Your PIN code is originally set to 1234 (for more information, please contact your network service provider).

If your PIN is activated, you will be required to enter the PIN code after your phone is powered on, otherwise you will not use your phone as usual, except for emergency calling, but other PDA functions will not be affected.

PIN code is a 4~8-digit code. If you have entered wrong PIN code for 3 times, the PIN code will be locked, and you

All rights are reserved. Reproduction in whole or in parts is prohibited without the written consent of the copyright owner.

have to ask your network service provider for PUK. If you have entered wrong PUK for 10 times, your SIM card will be burned.

Changing your PIN

You can change your PIN code only when the PIN is activated.

Go into the menu and enter the old PIN code, then enter your new PIN and select “OK”. Your phone will then give an indication to tell you that the PIN has been modified.

Firewall

You can bar calls and short messages from certain numbers through firewall.

Short message firewall

In standby mode, select Short message in Setup/Security/Firewall, then tap the Left Soft Key to go into menu options and add and save new numbers. Or you may select numbers from your address book to add to the firewall list. You can edit or modify the firewall list.

Incoming call firewall

In standby mode, select Dialing in Setup/Security/Firewall, then tap the Left Soft Key to go into menu options and add and save new numbers. Or you may select numbers from your address book to add to the firewall list. You can edit or modify the firewall list.

Setup

You may set your phone to open or close the short message firewall and incoming call firewall.

Information about the barred short message and calls are recorded in the Firewall Log.

Code protection

You can select whether to open or close the code protection function of your phone to protect your personalized information, such as short message/multimedia message, address book, calling record and power on. After your phone is powered on, if you want to visit these menus, you are required to enter the code, which is originally set to 0000.

Changing the code

You may change the original code of 0000 to your familiar numbers.

Recover to the original settings

Once recovered, some personalized settings will be removed to the original status.

Screen setup

Standby style

1. Select Set up>Screen setup>Standby style in the main menu and tap “OK”.
2. Select the Monthly calendar, Analog clock and Digital clock displayed on the screen when your phone is in standby mode.

Standby content

1. Select Set up>Screen setup>Standby content in the main menu screen and tap “OK”.
2. Select the Wallpaper, Date, Week and Lunar calendar displayed on the screen when the phone is in standby mode.

Wallpaper setup

1. Select Set up>Screen setup>Wallpaper and tap “OK”.
2. Select the needed wallpaper in the picture list, and you can conduct operations such as Previewing, Thumbnail

All rights are reserved. Reproduction in whole or in parts is prohibited without the written consent of the copyright owner.

viewing and Setting as wallpaper on them.

Menu style

1. Select Set up>Screen setup>Menu style in the main menu and tap "OK".
2. You can select the menu display style as Thumbnail or in List.

Brightness adjusting

1. Select Set up>Set up your phone>Brightness adjusting and tap "OK".
2. You can adjust the brightness of your phone according to your own requirements.

Screen resting interval

1. Select Set up>Setup your phone>Screen resting interval in the main menu and tap "OK".
2. You can adjust the screen resting interval of your phone according to your requirements.

Network setup

Set the manners of searching network connection and data connection for your phone.

Select Set up>Network setup in the main menu and tap "OK".

Preferred networks

Setting preferred networks

Tap "preferred networks" in the network setup interface, then select "show preferred" to show the preferred networks list.

After selecting a network, tap s_1 to set this network as preferred and move this network to the first place of the list.

Delete preferred networks

Tap "preferred networks" in the network setup interface, then select "delete preferred" to delete the preferred networks list.

After selecting a network, tap s_1 to delete this network.

Viewing the current network

Tap "preferred networks" in the network setup interface, then select "add available" to conduct manual search and your phone displays the current networks list.

Listing the available networks

Tap "preferred networks" in the network setup interface, then select "add existing" to show available networks list.

Adding network code

Enter country code and network code to add a network.

Registering a network again

Tap "register again" in the network setup interface and search and register the networks again.

Note：All operations related to network shall be conducted under instructions and carefully.

Data connection manner

You can set the data connection manner when connecting your phone with WAP&WEB. To avoid wrong setup, it's suggested that you consult with your network service provider when setting.

All rights are reserved. Reproduction in whole or in parts is prohibited without the written consent of the copyright owner.

Flying mode

Shortcut：Tap on the main screen to open or close the flying mode.

Select Set up>Flying mode in the main menu to open or close the flying mode.

When the phone is in flying mode, calling functions is stopped. You may use this mode in places which could not be disturbed by network signals such as planes and hospitals.

Note：When your phone is turned on again, the flying mode will be automatically closed.

All rights are reserved. Reproduction in whole or in parts is prohibited without the written consent of the copyright owner.

How to use your Address Book

How to view your contact list

Go into Communication>Address book in the main menu and open your contact list, then use the Navigation Key to scroll the list or use the auxiliary pen to view the list.

Tap Options>Search, and you can view your contact's details in terms of Key Word or Group.

Note:

Your phone supports quick inquiry and location by the keypad. For example, if you enter W, the phone will search all Chinese abbreviations and English names that are initiated with W. When the search is finished, the cursor will stop at the first qualified contact record.

Adding a new contact

Tap Options>New Contact and you can go into the adding new contact interface. Enter the contact name, group and phone number in turn then tap "OK" to save.

Creating a group

You can setup the group a new contact belongs to when you add this new contact. You can select groups in Default, Family, Friends, Schoolmates, Society and Private.

Calling or sending a message to a contact

Tap Options>Send message, send a short message or multimedia message to this contact.

Checking address book capacity

Tap Options>Others>Capacity and check the capacity of your Address Book.

Viewing and editing owner's information

Tap Options>Others>Owners information, modify, delete, display or send the owner's information.

Related settings of the Address Book

Tap Options>Others to conduct the following setup.

Group

Personalize the ringing tone and picture of a group, or to rename a group.

Ip Special Service Code

Set and enter your IP special service code.

Preferred storage site

Save information in the SIM card or in your phone.

Copy the information in your Address Book

Copy the Address Book information in your SIM card to your phone or vice versa.

Delete information in the Address Book

Delete the Address Book information in your SIM or in your phone.

All rights are reserved. Reproduction in whole or in parts is prohibited without the written consent of the copyright owner.

Communication Features

Calling Features

Calling Settings

Select Settings>Calling Settings from main menu，calling settings can be personalized as follows.

Call Waiting： When a new call is received during an active call, the new call can be answered after the current call is finished.

Call Forwarding： The incoming calls can be forwarded to other phone numbers.

Call Restriction： Restrict users to dial some phone numbers.

Minute Alert Tone： With this feature on, an alert beep tone will be given every 50 seconds in a call, so that the user can control the length of calling time.

Any Key Answering： With this feature on, incoming calls can be answered by pressing any key except the **Power Key**.

Automatic Redial： With this feature on，the cell phone will automatically redial the failed phone number up to 10 times after an outgoing call is failed.

Automatic Answering： Incoming calls can be directly answered without pressing the **Answer Key** after the earphone is plugged in.

Your Phone Number sending： Make your phone number shown to the other party. （**Note:** Domestic network in China does not support this feature setting, default is switching on status. ）

Redialing

Press the **Call Key** or press the **Up Scroll Key** in standby interface to enter call log list, select the phone number in the list, and then press the

Call Key or enter the corresponding operation menu to select calling feature.

Note： In standby interface, press and hold the **Call Key** to redial the last called number automatically.

Declining incoming calls

When an incoming call is received by user's cell phone, press the **Power Key** to decline answering. Click set busy，send user busy alert to users.

Note： Incoming calls can be forwarded to other phone numbers or the busy beep tones can be heard by callers according to cell phone settings or network service provided.

Switching off a call alert

Users can switch off a call alert before answering the incoming call.

Press and hold the **Down Volume Key** or click mute icon to switch off a call alert

Adjusting call volume

During an active call, the earpiece volume can be adjusted by pressing and holding the **Volume Key** on the side of the cell phone.

Handsfree feature

Press the **Volume Key** to adjust, while press and hold the **Up Volume Key** to make the active call handsfree.

All rights are reserved. Reproduction in whole or in parts is prohibited without the written consent of the copyright owner.

Putting an active call on mute

Make your voice unheard by the other party during an active call. Press and hold the **Down Volume Key** to switch on Mute feature; or enter Operation menu to select Mute. The menu display switches between Mute on and Mute off.

Calling an emergency number

The network service provider offers one or more emergency numbers (such as 112), that can be called under any circumstance even when the cell phone is locked or the SIM card is not inserted or the PIN is locked.

Note: The emergency numbers provided by different countries may vary.

Dialing international numbers

Press and hold the *** Key** to input +， and then input phone number to dial or insert 00+ phone number to call.

Dialing extension numbers directly

P (pause) can be inserted into the inputting number to dial extension numbers or voicemail box.

Open keypad keys, input the phone number, then click and hold **# Key** to input P, and then input the extension number.（Keypad operation can also be used）

The cell phone waits for connection after dialing the phone number, and then dials the following number. The number of pause P is decided by the waiting time to dial extension numbers.

Note: W(wait) can be inserted in the same way. The cell phone waits for connection after dialing the phone number, and then prompts you the confirmation before dialing the following number.

Checking and using call log

Users can enter call log by pressing the **Call Key, Up Scroll Key** and from main menu Communication Features>Call Log.

Click Unanswered, Answered and Dialed to check the corresponding list.

The lists are sorted according to the time order from the newest entry to the oldest one. Old entries are deleted automatically when new entries are stored. Click the wanted entry to display the detailed information. The selected entry can be dialed by pressing the **Call Key.** Users can also execute the operations of Store, Handsfree call, Delete, Add to black name list, Check calling time, Send short message, IP dial etc.

Maintaining an active call----Needing network support

Click maintaining icon ， or enter menu to select maintaining feature during an active call. Maintaining will be canceled by selecting it again.

Note: This service should be offered by network provider.

Making other calls during an active call

A second call can be dialed by using call waiting feature during an active call.

During the calling process:

Directly press the keypad keys to input the phone number and then make a call; or enter Active call menu to select Call a new number or click the Dialing keypad icon in the home screen to input the number, and then make a call.

Users can switch between the two numbers after the second number is answered.

Enter Operation menu to select Switch.

Click the **Ending Key** to end the current call. Press the **Power Key** to end all the calls.

Making a conference call

All rights are reserved. Reproduction in whole or in parts is prohibited without the written consent of the copyright owner.

With this feature on, users can speak to more than one people and make a conference call.

Input a number with keypad keys to make a call, after the call is connected, enter operation menu and select Maintain to maintain this call.

Make another call, after the call is connected, enter menu and select Make a Conference Call or click Conference Call icon in calling interface.

More calls can be added to the call conference by repeating this operation.

Note: The necessary party can be separated by selecting separating feature during a multi-party call.

Recording during an active call

During an active call, users can enter record feature menu or clicking the recording icon in calling interface to enter recording feature.

Incoming call forwarding

Forward a voice call to another phone number.

In standby interface, select Settings>Calling Settings from the main menu.

Select incoming call forwarding after selecting call forwarding entry.

Forward all calls: to forward all incoming calls

Forward if busy: to forward incoming calls when users have an active call

Forward if not answered: to forward incoming calls when incoming calls are not answered

Forward if out of reach: to forward incoming calls when the phone is out of network coverage or switched off or unable to be connected.

Cancel all: to cancel all the forwarding settings.

Calling restriction

Calling restriction can make cell phone to restrict incoming calls and outgoing calls with options.

In standby interface, enter menu to select Settings>Calling Settings after clicking menu. Restrict all the incoming calls after selecting calling restriction entry.

Messaging Features

Short message

Setting signature

The User can select Switch on or Switch off signature feature in setting menu of short message, if signature feature is edited in Phone Settings in user's cell phone. The selected signature content will be automatically added to the area of creating short message contents.

Sending text message

Users can edit new message content by clicking Create in Options of Short Message. The particular inputting methods refers to the related descriptions of inputting methods; From Options menu, users can select User Self-Define to insert the text contents self-defined by users. Users can directly input recipient's number, and users can also click Recipient in

All rights are reserved. Reproduction in whole or in parts is prohibited without the written consent of the copyright owner.

the interface by handwriting pen or select Phonebook in Options menu, and then send the message after selecting the stored phone number. The message can be sent to up to 10 selected contact persons at one time.

Note:

1. User's cell phone will automatically store the edited message contents if users exit accidentally in editing new message; User's cell phone will automatically retrieve the contents edited at the last time, when users create messages again. The edited contents will not be stored if they are sent successfully.。

2. On the upper right corner of the interface of short message application, is the shortcut icon of Create. Click this icon to Create short messages.

Receiving messages / message alert

After a message is received, the cell phone will pop out the corresponding message alert box, the short message icon on the upper part of the main screen will twinkle. And the cell phone will alert the user according to the short message ring and vibration mode set up by the user.

In the special interfaces such as during an active call etc, the short alert beep tone will be given when there is an incoming message; The alert box for incoming messages will be popped out correspondingly after exiting this kind of special interfaces.

Reading and replying messages

After a message is received, the cell phone will pop out the corresponding message alert box to alert the user according to the short message ring and vibration mode set up by the user. Users can directly select to click Read in the alert box or press keypad **Left Selection Key** and Confirm key to open short message contents and read them. Users can also enter short message Inbox clicking or click Confirm key to open and read the corresponding short message entries.

Users can select Reply in Options to make corresponding reply editing in reading interface of short messages; Users can also directly select

Reply in Options in short message listing status. The phone number of Recipient in Reply interface is the original phone number of the sender.

Users can edit and modify the phone number.

Checking messages by sorts

Short messages are managed by sorting them into Inbox, Sent, Outbox, and Collection Folder, to which users can execute read, edit and reply operations respectively.

When a message is selected in message listing interface, the contents of the selected message will be displayed in a scrolling way. The sender and

the contents are scrolled as a sequence for convenience of quick checking.

Note: The messages stored in SIM card will display the little icon of SIM card at the right side of the list.

Checking messages in Outbox

Select Options > Store when creating a message or the message failed to send will be automatically stored in Drafts.

Users can execute Read, Edit, and Delete operation for the messages in Drafts box.

Checking messages in Collection Folder

The messages in Inbox can be transferred to Restore Folder. The messages in Collection Folder can only be stored in

All rights are reserved. Reproduction in whole or in parts is prohibited without the written consent of the copyright owner.

the cell phone but not in SIM card.

Deleting messages

Users can click Options > Delete in message reading interface to delete the current message. Users can also delete messages by clicking the shortcut little icon at the upper right corner of message listing interface.

If a large quantity of messages is needed to be deleted, users can enter Options > Delete in message reading interface to delete short messages. Users can execute batch deleting operations to delete all the short messages, Inbox, Sent, Outbox, Collection Folder, SIM card, 1 day ago, 3 days ago.

Note:

The cell phone will pop out an alert box before a message is deleted or a large quantity of messages is deleted. The delete operation will be executed after it is confirmed by users.

Multimedia messages

Sending multimedia messages

Enter Main Menu > Communication Features > Multimedia Short Messages.

Click Create entry in Multimedia Short Messages interface to edit new multimedia messages including pages of contents of Text, Pictures, Music, Video, Attachments etc. The particular inputting methods refer to the related descriptions of inputting methods.

Select to insert User Self-Define text contents in Option menu. In creating interface of multimedia messages,

Click to select adding page or deleting page operation.

Click to select inserting current pictures or instantly self-drawn pictures; Click again to select operation of Change or Delete after the pictures have been inserted in the current page.

Click to select inserting Audio, inserting Video, inserting instant recording files; Click again to select operations of Change or Delete after the Audio, Video files have been inserted in the current page.

Click to take photographs instantly, insert instantly; Click again to select operations of Change or Delete after the pictures have been inserted in the current page.

Click to enter file management of the cell phone, select the attachments needed to insert; after the attachments have been inserted, click again to enter attachment list, and select operations of Add, Delete, Delete All.

Users can directly input recipient's number, and users can also click Recipient in the interface by handwriting pen or select Phonebook in Options menu, and then select the stored phone number. Users can also select Preview in Options to preview the edited multimedia messages

All rights are reserved. Reproduction in whole or in parts is prohibited without the written consent of the copyright owner.

Receiving messages

After a message is received, the cell phone will pop out the corresponding alert box to alert users according to the multimedia message ring and vibration mode set up by users.

In the special interfaces such as during an active call etc, the short alert tone will be given when there is a incoming message; The alert box for incoming multimedia messages will be popped out correspondingly after exiting this kind of special interfaces.

Reading and replying messages

After a multimedia message is received, the cell phone will pop out the corresponding message alert box to alert the user according to the short message ring and vibration mode set up by the user.

Users can directly select to click Read in the alert box or press Confirm key to open message contents and read them. Users can also enter multimedia message Inbox clicking or click Confirm key to open and read the corresponding message entries.

Users can select Reply in Options to make corresponding reply editing in reading interface of multimedia messages; Users can also directly

select Reply in Options in message listing status. The phone number of Recipient in Reply interface is the original phone number of the sender.

Users can edit and modify the phone number.

Checking messages by sorts

Multimedia messages are managed by sorting them into Inbox, Sent, Outbox, Drafts and Collection Folder, to which users can execute read,

edit, reply operations respectively.

When a message is selected by the scroll bar in message listing interface, the contents of the selected message will be displayed in a scrolling

way.

The sender and the contents are scrolled as a sequence for convenience of quick checking.

There are five icons in message reading interface, which can be clicked to Play/Pause; Store Pictures, Store Audio, Store Video, Store Attachments;

There are two alert statuses for the latter four icons;

Grey: There is no file of this kind in the current screen;

Bright: There are files of this kind in the current screen; the files can be stored after clicking.

Users can also pick up message numbers, pictures, audio, video files by entering Options.

Checking messages in Drafts

Users can select Options > Store when creating messages, then the created messages will automatically be stored in Drafts.

Users can execute Read, Edit, and Delete operation for the messages in Drafts box.

Checking messages in Restore Folder

The messages in Inbox can be transferred to Restore Folder. The messages in Collection Folder can only be stored in the cell phone but not in SIM card.

Deleting messages

Users can click Options > Delete in message reading interface to delete the current message. Users can also delete

All rights are reserved. Reproduction in whole or in parts is prohibited without the written consent of the copyright owner.

messages by clicking the shortcut little icon at the upper right corner of message listing interface.

Note:

The cell phone will pop out an alert box before a message is deleted or a large quantity of messages is deleted. The delete operation will be executed after it is confirmed by users.

All rights are reserved. Reproduction in whole or in parts is prohibited without the written consent of the copyright owner.

Mobile Working

Select Mobile working in the main menu, and you go into the following interfaces.

Calendar

You can use your phone's calendar to schedule and organize events.

Note: You must set the correct time and date to use the calendar.

Shortcut：In standby mode, tap Calendar on the bottom of the main screen to activate the calendar.

Go into the main menu and select Mobile working>Calendar.

Adding a new event

1. Open the Calendar.
2. Tap the day to which you want to add an event. Your phone lists the day's events.
3. Tap Options>New Event and enter the Subject and Detail of the new event. Setup alarm reminder and repeat alarm manner, then tap "OK" to save the event and exit.

Viewing an event

Note：The three-cornered indicator in the bottom right corner of the Calendar indicates that one or more events are scheduled for the day. Tap the date box to display the day's events. Tap an event to display event details.

Month view

Tap **M** in the bottom left of the date box to view the month's events. Tap ← or → to display events of the previous or next month. Tap an event to display event details.

Week view

Tap **W** in the bottom left of the date box to view the week's events. Tap ← or → to display events of the previous or next week. Tap an event to display event details.

Day view

Tap **D** in the bottom left of the date box to view the day's events. Tap ← or → to display events of the previous or next day. Tap an event to display event details.

Deleting an event

Tap the event to display event details.

Tap Options>Delete to delete, under instructions, the Current, Outdated or All events.

View a specific date's event

Tap Options>Go to in the Calendar interface, and enter the specific date and confirm. Your phone will list that day's events.

Setup

Tap Options>Setup in the Calendar interface, and you can personalize the Default view, Weekly start and Daily start of the Calendar.

Note Pad

Select Mobile Working>Note Pad in the main menu.

All rights are reserved. Reproduction in whole or in parts is prohibited without the written consent of the copyright owner.

1. Open the note pad and begin editing.
2. Tap the input area to select needed input method and enter the information on the keypad you want to record.
3. Enter a name and tap Save to save the note.

Note : Tap "Options" in Calendar mode to conduct operations such as New, Save and Search.

Alarm Clock

Select Mobile Working>Alarm Clock in the main menu. Your phone has 3 separate alarms that you can set to alert you at the time you specify.

1. Tap a check box to activate the alarm.
2. Tap the corresponding time settings and alarm frequency to setup the proper alarm time and manner (once, working day, every day).
3. Tap a check box at the right of Snooze to set snooze period. When the alarm expires, your phone will sounds again after a while.
4. Tap "Ring Setup" at the bottom of the screen and you can set ring for your alarm.
5. Tap "Finish" to save your setup and exit.

When the alarm expires, your phone sounds an alert.

Calculator

Tap "Mobile Working>Calculator" in the main menu.

Tap the numeric and calculation keys to perform a calculation in Calculator interface. Tap = to view the result. Tap ← to clear the last entry, one digit at a time, when performing a calculation.

Chinese-English Dictionary

Tap Mobile Working>Chinese-English Dictionary in the main menu.

Enter the Chinese or English word which you want to look up to, and the Dictionary translates it for you.

Stopwatch

Tap the **OK Key** to start timing. Tap the **Left Soft Key** to pause, and the screen displays the time; tap the **Left Soft Key** once again to continue timing. Tap the **Right Soft Key** to time separately.

Timer

Tap the numeric keys to enter your time for counting down. Tap the **Left Soft Key** to return to the standby interface, and the screen displays the countdown time. When the time expires, your phone will give you a notification.

World Clock

You can look up the current time and date for multiple cities around the world.

1. Tap the **Navigation Key** to scroll the city list to select the needed city and view the corresponding time.
2. Tap the **Left Soft Key** when viewing to set the time of current city as local time or daylight saving time.

All rights are reserved. Reproduction in whole or in parts is prohibited without the written consent of the copyright owner.

Data connection

Please refer to related descriptions about flash disk (P21).

All rights are reserved. Reproduction in whole or in parts is prohibited without the written consent of the copyright owner.

Entertainment Function

Web Browser

Web Browser enables you to visit websites and use other internet-based functions of the cell phone. For more information about how to get connected, contact the network operator.

Note: Both GPRS and CSD are available to use while connecting Internet. The type of the connection depends on your network operator. The service fee varies as you choose different types of connection.

Start the Browser

Under power saving interface, press **Left Soft Key** to enter the menu and select **Communications/Web browser**

The browser will connect the main page automatically, or you can key in the homepage address that you want to see and press the key

to start connecting. If the connection fails, contact your network provider for more information.

Visiting a Web Page

Use the **Scroll Button** or **Upward/Downward Keys** to browse the web pages or option menu. Press the **Option Key** to carry out the operation.

For web pages with text fields, you can use the text field to interactive information with websites. Select the text field and you can type words in.

Press the **Left Soft Key** to enter the operational menu to perform more operation about the web browser.

Download Files

Select connect to enable you to download file, games and other application.

Disconnect the Internet

Press the Right Soft Key or select the last icon to quit the web browser.

Network Connections Setting

You can connect to the Internet through different ways.

Choose the Setting

To choose the setting, select the icon in the toolbar to enter the web browser setting list and select the server setting, choose the setting list you need, activate it and get connected to the Internet the list represents.

Note: Different setting lists direct to different ways of data connecting. You can make any change in the network setting as you wish. Please handle carefully!

All rights are reserved. Reproduction in whole or in parts is prohibited without the written consent of the copyright owner.

Create a New Setting List

To create a new setting list requires you to key in corresponding setting information. For more information, please contact the network operator.

Select the setting icon in the toolbar to open the network setting list and choose the server setting.

Press the **Left Soft Key** to select the new and create a new network connection setting list.

Select each column to key in the corresponding setting information.

Press **Enter** after key in the information to save the setting.

Download Push Message

You can receive push message sent through Internet.

STK

Your SIM card may provide additional services.

Under power saving interface, press **Left Soft Key** to enter the menu and select **Communications/STK.**

After entering the menu, select an item of service or function to enter into the service or function menu.

For more information, please contact the network operator.

All rights are reserved. Reproduction in whole or in parts is prohibited without the written consent of the copyright owner.

Answers for inquiries

Problems	Solutions
"Unlock PIN" is displayed when the cell phone is turned on.	Cell phone has been inputted PIN by error, please contact network Provider.
There is no signal strength displayed.	Network connection has been lost. It is possible that the cell phone is located at a signal blind corner or it is out of the network covered area. Please change a place to try it again, or contact your service centre for helps.
Keypad doest not respond (or responds slowly).	Screen will respond slowly at very low temperature. It is normal, and will not infect the operations of the cell phone. Please go to a warmer place to try it again.
There is no display when the cell phone is charged.	The battery charge is too low or the environmental temperature is out of the acceptable range（0-45℃）. Please wait for a few minutes or remove the cell phone to a warmer place and make it charged again.
"Not provided" or "Not set up" is displayed in the screen when a cell phone feature is in use.	Many features can only be used when they are supported by the system or by the services applied for. Please contact network provider for detailed information.
"SIM card is damaged" is displayed in the screen.	SIM card may be damaged. Please inquire it with network provider.
"Please insert SIM card" is displayed in the screen.	Please make sure that SIM card has been correctly inserted. SIM card maybe damaged if the problem is still there. Please inquire it with network provider.

Original manufacturer's accessories that can be selected to purchase

Battery

1. Please use the battery indicated by the original manufacturer of your cell phone. Using any other accessories will make all the warranty services invalid. Your cell phone manufacturer will assume no responsibility for the damages caused by using accessories not manufactured by the original manufacturer on your cell phone.
2. Please don't let metal articles (for example: the keys in your pocket) make the battery contactors short-circuited.。

All rights are reserved. Reproduction in whole or in parts is prohibited without the written consent of the copyright owner.

3. Please don't bent the battery or open it by force.
4. Please don't immerse the battery into water or put it into fire.
5. The battery must be charged under the temperature nearly equal to room temperature. The battery may not be charged, if the temperature is lower than 0 degree Celsius (32 degrees Fahrenheit) or higher than 45 degrees Celsius (113 degrees Fahrenheit).

Fast portable charger

The cell phone battery can be quickly charged by using fast portable charger. Insert the charger into 220 Volt socket and insert the other side into the bottom of the cell phone. Please make sure that the battery has been correctly installed in the cell phone before charging. Please don't make the battery dismantled or removed in charging.

Data line

Please use the standard data line made by the original manufacturer of the cell phone; otherwise all the warranty services will be regarded as invalid. The cell phone manufacturer will assume no warranty responsibility for the damages caused by this.

All rights are reserved. Reproduction in whole or in parts is prohibited without the written consent of the copyright owner.

All rights are reserved. Reproduction in whole or in parts is prohibited without the written consent of the copyright owner.