ENGLISH

D 3020

Hybrid Digital Amplifier

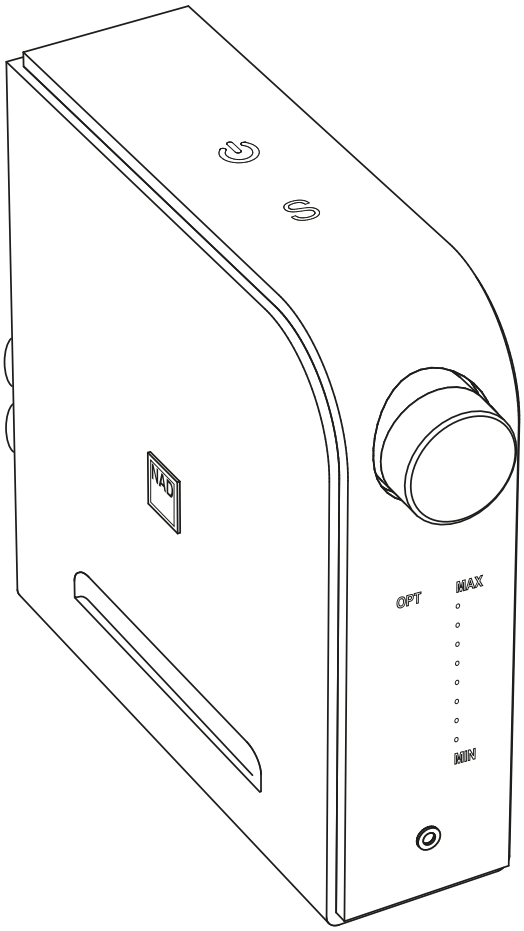

Owner's Manual

IMPORTANT SAFETY INSTRUCTIONS

SAVE THESE INSTRUCTIONS FOR LATER USE.
FOLLOW ALL WARNINGS AND INSTRUCTIONS MARKED ON THE AUDIO EQUIPMENT.

1 **Read instructions** - All the safety and operating instructions should be read before the product is operated.
2 **Retain instructions** - The safety and operating instructions should be retained for future reference.
3 **Heed Warnings** - All warnings on the product and in the operating instructions should be adhered to.
4 **Follow Instructions** - All operating and use instructions should be followed.
5 **Cleaning** - Unplug this product from the wall outlet before cleaning. Do not use liquid cleaners or aerosol cleaners. Clean only with a dry cloth.
6 **Attachments** - Do not use attachments not recommended by the product manufacturer as they may cause hazards.
7 **Water and Moisture** - Do not use this product near water-for example, near a bath tub, wash bowl, kitchen sink, or laundry tub; in a wet basement; or near a swimming pool; and the like.
8 **Accessories** - Do not place this product on an unstable cart, stand, tripod, bracket, or table. The product may fall, causing serious injury to a child or adult, and serious damage to the product. Use only with a cart, stand, tripod, bracket, or table recommended by the manufacturer, or sold with the product. Any mounting of the product should follow the manufacturer's instructions, and should use a mounting accessory recommended by the manufacturer.
9 A product and cart combination should be moved with care. Quick stops, excessive force, and uneven surfaces may cause the product and cart combination to overturn.
10 **Ventilation** - Slots and openings in the cabinet are provided for ventilation and to ensure reliable operation of the product and to protect it from overheating, and these openings must not be blocked or covered. The openings should never be blocked by placing the product on a bed, sofa, rug, or other similar surface. This product should not be placed in a built-in installation such as a bookcase or rack unless proper ventilation is provided or the manufacturer's instructions have been adhered to.
11 **Power Sources** - This product should be operated only from the type of power source indicated on the marking label. If you are not sure of the type of power supply to your home, consult your product dealer or local power company. The primary method of isolating the amplifier from the mains supply is to disconnect the mains plug. Ensure that the mains plug remains accessible at all times. Unplug the AC power cord from the AC outlet if the unit will not be used for several months or more.
12 **Grounding or Polarization** - This product may be equipped with a polarized alternating current line plug (a plug having one blade wider than the other). This plug will fit into the power outlet only one way. This is a safety feature. If you are unable to insert the plug fully into the outlet, try reversing the plug. If the plug should still fail to fit, contact your electrician to replace your obsolete outlet. Do not defeat the safety purpose of the polarized plug.
13 **Power Cord Protection** - Power supply cords should be routed so that they are not likely to be walked on or pinched by items placed upon or against them, paying particular attention to cords at plugs, convenience receptacles, and the point where they exit from the product.
14 **Outdoor Antenna Grounding** - If an outside antenna or cable system is connected to the product, be sure the antenna or cable system is grounded so as to provide some protection against voltage surges and built-up static charges. Article 810 of the National Electrical Code, ANSI/NFPA 70, provides information with regard to proper grounding of the mast and supporting structure, grounding of the lead-in wire to an antenna discharge unit, size of grounding conductors, location of antenna discharge unit, connection to grounding electrodes, and requirements for the grounding electrode.

NOTE TO CATV SYSTEM INSTALLER
This reminder is provided to call the CATV system installer's attention to Section 820-40 of the NEC which provides guidelines for proper grounding and, in particular, specifies that the cable ground shall be connected to the grounding system of the building, as close to the point of cable entry as practical.

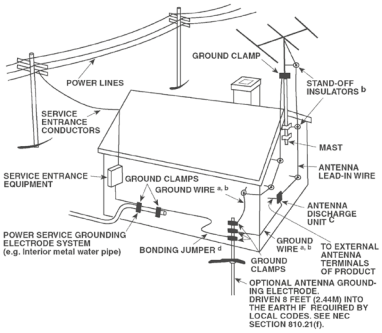

15 **Lightning** - For added protection for this product during a lightning storm, or when it is left unattended and unused for long periods of time, unplug it from the wall outlet and disconnect the antenna or cable system. This will prevent damage to the product due to lightning and power line surges.
16 **Power Lines** - An outside antenna system should not be located in the vicinity of overhead power lines or other electric light or power circuits, or where it can fall into such power lines or circuits. When installing an outside antenna system, extreme care should be taken to keep from touching such power lines or circuits as contact with them might be fatal.
17 **Overloading** - Do not overload wall outlets, extension cords, or integral convenience receptacles as this can result in a risk of fire or electric shock.
18 **Object and Liquid Entry** - Never push objects of any kind into this product through openings as they may touch dangerous voltage points or short-out parts that could result in a fire or electric shock. Never spill liquid of any kind on the product.

WARNING: THE APPARATUS SHOULD NOT BE EXPOSED TO DRIPPING OR SPLASHING, AND OBJECTS FILLED WITH LIQUIDS, SUCH AS VASES, SHOULD NOT BE PLACED ON THE APPARATUS. AS WITH ANY ELECTRONIC PRODUCTS, USE CARE NOT TO SPILL LIQUIDS INTO ANY PART OF THE SYSTEM. LIQUIDS CAN CAUSE A FAILURE AND/OR A FIRE HAZARD.

19 **Damage Requiring Service** - Unplug this product from the wall outlet and refer servicing to qualified service personnel under the following conditions:
   a) When the power supply cord or plug is damaged.
   b) If liquid has been spilled, or objects have fallen into the product.
   c) If the product has been exposed to rain or water.
   d) If the product does not operate normally by following the operating instructions. Adjust only those controls that are covered by the operating instructions as an improper adjustment of other controls may result in damage and will often require extensive work by a qualified technician to restore the product to its normal operation.
   e) If the product has been dropped or damaged in any way.
   f) when the product exhibits a distinct change in performance-this indicates a need for service.
20 **Replacement Parts** - When replacement parts are required, be sure the service technician has used replacement parts specified by the manufacturer or have the same characteristics as the original part. Unauthorized substitutions may result in fire, electric shock, or other hazards.
21 **Safety Check** - Upon completion of any service or repairs to this product, ask the service technician to perform safety checks to determine that the product is in proper operating condition.
22 **Wall or Ceiling Mounting** - The product should be mounted to a wall or ceiling only as recommended by the manufacturer.
23 **Heat** - The product should be situated away from heat sources such as radiators, heat registers, stoves or other products (including amplifiers) that produce heat.
24 **Headphones** - Excessive sound pressure form earphones and headphones can cause hearing loss.
25 **Battery Disposal** - When disposing of used batteries, please comply with governmental regulations or environmental public instruction's rules that apply in your country or area. Batteries (battery pack or batteries installed) must not be exposed to excessive heat such as sunshine, fire or the like.

FCC NOTICE
This equipment has been tested and found to comply with the limits for a Class B digital device, pursuant to part 15 of the FCC Rules. These limits are designed to provide reasonable protection against harmful interference in a residential installation.

This equipment generates, uses and can radiate radio frequency energy and if not installed and used in accordance with the instructions, may cause harmful interference to radio communications. However, there is no guarantee that interference will not occur in a particular installation. If this equipment does cause harmful interference to radio or television reception, which can be determined by turning the equipment off and on, the user is encouraged to try to correct the interference by one or more of the following measures

- Reorient or relocate the receiving antenna.
- Increase the separation between the equipment and receiver.
- Connect the equipment into an outlet on a circuit different from that to which the receiver is connected
- Consult the dealer or an experienced radio/TV technician for help.

FCC STATEMENT
This device complies with Part 15 of the FCC Rules. Its operation is subject to the following two conditions:
(1) This device may not cause harmful interference, and
(2) This device must accept any interference received, including interference that may cause undesired operation.

DÉCLARATION DE LA FCC
Cet appareil est conforme à la section 15 des réglementations de la FCC. Le fonctionnement de l'appareil est sujet aux deux conditions suivantes :
(1) cet appareil ne doit pas provoquer d'interférences néfastes, et
(2) cet appareil doit tolérer les interférences reçues, y compris celles qui risquent de provoquer un fonctionnement indésirable.

IC STATEMENT
This device complies with Industry Canada license-exempt RSS standard(s). Operation is subject to the following two conditions:
(1) This device may not cause interference, and
(2) This device must accept any interference, including interference that may cause undesired operation of the device.

DECLARATION DE L'IC
Cet appareil s'accorde avec Industrie Canada licence-exempte RSS standard. Le fonctionnement de l'appareil est sujet aux deux conditions suivantes :
(1) cet appareil ne doit pas provoquer d'interférences néfastes, et
(2) cet appareil doit tolérer les interférences reçues, y compris celles qui risquent de provoquer un fonctionnement indésirable.

Under Industry Canada regulations, this radio transmitter may only operate using an antenna of a type and maximum (or lesser) gain approved for the transmitter by Industry Canada. To reduce potential radio interference to other users, the antenna type and its gain should be so chosen that the equivalent isotropically radiated power (e.i.r.p.) is not more than that necessary for successful communication.

Conformément à la réglementation d'Industrie Canada, le présent émetteur radio peut fonctionner avec une antenne d'un type et d'un gain maximal (ou inférieur) approuvé pour l'émetteur par Industrie Canada. Dans le but de réduire les risques de brouillage radioélectrique à l'intention des autres utilisateurs, il faut choisir le type d'antenne et son gain de sorte que la puissance isotrope rayonnée équivalente (p.i.r.e.) ne dépasse pas l'intensité nécessaire à l'établissement d'une communication satisfaisante.

WARNING
TO REDUCE THE RISK OF FIRE OR ELECTRIC SHOCK, DO NOT EXPOSE THIS PRODUCT TO RAIN OR MOISTURE.

CAUTION
TO PREVENT ELECTRIC SHOCK, MATCH WIDE BLADE OF PLUG TO WIDE SLOT, FULLY INSERT.

THE LIGHTNING FLASH WITH ARROWHEAD SYMBOL, WITHIN AN EQUILATERAL TRIANGLE, IS INTENDED TO ALERT THE USER TO THE PRESENCE OF UNINSULATED "DANGEROUS VOLTAGE" WITHIN THE PRODUCT'S ENCLOSURE THAT MAYBE OF SUFFICIENT MAGNITUDE TO CONSTITUTE A RISK OF ELECTRIC SHOCK TO PERSONS.

THE EXCLAMATION POINT WITHIN AN EQUILATERAL TRIANGLE IS INTENDED TO ALERT THE USER TO THE PRESENCE OF IMPORTANT OPERATING AND MAINTENANCE (SERVICING) INSTRUCTIONS IN THE LITERATURE ACCOMPANYING THE APPLIANCE.

CAUTION
Changes or modifications to this equipment not expressly approved by NAD Electronics for compliance could void the user's authority to operate this equipment.

CAUTION REGARDING PLACEMENT
To maintain proper ventilation, be sure to leave a space around the unit (from the largest outer dimensions including projections) that is equal to or greater than shown below.

Left and Right Panels: 10 cm
Rear Panel: 10 cm
Top Panel: 10 cm

This equipment should be installed and operated with a minimum distance 20 cm between the radiator and your body.

NOTES ON ENVIRONMENTAL PROTECTION

At the end of its useful life, this product must not be disposed of with regular household waste but must be returned to a collection point for the recycling of electrical and electronic equipment. The symbol on the product, user's manual and packaging, point this out.

The materials can be reused in accordance with their markings. Through re-use, recycling of raw materials or other forms of recycling of old products, you are making an important contribution to the protection of our environment. Your local administrative office can advise you of the responsible waste disposal point.

INFORMATION ABOUT COLLECTION AND DISPOSAL OF WASTE BATTERIES (DIRECTIVE 2006/66/EC OF THE EUROPEAN PARLIAMENT AND THE COUNCIL OF EUROPEAN UNION) (FOR EUROPEAN CUSTOMERS ONLY)

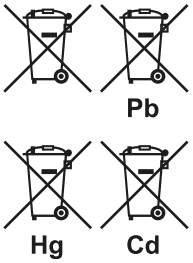

Batteries bearing any of these symbols indicate that they should be treated as "separate collection" and not as municipal waste. It is encouraged that necessary measures are implemented to maximize the separate collection of waste batteries and to minimize the disposal of batteries as mixed municipal waste.

End-users are exhorted not to dispose waste batteries as unsorted municipal waste. In order to achieve a high level of recycling waste batteries, discard waste batteries separately and properly through an accessible collection point in your vicinity. For more information about collection and recycling of waste batteries, please contact your local municipality, your waste disposal service or the point of sale where you purchased the items.

By ensuring compliance and conformance to proper disposal of waste batteries, potential hazardous effects on human health is prevented and the negative impact of batteries and waste batteries on the environment is minimized, thus contributing to the protection, preservation and quality improvement of the environment.

RECORD YOUR MODEL NUMBER (NOW, WHILE YOU CAN SEE IT)
The model and serial number of your new D 3020 are located on the back of the cabinet. For your future convenience, we suggest that you record these numbers here:

Model no: .....
Serial no.: .....

NAD is a trademark of NAD Electronics International, a division of Lenbrook Industries Limited
Copyright 2017, NAD Electronics International, a division of Lenbrook Industries Limited

UNPACKING AND SETUP

WHAT'S IN THE BOX

Packed with your D 3020 you will find:

- Detachable mains power cord
- AMP 3 remote control with 3V CR2025 battery
- 3.5mm plug to single RCA female adaptor
- Four pieces of dome-shaped feet
- Quick Setup Guide

SAVE THE PACKAGING

Please save the box and all the packaging in which your D 3020 arrived. Should you move or otherwise need to transport your D 3020, this is by far the safest container in which to do so. We've seen too many otherwise perfect components damaged in transit for lack of a proper shipping carton, so please: Save that box!

QUICK SETUP

This simple guide will help you get started with your D 3020.

Place the D 3020 on a firm, level surface. Do not place the unit on a soft surface like a carpet.

Make all the connections to your D 3020 with the unit unplugged from the mains power source. It is also advisable to power down or unplug all associated components while making or breaking any signal or AC power connections.

1 Connect applicable speakers to the LEFT and RIGHT SPEAKERS terminal of D 3020. These binding post connectors accept both bare wire and banana plugs.

2 Using applicable patch cords (not supplied), connect Source devices to corresponding input sockets of D 3020.
- S/PDIF sources: OPTICAL, COAXIAL
- Analog sources : AUX, PHONO

3 If you have a powered subwoofer, use the supplied 3.5mm plug to single RCA female adaptor connecting the 3.5mm plug to SUBW OUT and the single RCA female socket to a single RCA cord connected to the input of external subwoofer.

4 Connect corresponding end of the mains power cord to the AC mains input of the D 3020 and the plug connected to a mains power source.

5 With all Sources connected to D 3020 and powered up, tap ⏻ (Standby) to switch ON the D 3020 from standby mode. This is an amber colored touch sensitive switch on the top surface.

6 Press or tap repeatedly "**S**" until desired Source is highlighted. Rotate volume control to adjust audio level.

RESTORE D3020 TO FACTORY DEFAULT SETTINGS

Press and hold "BASS EQ" at the rear panel until D 3020 defaults to COAX source.

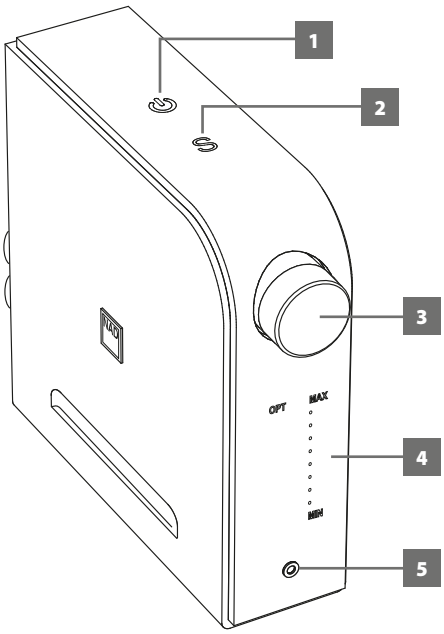

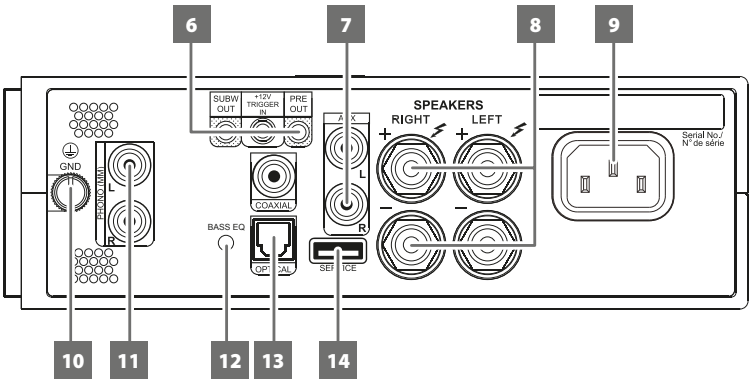

1 ⏻ (STANDBY)

- With the corresponding end of the mains power cord connected to the AC mains input of the D 3020 and the plug connected to a mains power source, press ⏻ (Standby) to switch ON the D 3020 from standby mode. The Standby indicator will turn from amber to bright color.
- Press and hold ⏻ (Standby) until D 3020 switches back to standby mode.

2 S (SOURCE)

- Use this function control to select desired Source. Press or tap repeatedly "**S**" until desired source is highlighted.

3 VOLUME

- Rotate Volume knob clockwise or counterclockwise to adjust audio level.
- Rotating the Volume knob will automatically restore audio from mute mode.

4 DISPLAY

- Sources, audio level and BASS indicators are shown.

IMPORTANT NOTE

Display will not adjust to the orientation of the unit. Display is best viewed with the D3020 in vertical position.

5 PHONES

- Use the 3.5 mm stereo jack socket for headphone listening.
- Specially designed low noise headphone circuitry can accommodate a wide range of phones, even 600 Ohm studio models.
- Adjust headphone audio level by rotating the VOLUME control clockwise or counterclockwise.
- Ensure that the volume control is turned to minimum (fully counter clockwise) before connecting or disconnecting headphones. Listening at high levels can damage your hearing.
- Inserting a headphone jack into this socket automatically switches off the speakers.

6 SUBW OUT/+12V TRIGGER IN/PRE-OUT

SUBW OUT

- Connect supplied 3.5mm plug to single RCA female adaptor – 3.5mm plug to SUBW OUT and the single RCA female socket to a single RCA connected to the input of powered ("active") subwoofer.
- Low frequency information up to 150 Hz is sent to the connected subwoofer.

+12V TRIGGER IN

- Connect this +12V Trigger input to the remote device's corresponding +12V DC output jack using a mono cable with 3.5mm male plug. The controlling device must be equipped with a +12V trigger output to use this feature.
- With this input triggered by a 12V DC supply, the D 3020 can be switched ON remotely from standby mode by compatible devices such as amplifiers, preamplifiers, receivers, etc. If the 12V DC supply is cut off, the D 3020 will return to standby mode.

PRE-OUT

- The PRE-OUT socket allows "daisy-chaining" - use more than one amplifier to add speakers to the same channel.
- Use applicable adaptor (3.5mm stereo plug to dual RCA cable) to connect PRE-OUT to the corresponding analog audio input of compatible devices such as amplifiers, receivers or other applicable devices.
- Rotate VOLUME control to adjust PRE-OUT output level.

7 AUX

- Use a twin RCA-to-RCA lead to connect these sockets to the left and right analog output of a CD player, preamplifier, processor or other applicable devices.

8 SPEAKERS

- Connect D 3020's Right speaker terminals marked "R +" and "R-" to the corresponding "+" and "-" terminals of your designated right speaker. Repeat the same for D 3020's Left speaker terminals and corresponding left speaker.

9 AC MAINS INPUT

- The D3020 comes supplied with a separate detachable mains power cord.
- Before connecting the plug to the mains power source, ensure that it is firmly connected to the D3020's AC Mains input socket.
- Always disconnect the mains power plug from the mains power source before disconnecting the cable from the D3020's AC Mains input socket.

10 GROUND TERMINAL

- Use this terminal to properly ground your D3020 to a grounded AC receptacle or a separate earth ground.
- The D3020 can be connected to ground by connecting a ground lead wire or similar to this ground terminal. After insertion, tighten the terminal to secure the lead.

NOTES

- *Consult with a licensed electrician to properly locate or correctly install a grounding conductor in your home. NAD is not responsible for any malfunction, damage or costs associated with the installation, connection or grounding of your D3020.*
- *The grounding wire is not supplied with your D3020.*

11 PHONO

- Input for a Moving Magnet (MM) phono cartridge.
- Connect the twin RCA lead from your turntable to this input if you are using a Moving Magnet cartridge.

12 BASS EQ

- Overall bass response is boosted by at least 6 dB. "BASS" is illuminated in the display with BASS EQ enabled.
- Toggle to enable or disable BASS EQ.

13 OPTICAL, COAXIAL

- Connect to the corresponding optical or coaxial digital output of sources such as CD or BD/DVD players, digital cable box, digital tuners and other applicable components.

IMPORTANT NOTE

The digital audio input is 24/192 capable and can accept PCM audio signal only. Ensure that the digital audio output of your source is set to PCM before connecting to the digital audio input of D 3020.

14 SERVICE

- Use this port only for firmware upgrade. Instructions on how to use this port for firmware upgrade is included in the D 3020 firmware upgrade (if any) procedure available from the NAD website.

AMP 3 REMOTE CONTROL

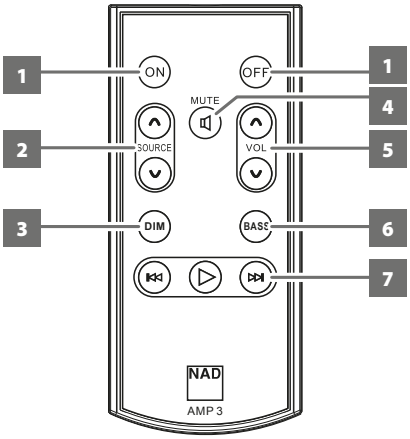

1 **ON:** Power up unit from Standby mode to operating mode.
OFF: Switch unit to Standby mode.

2 **SOURCE ∧/∨:** Select through source input selections.

3 **DIM:** Display brightness level is reduced or restored.

4 **MUTE:** Audio is temporarily switched off or restored. Mute mode is indicated by the blinking volume level icons (●). Rotate VOLUME knob or press VOLUME ∧/∨ to restore audio.

5 **VOLUME ∧/∨:** Increase or decrease loudness level.

6 **BASS:** Turn ON/OFF BASS EQ function.

7 **BLUETOOTH PLAYBACK CONTROL (applies to active Bluetooth connection):** Any or all of the following functions maybe applicable depending upon the Bluetooth device or source being played back.
► : Start/pause playback.
▶▶I : Skip forward to next song.
I◀◀ : Skip back to previous song.

BLUETOOTH AS A SOURCE

Initiate pairing of your Bluetooth device with D 3020 by following below procedure.

1. Using your iOS, Android or your Bluetooth device, go to Settings – Bluetooth and then scan for Bluetooth devices.
2. Select the unique device ID of your D 3020 among the available devices listed in your Bluetooth settings. Pair or connect together your D 3020 and Bluetooth device.
3. Upon successful pairing of your Bluetooth device and D 3020, select "BT" as a Source to listen to music stream from your Bluetooth device.

UNPAIR BLUETOOTH CONNECTION

Undertake below procedure to unpair or disconnect Bluetooth connection to D 3020.

1. While at operating mode, press and hold "▶" button of AMP 3 remote control until "BT" begins to flash in the front screen.
2. Release "▶" button as "BT" flashes for three times. Bluetooth connection is cleared and available again for pairing or connection.

ABOUT aptX®

A Bluetooth connection is a bit like a data pipeline between devices. Because the pipeline has a maximum width, it can sometimes be difficult to flow large audio files through it. aptX® enables CD-like quality wireless audio by solving the problem of sending the full music bandwidth over Bluetooth. aptX® reduces the size of the audio files so they can be squeezed through the wireless pipeline without affecting the sound quality. D3020 supports aptX®.

AUTO STANDBY

The D 3020 can be setup to automatically go to standby mode if there is no user interface interaction and no active Source input within 30 minutes. Auto standby mode can be enabled or disabled by the following steps.

ENABLE AUTO STANDBY MODE

- While at standby mode, press and hold "OFF" button of the AMP 3 remote control until all indicators in the front screen wake up and blink once.
- At operating mode and with auto standby enabled, the D 3020 will automatically go to standby mode if there is no user interface interaction and no active Source input within 30 minutes.

DISABLE AUTO STANDBY MODE

- While at standby mode, press and hold "OFF" button of the AMP 3 remote control until all indicators in the front screen wake up and blink twice.
- At operating mode and with auto standby disabled, D 3020 will not go to standby mode at any time unless directly initiated by pressing top panel's ⏻ (Standby) switch or OFF button of AMP 3 remote control.

AUTO SENSE

Auto sense feature enables the D 3020 to wake up from standby mode and starts operation by selecting OPTICAL source or the last digital source before going to standby mode.

CONDITIONS FOR AUTO SENSE

- For Auto Sense to work, Auto Standby must be set to ON with D 3020 going first to standby mode.
- If IR Learning with TV remote control is successfully completed and with D 3020 going to standby mode, auto sense is activated upon detection of active digital input only from OPTICAL input.
  - With this condition, D 3020 wakes up and automatically switches to OPT.
- If no IR Learning is conducted, auto sense is activated upon detection of active input from the last source (limited only to the digital sources) before the D 3020 goes to standby mode.
  - With this condition, D 3020 wakes up and automatically switches to the last selected digital source prior to the D 3020 going to standby mode.

ENABLE AUTO SENSE MODE

- While at standby mode, press and hold "SOURCE ∧" button of the AMP 3 remote control until ⏻ and **S** icons at the top screen wake up and blink once.

DISABLE AUTO SENSE MODE

- While at standby mode, press and hold "SOURCE ∧" button of the D 3020 remote control until ⏻ and **S** icons at the top screen wake up and blink twice.

OTHER FEATURES

TV CONNECT

TV Connect is a new software enabled feature that allows the D 3020 to provide the sound for your TV. TV Connect enables D 3020 to learn the mute and volume control commands from any TV remote control. Additionally, the D 3020 will automatically power up to OPTICAL source upon detection of digital TV output signal at OPTICAL input.*

With TV Connect fully integrated, you can use your TV remote control to manage the following features of D 3020:

1 Adjust Volume up/down
2 Enable or disable MUTE function
3 Switch ON D 3020

HOW TO CONFIGURE YOUR D 3020 WITH TV CONNECT

TV Connect setup requires the digital optical output of your TV to be connected to the OPTICAL input of your D 3020. With this setup and with proper configuration, when you turn ON your TV, the D 3020 powers up from standby mode and the TV input (OPTICAL) is automatically selected.* The D 3020 can also be awakened by pressing the top panel's ⏻ and the power ON button of either AMP 3 remote control or TV's remote control.

The following configurations are necessary to integrate TV Connect with your D 3020.

- Enable auto standby mode.
- Enable auto sense mode.
- Perform IR (infrared) learning with TV remote control.

ENABLE AUTO STANDBY MODE

- While at standby mode, press and hold "OFF" button of the AMP 3 remote control for a few seconds until all indicators on the front screen wake up and blink once.

ENABLE AUTO SENSE MODE

- While at standby mode, press and hold SOURCE ∧ button of the AMP 3 remote control until ⏻ and **S** icons at the top screen wake up and blink once.

PERFORM IR LEARNING WITH TV REMOTE CONTROL

a With D 3020 at operating mode, press and hold "🔇 MUTE" of AMP 3 remote control until "OPT" continuously blinks.
b Single press "Volume+" of TV remote control.
c After a one second gap, single press again "Volume +" of TV remote.
  - "OPT" quickly blinks twice and then moves on to "COAX" as it starts blinking to prepare learning "Volume - ".
  - Perform the same operation to learn "Volume-", "Mute" and "Power ON" respectively as per IR LEARNING PROCEDURE below.

d When the D 3020 successfully learns all four keys of TV remote control, it will automatically exit the learning mode and return to normal operation.

TURN OFF TV'S INTERNAL SPEAKERS (IF SO EQUIPPED)

It is recommended that you disable the TV's internal speakers so that only the D 3020 is heard. This setting is usually accessible from the TV's Setup Menu.

Consult your TV's Instruction Manual for instructions specific to your make and model of TV.

IR LEARNING PROCEDURE

STEP**	D 3020 SOURCE INDICATOR BLINKS	TV REMOTE CONTROL FUNCTION KEY TO PRESS	FUNCTION LEARNED BY D 3020 FROM TV REMOTE CONTROL
1	OPT	Volume +	Volume increases
2	COAX	Volume -	Volume decreases
3	AUX	Mute	Mute on/off
4	PHONO	Power ON	Switch to operating mode

* Dependent upon the D 3020 going first to standby mode after 30 minutes of inactivity.
** All four steps must be followed exactly to complete the IR Learning process.

DELETE IR LEARNED COMMANDS

Press and hold "🔇 MUTE" on AMP 3 remote control until "OPT" continuously blinks. Press and hold "🔇 MUTE" again until "OPT" stops blinking. All IR learned commands are now deleted.

FEET INSTALLATION GUIDE

The dome-shaped feet are supplied for optional installation. Install the feet as per suggested locations below. You may generate a template for proper placement of the feet.

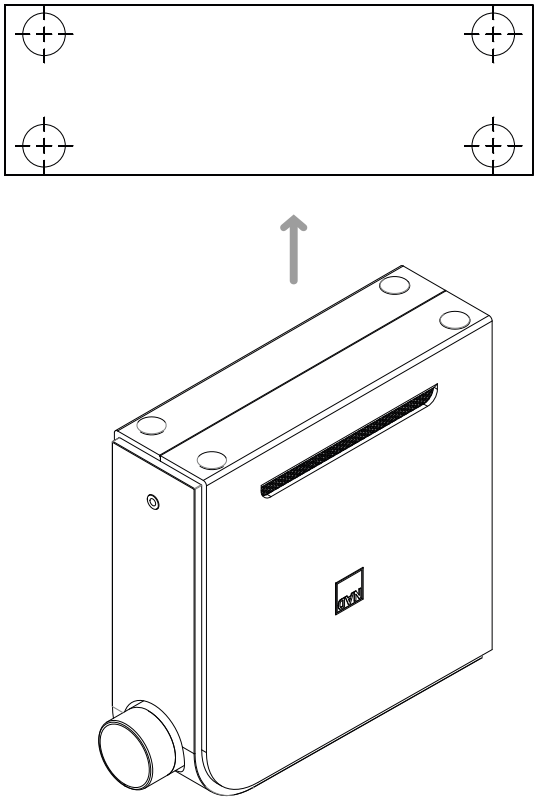

NOTES

- *The feet can only be installed in the format shown above.*
- *Ensure that with the feet installed, the D 3020 is stable, balanced and will not tip over.*

SPECIFICATIONS

All specs are measured according to IHF 202 CEA 490-AR-2008 standard. THD is measured using AP AUX 0025 passive filter and AES 17 active filter.

PREAMPLIFIER SECTION

LINE INPUT/PRE OUT

THD (20 Hz – 20 kHz)	<0.01 % at 2 V out
Signal-to-Noise Ratio	>106 dB (IHF, A-weighted, ref. 500 mV out, unity gain)
Channel separation	>80 dB (1 kHz)
	>70 dB (10 kHz)
Input impedance (R and C)	56 kohms + 100 pF
Maximum input signal	>5.5 Vrms (ref. 0.1 % THD)
Output impedance	200 ohms
Input sensitivity	113 mV (ref. 500 mV out, Volume maximum)
Frequency response	±0.2 dB (20 Hz - 20 kHz)
Maximum voltage output - IHF load	>4 V (ref. 0.1 % THD)
Bass EQ	6.0 dB at 80 Hz

PHONO INPUT/PRE OUT

THD (20 Hz – 20 kHz)	<0.015 % at 2V out
Signal-to-Noise Ratio	>82 dB (200 ohms source, A-weighted, ref. 500 mV out)
	>76 dB (MM cartridge source, IHF; A-weighted, ref. 500 mV out)
Input sensitivity	1.15 mV (ref. 500 mV out, Volume maximum)
Maximum input signal at 1kHz	>90 mVrms (ref. 0.1 % THD)
Frequency response	±0.3 dB (20 Hz - 20 kHz)
	Note: The RIAA response is consistent with a pre-emphasis that is rolled off at 50kHz by a second order filter, such as used in Neumann cutting lathes.

LINE INPUT/HEADPHONE OUT

Signal-to-Noise Ratio	>96 dB (32 ohms load; A-weighted, ref. 500mV out, unity gain)
Frequency response	±0.3 dB (20 Hz - 20 kHz)
Output impedance	100 ohms
Maximum headphone output	6.8 V (300 ohms load)

GENERAL SPECIFICATIONS

LINE INPUT/SPEAKER OUT

Continuous output power into 4 and 8 ohms	30 W (ref. 20 Hz-20 kHz at 0.1% THD, both channels driven)
THD (20 Hz – 20 kHz)	<0.01 % (at 1W, 4 and 8 ohms)
Signal-to-Noise Ratio	>98 dB (A-weighted, 500 mV input, ref. 2.828 V out in 4 ohms)
Clipping power	>50 W (at 1 kHz 4 ohms 0.1 % THD)
IHF dynamic power	8 ohms : 60 W
	4 ohms : 100 W
	2 ohms : 150 W
Peak output current	>18 A (in 1 ohm, 1 ms)
Damping factor	>300 (ref. 8 ohms, 20Hz to 6.5kHz)
Frequency response	±0.3 dB (20 Hz - 20 kHz)
Channel separation	>75 dB (1 kHz)
	>70 dB (10 kHz)
Input sensitivity	250 mV (for 30 W in 4 ohms)
Supports bit rate/sample rate	up to 24 bit/192 kHz
Standby power	<0.5 W

DIMENSION AND WEIGHT

Gross dimensions (W x H x D)	58 x 186 x 219 mm
	2 5⁄16 x 7 3⁄8 x 8 5⁄8 inches
Net weight	1.4 kg (3.1 lbs)
Shipping weight	2.1 kg (4.6 lbs)

* - Gross dimension includes volume knob and extended rear panel terminals.

NAD SHALL NOT BE HELD LIABLE FOR ANY TECHNICAL OR USER INTERFACE DISCREPANCIES IN THIS MANUAL. THE D 3020 OWNER'S MANUAL MAY BE SUBJECT TO CHANGE WITHOUT NOTICE. CHECK OUT WWW.NADELECTRONICS.COM FOR THE LATEST VERSION OF THE D 3020 OWNER'S MANUAL.

www.NADelectronics.com

©2017 NAD ELECTRONICS INTERNATIONAL
A DIVISION OF LENBROOK INDUSTRIES LIMITED

All rights reserved. NAD and the NAD logo are trademarks of NAD Electronics International, a division of Lenbrook Industries Limited.
No part of this publication may be reproduced, stored or transmitted in any form without the written permission of NAD Electronics International.
While every effort has been made to ensure the contents are accurate at the time of publication, features and specifications may be subject to change without prior notice.

D3020V2_ENG_OM_V11 - NOV 2017