Wi-Fi Waterproof Bullet Network Camera

Quick Start Guide

V1.0.0

Foreword

General

This Quick Start Guide (hereinafter referred to be "the Guide") introduces the functions, installation, and operations of the camera.

Safety Instructions

The following categorized signal words with defined meaning might appear in the Guide.

Signal Words	Meaning
WARNING	Indicates a medium or low potential hazard which, if not avoided, could result in slight or moderate injury.
CAUTION	Indicates a potential risk which, if not avoided, could result in property damage, data loss, lower performance, or unpredictable result.
NOTE	Provides additional information as the emphasis and supplement to the text.

Revision History

No.	Version	Revision Content	Release Time
1	V1.0.0	First Release.	August 11, 2018

Privacy Protection Notice

As the device user or data controller, you might collect personal data of others such as face, fingerprints, car plate number, Email address, phone number, GPS and so on. You need to be in compliance with the local privacy protection laws and regulations to protect the legitimate rights and interests of other people by implementing measures include but not limited to: providing clear and visible identification to inform data subject the existence of surveillance area and providing related contact.

About the Guide

The Guide is for reference only. If there is inconsistency between the Guide and the actual product, the actual product shall prevail.

We are not liable for any loss caused by the operations that do not comply with the Guide.

The Guide would be updated according to the latest laws and regulations of related regions. For detailed information, see the paper manual, CD-ROM, QR code or our official website. If there is inconsistency between paper manual and the electronic version, the electronic version shall prevail.

All the designs and software are subject to change without prior written notice. The product updates might cause some differences between the actual product and the Guide. Please contact the customer service for the latest program and supplementary documentation.

There still might be deviation in technical data, functions and operations description, or errors in print. If there is any doubt or dispute, please refer to our final explanation.

Upgrade the reader software or try other mainstream reader software if the Guide (in PDF format) cannot be opened.

All trademarks, registered trademarks and the company names in the Guide are the properties of their respective owners.

Please visit our website, contact the supplier or customer service if there is any problem occurred when using the device.

If there is any uncertainty or controversy, please refer to our final explanation.

Important Safeguards and Warnings

Electrical Safety

All installation and operation should conform to your local electrical safety codes.
The power source shall conform to the Safety Extra Low Voltage (SELV) standard, and supply power with rated voltage which conforms to Limited power Source requirement according to IEC60950-1. Please note that the power supply requirement is subject to the device label.
Make sure the power supply is correct before operating the device.
A readily accessible disconnect device shall be incorporated in the building installation wiring.
Prevent the power cable from being trampled or pressed, especially the plug, power socket and the junction extruded from the device.

Environment

Do not aim the device at strong light to focus, such as lamp light and sun light; otherwise it might cause over brightness or light marks, which are not the device malfunction, and affect the longevity of Complementary Metal-Oxide Semiconductor (CMOS).
Do not place the device in a damp or dusty environment, extremely hot or cold temperatures, or the locations with strong electromagnetic radiation or unstable lighting.
Keep the device away from any liquid to avoid damage to the internal components.
Keep the indoor device away from rain or damp to avoid fire or lightning.
Keep sound ventilation to avoid heat accumulation.
Transport, use and store the device within the range of allowed humidity and temperature.
Heavy stress, violent vibration or water splash are not allowed during transportation, storage and installation.
Pack the device with standard factory packaging or the equivalent material when transporting the device.
Install the device in the location where only the professional staff with relevant knowledge of safety guards and warnings can access. The accidental injury might happen to the non-professionals who enter the installation area when the device is operating normally.

Operation and Daily Maintenance

Do not touch the heat dissipation component of the device to avoid scald.
Carefully follow the instructions in the Guide when performing any disassembly operation about the device; otherwise, it might cause water leakage or poor image quality due to unprofessional disassemble. Please contact after-sale service for desiccant replacement if there is condensed fog found on the lens after unpacking or when the desiccant turns green. (Not all models are included with the desiccant).
It is recommended to use the device together with lightning arrester to improve lightning protection effect.
It is recommended to ground the device to enhance reliability.

Do not touch the image sensor directly (CMOS). Dust and dirt could be removed with air blower, or you can wipe the lens gently with soft cloth that moistened with alcohol.

Device body can be cleaned with soft dry cloth, which can also be used to remove stubborn stains when moistened with mild detergent. To avoid possible damage on device body coating which could cause performance decrease, do not use volatile solvent such as alcohol, benzene, diluent and so on to clean the device body, nor can strong, abrasive detergent be used.

Dome cover is an optical component, do not touch or wipe the cover with your hands directly during installation or operation. For removing dust, grease or fingerprints, wipe gently with moisten oil-free cotton with diethyl or moisten soft cloth. You can also air blower to remove dust.

Please strengthen the protection of network, device data and personal information by adopting measures which include but not limited to using strong password, modifying password regularly, upgrading firmware to the latest version, and isolating computer network. For some device with old firmware versions, the ONVIF password will not be modified automatically along with the modification of the system password, and you need to upgrade the firmware or manually update the ONVIF password.

Use standard components or accessories provided by manufacturer and make sure the device is installed and maintained by professional engineers.

The surface of the image sensor should not be exposed to laser beam radiation in an environment where a laser beam device is used.

Do not provide two or more power supply sources for the device unless otherwise specified. A failure to follow this instruction might cause damage to the device.

Regulatory Information

The regulatory information herein might vary according to the model you purchased. Some information is only applicable for the country or region where the product is sold.

FCC Information

CAUTION

Changes or modifications not expressly approved by the party responsible for compliance could void the user's authority to operate the equipment.

FCC conditions:

This device complies with part 15 of the FCC Rules. Operation is subject to the following two conditions:

This device may not cause harmful interference.

This device must accept any interference received, including interference that may cause undesired operation.

FCC compliance:

This equipment has been tested and found to comply with the limits for a digital device, pursuant to part 15 of the FCC Rules. This equipment generate, uses and can radiate radio frequency energy and, if not installed and used in accordance with the instructions, may cause harmful interference to radio communication.

For class B device, these limits are designed to provide reasonable protection against harmful interference in a residential installation. However, there is no guarantee that interference will not occur in a particular installation. If this equipment does cause harmful interference to radio or television reception, which can be determined by turning the equipment off and on, the user is encouraged to try to correct the interference by one or more of the following measures:

- Reorient or relocate the receiving antenna.
- Increase the separation between the equipment and receiver.
- Connect the equipment into an outlet on a circuit different from that to which the receiver is connected.
- Consult the dealer or an experienced radio/TV technician for help.

This equipment complies with FCC radiation exposure limits set forth for an uncontrolled environment. This equipment should be installed and operated with minimum distance 20cm between the radiator & your body.

Table of Contents

Foreword I
Important Safeguards and Warnings III
Regulatory Information V
1 Introduction 1
2 Network Configuration 2
2.1 Initializing Device 2
2.2 Modifying Device IP Address 3
2.3 Logging in Web Interface 4
2.4 Operation with Remote Monitoring App 5
3 Installation 7
3.1 Packing List 7
3.2 Dimension 7
3.3 Installing Device 7
3.3.1 Installation Type 7
3.3.2 Installing SD Card (optional) 9
3.3.3 Attaching Device 9
3.3.4 Installing Waterproof Connector (Optional) 11
3.3.5 Adjusting Lens Angle 12

1 Introduction

- Cable type might vary with different devices, and the actual product shall prevail.
- Waterproof all the cable joints with insulating tape and waterproof tape to avoid short circuit and water damage. For the detailed operation, see the *FAQ manual*.

Figure 1-1 Cable list

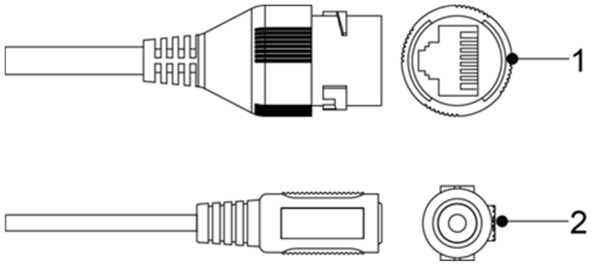

For more information about cable ports, see Table 1-1, and for the pattern of the LED Indicator, see Table 1-2.

Table 1-1 Cable information

No.	Port Name	Function
1	Ethernet port	Connects to network with network cable.
2	12V DC power input	Inputs 12V DC power. Please be sure to supply power as instructed in the Guide. Device abnormity or damage could occur if power is not supplied correctly.

Table 1-2 LED indicator description

LED Indicator Status	Device Status
Red light on	● Booting ● Device malfunction ● Failed to boot up
Green light flashing	Waiting for Wi-Fi network
Green light on	Operating properly
Green light quick flashing	WPS mode
Green and Red light flashing alternately	Firmware updating

2 Network Configuration

Device initialization and IP address setting can be finished with the "ConfigTool" or in web interface. For more information, see the *WEB operation manual*.

- Device initialization is available on select models, and it is required at first use or after the device being reset.
- Device initialization is available only when the IP addresses of the device (192.168.1.108 by default) and the PC stay in the same network segment.
- Plan useable network segment properly to connect the device to the network.
- The following figures and interfaces are for reference only, and the actual product shall prevail.

2.1 Initializing Device

Step 1 Double-click "ConfigTool.exe" to open the tool.

Step 2 Click .

The **Modify IP** interface is displayed. See Figure 2-1.

Figure 2-1 Modify IP

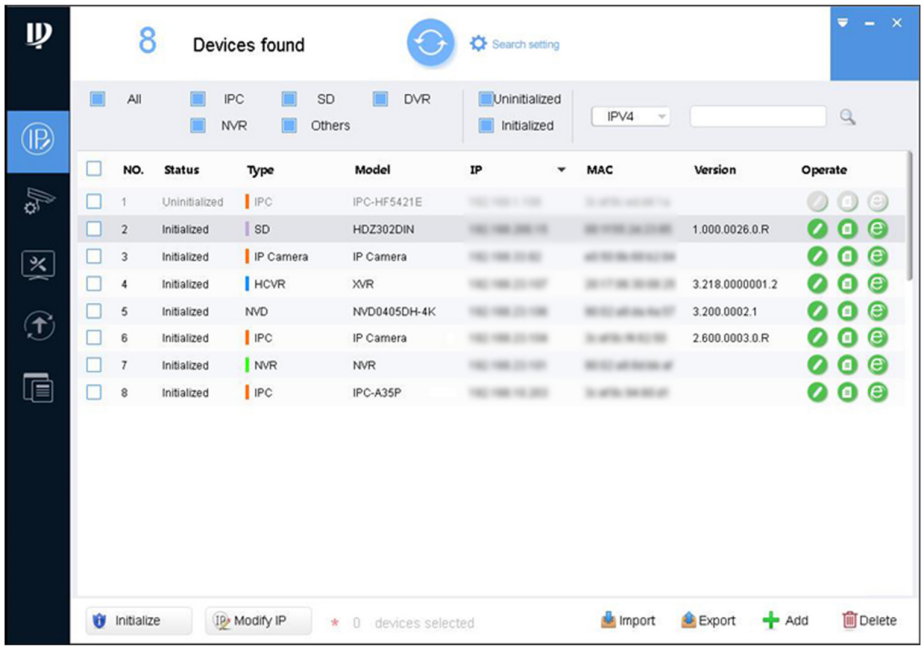

Step 3 Click Search setting.

The **Setting** interface is displayed.

Step 4 Enter the start IP address and end IP address of the network segment in which you want to search devices, and then click **OK**.

All the devices found in the network segment are listed.

Step 5 Select one or several devices with **Status** shows **Uninitialized**, and then click **Initialize**.

The **Device initialization** interface is displayed.

Step 6 Select the devices that need initialization, and then click **Initialize**.

The password setting interface is displayed. See Figure 2-2.

Figure 2-2 Password setting

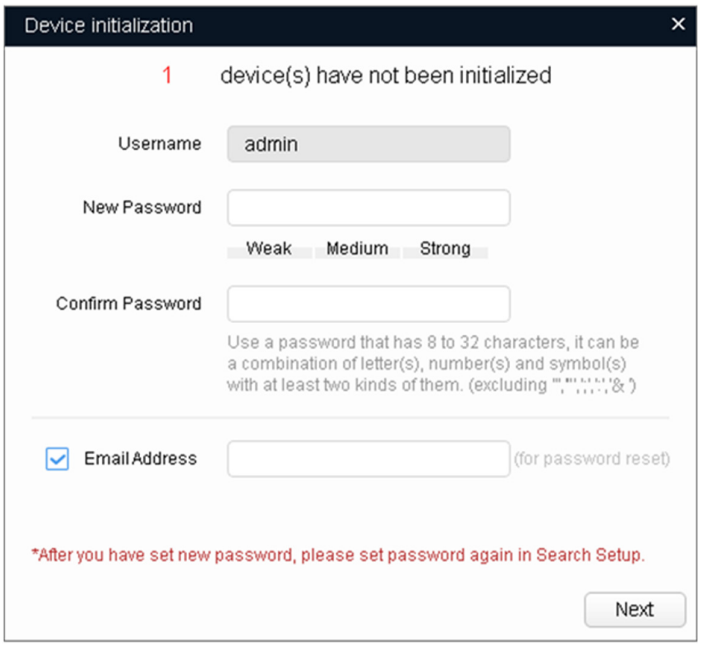

Step 7 Set and confirm the password of the devices, then enter a valid email address, and then click **Next**.

The final setting interface is displayed.

Password can be modified or reset in **System Settings**.

Step 8 Select the options according to your needs, and then click **OK**.

The **Initialization** interface is displayed after initialization is completed. Click the success icon (✓) or the failure icon (⚠) for the details.

Step 9 Click **Finish**.

The device status in the **Modify IP** interface (Figure 2-1) turns to **Initialized**.

2.2 Modifying Device IP Address

- You can modify IP address of one or multiple devices in one time. This section is based on modifying IP addresses in batch.
- Modifying IP addresses in batch is available only when the corresponding devices have the same login password.

Step 1 Do "Step 1" to "Step 4" in "2.1 Initializing Device" to search devices in your network segment.

After clicking **Search setting**, enter the username and password, and please make sure they are the same as what you set during initialization, otherwise there will be "wrong password" notice.

Step 2 Select the devices which IP addresses need to be modified, and then click **Modify IP**.

The **Modify IP Address** interface is displayed. See Figure 2-3.

Figure 2-3 Modify IP Address

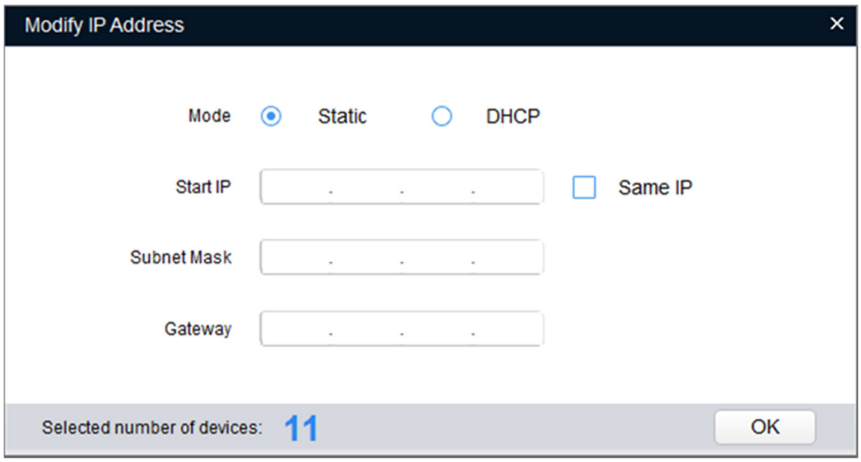

Step 3 Select **Static** mode, and then enter start IP, subnet mask, and gateway.

- IP addresses of multiple devices will be set to the same if you select the **Same IP** checkbox.
- If DHCP server is available in the network, devices will automatically obtain IP addresses from DHCP server when you select **DHCP**.

Step 4 Click **OK**.

2.3 Logging in Web Interface

Step 1 Open IE browser, then enter the IP address of the device in the address bar, and then press Enter.

If the setup wizard is displayed, finish the settings as instructed.

Step 2 Enter the user name and password in the log in box, and then click **Login**.

Step 3 For first time login, click **Click Here to Download Plugin**, and then install the plugin as instructed.

The main interface is displayed when the installation is finished. See Figure 2-4.

Figure 2-4 Main interface

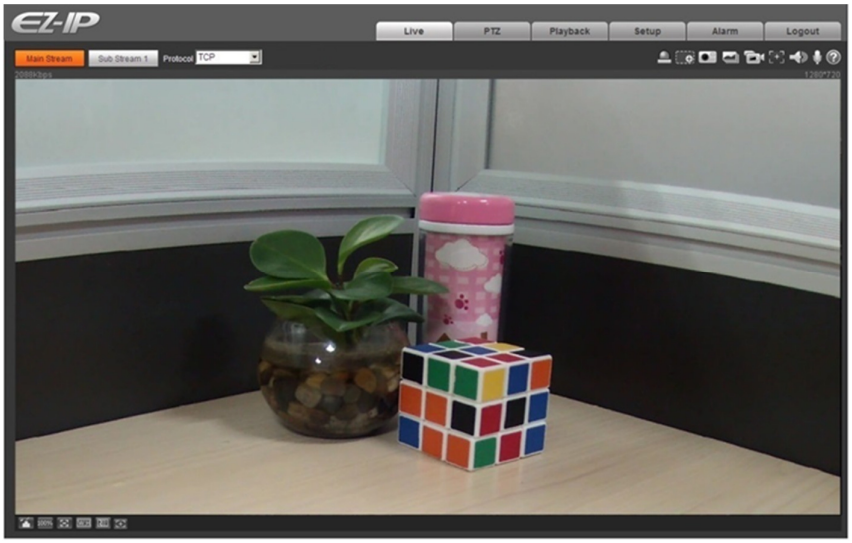

2.4 Operation with Remote Monitoring App

You can download the remote monitoring app and add your camera to the app to perform remote monitor on your phone.

Step 1 Download and install the "iDMSS Plus" app from App Store or the "gDMSS Plus" app from Google Play.

Step 2 Run the app, and then select **Camera** at the home interface.
The **Live Preview** interface is displayed.

Step 3 Tap the **+** sign, and then tap **Add Device**.
The **Add Device** interface is displayed. See Figure 2-5.

Figure 2-5 Add Device

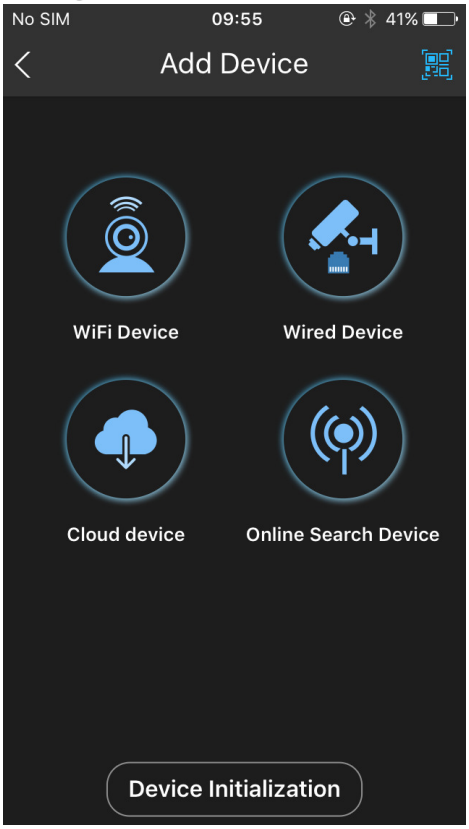

Step 4 You can scan the QR code or select other connection type to add the camera. For the detailed configuration, see the corresponding users' manual.

Step 5 After adding camera is finished, tap **Start Live Preview**, and then the live preview is displayed. See Figure 2-6.

Figure 2-6 Live preview

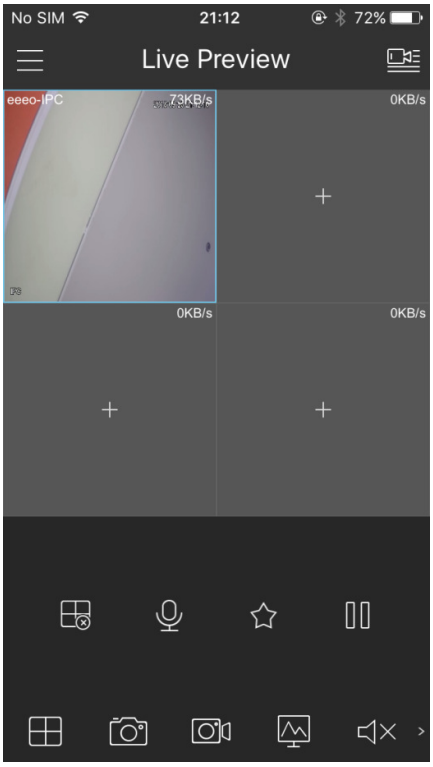

3 Installation

3.1 Packing List

- The tool required for the installation such as electric drill is not provided in the packing.
- The operation manual and related tool are contained in the disk or the QR code, and the actual packing shall prevail.

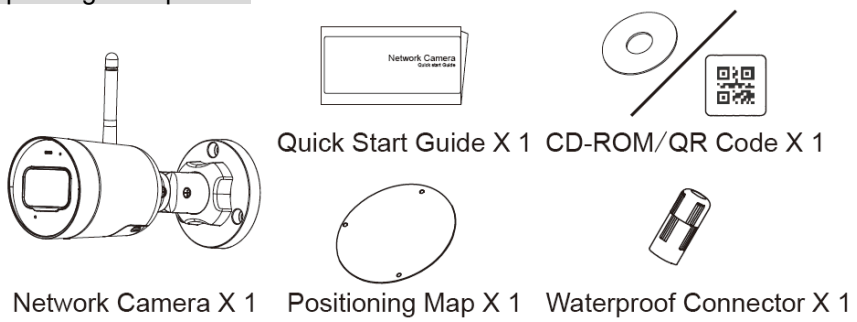

3.2 Dimension

Following figures are for reference only, and the actual product shall prevail.

Device dimension (mm [inch])

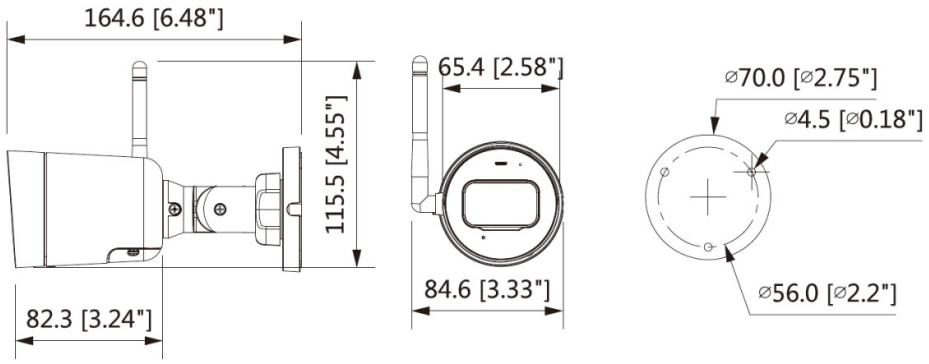

3.3 Installing Device

3.3.1 Installation Type

Keep the antenna perpendicular to the ground to ensure optimal reception.

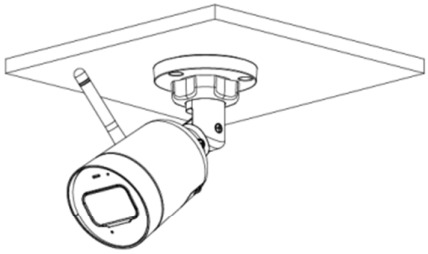

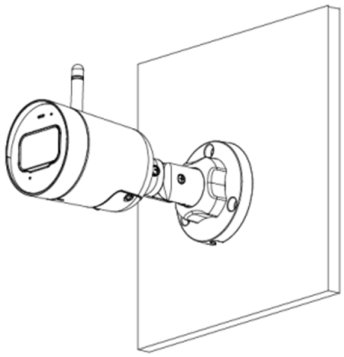

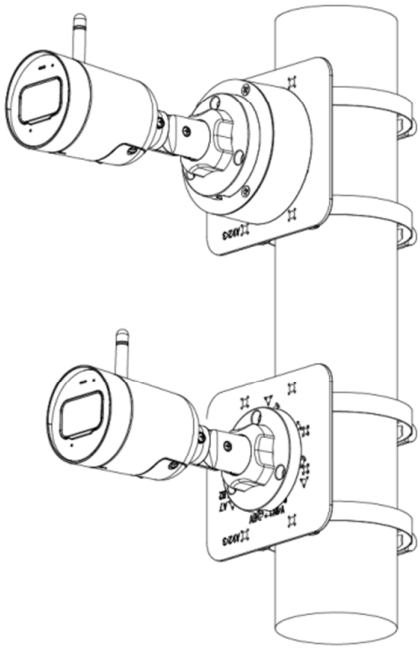

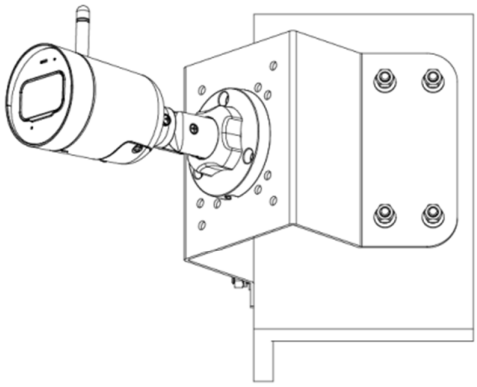

3.3.2 Installing SD Card (optional)

Press the reset button to start WPS pairing; press and hold the reset button for 10 s to reset the camera to factory settings.

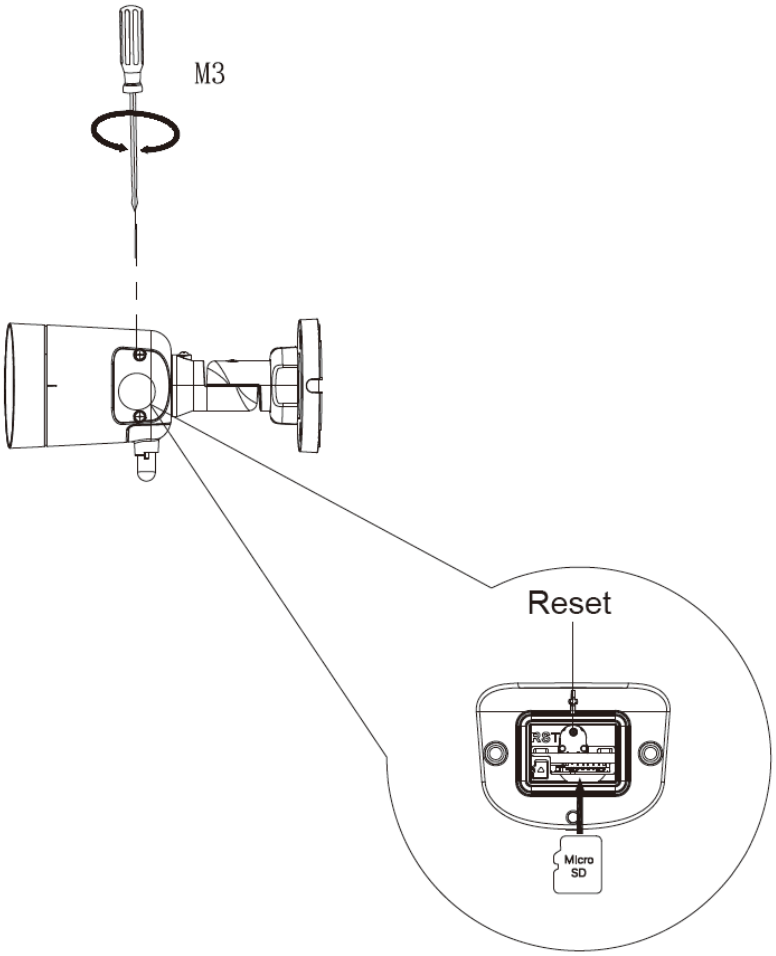

3.3.3 Attaching Device

Make sure the mounting surface is strong enough to hold at least three times of the weight of the device and bracket.

Cable going through the mounting surface

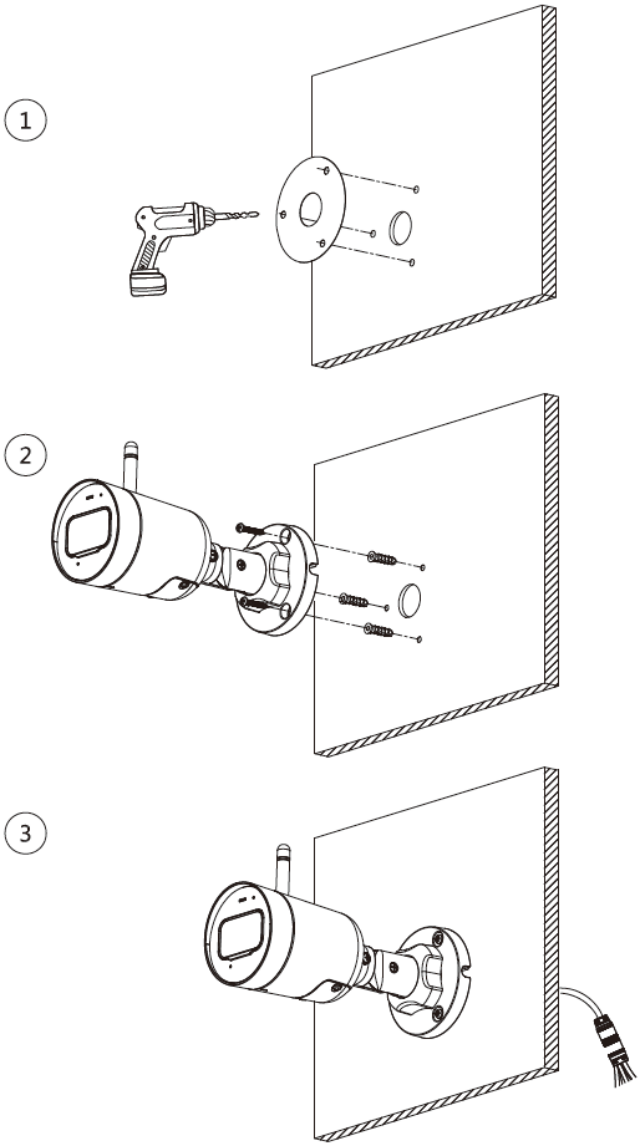

Cable going through the side cable tray

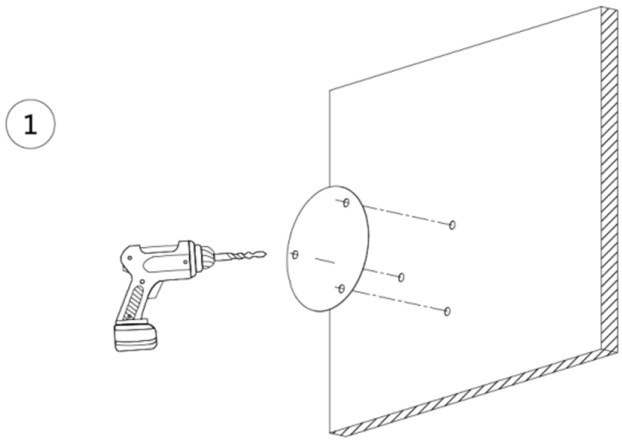

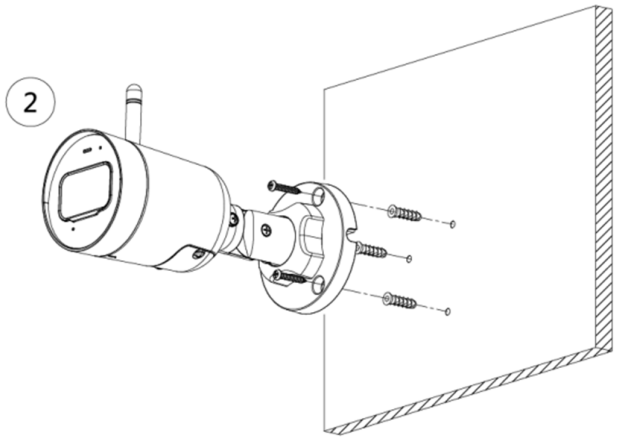

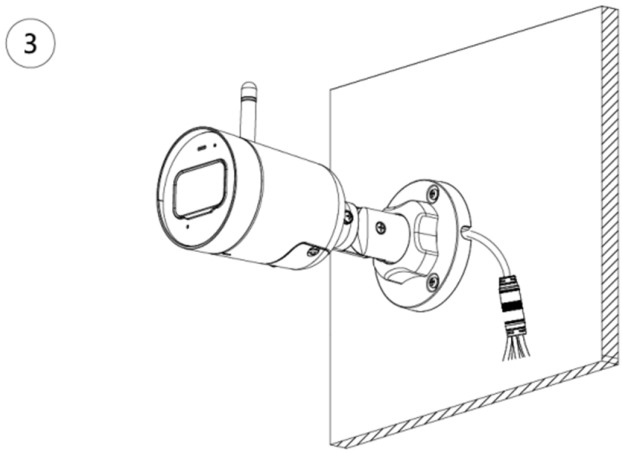

3.3.4 Installing Waterproof Connector (Optional)

This part is needed only when there is waterproof connector come with the device and the device is used outdoor.

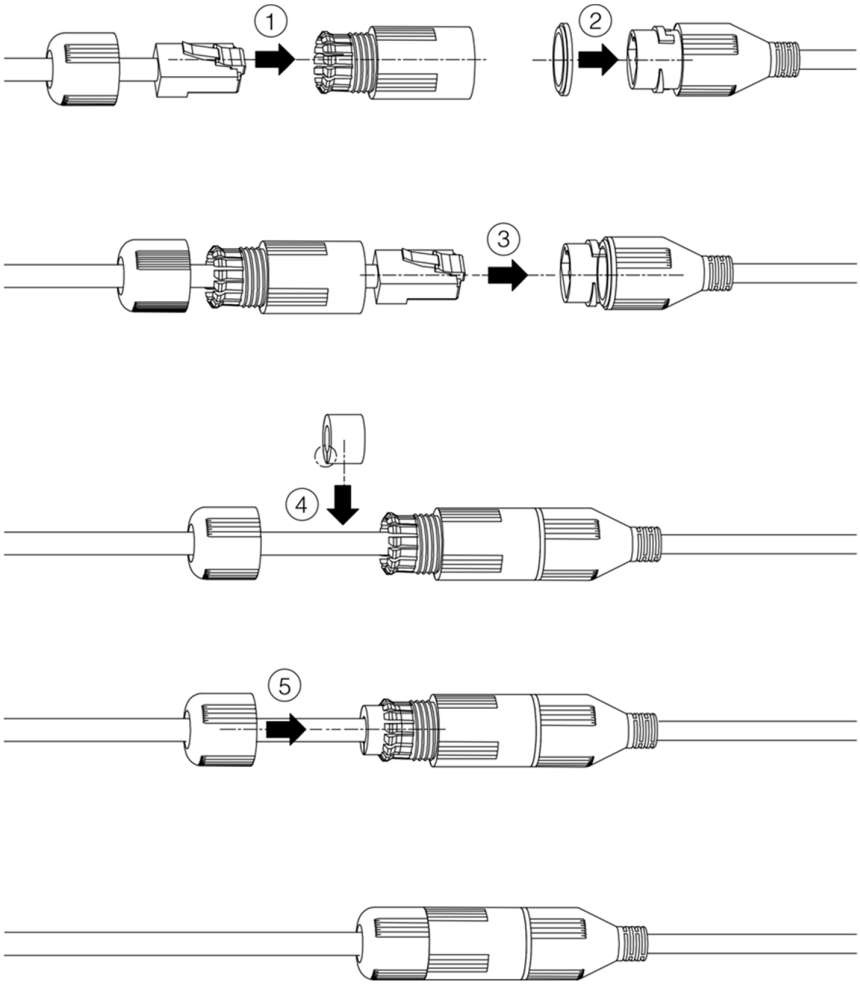
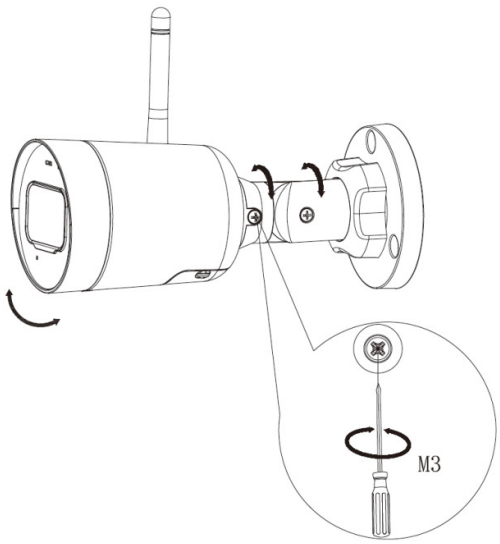
3.3.5 Adjusting Lens Angle