Eyeball Network Camera

Quick Start Guide

ZHEJIANG DAHUA VISION TECHNOLOGY CO., LTD. V1.0.0

Foreword

General

This manual introduces the installation and operations of network camera. Read carefully before using the device, and keep the manual safe for future reference.

Safety Instructions

The following signal words might appear in the manual.

Signal Words	Meaning
WARNING	Indicates a medium or low potential hazard which, if not avoided, could result in slight or moderate injury.
CAUTION	Indicates a potential risk which, if not avoided, could result in property damage, data loss, lower performance, or unpredictable result.
NOTE	Provides additional information as a supplement to the text.

Revision History

Version	Revision Content	Release Date
V1.0.0	First release.	May 2022

Privacy Protection Notice

As the device user or data controller, you might collect the personal data of others such as their face, fingerprints, and license plate number. You need to be in compliance with your local privacy protection laws and regulations to protect the legitimate rights and interests of other people by implementing measures which include but are not limited: Providing clear and visible identification to inform people of the existence of the surveillance area and provide required contact information.

About the Manual

- The manual is for reference only. Slight differences might be found between the manual and the product.
- We are not liable for losses incurred due to operating of the product in ways that are not in compliance with the manual.
- The manual will be updated according to the latest laws and regulations of related jurisdictions. For detailed information, see the paper User Manual, use our CD-ROM, scan the QR code or visit our official website. The manual is for reference only. Slight differences might be found between the electronic version and the paper version.
- All the designs and software are subject to change without prior written notice. Product updates might result in some differences appearing between the actual product and the manual. Please contact customer service for the latest program and supplementary documentation.
- There might be deviations in the description of the technical data, functions and operations, or errors in the print. If there is any doubt or dispute, we reserve the right of final explanation.

- Upgrade the reader software or try other mainstream reader software if the manual (in PDF format) cannot be opened.
- All trademarks, registered trademarks and the company names in the manual are the properties of their respective owners.
- Please visit our website, contact the supplier or customer service if any problems occur while using the device.
- If there is any uncertainty or controversy, we reserve the right of final explanation.

Important Safeguards and Warnings

This section introduces content covering the proper handling of the device, hazard prevention, and prevention of property damage. Read carefully before using the device, comply with the guidelines when using it.

Transportation Requirements

- Transport the device under allowed humidity and temperature conditions.
- Pack the device with packaging provided by its manufacturer or packaging of the same quality before transporting it.
- Do not place heavy stress on the device, violently vibrate or immerse it in liquid during transportation.

Storage Requirements

- Store the device under allowed humidity and temperature conditions.
- Do not place the device in a humid, dusty, extremely hot or cold site that has strong electromagnetic radiation or unstable illumination.
- Do not place heavy stress on the device, violently vibrate or immerse it in liquid during storage.

Installation Requirements

WARNING

- Strictly comply with the local electrical safety codes and standards, and check whether the power supply is correct before operating the device.
- Please follow the electrical requirements to power the device.
  - When selecting the power adapter, the power supply must conform to the requirements of ES1 in IEC 62368-1 standard and be no higher than PS2. Please note that the power supply requirements are subject to the device label.
  - We recommend using the power adapter provided with the device.
- Do not connect the device to two or more kinds of power supplies, unless otherwise specified, to avoid damage to the device.
- The device must be installed in a location that only professionals can access, to avoid the risk of non-professionals becoming injured from accessing the area while the device is working. Professionals must have full knowledge of the safeguards and warnings of using the device.

- Do not place heavy stress on the device, violently vibrate or immerse it in liquid during installation.
- An emergency disconnect device must be installed during installation and wiring at a readily accessible location for emergency power cut-off.
- We recommend you use the device with a lightning protection device for stronger protection

against lightning. For outdoor scenarios, strictly comply with the lightning protection regulations.

- Ground the function earthing portion ⏚ of the device to improve its reliability (certain models are not equipped with earthing holes). The device is a class I electrical appliance. Make sure that the power supply of the device is connected to a power socket with protective earthing.
- The dome cover is an optical component. Do not directly touch or wipe the surface of the cover during installation.

Operation Requirements

WARNING

- The cover must not be opened while the device is powered on.
- Do not touch the heat dissipation component of the device to avoid the risk of getting burnt.

- Use the device under allowed humidity and temperature conditions.
- Do not aim the device at strong light sources (such as lamplight, and sunlight) when focusing it, to avoid reducing the lifespan of the CMOS sensor, and causing overbrightness and flickering.
- When using a laser beam device, avoid exposing the device surface to laser beam radiation.
- Prevent liquid from flowing into the device to avoid damage to its internal components.
- Protect indoor devices from rain and dampness to avoid electric shocks and fires breaking out.
- Do not block the ventilation opening near the device to avoid heat accumulation.
- Protect the line cord and wires from being walked on or squeezed particularly at plugs, power sockets, and the point where they exit from the device.
- Do not directly touch the photosensitive CMOS. Use an air blower to clean the dust or dirt on the lens.
- The dome cover is an optical component. Do not directly touch or wipe the surface of the cover when using it.
- There might be a risk of electrostatic discharge on the dome cover. Power off the device when installing the cover after the camera finishes adjustment. Do not directly touch the cover and make sure the cover is not exposed to other equipment or human bodies
- Strengthen the protection of the network, device data and personal information. All necessary safety measures to ensure the network security of the device must be taken, such as using strong passwords, regularly changing your password, updating firmware to the latest version, and isolating computer networks. For the IPC firmware of some previous versions, the ONVIF password will not be automatically synchronized after the main password of the system has been changed. You need to update the firmware or change the password manually.

Maintenance Requirements

- Strictly follow the instructions to disassemble the device. Non-professionals dismantling the device can result in it leaking water or producing poor quality images. For a device that is required to be disassembled before use, make sure the seal ring is flat and in the seal groove when putting the cover back on. When you find condensed water forming on the lens or the desiccant becomes green after you disassembled the device, contact after-sales service to replace the desiccant. Desiccants might not be provided depending on the actual model.

- Use the accessories suggested by the manufacturer. Installation and maintenance must be performed by qualified professionals.
- Do not directly touch the photosensitive CMOS. Use an air blower to clean the dust or dirt on the lens. When it is necessary to clean the device, slightly wet a soft cloth with alcohol, and gently wipe away the dirt.
- Clean the device body with a soft dry cloth. If there are any stubborn stains, clean them away with a soft cloth dipped in a neutral detergent, and then wipe the surface dry. Do not use volatile solvents such as ethyl alcohol, benzene, diluent, or abrasive detergents on the device to avoid damaging the coating and degrading the performance of the device.
- The dome cover is an optical component. When it is contaminated with dust, grease, or fingerprints, use degreasing cotton moistened with a little ether or a clean soft cloth dipped in water to gently wipe it clean. An air gun is useful for blowing dust away.
- It is normal for a camera made of stainless steel to develop rust on its surface after being used in a strong corrosive environment (such as the seaside, and chemical plants). Use an abrasive soft cloth moistened with a little acid solution (vinegar is recommended) to gently wipe it away. Afterwards, wipe it dry.

Table of Contents

Foreword I
Important Safeguards and Warnings III
1 Introduction 1
1.1 Cable 1
1.2 LED Status 1
2 Network Configuration 2
2.1 Initializing the Camera 2
2.2 Changing the Device IP Address 3
2.3 Logging in to Web Page 4
3 Operating with DMSS 5
4 Installation 7
4.1 Packing List 7
4.2 Dimensions 7
4.3 Installing Camera 8
4.3.1 Installation Method 8
4.3.2 Installing SD Card 8
4.3.3 Attaching Camera 8
4.3.4 (Optional) Installing Waterproof Connector 10
4.3.5 Adjusting Lens Angle 11

1 Introduction

1.1 Cable

Waterproof all the cable joints with insulating tape and waterproof tape to avoid water damage and prevent short circuits from occurring. For details, see the FAQ manual.

Figure 1-1 Cables

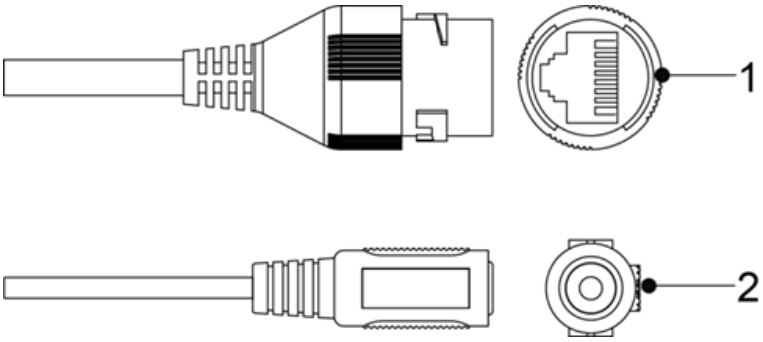

Table 1-1 Cable information

No.	Port Name	Description
1	Ethernet port	Connects to the network through a network cable. Do not connect both network cable and Wi-Fi at the same time.
2	Power port	Inputs 12 VDC power. Be sure to supply power as instructed in the manual. The device might become damaged or behave abnormally if power is not correctly supplied.

1.2 LED Status

Table 1-2 LED status

LED Status	Device Status
Solid green	Working properly.
Solid red	• Starting/Restarting. • Resetting to factory default.
Slowly flashing red	Network disconnected.
Flashing red and green	Updating firmware.

2 Network Configuration

Device initialization and IP configurations can all be managed with the ConfigTool or through the web page. For more information, see the web operation manual.

- Device initialization is available on select models, and is required at first-time use and after the device is reset.
- Device initialization is available only when the IP addresses of the device (192.168.1.108 by default) and the computer are on the same network segment.
- Carefully plan the network segment to connect the device to.
- The following figures and pages are for reference only.

2.1 Initializing the Camera

Step 1 Search for the device that needs to be initialized through ConfigTool.

1. Double-click **ConfigTool.exe** to open the tool.
2. Click **Modify IP**.
3. Select the searching way, and then click **OK.**
4. Select one or several uninitialized cameras, and then click **Initialize**.

Step 2 Select the devices to be initialized, and then click **Initialize**.

If you do not provide the email address for password reset, you can reset the password only through XML file.

Figure 2-1 Password setting

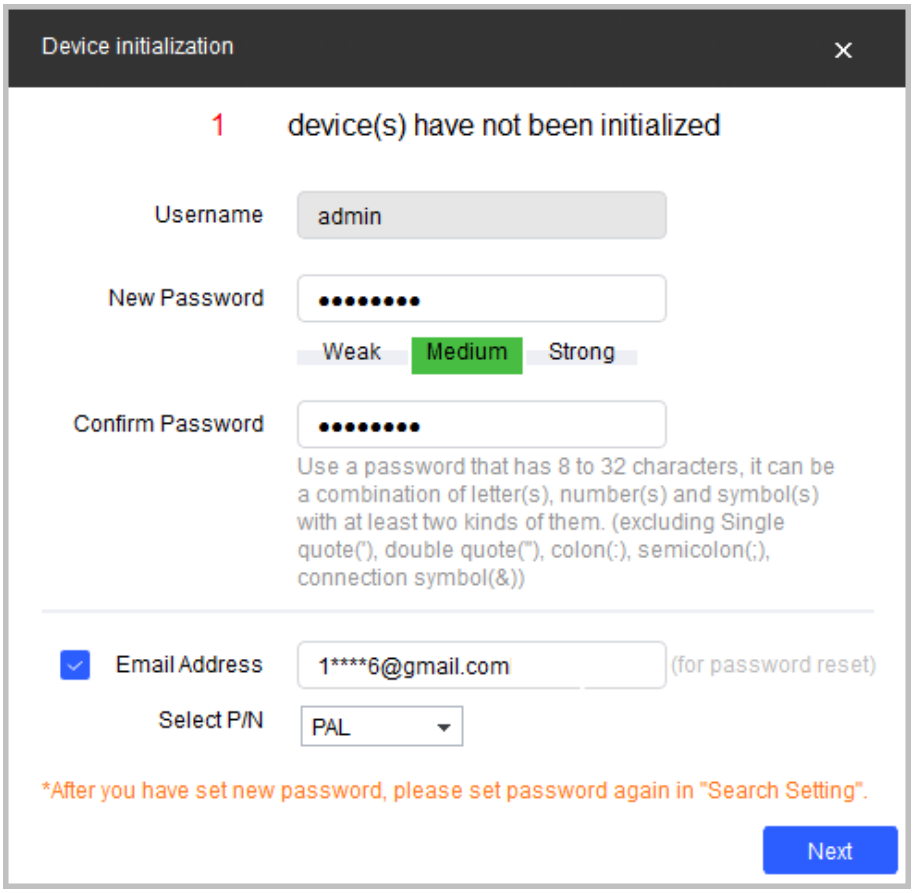

Step 3 Set and confirm the password of the devices, enter a valid email address, and then click **Next**.

Step 4 Select **Auto-check for updates** as needed, and then Click **OK** to initialize the device. If initialization failed, click ⚠ to see more information.

Step 5 Click **Finish**.

2.2 Changing the Device IP Address

- You can change the IP address of one or more devices at a time. This section is based on changing IP addresses in batches.
- Changing IP addresses in batches is available only when the corresponding devices have the same login password.

Step 1 Search for the device whose IP address needs to be changed through ConfigTool.

1. Double-click ConfigTool.exe to open the tool.
2. Click **Modify IP**.
3. Select the searching way, enter the username and password, and then click **OK**.

The username is **admin**, and the password is the one you set while initializing the device.

Step 2 Select the devices whose IP addresses need to be changed, and then click **Modify IP**.

Step 3 Configure IP address.

- **Static** mode: When you select **Static**, you need to enter **Start IP**, **Subnet Mask**, and **Gateway**. The IP addresses of the devices will be modified successively starting from the first IP entered.
- **DHCP** mode: If the DHCP server is available in the network, when you select **DHCP**, the IP address of devices will be automatically obtained through the DHCP server.

The same IP address will be set for multiple devices if you select the **Same IP** checkbox.

Step 4 Click **OK**.

2.3 Logging in to Web Page

Step 1 Open IE browser, enter the IP address of the device in the address bar, and then press the Enter key.

If the setup wizard is displayed, finish the settings as instructed.

Step 2 Enter the username and password in the login box, and then click **Login**.

The home page is displayed when the installation is finished.

For the first-time login, click **Click Here to Download Plugin**, and then install the plugin as instructed.

3 Operating with DMSS

Make sure that there are no obstacles and electromagnetic interference between the device and the router for best possible wireless performance.

Step 1 Add the device.

1) Tap **+** button on the upper-right corner of the DMSS home page to scan the QR code on the camera. If your DMSS fails to scan the QR code, tap **Manually enter SN**.
2) Select **Wireless Camera**.

Figure 3-1 Add the device

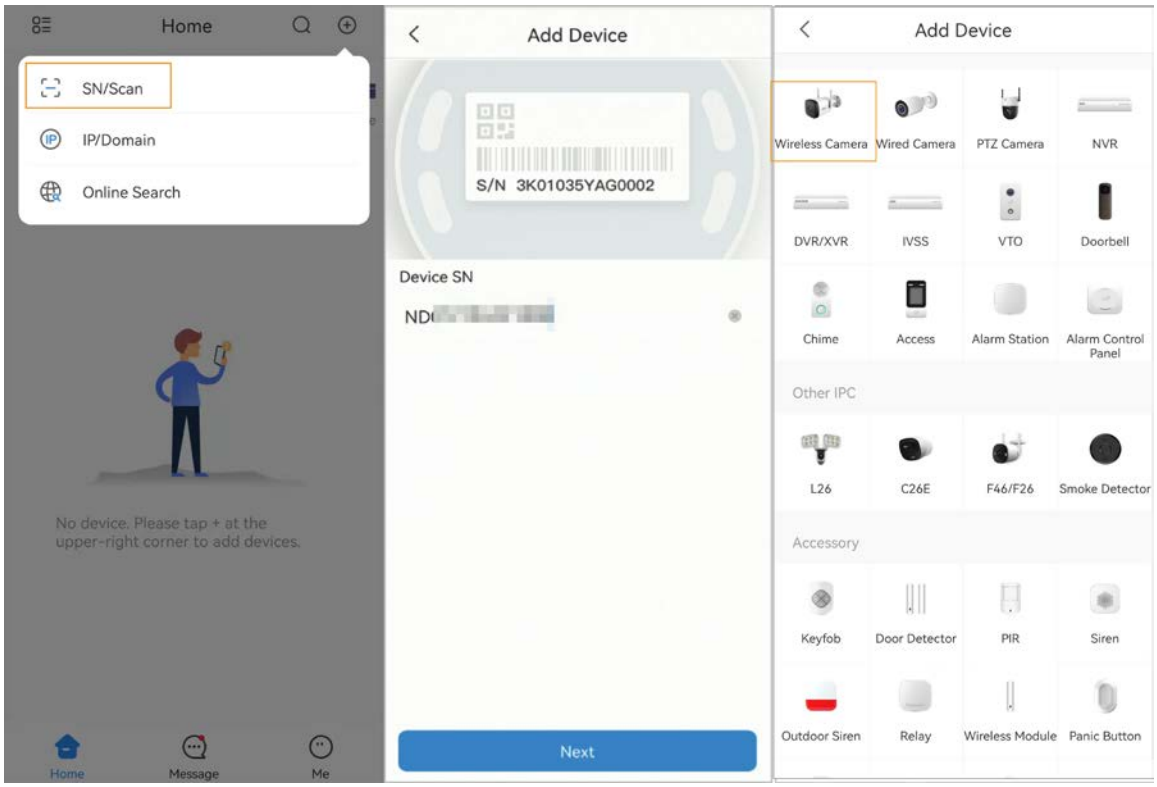

Step 2 Configure the device hotspot.

If you connect the device with an Ethernet cable, please jump to Step4 directly.

1) Make sure that the device is connected to power and enable device hotspot, and then tap **Next**.
2) Go to Wi-Fi settings on your mobile phone, connect hotspot named DAP-xxxxxxxx.
3) Enter the username and password for the device, and then tap **Next**.

Figure 3-2 Configure the device hotspot

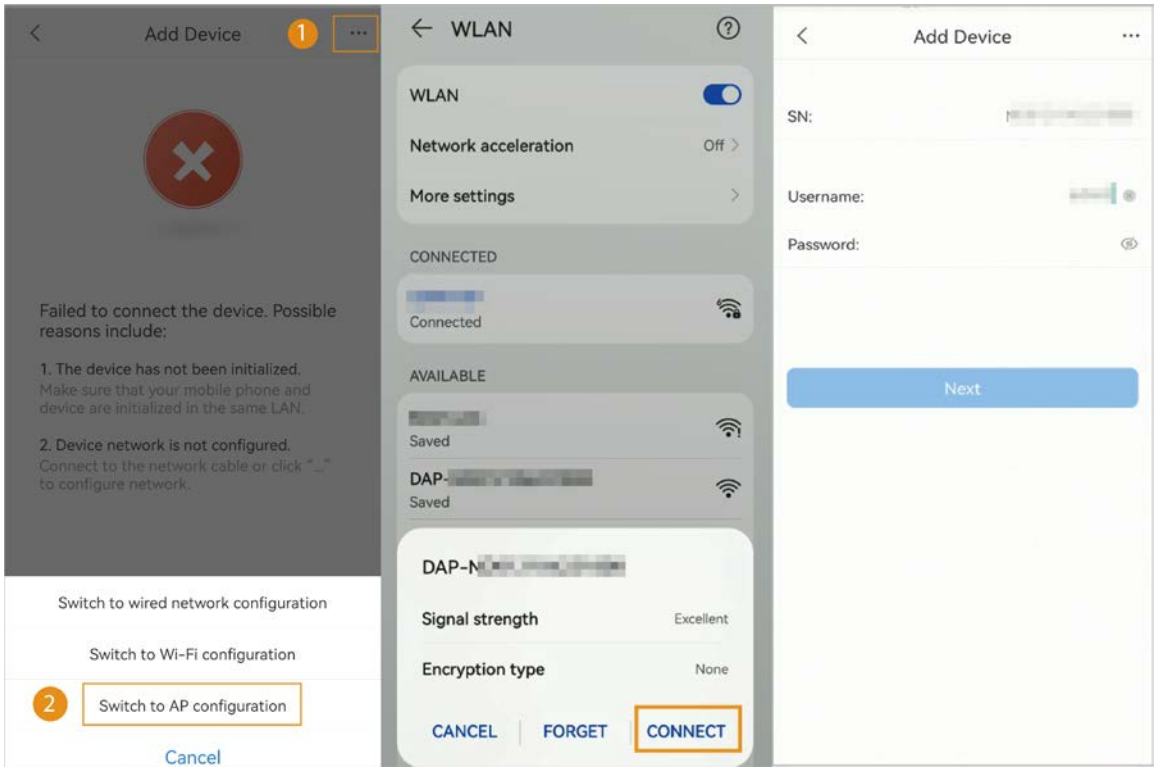

Step 3 Configure the Wi-Fi.

Select your Wi-Fi network from the SSID list, and then enter the password.

Step 4 Configure the device information.

1) Create the device name and password.
2) Set the time zone, and then click **Done**.

Figure 3-3 Configure the device information

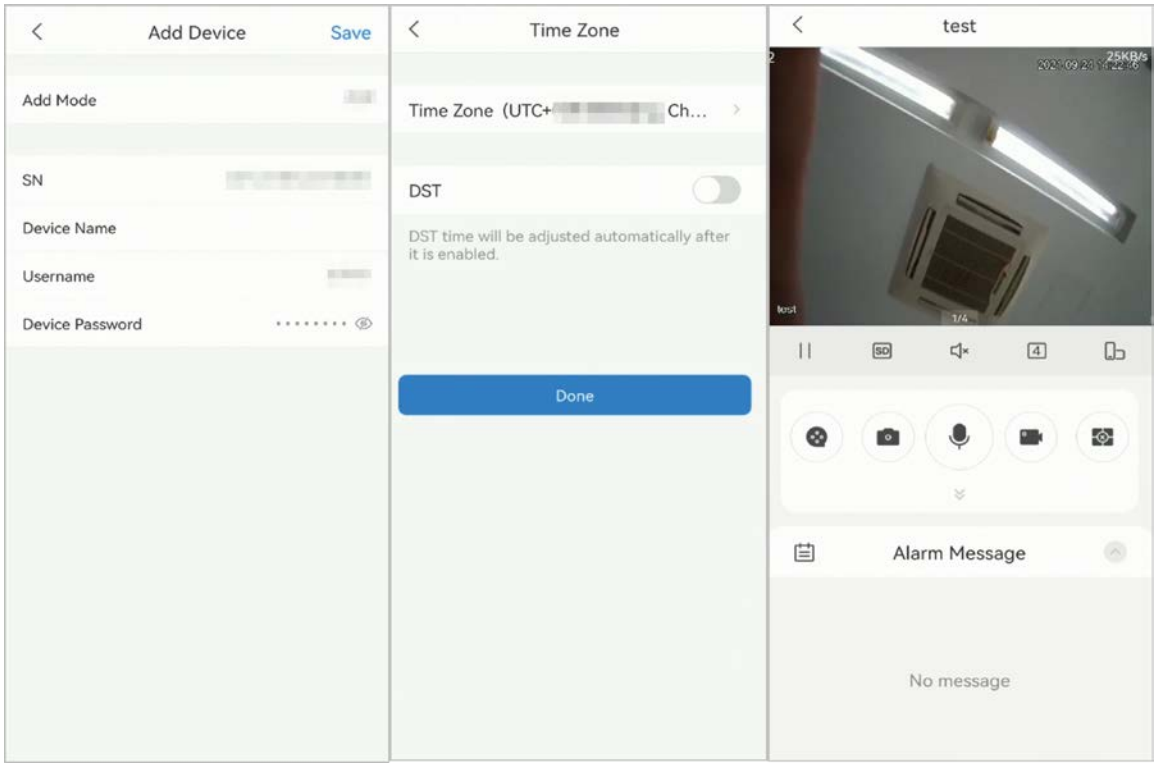

4 Installation

4.1 Packing List

- Tools required for installation, such as the electric drill, are not included in the package.
- The operation manual and information on the tools are on the disk or the QR code.

Figure 4-1 Packing list

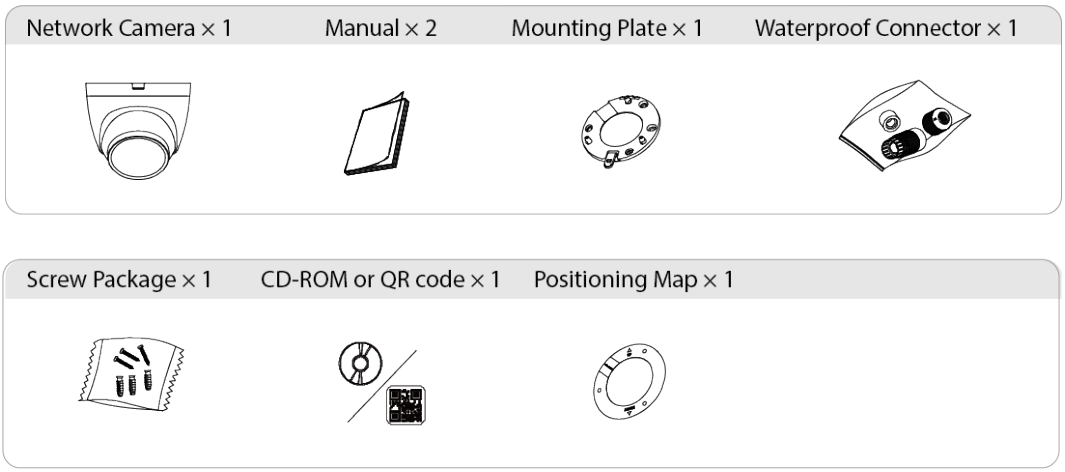

4.2 Dimensions

Figure 4-2 Dimensions (mm [inch])

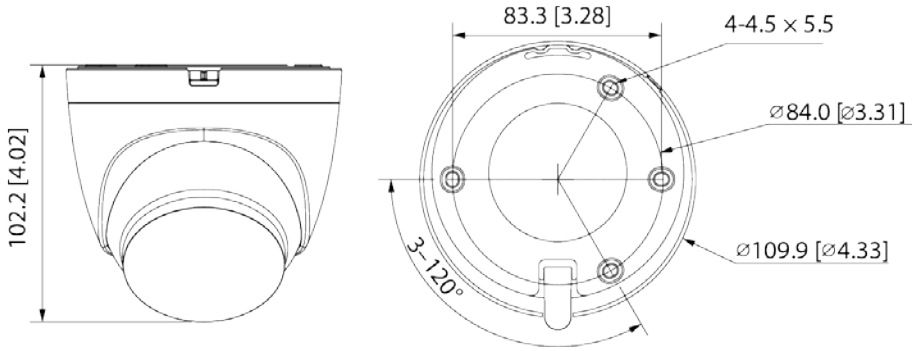

4.3 Installing the Camera

4.3.1 Installation Methods

Figure 4-3 Installation methods

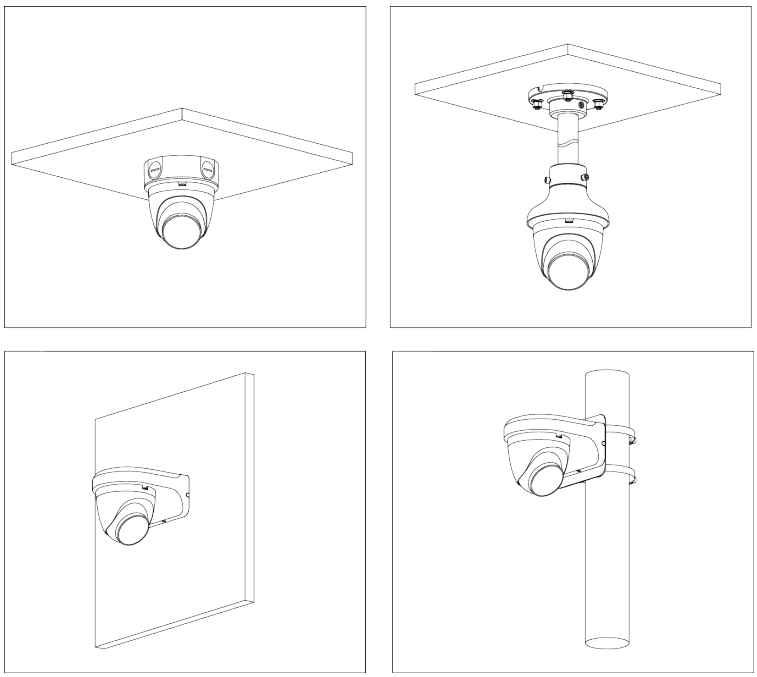

4.3.2 Installing the SD Card

- SD card slot is available on select models.
- Disconnect the power before installing or removing the SD card.

Press the reset button for 10 seconds to reset the device.

Figure 4-4 Install the SD card

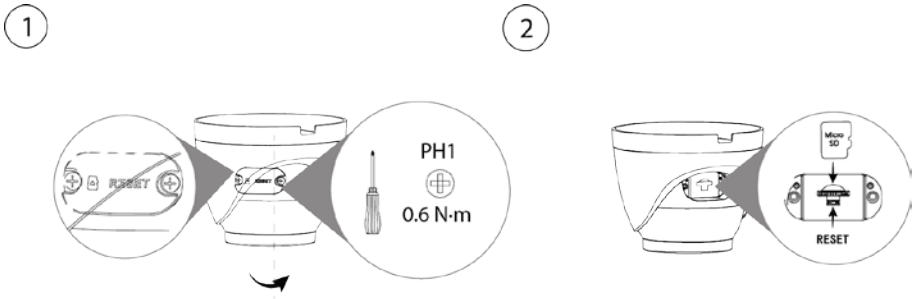

4.3.3 Attaching the Camera

Make sure that the mounting surface is strong enough to hold at least three times the weight of the camera and bracket.

Figure 4-5 Cable going through the side cable tray

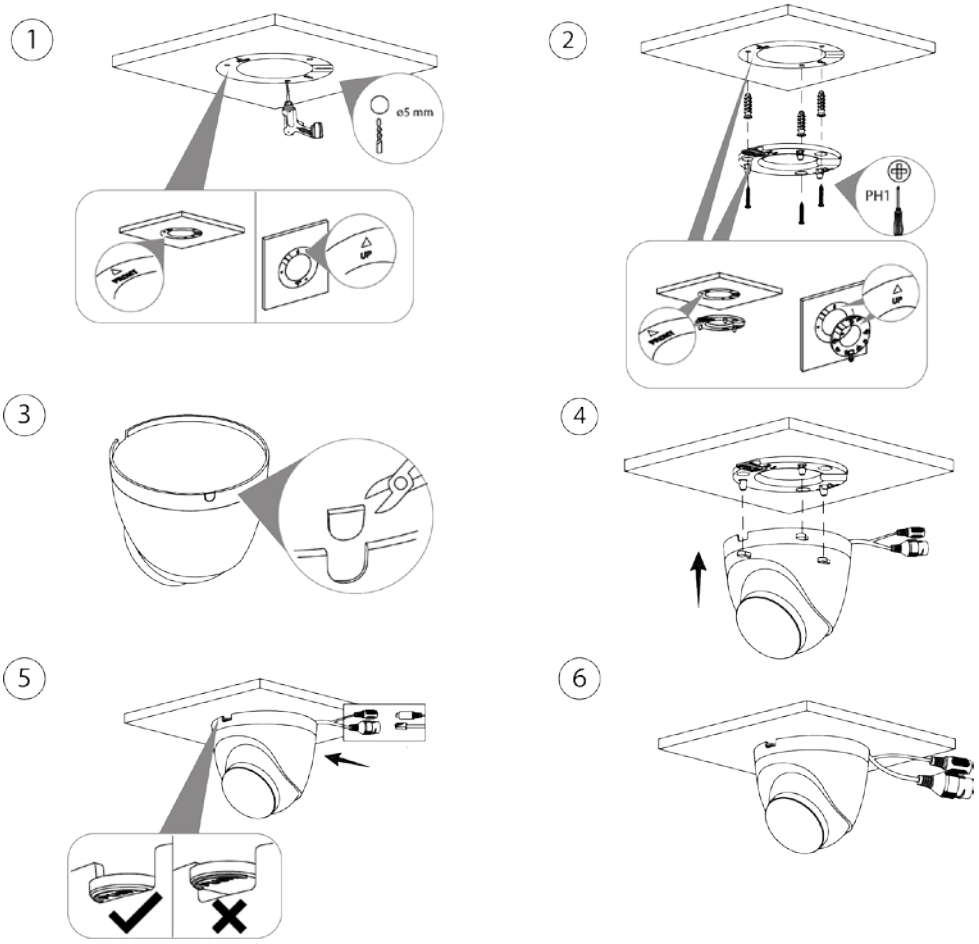

Figure 4-6 Cable going through the mounting surface

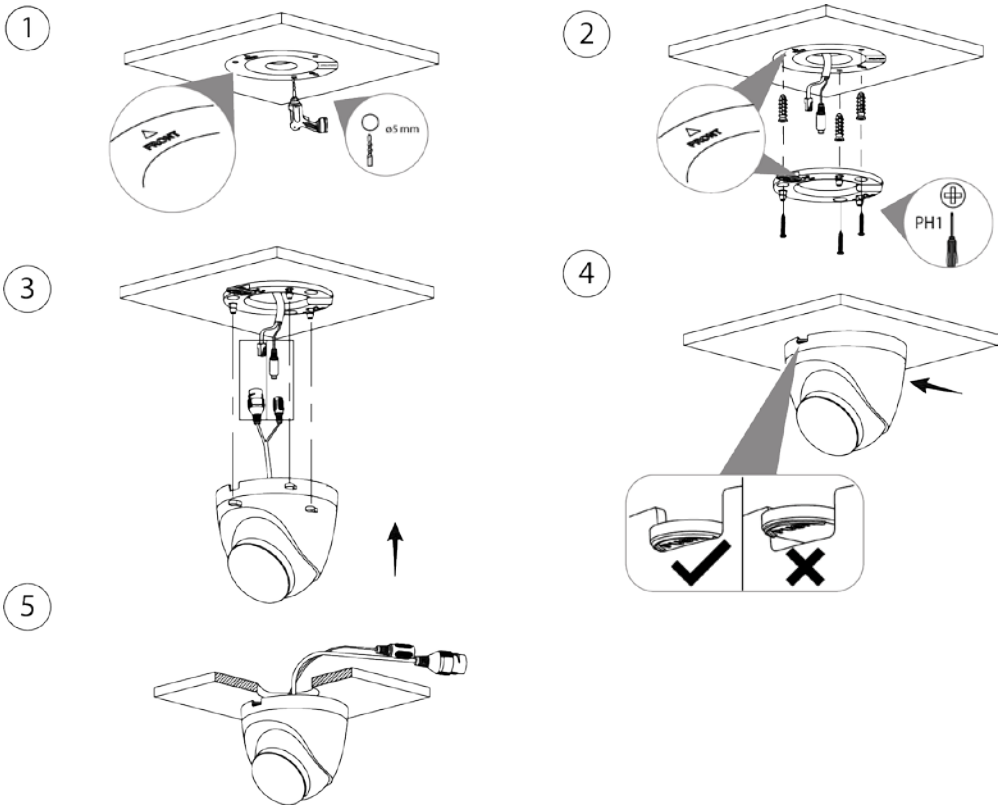

4.3.4 (Optional) Installing the Waterproof Connector

This part is needed only when a waterproof connector comes with the camera and the camera is used outdoors.

Figure 4-7 Install the waterproof connector

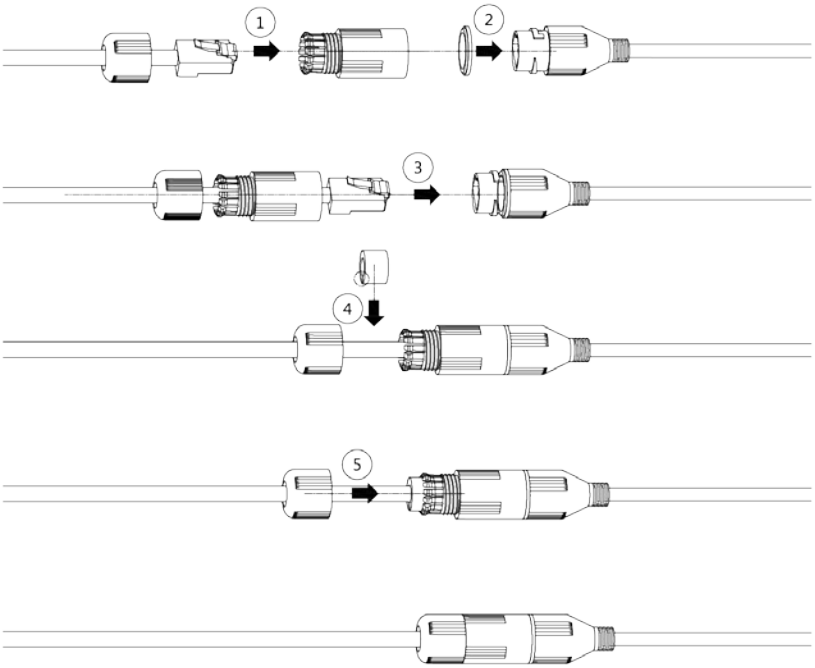

4.3.5 Adjusting the Lens Angle

Figure 4-8 Adjust the lens angle

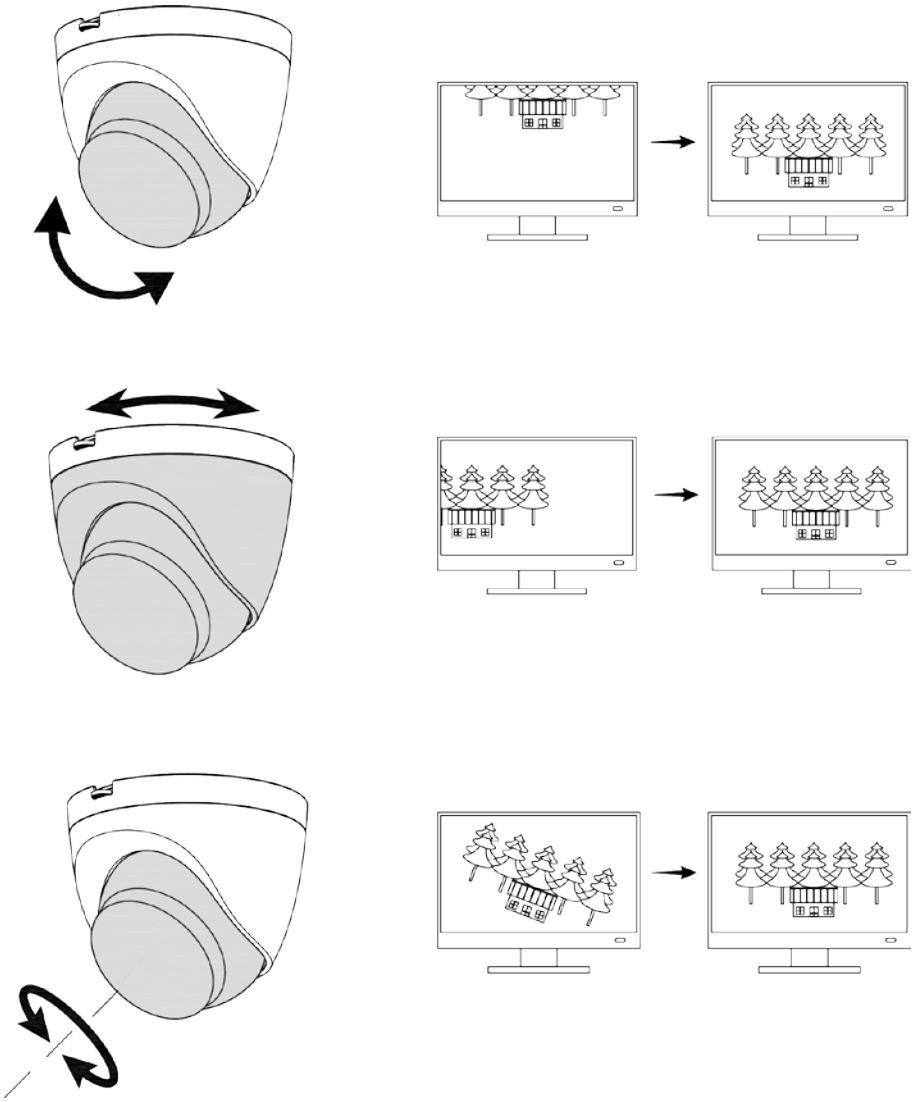

ENABLING A SAFER SOCIETY AND SMARTER LIVING

ZHEJIANG DAHUA VISION TECHNOLOGY CO., LTD.
Address: No.1199 Bin'an Road, Binjiang District, Hangzhou, P. R. China | Website: www.dahuasecurity.com | Postcode: 310053
Email: overseas@dahuatech.com | Fax: +86-571-87688815 | Tel: +86-571-87688883

Legal and Regulatory Information

Legal Considerations

Video surveillance can be regulated by laws that vary from country to country. Check the laws in your local region before using this product for surveillance purposes.

Disclaimer

Every care has been taken in the preparation of this document. Please inform your nearest Dahua office of any inaccuracies or omissions. Dahua Technology shall not be held responsible for any technical or typographical errors and reserves the right to make changes to the product and manuals without prior notice. Dahua Technology makes no warranty of any kind with regard to the material contained within this document, including, but not limited to, the implied warranties of merchantability and fitness for a particular purpose. Dahua Technology shall not be liable or responsible for incidental or consequential damages in connection with the furnishing, performance or use of this material. This product is only to be used for its intended purpose.

Intellectual Property Rights

Dahua Technology retains all intellectual property rights relating to technology embodied in the product described in this document.

Equipment Modifications

This equipment must be installed and used in strict accordance with the instructions given in the user documentation. This equipment contains no user-serviceable components. Unauthorized equipment changes or modifications will invalidate all applicable regulatory certifications and approvals.

Trademark Acknowledgments

dahua, dahua, HDCVI, imou are registered trademarks or trademark applications of Dahua Technology in various jurisdictions. All other company names and products are trademarks or registered trademarks of their respective companies.

Regulatory Information

European Directives Compliance

CE This product complies with the applicable CE marking directives and standards:

- Low Voltage (LVD) Directive 2014/35/EU.
- Electromagnetic Compatibility (EMC) Directive 2014/30/EU.
- Restrictions of Hazardous Substances (RoHS) Directive 2011/65/EU and its amending Directive (EU) 2015/863.

A copy of the original declaration of conformity may be obtained from Dahua Technology.

The most up to date copy of the signed EU Declaration of Conformity (DoC) can be downloaded from: www.dahuasecurity.com/support/notice/

CE-Electromagnetic Compatibility (EMC)

This digital equipment is compliant with Class B according to EN 55032.

CE-Safety

This product complies with IEC/EN/UL 60950-1 or IEC/EN/UL 62368-1, Safety of Information Technology Equipment.

Declaration of Conformity CE

(Only for the product has RF function)

Hereby, Dahua Technology declares that the radio equipment is compliant with Radio Equipment Directive (RED) 2014/53/EU. The full text of the EU declaration of conformity is available at the following internet address: www.dahuasecurity.com/support/notice/

USA Regulatory Compliance

FCC

This device complies with Part 15 of the FCC Rules. Operation is subject to the following two conditions:

(1) This device may not cause harmful interference.

(2) This device must accept any interference received, including interference that may cause undesired operation.

Attention that changes or modification not expressly approved by the party responsible for compliance could void the user's authority to operate the equipment.

Note: This product has been tested and found to comply with the limits for a Class B digital device, pursuant to Part 15 of the FCC Rules. These limits are designed to provide reasonable protection against harmful interference in a residential installation. This product generates, uses, and can radiate radio frequency energy and, if not installed and used in accordance with the instructions, may cause harmful interference to radio communications. However, there is no guarantee that interference will not occur in a

particular installation. If this product does cause harmful interference to radio or television reception, which can be determined by turning the equipment off and on, the user is encouraged to try to correct the interference by one or more of the following measures:

- Reorient or relocate the receiving antenna.
- Increase the separation between the equipment and receiver.
- Connect the equipment into an outlet on a circuit different from that to which the receiver is connected.
- Consult the dealer or an experienced radio/TV technician for help.

FCC SDOC Statement can be downloaded from: https://us.dahuasecurity.com/support/notices/

RF exposure warning

(Only for the product has RF communication function)

This equipment must be installed and operated in accordance with provided instructions and the antenna(s) used for this transmitter must be installed to provide a separation distance of at least 20 cm from all persons and must not be co-located or operating in conjunction with any other antenna or transmitter. End-users and installers must be provided with antenna installation instructions and transmitter operating conditions for satisfying RF exposure compliance.

This equipment should be installed and operated with a minimum distance 20cm between the radiator and your body.

Canada Regulatory Compliance

ICES-003

This Class B digital apparatus complies with Canadian ICES-003.

Cet appareil numérique de la classe B est conforme à la norme NMB-003 du Canada.

This device complies with Industry Canada licence-exempt RSS standard(s). Operation is subject to the following two conditions:

(1) This device may not cause interference, and

(2) This device must accept any interference, including interference that may cause undesired operation of the device.

Le présent appareil est conforme aux CNR d'Industrie Canada applicables aux appareils radioexempts de licence. L'exploitation est autorisée aux deux conditions suivantes:

(1) l'appareil ne doit pas produire de brouillage, et

(2) l'utilisateur de l'appareil doit accepter tout brouillage radioélectrique subi, même si le brouillage est susceptible d'en compromettre le fonctionnement.

RF exposure warning

(Only for the product has RF communication function)

This equipment should be installed and operated with a minimum distance 20cm between the radiator and your body.

Cet équipement doit être installé et utilisé à une distance minimale de 20 cm entre le radiateur et votre corps.

Under Industry Canada regulations, this radio transmitter may only operate using an antenna of a type and maximum (or lesser) gain approved for the transmitter by Industry Canada. To reduce potential radio interference to other users, the antenna type and its gain should be so chosen that the equivalent isotropically radiated power (e.i.r.p.) is not more than that necessary for successful communication.

Conformément à la réglementation d'Industrie Canada, le présent émetteur radio peut fonctionner avec une antenne d'un type et d'un gain maximal (ou inférieur) approuvé pour l'émetteur par Industrie Canada. Dans le but de réduire les risques de brouillage radioélectrique à l'intention des autres utilisateurs, il faut choisir le type d'antenne et son gain de sorte que la puissance isotrope rayonnée équivalente (p.i.r.e.) ne dépasse pas l'intensité nécessaire à l'établissement d'une communication satisfaisante.

Japan Regulatory Compliance

VCCI

These products comply with the requirements of VCCI Class B Information Technology Equipment.

Batteries

Correct disposal of batteries in this product

This marking on the battery indicates that the batteries in this product should not be disposed of with other household waste at the end of their working life. Where marked, the chemical symbols Hg, Cd or Pb indicate that the battery contains mercury, cadmium or lead above the reference levels in Directive 2006/66/EC and its amending Directive 2013/56/EU. If batteries are not properly disposed of, these substances can cause harm to human health or the environment.

⚠CAUTION

Risk of explosion if battery is replaced by an incorrect type. Dispose of used batteries according to the instructions.

Safety

The product complies with IEC/EN/UL 60950-1, Information Technology Equipment – Safety – Part 1: General Requirements; or complies with IEC/EN/UL 62368-1, Audio/video, information and communication technology equipment – Part 1: Safety requirements.

If the power supply to the product is from external power adaptor without connecting to AC Mains, and the product is not shipped with power adaptor, customers are required to use the external power adaptor that must fulfill the requirements for Safety Extra Low Voltage (SELV) and Limited Power Source (LPS).

Waste Electrical and Electronic Equipment (WEEE) statements

Disposal and Recycling

When this product has reached the end of its useful life, dispose of it according to local laws and regulations. For information about your nearest designated collection point, contact your local authority responsible for waste disposal. In accordance with local legislation, penalties may be applicable for incorrect disposal of this waste.

This symbol means that the product shall not be disposed of together with household or commercial waste. Directive 2012/19/EU on waste electrical and electronic equipment (WEEE) is applicable in the European Union member states. To prevent potential harm to human health and the environment, the product must be disposed of in an approved and environmentally safe recycling process. For information about your nearest designated collection point, contact your local authority responsible for waste disposal. Businesses should contact the product supplier for information about how to dispose of this product correctly.

Privacy Protection Notice

As the device user or data controller, you might collect personal data of others such as face, fingerprints, car plate number, Email address, phone number, GPS and so on. You need to be in compliance with the local privacy protection laws and regulations to protect the legitimate rights and interests of other people by implementing measures, including but not limited to: providing clear and visible identification to inform data subject the existence of surveillance area and providing related contact.

About the Manual

- The manual is for reference only. If there is inconsistency between the manual and the actual product, the actual product shall prevail.
- We are not liable for any loss caused by the operations that do not comply with the manual.
- The manual would be updated according to the latest laws and regulations of related jurisdictions. For detailed information, refer to the paper manual, CD-ROM, QR code or our official website. If there is inconsistency between paper manual and the electronic version, the electronic version shall prevail.
- All the designs and software are subject to change without prior written notice. The product updates might cause some differences between the actual product and the manual. Please contact the customer service for the latest program and supplementary documentation.
- There still might be deviation in technical data, functions and operations description, or errors in print. If there is any doubt or dispute,

we reserve the right of final explanation.
- Upgrade the reader software or try other mainstream reader software if the manual (in PDF format) cannot be opened.
- All trademarks, registered trademarks and the company names in the manual are the properties of their respective owners.
- Please visit our website, contact the supplier or customer service if there is any problem occurring when using the device.
- If there is any uncertainty or controversy, we reserve the right of final explanation.

Support

Should you require any technical assistance, please contact your Dahua distributor. If your questions cannot be answered immediately, your distributor will forward your queries through the appropriate channels to ensure a rapid response. If you are connected to the Internet, you can:

- Download user documentation and software updates.
- Search by product, category, or phrase.
- Report problems to Dahua support staff by logging in to your private support area.
- Chat with Dahua support staff.
- Visit Dahua Support at www.dahuasecurity.com/support.

Contact Information

ZHEJIANG DAHUA VISION TECHNOLOGY CO., LTD.

Address: No.1199, Bin'an Road, Binjiang District, Hangzhou, P.R. China

Postcode: 310053

Tel: +86-571-87688883

Fax: +86-571-87688815

Email: overseas@dahuatech.com

Website: www.dahuasecurity.com

English

Important Safeguards and Warnings

This Chapter describes the contents covering proper handling of the device, hazard prevention, and prevention of property damage. Read these contents carefully before using the device, comply with them when using, and keep it well for future reference.

Safety Instructions

The following categorized signal words with defined meaning might appear in the manual.

Signal Words	Meaning
DANGER	Indicates a high potential hazard which, if not avoided, will result in death or serious injury.
WARNING	Indicates a medium or low potential hazard which, if not avoided, could result in slight or moderate injury.
CAUTION	Indicates a potential risk which, if not avoided, could result in property damage, data loss, lower performance, or unpredictable result.
TIPS	Provides methods to help you solve a problem or save you time.
NOTE	Provides additional information as the emphasis and supplement to the text.

Safety Requirement

- Abide by local electrical safety standards to ensure that the voltage is stable and complies with the power supply requirement of the device.
- Transport, use, and store the device under the allowed humidity and temperature conditions. Refer to the corresponding technical specifications of device for specific working temperature and humidity.
- Do not place the device in a location exposed to dampness, dust, extreme hot or cold, strong electronic radiation, or unstable lighting condtions.
- Do not install the device in a place near the heat source, such as radiator, heater, furnace, or other heat generating device to avoid fire.
- Prevent liquid from flowing into the device to avoid damge to internal components.
- Install the device horizontally or install on the stable place to prevent it from falling.
- Install the device in a well-ventilated place, and do not block the ventilation of the device.
- Do not disassemble the device arbitrarily.
- Avoid heavy stress, violent vibration, and soaking during during transportation, storage, and installation. Complete package is necessary during the transportation.
- Use the factory package or the equivalent for transportation.

Battery

Low battery power affects the operation of the RTC, causing it to reset at every power-up. When the battery needs replacing, a log message will appear in the product's server report. For more information about the server report, see the product´s setup pages or contact Dahua support.

WARNING

- Risk of explosion if the battery is incorrectly replaced.
- Replace only with an identical battery or a battery which is recommended by Dahua.
- Dispose of used batteries according to local regulations or the battery

manufacturer's instructions.

Français

Précautions et avertissements importants

Le contenu de ce chapitre aborde la bonne manipulation de l'appareil, la prévention des risques et la prévention des dommages matériels. Lisez ce contenu soigneusement avant d'utiliser l'appareil, respectez-le lorsque vous l'utilisez, et conservez-le pour vous y référer ultérieurement.

Précautions d'emploi

Les mentions d'avertissement catégorisées suivantes ayant un sens défini sont susceptibles d'apparaître dans le manuel.

Mentions d'avertissement	Signification
DANGER	Indique un danger à risque élevé qui entraînera la mort ou des blessures graves si les instructions données ne sont pas respectées.
AVERTISSEMENT	Indique une situation moyennement ou faiblement dangereuse qui entraînera des blessures faibles ou modérées si les instructions données ne sont pas respectées.
AVERTISSEMENT	Indique une situation potentiellement dangereuse qui pourra entraîner des dommages de la propriété, des pertes de données, une performance moindre ou des résultats imprévisibles, si les instructions données ne sont pas respectées.
ASTUCES	Fournit des instructions qui vous permettront de résoudre un problème ou de vous faire gagner du temps.
REMARQUE	Fournit des informations supplémentaires pour mettre en évidence et compléter le texte.

Exigences de sécurité

- Respectez les normes de sécurité électrique locales pour vous assurer que la tension est stable et conforme aux exigences d'alimentation de l'appareil.
- Transportez, utilisez et stockez l'appareil dans les conditions d'humidité et de température autorisées. Consultez les spécifications techniques correspondantes de l'appareil pour connaître la température et l'humidité de fonctionnement spécifiques.
- Ne placez pas l'appareil dans un lieu exposé à l'humidité, à la poussière, à une chaleur ou un froid extrême, à de forts rayonnements électroniques, ou à des conditions d'éclairage instables.