DYNAMIC FREQUENCY SELECTION

DFS Test Report

APPLICANT	:	Ubiquiti Networks, Inc.
EQUIPMENT	:	NanoBeam AC
BRAND NAME	:	UBIQUITI
MODEL NAME	:	NBE-5AC-Gen2
FCC ID	:	SWX-NBE5ACG2W
STANDARD	:	FCC Part 15 Subpart E
CLASSIFICATION	:	(NII) Unlicensed National Information Infrastructure

The product was received on Jun. 24, 2017 and completely tested on Sep. 08, 2017. We, SPORTON INTERNATIONAL INC., would like to declare that the tested sample has been evaluated in accordance with the procedures and shown to be compliant with the applicable technical standards.

The test results in this report apply exclusively to the tested model / sample. Without written approval of SPORTON INTERNATIONAL INC., the test report shall not be reproduced except in full.

Reviewed by: Joseph Lin / Supervisor

Approved by: Jones Tsai / Manager

Testing Laboratory
1190

SPORTON INTERNATIONAL INC.
No. 52, Hwa Ya 1st Rd., Hwa Ya Technology Park, Kwei-Shan Hsiang, Tao Yuan Hsien, Taiwan, R.O.C.

TABLE OF CONTENTS

REVISION HISTORY **3**

SUMMARY OF DYNAMIC FREQUENCY SELECTION TEST **4**

1 GENERAL DESCRIPTION **5**

1.1 Applicant 5
1.2 Manufacturer 5
1.3 Feature of Equipment Under Test 5
1.4 Modification of EUT 5
1.5 Testing Site 6
1.6 Applied Standards 6
1.7 Support Unit used in test configuration and system 6

2 REQUIREMENTS AND PARAMETERS FOR DFS TEST **7**

2.1 Applicability of DFS Requirements 7
2.2 DFS Detection Thresholds 9
2.3 DFS Response requirement values 10
2.4 Short Pulse Radar Test Waveforms 11
2.5 Long Pulse Radar Test Waveform 13
2.6 Frequency Hopping Radar Test Waveform 15

3 CALIBRATION SETUP AND DFS TEST RESULTS **16**

3.1 Calibration of Radar Waveform 16
3.2 U-NII Detection Bandwidth (7.8.1) 18
3.3 Channel Availability Check (7.8.2) 29
3.4 In-Service Monitoring: Channel Move Time, Channel Closing Transmission Time and Non-Occupancy Period (7.8.3) 34
3.5 Statistical Performance Check (7.8.4) 41

4 LIST OF MEASURING EQUIPMENT **56**

APPENDIX A. RADAR PARAMETER REPORT

APPENDIX B. SETUP PHOTOGRAPHS

REVISION HISTORY

REPORT NO.	VERSION	DESCRIPTION	ISSUED DATE
FZ561115-04A	Rev. 01	Initial issue of report	Oct. 02, 2017

SUMMARY OF DYNAMIC FREQUENCY SELECTION TEST

UNII	Description	Limit	Result
U-NII Band 2-C 5470-5725MHz	Channel Availability Check Time	> 60sec	Pass
	U-NII Detection Bandwidth	> 100% of the U-NII 99% transmission power bandwidth	Pass
	Statistical Performance Check	Type 1,2,3,4 >= 60% Type 1~4 and 5 >= 80% Type 6 >= 70%	Pass
	Channel Move Time	< 10 sec	Pass
	Channel Closing Transmission Time	< 200 ms + aggregate of 60 ms over remaining 10 s period	Pass
	Non-Occupancy Period Test	> 30 minutes	Pass

1 General Description

1.1 Applicant

Ubiquiti Networks, Inc.
685 Third Avenue, 27th Floor New York, New York 10017 USA

1.2 Manufacturer

Ubiquiti Networks, Inc.
685 Third Avenue, 27th Floor New York, New York 10017 USA

1.3 Feature of Equipment Under Test

Wi-Fi 2.4GHz 802.11b/g/n and Wi-Fi 5GHz 802.11a/n/ac.

Product Specification subjective to this standard	
Antenna Type	WLAN: Internal Antenna

1.4 Modification of EUT

No modifications are made to the EUT during all test items.

1.5 Testing Site

Test Site	SPORTON INTERNATIONAL INC.
Test Site Location	No. 52, Hwa Ya 1st Rd., Hwa Ya Technology Park, Kwei-Shan Hsiang, Tao Yuan Hsien, Taiwan, R.O.C. TEL: +886-3-3273456 / FAX: +886-3-3284978
Test Site No.	**Sporton Site No.**
	DFS02-HY

1.6 Applied Standards

According to the specifications of the manufacturer, the EUT must comply with the requirements of the following standards:

- FCC Part 15 Subpart E
- FCC KDB 905462 D02 UNII DFS Compliance Procedures New Rules v02
- FCC KDB 905462 D04 Operational Modes for DFS Testing New Rules v01

Remark: All test items were verified and recorded according to the standards and without any deviation during the test.

1.7 Support Unit used in test configuration and system

Item	Equipment	Trade Name	Model Name	FCC ID
1.	Notebook	Lenovo	Edge E335	PPD-AR5B95

2 Requirements and Parameters for DFS Test

2.1 Applicability of DFS Requirements

EUT is considered as a master device.

Table 1: Applicability of DFS Requirements Prior to Use of a Channel

Requirement	Operational Mode		
	Master	Client Without Radar Detection	Client With Radar Detection
Non-Occupancy Period	Yes	Not required	Yes
DFS Detection Threshold	Yes	Not required	Yes
Channel Availability Check Time	Yes	Not required	Not required
U-NII Detection Bandwidth	Yes	Not required	Yes

Table 2: Applicability of DFS requirements during normal operation

Requirement	Operational Mode		
	Master	Client Without Radar Detection	Client With Radar Detection
DFS Detection Threshold	Yes	Not required	Yes
Channel Closing Transmission Time	Yes	Yes	Yes
Channel Move Time	Yes	Yes	Yes
U-NII Detection Bandwidth	Yes	Not required	Yes
Client Beacon Test	N/A	Yes	Yes

Additional requirements for devices with multiple bandwidth modes	Operational Mode	
	Master or Client With Radar Detection	**Client Without Radar Detection**
U-NII Detection Bandwidth and Statistical Performance Check	All BW modes must be tested	Not required
Channel Move Time and Channel Closing Transmission Time	Test using widest BW mode available	Test using the widest BW mode available for the link
All other tests	Any single BW mode	Not required

Note

Frequencies selected for statistical performance check (Section 7.8.4) should include several frequencies within the radar detection bandwidth and frequencies near the edge of the radar detection bandwidth. For 802.11 devices it is suggested to select frequencies in each of the bonded 20 MHz channels and the channel center frequency.

2.2 DFS Detection Thresholds

Table 3 below provides the DFS Detection Thresholds for Master Devices as well as Client Devices incorporating In-Service Monitoring.

Table 3: DFS Detection Thresholds for Master Devices

Maximum Transmit Power	Value (see notes 1, 2, and 3)
EIRP ≥ 200 milliwatt	-64 dBm
EIRP < 200 milliwatt and power spectral density < 10 dBm/MHz	-62 dBm
EIRP < 200 milliwatt that do not meet the power spectral density requirement	-64 dBm
Note 1: This is the level at the input of the receiver assuming a 0 dBi receive antenna. **Note 2:** Throughout these test procedures an additional 1 dB has been added to the amplitude of the test transmission waveforms to account for variations in measurement equipment. This will ensure that the test signal is at or above the detection threshold level to trigger a DFS response. **Note 3:** EIRP is based on the highest antenna gain. For MIMO devices refer to KDB Publication 662911 D01.	

The radar *Detection Threshold*, lowest antenna gain is the parameter of Interference *radar DFS detection threshold*, The Interference *Detection Threshold* is the *(-64dBm)* + *(17)* [dBi]+ 1 dB= -46 dBm.

2.3 DFS Response requirement values

Table 4 provides the response requirements for Master and Client Devices incorporating DFS.

Table 4: DFS Response Requirement Values

Parameter	Value
Non-occupancy period	Minimum 30 minutes
Channel Availability Check Time	60 seconds
Channel Move Time	10 seconds See Note 1.
Channel Closing Transmission Time	200 milliseconds + an aggregate of 60 milliseconds over remaining 10 second period. See Notes 1 and 2.
U-NII Detection Bandwidth	Minimum 100% of the 99% power bandwidth See Note 3.

Note 1: *Channel Move Time* and the *Channel Closing Transmission Time* should be performed with Radar Type 0. The measurement timing begins at the end of the Radar Type 0 burst.

Note 2: The *Channel Closing Transmission Time* is comprised of 200 milliseconds starting at the beginning of the *Channel Move Time* plus any additional intermittent control signals required to facilitate *Channel* changes (an aggregate of 60 milliseconds) during the remainder of the 10 second period. The aggregate duration of control signals will not count quiet periods in between transmissions.

Note 3: During the *U-NII Detection Bandwidth* detection test, radar type 0 is used and for each frequency step the minimum percentage of detection is 90%. Measurements are performed with no data traffic.

2.4 Short Pulse Radar Test Waveforms

Radar Type 0 was used in the evaluation of the Client device for the purpose of measuring the Channel Move Time and the Channel Closing Transmission Time.

Radar Type	Pulse Width (μsec)	PRI (μsec)	Number of Pulses	Minimum Percentage of Successful Detection	Minimum Trials
0	1	1428	18	See Note 1.	See Note 1.
1	1	Test A Test B	$\text{Roundup}\left\{\left(\frac{1}{360}\right)\cdot\left(\frac{19\cdot 10^6}{\text{PRI}_{\mu\text{sec}}}\right)\right\}$	60%	30
2	1-5	150-230	23-29	60%	30
3	6-10	200-500	16-18	60%	30
4	11-20	200-500	12-16	60%	30
Aggregate (Radar Types 1-4)				80%	120

Note 1: Short Pulse Radar Type 0 should be used for the detection bandwidth test, channel move time, and channel closing time tests.

Test A: 15 unique PRI values randomly selected from the list of 23 PRI values in Table 5a
Test B: 15 unique PRI values randomly selected within the range of 518-3066 μsec, with a minimum increment of 1 μsec, excluding PRI values selected in Test A

A minimum of 30 unique waveforms are required for each of the Short Pulse Radar Types 2 through 4. If more than 30 waveforms are used for Short Pulse Radar Types 2 through 4, then each additional waveform must also be unique and not repeated from the previous waveforms.

If more than 30 waveforms are used for Short Pulse Radar Type 1, then each additional waveform is generated with Test B and must also be unique and not repeated from the previous waveforms in Tests A or B.

The aggregate is the average of the percentage of successful detections of short pulse radar types 1-4.

Table 5a - Pulse Repetition Intervals Values for Test A

Pulse Repetition Frequency Number (1 to 23)	Pulse Repetition Frequency (Pulses Per Second)	Pulse Repetition Interval (Microseconds)
1	1930.5	518
2	1858.7	538
3	1792.1	558
4	1730.1	578
5	1672.2	598
6	1618.1	618
7	1567.4	638
8	1519.8	658
9	1474.9	678
10	1432.7	698
11	1392.8	718
12	1355.0	738
13	1319.3	758
14	1285.3	778
15	1253.1	798
16	1222.5	818
17	1193.3	838
18	1165.5	858
19	1139.0	878
20	1113.6	898
21	1089.3	918
22	1066.1	938
23	326.2	3066

2.5 Long Pulse Radar Test Waveform

Radar Type	Pulse Width (μsec)	Chirp Width (MHz)	PRI (μsec)	Number of Pulses per *Burst*	Number of Bursts	Minimum Percentage of Successful Detection	Minimum Trials
5	50-100	5-20	1000-2000	1－3	8-20	80%	30

The parameters for this waveform are randomly chosen. Thirty unique waveforms are required for the Long Pulse radar test signal. If more than 30 waveforms are used for the Long Pulse radar test signal, then each additional waveform must also be unique and not repeated from the previous waveforms. Each waveform is defined as follows:

Note: The center frequency for each of the 30 trials of the Bin 5 radar shall be randomly selected within 80% of the Occupied Bandwidth.

(1) The transmission period for the Long Pulse Radar test signal is 12 seconds.

(2) There are a total of 8 to 20 Bursts in the 12 second period, with the number of Bursts being randomly chosen. This number is Burst_Count.

(3) Each Burst consists of 1 to 3 pulses, with the number of pulses being randomly chosen. Each Burst within the 12 second sequence may have a different number of pulses.

(4) The pulse width is between 50 and 100 microseconds, with the pulse width being randomly chosen. Each pulse within a Burst will have the same pulse width. Pulses in different Bursts may have different pulse widths.

(5) Each pulse has a linear frequency modulated chirp between 5 and 20 MHz, with the chirp width being randomly chosen. Each pulse within a **transmission period** will have the same chirp width. The chirp is centered on the pulse. For example, with a radar frequency of 5300 MHz and a 20 MHz chirped signal, the chirp starts at 5290 MHz and ends at 5310 MHz

(6) If more than one pulse is present in a Burst, the time between the pulses will be between 1000 and 2000 microseconds, with the time being randomly chosen. If three pulses are present in a Burst, the time between the first and second pulses is chosen independently of the time between the second and third pulses.

(7) The 12 second transmission period is divided into even intervals. The number of intervals is equal to Burst_Count. Each interval is of length (12,000,000 / Burst_Count) microseconds. Each interval contains one Burst. The start time for the Burst, relative to the beginning of the interval, is between 1 and [(12,000,000 / Burst_Count) – (Total Burst Length) + (One Random PRI Interval)] microseconds, with the start time being randomly chosen. The step interval for the start time is 1 microsecond. The start time for each Burst is chosen independently.

A representative example of a Long Pulse radar test waveform:

(1) The total test signal length is 12 seconds.

(2) 8 Bursts are randomly generated for the Burst_Count.

(3) Burst 1 has 2 randomly generated pulses.

(4) The pulse width (for both pulses) is randomly selected to be 75 microseconds.

(5) The PRI is randomly selected to be at 1213 microseconds.

(6) Bursts 2 through 8 are generated using steps 3 – 5.

(7) Each Burst is contained in even intervals of 1,500,000 microseconds. The starting location for Pulse 1, Burst 1 is randomly generated (1 to 1,500,000 minus the total Burst 1 length + 1 random PRI interval) at the 325,001 microsecond step. Bursts 2 through 8 randomly fall in successive 1,500,000 microsecond intervals (i.e. Burst 2 falls in the 1,500,001 – 3,000,000 microsecond range).

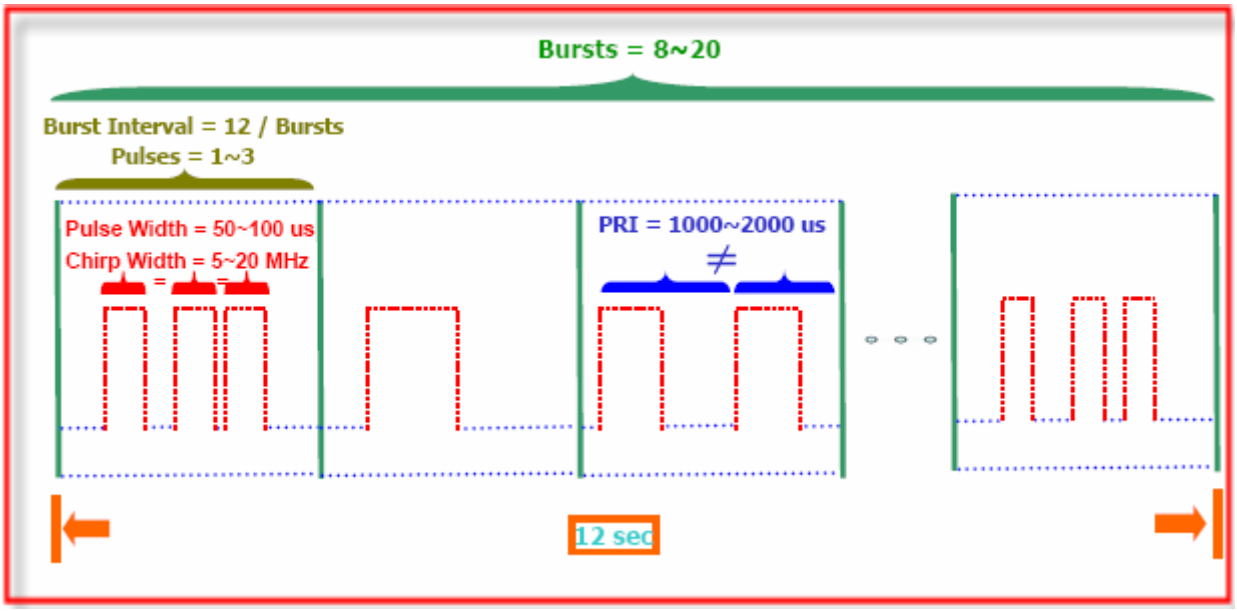

2.6 Frequency Hopping Radar Test Waveform

Radar Type	Pulse Width (μsec)	PRI (μsec)	Pulses per Hop	Hopping Rate (kHz)	Hopping Sequence Length (msec)	Minimum Percentage of Successful Detection	Minimum Trials
6	1	333	9	0.333	300	70%	30

For the Frequency Hopping Radar Type, the same Burst parameters are used for each waveform. The hopping sequence is different for each waveform and a 100-length segment is selected from the hopping sequence defined by the following algorithm:

The first frequency in a hopping sequence is selected randomly from the group of 475 integer frequencies from 5250 – 5724 MHz. Next, the frequency that was just chosen is removed from the group and a frequency is randomly selected from the remaining 474 frequencies in the group. This process continues until all 475 frequencies are chosen for the set. For selection of a random frequency, the frequencies remaining within the group are always treated as equally likely.

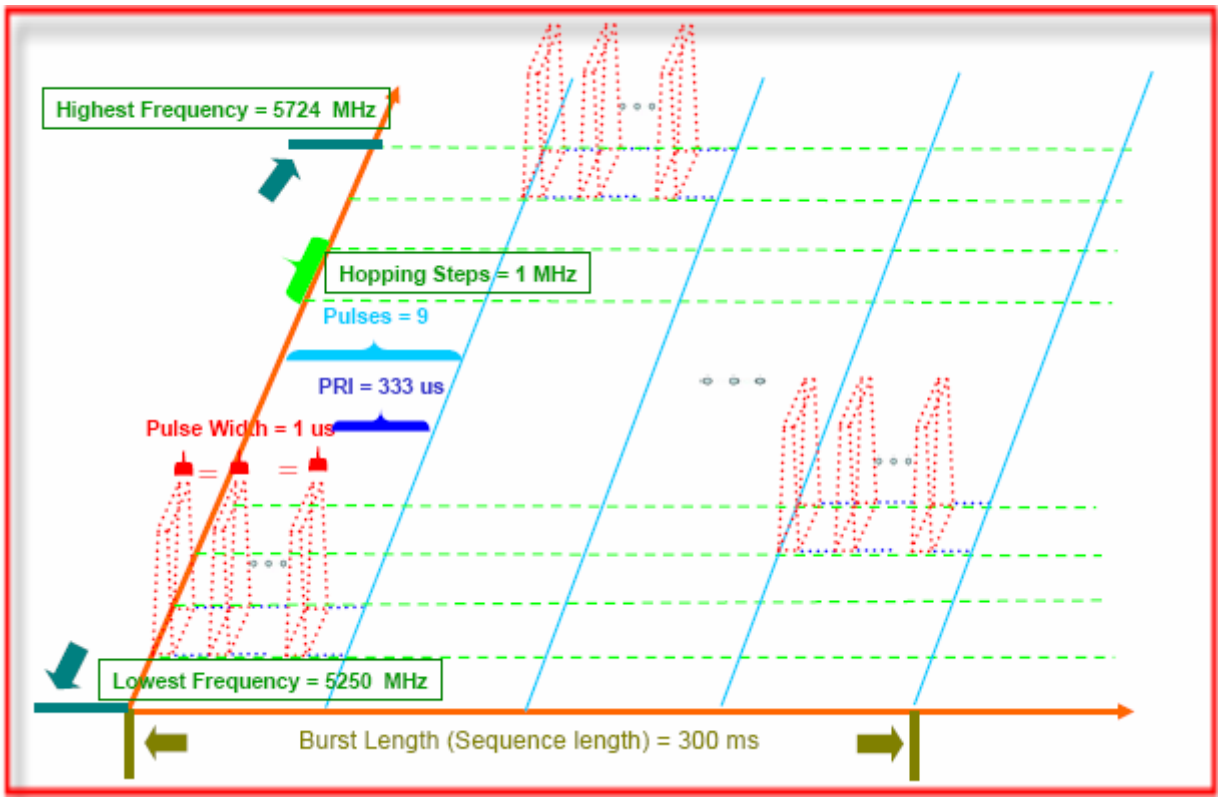

3 Calibration Setup and DFS Test Results

3.1 Calibration of Radar Waveform

3.1.1 Radar Waveform Calibration Procedure

The Interference Radar Detection Threshold Level is (-64) + (17) [dBi] + 1dB = -46 dBm that had been taken into account the output power range and antenna gain. The following equipment setup was used to calibrate the radiated Radar Waveform. A vector signal generator was utilized to establish the test signal level for radar type 0~6. During this process there were no transmissions by either the Master or Client Device. The spectrum analyzer was switched to the zero span (Time Domain) at the frequency of the Radar Waveform generator. Peak detection was used. The spectrum analyzer resolution bandwidth (RBW) and video bandwidth (VBW) were set to 3 MHz to measure the radar waveform. The vector signal generator amplitude was set so that the power level measured at the spectrum analyzer was (-64dBm) + (17) [dBi]+ 1 dB= -46 dBm. Capture the spectrum analyzer plots on radar waveform.

3.1.2 Conducted Calibration Setup

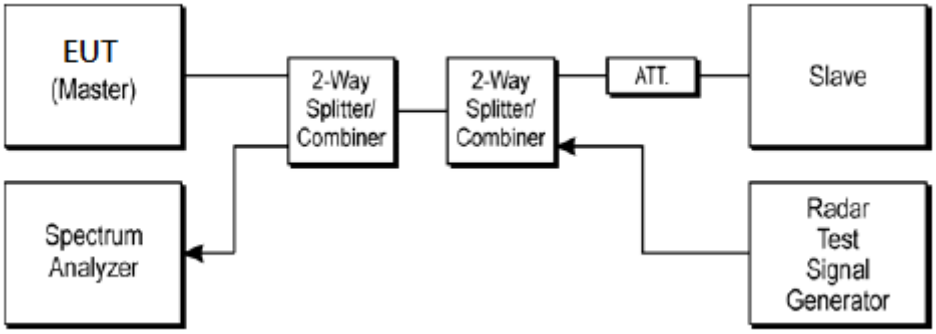

3.1.3 Calibration Deviation

There is no deviation with the original standard.

3.1.4 Radar Waveform Calibration Result

<10MHz/20MHz/30MHz/40MHz /50MH/60MHz/80MHz 5530MHz>

Radar Type 1	Radar Type 2
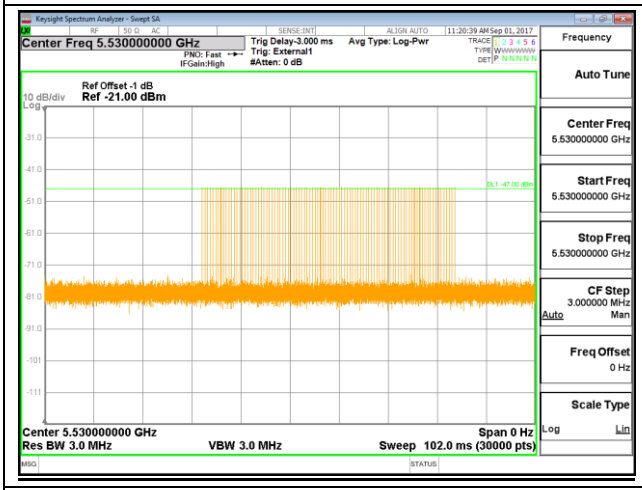	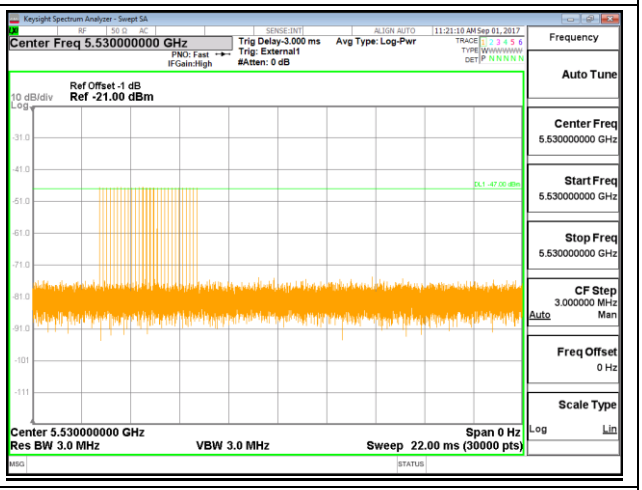
Radar Type 3	**Radar Type 4**
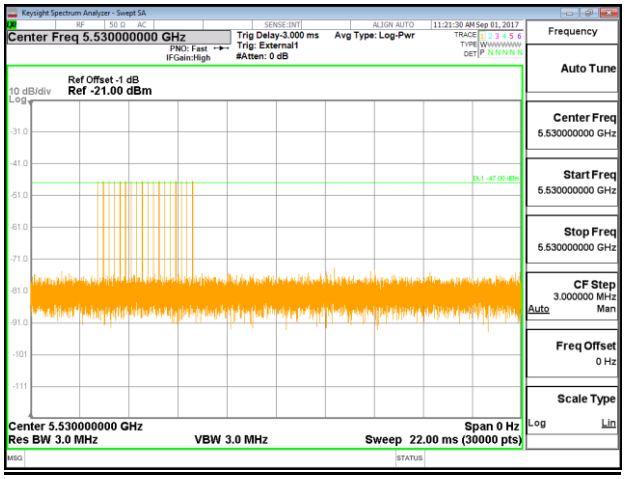	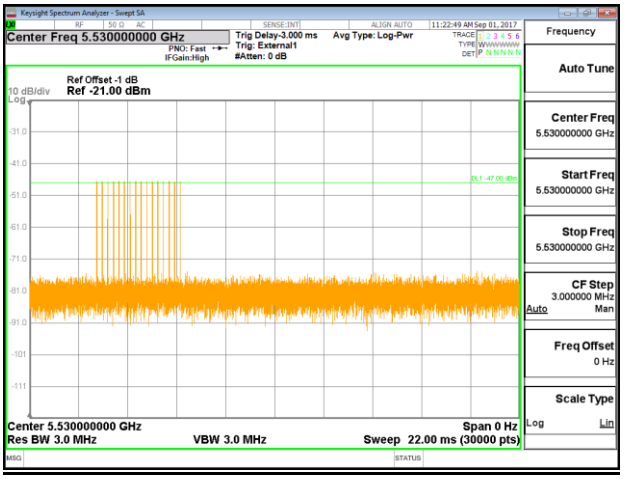
Single Burst of Radar Type 5	**Single Burst of Radar Type 6**
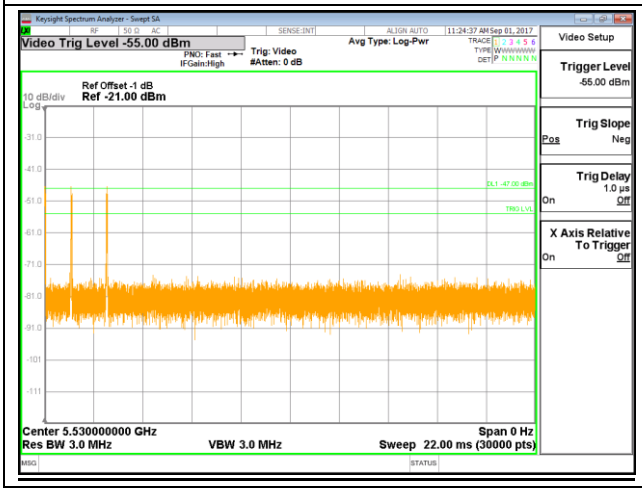	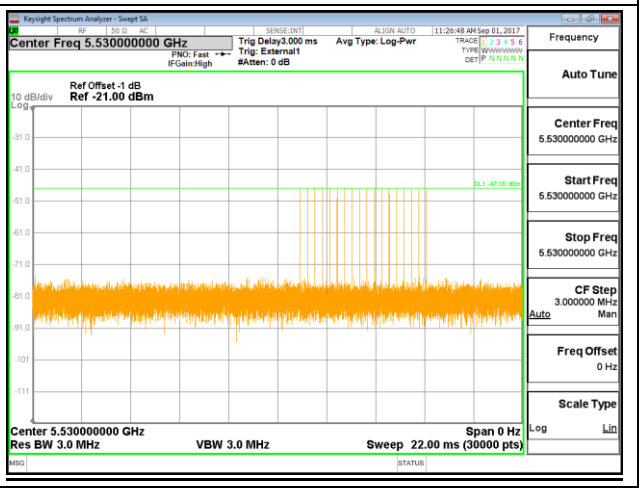

3.2 U-NII Detection Bandwidth (7.8.1)

3.2.1 Limit of U-NII Detection Bandwidth

The U-NII Detection Bandwidth shall contain minimum 100% of the 99% power bandwidth.

During the U-NII Detection Bandwidth detection test, radar type 0 is used and for each frequency step the minimum percentage of detection is 90%. Measurements are performed with no data traffic.

3.2.2 Test Procedures

(1) Adjust the equipment to produce a single burst of the Short Pulse Radar Type 0 at the center frequency of the EUT Operating Channel at the specified DFS Detection Threshold level.

(2) Set the EUT up as a standalone device (no associated Client or Master, as appropriate) and no traffic. Frame based systems will be set to a talk/listen ratio of 0%/100% during this test.

(3) Generate a single radar burst, and note the response of the EUT. Repeat for a minimum of 10 trials. The EUT must detect the Radar Waveform using the specified U-NII Detection Bandwidth criterion.

(4) Starting at the center frequency of the EUT operating Channel, increase the radar frequency in 5 MHz steps, repeating the above test sequence, until the detection rate falls below the U-NII Detection Bandwidth criterion specified in report clause 2.3. Repeat this measurement in 1MHz steps at frequencies 5 MHz below where the detection rate begins to fall. Record the highest frequency (denote as F_H) at which detection is greater than or equal to the U-NII Detection Bandwidth criterion. Recording the detection rate at frequencies above FH is not required to demonstrate compliance.

(5) Starting at the center frequency of the EUT operating Channel, decrease the radar frequency in 5 MHz steps, repeating the above test sequence, until the detection rate falls below the U-NII Detection Bandwidth criterion specified in report clause 2.3. Repeat this measurement in 1MHz steps at frequencies 5 MHz above where the detection rate begins to fall. Record the lowest frequency (denote as F_L) at which detection is greater than or equal to the U-NII Detection Bandwidth criterion. Recording the detection rate at frequencies below FL is not required to demonstrate compliance.

(6) The U-NII Detection Bandwidth is calculated as follows:
U-NII Detection Bandwidth = $F_H - F_L$

3.2.3 Test Setup

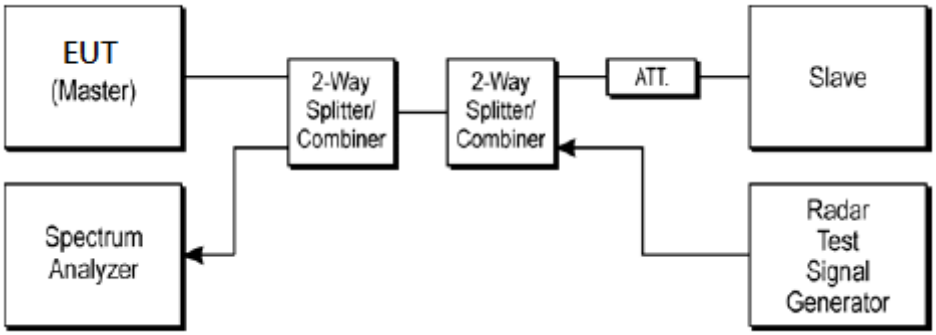

3.2.4 Test Deviation

There is no deviation with the original standard.

3.2.5 Result of U-NII Detection Bandwidth

<10MHz / 5530MHz>

Frequency (MHz)	Fc	Trial Number (Detection = V, No Detection = N)										Rate (%)	F_H/F_L
		1	2	3	4	5	6	7	8	9	10		
5486	-44	Y	N	Y	N	Y	N	Y	N	N	N	40	
5487	-43	Y	Y	Y	Y	Y	Y	Y	Y	N	Y	90	F_L
5488	-42	Y	Y	Y	Y	Y	Y	Y	Y	Y	Y	100	
5489	-41	Y	Y	Y	Y	Y	Y	Y	Y	Y	Y	100	
5490	-40	Y	Y	Y	Y	Y	Y	Y	Y	Y	Y	100	
5491	-39	Y	Y	Y	Y	Y	Y	Y	Y	Y	Y	100	
5492	-38	Y	Y	Y	Y	Y	Y	Y	Y	Y	Y	100	
5493	-37	Y	Y	Y	Y	Y	Y	Y	Y	Y	Y	100	
5494	-36	Y	Y	Y	Y	Y	Y	Y	Y	Y	Y	100	
5495	-35	Y	Y	Y	Y	Y	Y	Y	Y	Y	Y	100	
5496	-34	Y	Y	Y	Y	Y	Y	Y	Y	Y	Y	100	
5497	-33	Y	Y	Y	Y	Y	Y	Y	Y	Y	Y	100	
5498	-32	Y	Y	Y	Y	Y	Y	Y	Y	Y	Y	100	
5499	-31	Y	Y	Y	Y	Y	Y	Y	Y	Y	Y	100	
5500	-30	Y	Y	Y	Y	Y	Y	Y	Y	Y	Y	100	
5501	-29	Y	Y	Y	Y	Y	Y	Y	Y	Y	Y	100	
5502	-28	Y	Y	Y	Y	Y	Y	Y	Y	Y	Y	100	
5503	-27	Y	Y	Y	Y	Y	Y	Y	Y	Y	Y	100	
5504	-26	Y	Y	Y	Y	Y	Y	Y	Y	Y	Y	100	
5505	-25	Y	Y	Y	Y	Y	Y	Y	Y	Y	Y	100	
5506	-24	Y	Y	Y	Y	Y	Y	Y	Y	Y	Y	100	
5507	-23	Y	Y	Y	Y	Y	Y	Y	Y	Y	Y	100	
5508	-22	Y	Y	Y	Y	Y	Y	Y	Y	Y	Y	100	
5509	-21	Y	Y	Y	Y	Y	Y	Y	Y	Y	Y	100	
5510	-20	Y	Y	Y	Y	Y	Y	Y	Y	Y	Y	100	
5511	-19	Y	Y	Y	Y	Y	Y	Y	Y	Y	Y	100	
5512	-18	Y	Y	Y	Y	Y	Y	Y	Y	Y	Y	100	
5513	-17	Y	Y	Y	Y	Y	Y	Y	Y	Y	Y	100	
5514	-16	Y	Y	Y	Y	Y	Y	Y	Y	Y	Y	100	
5515	-15	Y	Y	Y	Y	Y	Y	Y	Y	Y	Y	100	

5516	-14	Y	Y	Y	Y	Y	Y	Y	Y	Y	Y	100	
5517	-13	Y	Y	Y	Y	Y	Y	Y	Y	Y	Y	100	
5518	-12	Y	Y	Y	Y	Y	Y	Y	Y	Y	Y	100	
5519	-11	Y	Y	Y	Y	Y	Y	Y	Y	Y	Y	100	
5520	-10	Y	Y	Y	Y	Y	Y	Y	Y	Y	Y	100	
5521	-9	Y	Y	Y	Y	Y	Y	Y	Y	Y	Y	100	
5522	-8	Y	Y	Y	Y	Y	Y	Y	Y	Y	Y	100	
5523	-7	Y	Y	Y	Y	Y	Y	Y	Y	Y	Y	100	
5524	-6	Y	Y	Y	Y	Y	Y	Y	Y	Y	Y	100	
5525	-5	Y	Y	Y	Y	Y	Y	Y	Y	Y	Y	100	
5526	-4	Y	Y	Y	Y	Y	Y	Y	Y	Y	Y	100	
5527	-3	Y	Y	Y	Y	Y	Y	Y	Y	Y	Y	100	
5528	-2	Y	Y	Y	Y	Y	Y	Y	Y	Y	Y	100	
5529	-1	Y	Y	Y	Y	Y	Y	Y	Y	Y	Y	100	
5530	0	Y	Y	Y	Y	Y	Y	Y	Y	Y	Y	100	
5531	+1	Y	Y	Y	Y	Y	Y	Y	Y	Y	Y	100	
5532	+2	Y	Y	Y	Y	Y	Y	Y	Y	Y	Y	100	
5533	+3	Y	Y	Y	Y	Y	Y	Y	Y	Y	Y	100	
5534	+4	Y	Y	Y	Y	Y	Y	Y	Y	Y	Y	100	
5535	+5	Y	Y	Y	Y	Y	Y	Y	Y	Y	Y	100	
5536	+6	Y	Y	Y	Y	Y	Y	Y	Y	Y	Y	100	
5537	+7	Y	Y	Y	Y	Y	Y	Y	Y	Y	Y	100	
5538	+8	Y	Y	Y	Y	Y	Y	Y	Y	Y	Y	100	
5539	+9	Y	Y	Y	Y	Y	Y	Y	Y	Y	Y	100	
5540	+10	Y	Y	Y	Y	Y	Y	Y	Y	Y	Y	100	
5541	+11	Y	Y	Y	Y	Y	Y	Y	Y	Y	Y	100	
5542	+12	Y	Y	Y	Y	Y	Y	Y	Y	Y	Y	100	
5543	+13	Y	Y	Y	Y	Y	Y	Y	Y	Y	Y	100	
5544	+14	Y	Y	Y	Y	Y	Y	Y	Y	Y	Y	100	
5545	+15	Y	Y	Y	Y	Y	Y	Y	Y	Y	Y	100	
5546	+16	Y	Y	Y	Y	Y	Y	Y	Y	Y	Y	100	
5547	+17	Y	Y	Y	Y	Y	Y	Y	Y	Y	Y	100	
5548	+18	Y	Y	Y	Y	Y	Y	Y	Y	Y	Y	100	
5549	+19	Y	Y	Y	Y	Y	Y	Y	Y	Y	Y	100	
5550	+20	Y	Y	Y	Y	Y	Y	Y	Y	Y	Y	100	
5551	+21	Y	Y	Y	Y	Y	Y	Y	Y	Y	Y	100	

5552	+22	Y	Y	Y	Y	Y	Y	Y	Y	Y	Y	100	
5553	+23	Y	Y	Y	Y	Y	Y	Y	Y	Y	Y	100	
5554	+24	Y	Y	Y	Y	Y	Y	Y	Y	Y	Y	100	
5555	+25	Y	Y	Y	Y	Y	Y	Y	Y	Y	Y	100	
5556	+26	Y	Y	Y	Y	Y	Y	Y	Y	Y	Y	100	
5557	+27	Y	Y	Y	Y	Y	Y	Y	Y	Y	Y	100	
5558	+28	Y	Y	Y	Y	Y	Y	Y	Y	Y	Y	100	
5559	+29	Y	Y	Y	Y	Y	Y	Y	Y	Y	Y	100	
5560	+30	Y	Y	Y	Y	Y	Y	Y	Y	Y	Y	100	
5561	+31	Y	Y	Y	Y	Y	Y	Y	Y	Y	Y	100	
5562	+32	Y	Y	Y	Y	Y	Y	Y	Y	Y	Y	100	
5563	+33	Y	Y	Y	Y	Y	Y	Y	Y	Y	Y	100	
5564	+34	Y	Y	Y	Y	Y	Y	Y	Y	Y	Y	100	
5565	+35	Y	Y	Y	Y	Y	Y	Y	Y	Y	Y	100	
5566	+36	Y	Y	Y	Y	Y	Y	Y	Y	Y	Y	100	
5567	+37	Y	Y	Y	Y	Y	Y	Y	Y	Y	Y	100	
5568	+38	Y	Y	Y	Y	Y	Y	Y	Y	Y	Y	100	
5569	+39	Y	Y	Y	Y	Y	Y	Y	Y	Y	Y	100	
5570	+40	Y	Y	Y	Y	Y	Y	Y	Y	Y	Y	100	
5571	+41	Y	Y	Y	Y	Y	Y	Y	Y	Y	Y	100	**F_H**
5572	+42	Y	Y	N	Y	Y	Y	Y	Y	N	N	70	

Detection Bandwidth = F_H – F_L =**5571** – **5487** = **84** MHz

EUT 99% Bandwidth = **10.034** MHz (Refer to channel 106)

<20MHz / 5530MHz>

Frequency (MHz)	Fc	Trial Number (Detection = V, No Detection = N)										Rate (%)	F_H/F_L
		1	2	3	4	5	6	7	8	9	10		
5519	-11	N	N	N	N	N	N	N	N	N	N	0	
5520	-10	Y	Y	Y	Y	Y	Y	Y	Y	Y	Y	100	F_L
5521	-9	Y	Y	Y	Y	Y	Y	Y	Y	Y	Y	100	
5522	-8	Y	Y	Y	Y	Y	Y	Y	Y	Y	Y	100	
5523	-7	Y	Y	Y	Y	Y	Y	Y	Y	Y	Y	100	
5524	-6	Y	Y	Y	Y	Y	Y	Y	Y	Y	Y	100	
5525	-5	Y	Y	Y	Y	Y	Y	Y	Y	Y	Y	100	
5530	0	Y	Y	Y	Y	Y	Y	Y	Y	Y	Y	100	
5535	+5	Y	Y	Y	Y	Y	Y	Y	Y	Y	Y	100	
5536	+6	Y	Y	Y	Y	Y	Y	Y	Y	Y	Y	100	
5537	+7	Y	Y	Y	Y	Y	Y	Y	Y	Y	Y	100	
5538	+8	Y	Y	Y	Y	Y	Y	Y	Y	Y	Y	100	
5539	+9	Y	Y	Y	Y	Y	Y	Y	Y	Y	Y	100	
5540	+10	Y	Y	Y	Y	Y	Y	Y	Y	Y	Y	100	F_H
5541	+11	N	N	N	N	N	N	N	N	N	N	0	

Detection Bandwidth = F_H – F_L =**5540** – **5520** = **20** MHz

EUT 99% Bandwidth = **18.362** MHz (Refer to channel 106)

<30MHz / 5530MHz>

Frequency (MHz)	Fc	Trial Number (Detection = V, No Detection = N)										Rate (%)	F_H/F_L
		1	2	3	4	5	6	7	8	9	10		
5514	-16	N	N	N	N	N	N	N	N	N	N	0	
5515	-15	Y	Y	Y	Y	Y	Y	Y	Y	Y	Y	100	F_L
5516	-14	Y	Y	Y	Y	Y	Y	Y	Y	Y	Y	100	
5517	-13	Y	Y	Y	Y	Y	Y	Y	Y	Y	Y	100	
5518	-12	Y	Y	Y	Y	Y	Y	Y	Y	Y	Y	100	
5519	-11	Y	Y	Y	Y	Y	Y	Y	Y	Y	Y	100	
5520	-10	Y	Y	Y	Y	Y	Y	Y	Y	Y	Y	100	
5525	-5	Y	Y	Y	Y	Y	Y	Y	Y	Y	Y	100	
5530	0	Y	Y	Y	Y	Y	Y	Y	Y	Y	Y	100	
5535	+5	Y	Y	Y	Y	Y	Y	Y	Y	Y	Y	100	
5540	+10	Y	Y	Y	Y	Y	Y	Y	Y	Y	Y	100	
5541	+11	Y	Y	Y	Y	Y	Y	Y	Y	Y	Y	100	
5542	+12	Y	Y	Y	Y	Y	Y	Y	Y	Y	Y	100	
5543	+13	Y	Y	Y	Y	Y	Y	Y	Y	Y	Y	100	
5544	+14	Y	Y	Y	Y	Y	Y	Y	Y	Y	Y	100	
5545	+15	Y	Y	Y	Y	Y	Y	Y	Y	Y	Y	100	F_H
5546	+16	N	N	N	N	N	N	N	N	N	N	0	

Detection Bandwidth = F_H – F_L =**5545** – **5515** = **30** MHz

EUT 99% Bandwidth = **26.195** MHz (Refer to channel 106)

<40MHz / 5530MHz>

Frequency (MHz)	Fc	Trial Number (Detection = V, No Detection = N)										Rate (%)	F_H/F_L
		1	2	3	4	5	6	7	8	9	10		
5409	-21	N	N	N	N	N	N	N	N	N	N	0	
5510	-20	Y	Y	Y	Y	Y	Y	Y	Y	Y	Y	100	F_L
5511	-19	Y	Y	Y	Y	Y	Y	Y	Y	Y	Y	100	
5512	-18	Y	Y	Y	Y	Y	Y	Y	Y	Y	Y	100	
5513	-17	Y	Y	Y	Y	Y	Y	Y	Y	Y	Y	100	
5514	-16	Y	Y	Y	Y	Y	Y	Y	Y	Y	Y	100	
5515	-15	Y	Y	Y	Y	Y	Y	Y	Y	Y	Y	100	
5520	-10	Y	Y	Y	Y	Y	Y	Y	Y	Y	Y	100	
5525	-5	Y	Y	Y	Y	Y	Y	Y	Y	Y	Y	100	
5530	0	Y	Y	Y	Y	Y	Y	Y	Y	Y	Y	100	
5535	+5	Y	Y	Y	Y	Y	Y	Y	Y	Y	Y	100	
5540	+10	Y	Y	Y	Y	Y	Y	Y	Y	Y	Y	100	
5545	+15	Y	Y	Y	Y	Y	Y	Y	Y	Y	Y	100	
5546	+16	Y	Y	Y	Y	Y	Y	Y	Y	Y	Y	100	
5547	+17	Y	Y	Y	Y	Y	Y	Y	Y	Y	Y	100	
5548	+18	Y	Y	Y	Y	Y	Y	Y	Y	Y	Y	100	
5549	+19	Y	Y	Y	Y	Y	Y	Y	Y	Y	Y	100	
5550	+20	Y	Y	Y	Y	Y	Y	Y	Y	Y	Y	100	F_H
5551	+21	N	N	N	N	N	N	N	N	N	N	0	

Detection Bandwidth = F_H – F_L =**5550** – **5510** = **40** MHz

EUT 99% Bandwidth = **36.440** MHz (Refer to channel 106)

<50MHz / 5530MHz>

Frequency (MHz)	Fc	Trial Number (Detection = V, No Detection = N)										Rate (%)	F_H/F_L
		1	2	3	4	5	6	7	8	9	10		
5505	-25	N	N	N	N	N	N	N	N	N	N	0	
5506	-24	Y	Y	Y	Y	Y	Y	Y	Y	Y	Y	100	F_L
5507	-23	Y	Y	Y	Y	Y	Y	Y	Y	Y	Y	100	
5508	-22	Y	Y	Y	Y	Y	Y	Y	Y	Y	Y	100	
5509	-21	Y	Y	Y	Y	Y	Y	Y	Y	Y	Y	100	
5510	-20	Y	Y	Y	Y	Y	Y	Y	Y	Y	Y	100	
5515	-15	Y	Y	Y	Y	Y	Y	Y	Y	Y	Y	100	
5520	-10	Y	Y	Y	Y	Y	Y	Y	Y	Y	Y	100	
5525	-5	Y	Y	Y	Y	Y	Y	Y	Y	Y	Y	100	
5530	0	Y	Y	Y	Y	Y	Y	Y	Y	Y	Y	100	
5535	+5	Y	Y	Y	Y	Y	Y	Y	Y	Y	Y	100	
5540	+10	Y	Y	Y	Y	Y	Y	Y	Y	Y	Y	100	
5545	+15	Y	Y	Y	Y	Y	Y	Y	Y	Y	Y	100	
5550	+20	Y	Y	Y	Y	Y	Y	Y	Y	Y	Y	100	
5551	+21	Y	Y	Y	Y	Y	Y	Y	Y	Y	Y	100	
5552	+22	Y	Y	Y	Y	Y	Y	Y	Y	Y	Y	100	
5553	+23	Y	Y	Y	Y	Y	Y	Y	Y	Y	Y	100	
5554	+24	Y	Y	Y	Y	Y	Y	Y	Y	Y	Y	100	F_H
5555	+25	N	N	N	N	N	N	N	N	N	N	0	

Detection Bandwidth = F_H – F_L =**5554** – **5506** = **48** MHz

EUT 99% Bandwidth = **44.473** MHz (Refer to channel 106)

<60MHz / 5530MHz>

Frequency (MHz)	Fc	Trial Number (Detection = V, No Detection = N)										Rate (%)	F_H/F_L
		1	2	3	4	5	6	7	8	9	10		
5500	-30	N	N	N	N	N	N	N	N	N	N	0	
5501	-29	Y	Y	Y	Y	Y	Y	N	Y	Y	Y	90	F_L
5502	-28	Y	Y	Y	Y	Y	Y	Y	Y	Y	Y	100	
5503	-27	Y	Y	Y	Y	Y	Y	Y	Y	Y	Y	100	
5504	-26	Y	Y	Y	Y	Y	Y	Y	Y	Y	Y	100	
5505	-25	Y	Y	Y	Y	Y	Y	Y	Y	Y	Y	100	
5510	-20	Y	Y	Y	Y	Y	Y	Y	Y	Y	Y	100	
5515	-15	Y	Y	Y	Y	Y	Y	Y	Y	Y	Y	100	
5520	-10	Y	Y	Y	Y	Y	Y	Y	Y	Y	Y	100	
5525	-5	Y	Y	Y	Y	Y	Y	Y	Y	Y	Y	100	
5530	0	Y	Y	Y	Y	Y	Y	Y	Y	Y	Y	100	
5535	+5	Y	Y	Y	Y	Y	Y	Y	Y	Y	Y	100	
5540	+10	Y	Y	Y	Y	Y	Y	Y	Y	Y	Y	100	
5545	+15	Y	Y	Y	Y	Y	Y	Y	Y	Y	Y	100	
5550	+20	Y	Y	Y	Y	Y	Y	Y	Y	Y	Y	100	
5555	+25	Y	Y	Y	Y	Y	Y	Y	Y	Y	Y	100	
5556	+26	Y	Y	Y	Y	Y	Y	Y	Y	Y	Y	100	
5557	+27	Y	Y	Y	Y	Y	Y	Y	Y	Y	Y	100	
5558	+28	Y	Y	Y	Y	Y	Y	Y	Y	Y	Y	100	
5559	+29	Y	Y	Y	Y	Y	Y	Y	Y	Y	Y	100	F_H
5560	+30	N	N	N	N	N	N	N	N	N	N	0	

Detection Bandwidth = F_H – F_L =**5559** – **5501** = **58** MHz

EUT 99% Bandwidth = **52.573** MHz (Refer to channel 106)

<80MHz / 5530MHz>

Frequency (MHz)	Fc	Trial Number (Detection = V, No Detection = N)										Rate (%)	F_H/F_L
		1	2	3	4	5	6	7	8	9	10		
5489	-41	N	N	N	N	N	N	N	N	N	N	0	
5490	-40	Y	Y	Y	Y	Y	Y	Y	Y	Y	Y	100	F_L
5491	-39	Y	Y	Y	Y	Y	Y	Y	Y	Y	Y	100	
5492	-38	Y	Y	Y	Y	Y	Y	Y	Y	Y	Y	100	
5493	-37	Y	Y	Y	Y	Y	Y	Y	Y	Y	Y	100	
5494	-36	Y	Y	Y	Y	Y	Y	Y	Y	Y	Y	100	
5495	-35	Y	Y	Y	Y	Y	Y	Y	Y	Y	Y	100	
5500	-30	Y	Y	Y	Y	Y	Y	Y	Y	Y	Y	100	
5505	-25	Y	Y	Y	Y	Y	Y	Y	Y	Y	Y	100	
5510	-20	Y	Y	Y	Y	Y	Y	Y	Y	Y	Y	100	
5515	-15	Y	Y	Y	Y	Y	Y	Y	Y	Y	Y	100	
5520	-10	Y	Y	Y	Y	Y	Y	Y	Y	Y	Y	100	
5525	-5	Y	Y	Y	Y	Y	Y	Y	Y	Y	Y	100	
5530	0	Y	Y	Y	Y	Y	Y	Y	Y	Y	Y	100	
5535	+5	Y	Y	Y	Y	Y	Y	Y	Y	Y	Y	100	
5540	+10	Y	Y	Y	Y	Y	Y	Y	Y	Y	Y	100	
5545	+15	Y	Y	Y	Y	Y	Y	Y	Y	Y	Y	100	
5550	+20	Y	Y	Y	Y	Y	Y	Y	Y	Y	Y	100	
5555	+25	Y	Y	Y	Y	Y	Y	Y	Y	Y	Y	100	
5560	+30	Y	Y	Y	Y	Y	Y	Y	Y	Y	Y	100	
5565	+35	Y	Y	Y	Y	Y	Y	Y	Y	Y	Y	100	
5566	+36	Y	Y	Y	Y	Y	Y	Y	Y	Y	Y	100	
5567	+37	Y	Y	Y	Y	Y	Y	Y	Y	Y	Y	100	
5568	+38	Y	Y	Y	Y	Y	Y	Y	Y	Y	Y	100	
5569	+39	Y	Y	Y	Y	Y	Y	Y	Y	Y	Y	100	
5570	+40	Y	Y	Y	Y	Y	Y	Y	Y	Y	Y	100	F_H
5571	+41	N	N	N	N	N	N	N	N	N	N	0	

Detection Bandwidth = F_H – F_L =**5570** – **5490** = **80** MHz

EUT 99% Bandwidth = **76.008** MHz (Refer to channel 106)

3.3 Channel Availability Check (7.8.2)

3.3.1 Limit of Channel Availability Check

The Initial Channel Availability Check Time tests that the EUT does not emit beacon, control, or data signals on the test Channel until the power-up sequence has been completed and the U-NII device checks for radar waveforms for **one minute** on the test Channel.

3.3.2 Test Procedures

3.3.2.1 Initial Channel Availability Check Time

This test does not use any radar waveforms and only needs to be performed one time.

(1) The U-NII devices will be powered on and be instructed to operate on the appropriate U-NII Channel that must incorporate DFS functions. At the same time the EUT is powered on, the spectrum analyzer will be set to zero span mode with a 3 MHz RBW and 3 MHz VBW on the Channel occupied by the radar (Chr) with a 2.5 minute sweep time. The spectrum analyzer's sweep will be started at the same time power is applied to the U-NII device.
(2) The EUT should not transmit any beacon or data transmissions until at least 1 minute after the completion of the power-on cycle.

3.3.2.2 Radar Burst at the Beginning of the Channel Availability Check Time

The steps below define the procedure to verify successful radar detection on the test Channel during a period equal to the Channel Availability Check Time and avoidance of operation on that Channel when a radar Burst with a level equal to the DFS Detection Threshold + 1 dB occurs at the beginning of the Channel Availability Check Time. This is illustrated in Figure 15.

(1) The Radar Waveform generator and EUT are connected using the applicable test setup and the power of the EUT is switched off.
(2) The EUT is powered on at T0. T1 denotes the instant when the EUT has completed its power-up sequence (Tpower_up). The Channel Availability Check Time commences on Chr at instant T1 and will end no sooner than T1 + Tch_avail_check.
(3) A single Burst of one of the Short Pulse Radar Types 1-4 will commence within a 6 second window starting at T1. An additional 1 dB is added to the radar test signal to ensure it is at or above the DFS Detection Threshold, accounting for equipment variations/errors.
(4) Visual indication or measured results on the EUT of successful detection of the radar Burst will be recorded and reported. Observation of Chr for EUT emissions will continue for 2.5 minutes after the radar Burst has been generated.
(5) Verify that during the 2.5 minute measurement window no EUT transmissions occurred on Chr. The Channel Availability Check results will be recorded.

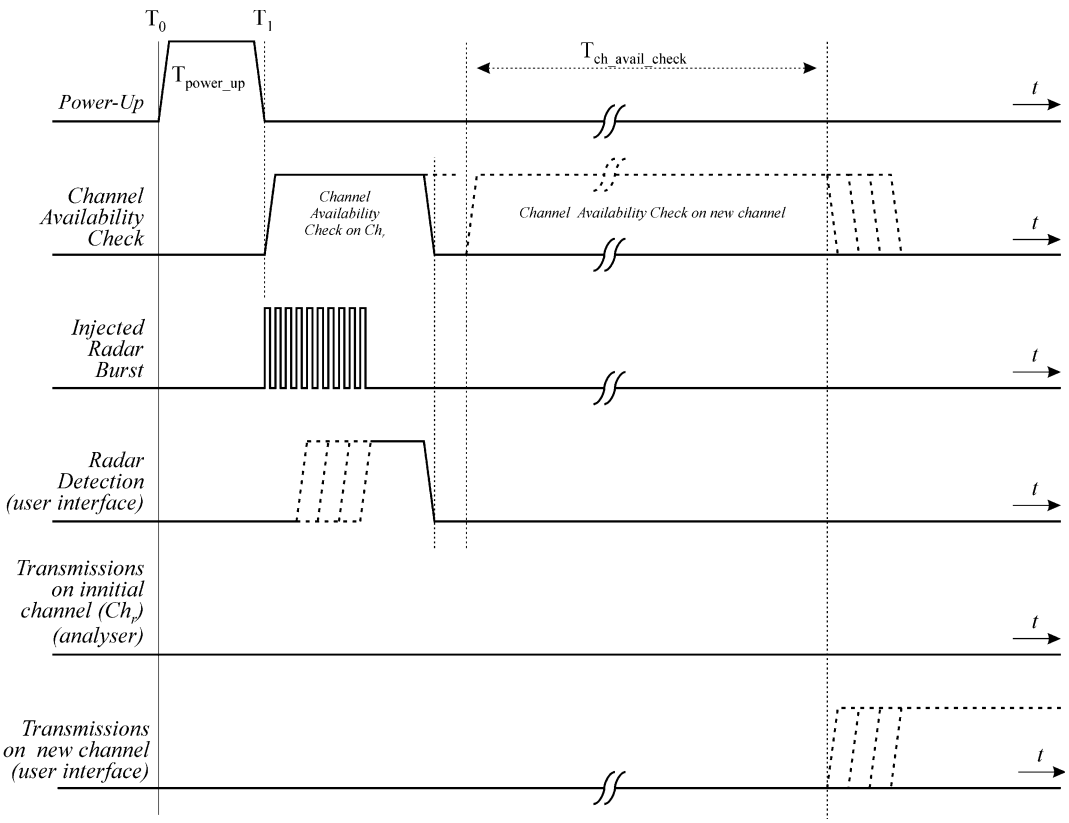

Figure 15: Example of timing for radar testing at the beginning of the Channel Availability Check Time

3.3.2.3 Radar Burst at the End of the Channel Availability Check Time

The steps below define the procedure to verify successful radar detection on the test Channel during a period equal to the Channel Availability Check Time and avoidance of operation on that Channel when a radar Burst with a level equal to the DFS Detection Threshold + 1dB occurs at the end of the Channel Availability Check Time. This is illustrated in Figure 16.

(1) The Radar Waveform generator and EUT are connected using the applicable test setup and the power of the EUT is switched off.
(2) The EUT is powered on at T0. T1 denotes the instant when the EUT has completed its power-up sequence (Tpower_up). The Channel Availability Check Time commences on Chr at instant T1 and will end no sooner than T1 + Tch_avail_check.
(3) A single Burst of one of the Short Pulse Radar Types 1-4 will commence within a 6 second window starting at T1 + 54 seconds. An additional 1 dB is added to the radar test signal to ensure it is at or above the DFS Detection Threshold, accounting for equipment variations/errors.
(4) Visual indication or measured results on the EUT of successful detection of the radar Burst will be recorded and reported. Observation of Chr for EUT emissions will continue for 2.5 minutes after the radar Burst has been generated.
(5) Verify that during the 2.5 minute measurement window no EUT transmissions occurred on Chr. The Channel Availability Check results will be recorded.

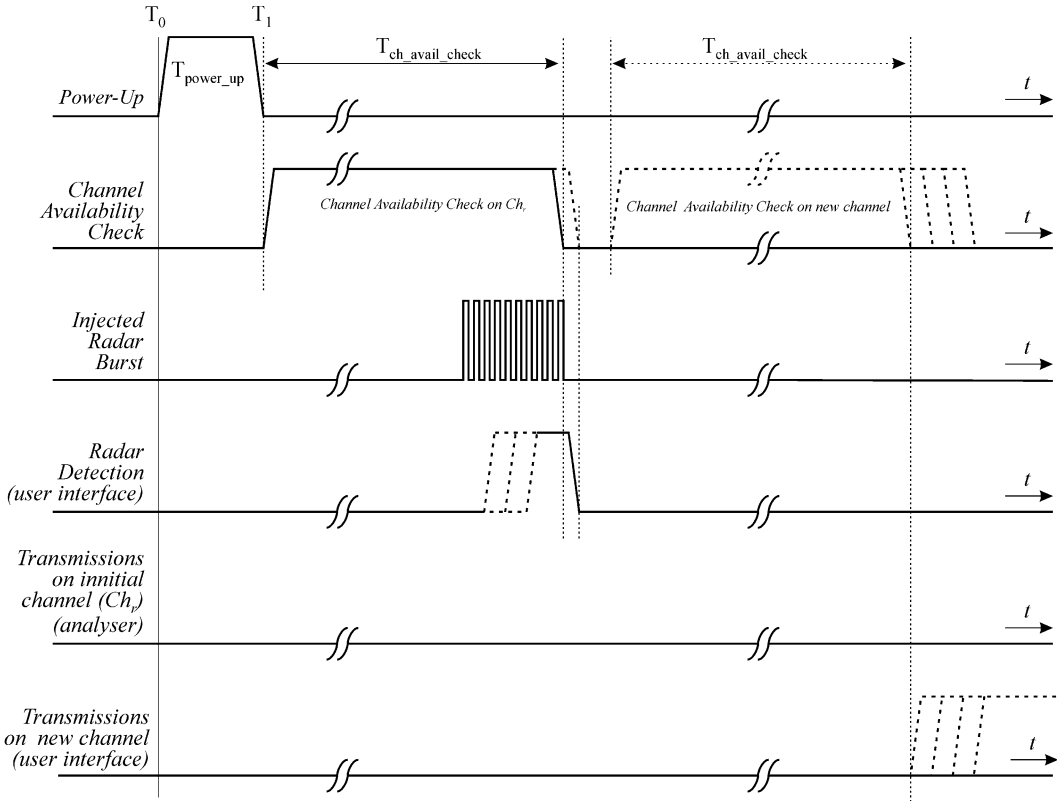

Figure 16: Example of timing for radar testing towards the end of the Channel Availability Check Time

3.3.3 Test Setup

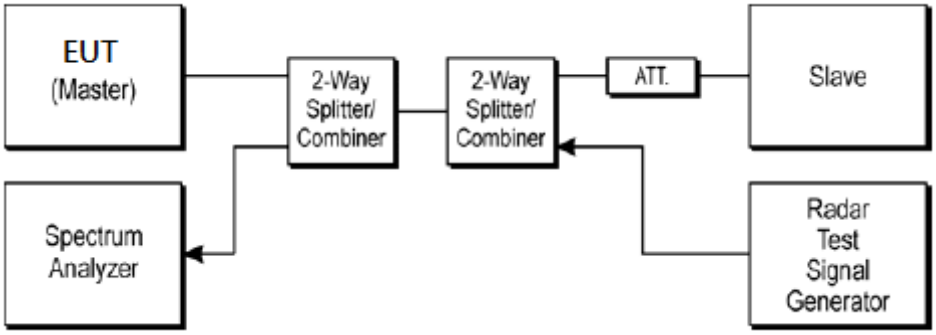

3.3.4 Test Deviation

There is no deviation with the original standard.

3.3.5 Result of Channel Availability Check Time

<80MHz / 5530MHz>

EUT Power up and Initial Channel Availability Check Time	
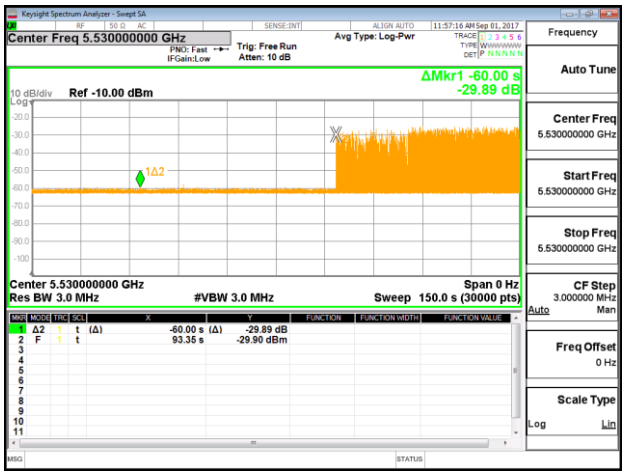	
Radar Burst at the Beginning of the Channel Availability Check Time	**Radar Burst at the End of the Channel Availability Check Time**
	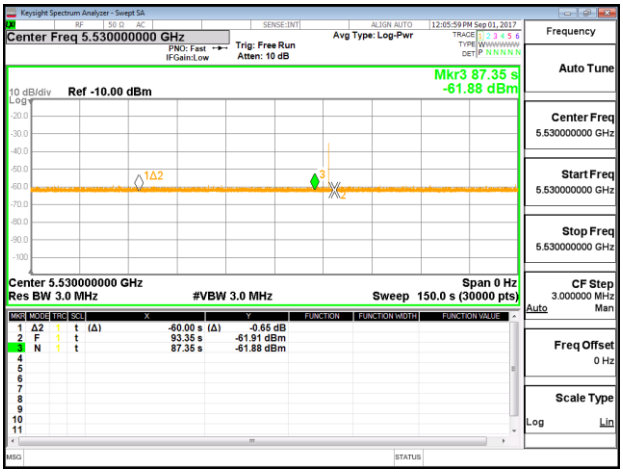

3.4 In-Service Monitoring: Channel Move Time, Channel Closing Transmission Time and Non-Occupancy Period (7.8.3)

3.4.1 Limit of In-Service Monitoring

The EUT has In-Service Monitoring function to continuously monitor the radar signals, If radar is detected, it must leave the channel (Shutdown). The Channel Move Time to cease all transmissions on the current Channel upon detection of a Radar Waveform above the DFS Detection Threshold within 10 sec. The total duration of Channel Closing Transmission Time is comprised of 200 milliseconds starting at the beginning of the Channel Move Time plus any additional intermittent control signals required to facilitate Channel changes (an aggregate of 60 milliseconds) during the remainder of the 10 second period. The aggregate duration of control signals will not count quiet periods in between transmissions.

Non-Occupancy Period time is 30 minute during which a Channel will not be utilized after a Radar Waveform is detected on that Channel.

3.4.2 Test Procedures

(1) One frequency will be chosen from the Operating Channels of the EUT within the 5250-5350 MHz or 5470-5725 MHz bands. For 802.11 devices, the test frequency must contain control signals. This can be verified by disabling channel loading and monitoring the spectrum analyzer. If no control signals are detected, another frequency must be selected within the emission bandwidth where control signals are detected.

(2) In case the EUT is a Master Device, a U-NII device operating as a Client Device will be used and it is assumed that the Client will associate with the EUT (Master). For radiated tests, the emissions of the Radar Waveform generator will be directed towards the Master Device. If the Master Device has antenna gain, the main beam of the antenna will be directed toward the radar emitter. Vertical polarization is used for testing.

(3) The TCP protocol unicast data stream was generated by the iperf software command line with at least 17% activity ratio over any 100ms period.

(4) Timing plots are reported with calculations demonstrating a minimum channel loading of approximately 17% or greater. For example, channel loading can be estimated by setting the spectrum analyzer for zero span and approximate the Time On/ (Time On + Off Time).

(5) At time T0 the Radar Waveform generator sends a Burst of pulses for one of the Short Pulse Radar Types 1-4 at DFS Detection Threshold levels on the Operating Channel. An additional 1 dB is added to the radar test signal to ensure it is at or above the DFS Detection Threshold, accounting for equipment variations/errors.

(6) Observe the transmissions of the EUT at the end of the radar Burst on the Operating Channel for duration greater than 10 seconds. Measure and record the transmissions from the EUT during the observation time (Channel Move Time). Measure and record the Channel Move Time and Channel Closing Transmission Time if radar detection occurs.

(7) When operating as a Master Device, monitor the EUT for more than 30 minutes following instant T2 to verify that the EUT does not resume any transmissions on this Channel. Perform this test once and record the measurement result.

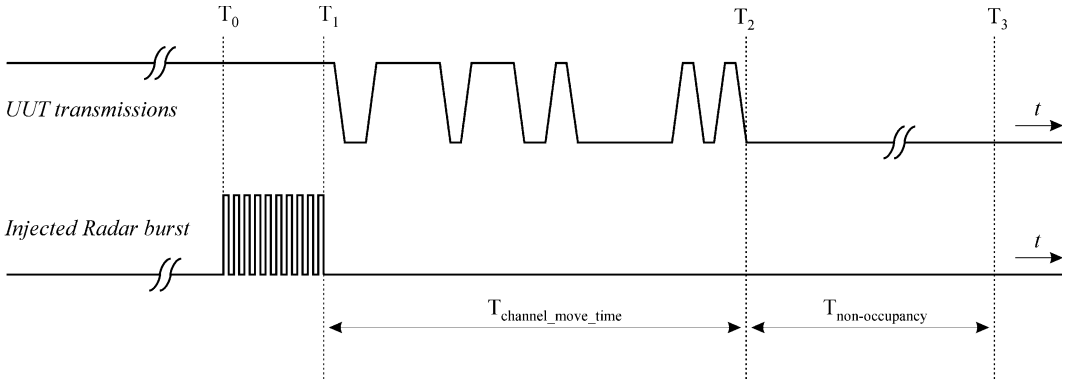

(8) One 12 seconds plot is reported for the Short Pulse Radar Type 0.

(9) Measurement of the aggregate duration of the Channel Closing Transmission Time method. With the spectrum analyzer set to zero span tuned to the center frequency of the EUT operating channel at the radar simulated frequency, peak detection, and max hold, the dwell time per bin is given by: Dwell (0.4ms)= S (12000ms) / B (30000); where Dwell is the dwell time per spectrum analyzer sampling bin, S is the sweep time and B is the number of spectrum analyzer sampling bins. An upper bound of the aggregate duration of the intermittent control signals of Channel Closing Transmission Time is calculated by: C (ms)= N X Dwell (0.4 ms); where C is the Closing Time, N is the number of spectrum analyzer sampling bins (intermittent control signals) showing a U-NII transmission and Dwell is the dwell time per bin.

3.4.3 Test Setup

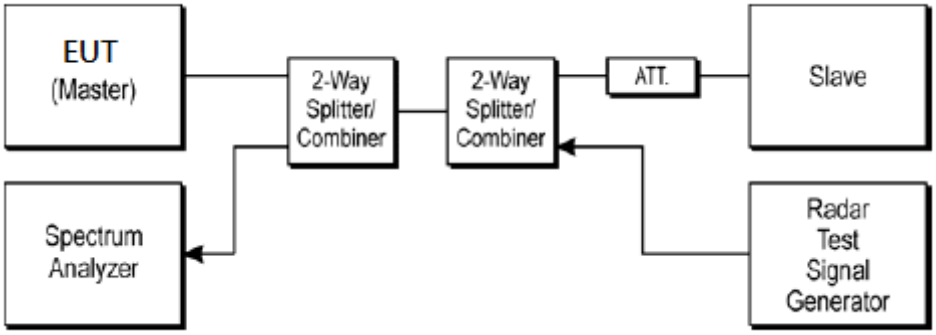

3.4.4 Test Deviation

There is no deviation with the original standard.

3.4.5 Result of Channel Move Time, Channel Closing Transmission Time and Non-Occupancy Period for Client Beacon Test

Test Mode :	Master	**Temperature :**	24.3-25.2℃
Test Engineer :	PH Yang	**Relative Humidity :**	44-47%

BW / Channel	Test Item	Test Result	Limit	Pass/Fail
80MHz / 5530MHz	Channel Move Time	0.1404 s	＜ 10s	Pass
	Channel Closing Transmission Time	200ms + 0 ms	＜ 260ms	Pass
	Non-Occupancy Period	≥ 30	≥ 30 min	Pass

Note: The Channel Closing Transmission Time is comprised of 200 milliseconds starting at the beginning of the Channel Move Time plus any additional intermittent control signals required to facilitate a Channel move (an aggregate of 60 milliseconds) during the remainder of the 10 seconds period. The aggregate duration of control signals will not count quiet periods in between transmissions.

3.4.6 Channel Move Time, Channel Closing Transmission Time and Non-Occupancy Period Test Plots

<80MHz / 5530MHz> In-Service Monitoring

Channel Move Time &

Channel Closing Transmission Time

Non-Occupancy Period

Note:

Dwell (0.4 ms)= Sweep Time (12000 ms) / Sweep Point Bins (30000)

Channel Closing Transmission Time (200 + **0** ms) = 200 + Number (0) X Dwell (0.4 ms) < 260ms

3.4.7 Long Pulsed Radar Type Channel Move Time Test Plots (22second)

<80MHz / 5530MHz> Radar Type 5
Channel Move Time

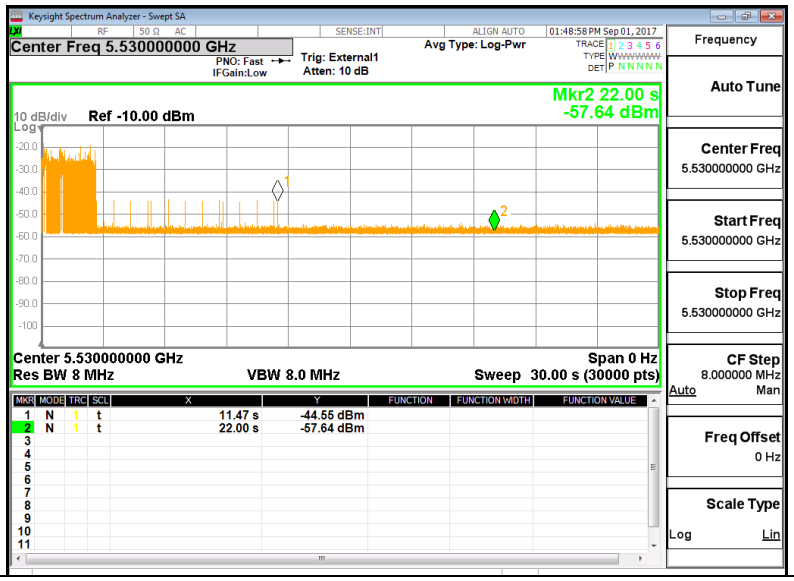

3.4.8 Data Traffic Channel Loading and Noise Floor Plots

EUT data traffic (Master)	Channel Loading > 17% (Master)
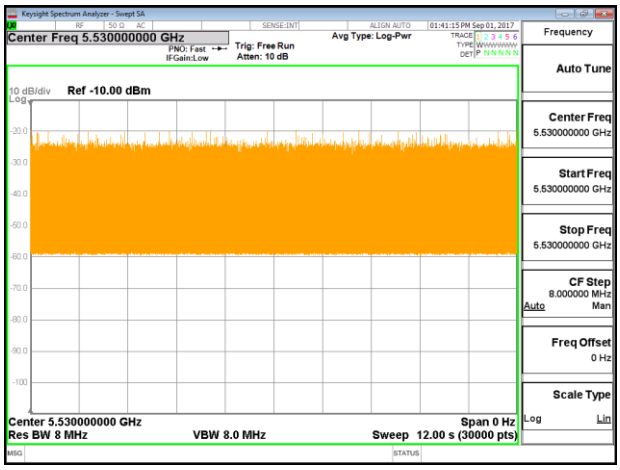	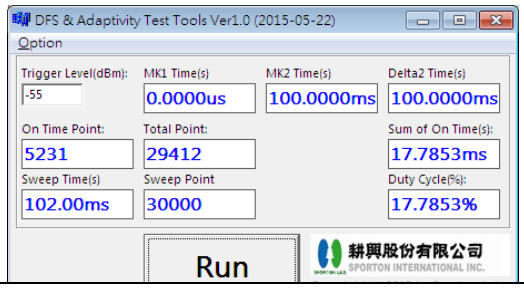

Noise Floor (No transmission)
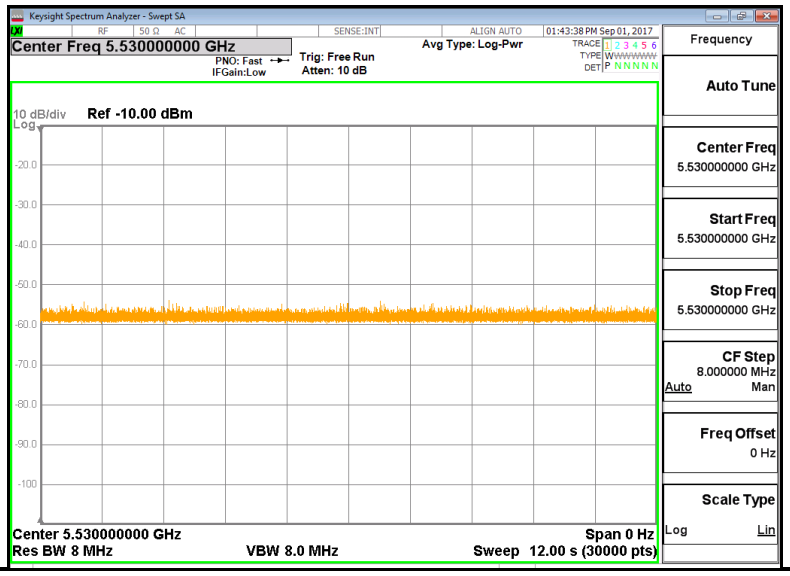

3.5 Statistical Performance Check (7.8.4)

3.5.1 Limit of Statistical Performance Check

Short Pulse Radar Test

Once the performance requirements check is complete, statistical data will be gathered, to determine the ability of the device to detect the radar test waveforms (Short Pulse Radar Types 1-4) found in **Table 5**. The device can utilize a test mode to demonstrate when detection occurs to prevent the need to reset the device between trials. The percentage of successful detection is calculated by:

$$\frac{TotalWaveformDetections}{TotalWaveformTrials} \times 100$$ = Percentage of Successful Detection *Radar Waveform* N = P_dN

In addition an aggregate minimum percentage of successful detection across all Short Pulse Radar Types 1-4 is required and is calculated as follows:

$$\frac{P_d 1 + P_d 2 + P_d 3 + P_d 4}{4}$$

The minimum number of trails, minimum percentage of successful detection and the aggregate minimum percentage of successful detection are found in **Table 5**.

Table 5 – Short Pulse Radar Test Waveforms

Radar Type	Pulse Width (µsec)	PRI (µsec)	Number of Pulses	Minimum Percentage of Successful Detection	Minimum Number of Trials
1	1	1428	18	60%	30
2	1-5	150-230	23-29	60%	30
3	6-10	200-500	16-18	60%	30
4	11-20	200-500	12-16	60%	30
Aggregate (Radar Types 1-4)				80%	120

A minimum of 30 unique waveforms are required for each of the Short Pulse Radar Types 1 through 4. For Short Pulse Radar Type 0, the same waveform is used a minimum of 30 times. If more than 30 waveforms are used for Short Pulse Radar Types 1 through 4, then each additional waveform must also be unique and not repeated from the previous waveforms.

Radar Type	Number of Trials	Number of Successful Detections	Minimum Percentage of Successful Detection
1	35	29	82.9%
2	30	18	60%
3	30	27	90%
4	50	44	88%
Aggregate (82.9% + 60% + 90% + 88%)/4 = 80.2%			

Long Pulse Radar Test

Statistical data will be gathered to determine the ability of the device to detect the Long Pulse Radar Type 5 found in **Table 6**. The device can utilize a test mode to demonstrate when detection occurs to prevent the need to reset the device between trials.

Table 6 – Long Pulse Radar Test Waveform

Radar Type	Pulse Width (µsec)	Chirp Width (MHz)	PRI (µsec)	Number of Pulses per *Burst*	Number of *Bursts*	Minimum Percentage of Successful Detection	Minimum Number of Trials
5	50-100	5-20	1000-2000	1-3	8-20	80%	30

The parameters for this waveform are randomly chosen. Thirty unique waveforms are required for the Long Pulse Radar Type waveforms. If more than 30 waveforms are used for the Long Pulse Radar Type waveforms, then each additional waveform must also be unique and not repeated from the previous waveforms.

Three subsets of trials will be performed with a minimum of ten trials per subset.
The subset of trials differs in where the Long Pulse Type 5 Signal is tuned in frequency:
a) The Channel center frequency (subset case 1).
b) Tuned frequencies such that 90% of the Long Pulse Type 5 frequency modulation is within the low edge of the UUT Occupied Bandwidth (subset case 2).
c) Tuned frequencies such that 90% of the Long Pulse Type 5 frequency modulation is within the high edge of the UUT Occupied Bandwidth (subset case 3).

For subset case 1: the center frequency of the signal generator will remain fixed at the center of the UUT Channel.
For subset case 2: to retain 90% frequency overlap between the radar signal and the UUT Occupied Bandwidth, the center frequency of the signal generator will vary for each of the ten trials in subset case 2.
The center frequency of the signal generator for each trial is calculated by: $FL + (0.4 * Chirp\ Width\ [in\ MHz])$
For subset case 3: to retain 90% frequency overlap between the radar signal and the UUT Occupied Bandwidth, the center frequency of the signal generator will vary for each of the ten trials in subset case 3.
The center frequency of the signal generator for each trial is calculated by: $FH - (0.4 * Chirp\ Width\ [in\ MHz])$

a) Channel center frequency (subset case 1)

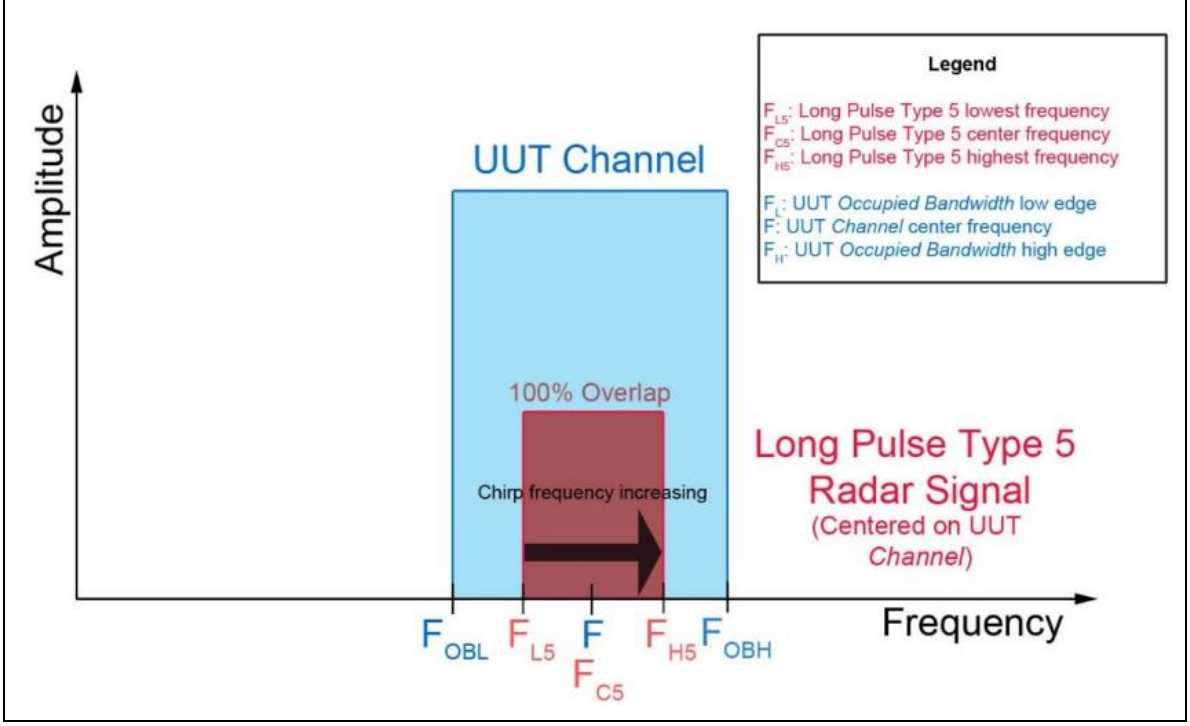

b) Tuned frequencies such that 90% of the Long Pulse Type 5 frequency modulation is within the low edge of the UUT Occupied Bandwidth. (subset case 2)

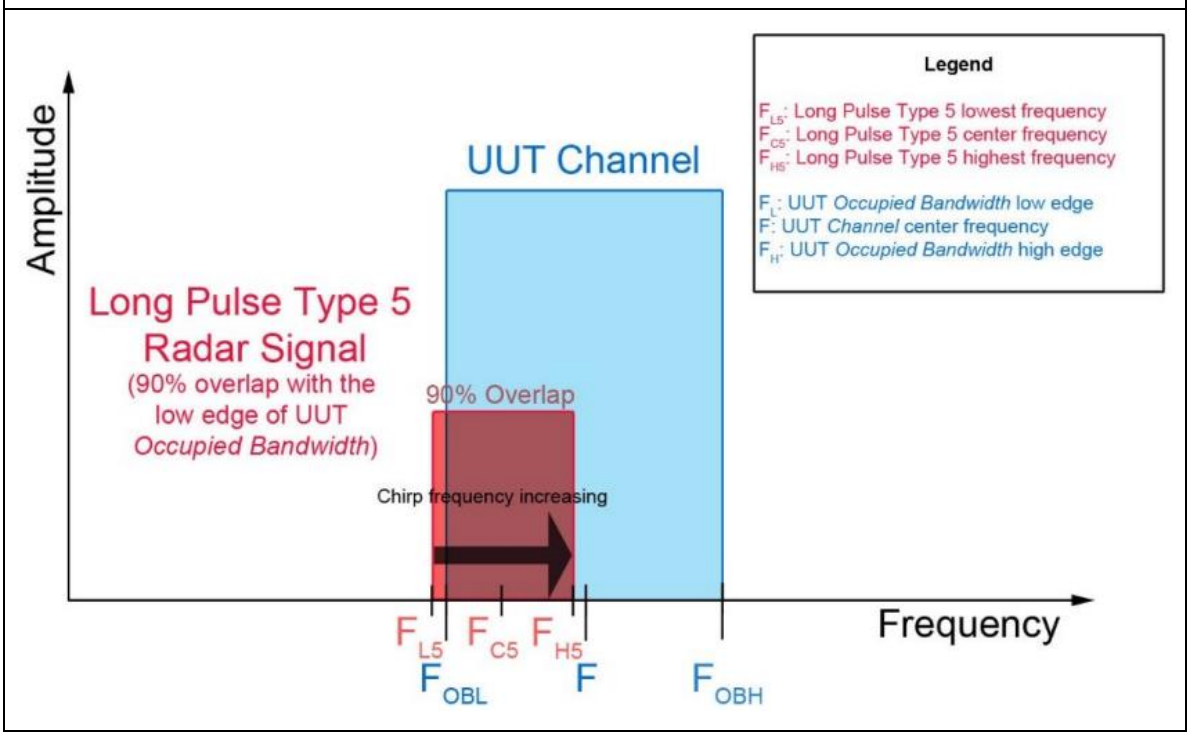

c) Tuned frequencies such that 90% of the Long Pulse Type 5 frequency modulation is within the high edge of the UUT Occupied Bandwidth. (subset case 3)

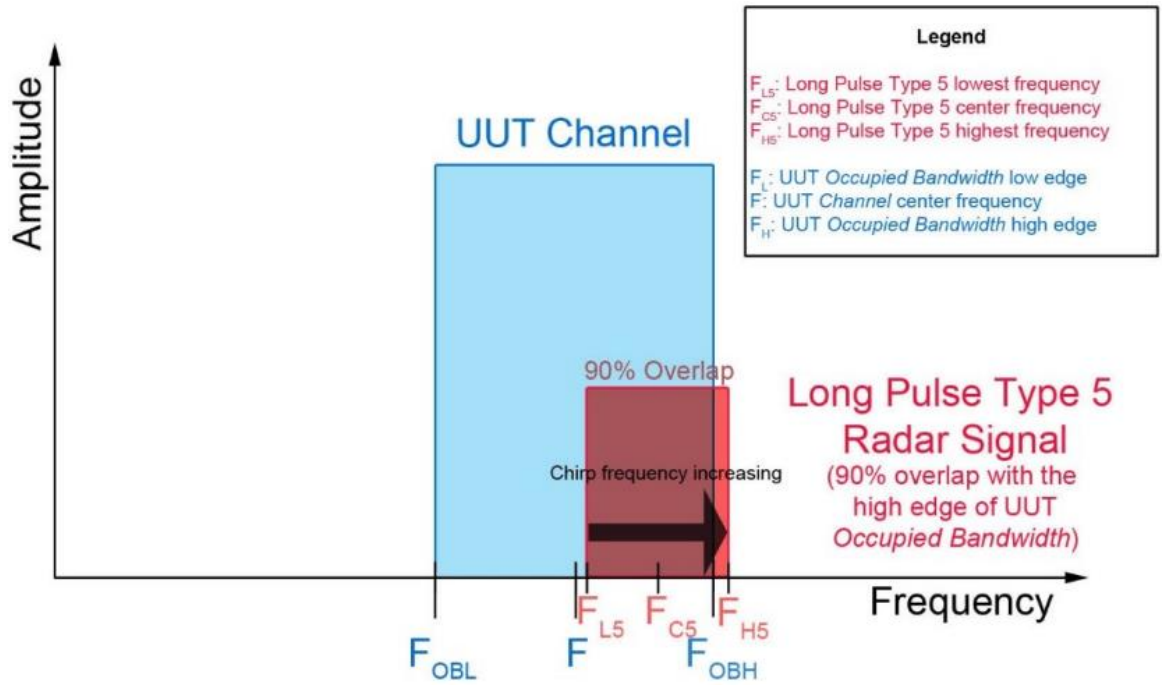

The percentage of successful detection is calculated by:

$$\frac{TotalWaveformDetections}{TotalWaveformTrials} \times 100$$

Frequency Hopping Radar Test

Statistical data will be gathered to determine the ability of the device to detect the Frequency Hopping radar test signal (radar type 6) found in **Table 7**. The device can utilize a test mode to demonstrate when detection occurs to prevent the need to reset the device between trial runs. The probability of successful detection is calculated by:

$$\frac{TotalWaveformDetections}{TotalWaveformTrials} \times 100$$

Table 7 – Frequency Hopping Radar Test Waveform

Radar Type	Pulse Width (µsec)	PRI (µsec)	Pulses per Hop	Hopping Rate (kHz)	Hopping Sequence Length (msec)	Minimum Percentage of Successful Detection	Minimum Number of Trials
6	1	333	9	0.333	300	70%	30

For the Frequency Hopping Radar Type, the same *Burst* parameters are used for each waveform. The hopping sequence is different for each waveform and a 100-length segment is selected from the hopping sequence defined by the following algorithm:

The first frequency in a hopping sequence is selected randomly from the group of 475 integer frequencies from 5250 – 5724 MHz. Next, the frequency that was just chosen is removed from the group and a frequency is randomly selected from the remaining 474 frequencies in the group. This process continues until all 475 frequencies are chosen for the set. For selection of a random frequency, the frequencies remaining within the group are always treated as equally likely.

3.5.2 Test Procedures

(1) One frequency will be chosen from the Operating Channels of the EUT within the 5250-5350 MHz or 5470-5725 MHz bands.
(2) In case the EUT is a Master Device, a U-NII device operating as a Client Device will be used and it is assumed that the Client will associate with the EUT (Master). If the Master Device has antenna gain, the main beam of the antenna will be directed toward the radar emitter. Vertical polarization is used for testing.
(3) The TCP protocol unicast data stream was generated by the iperf software command line with at least 17% activity ratio over any 100ms period.
(4) At time T0 the Radar Waveform generator sends a Burst of pulses for each of the Radar Types 1-6 at DFS Detection Threshold levels on the Operating Channel. An additional 1 dB is added to the radar test signal to ensure it is at or above the DFS Detection Threshold, accounting for equipment variations/errors.
(5) Observe the transmissions of the EUT at the end of the Burst on the Operating Channel for duration greater than 10 seconds for Short Pulse Radar Types 1-4 and 6 to ensure detection occurs.
(6) Observe the transmissions of the EUT at the end of the Burst on the Operating Channel for duration greater than 22 seconds for Long Pulse Radar Type 5 to ensure detection occurs.

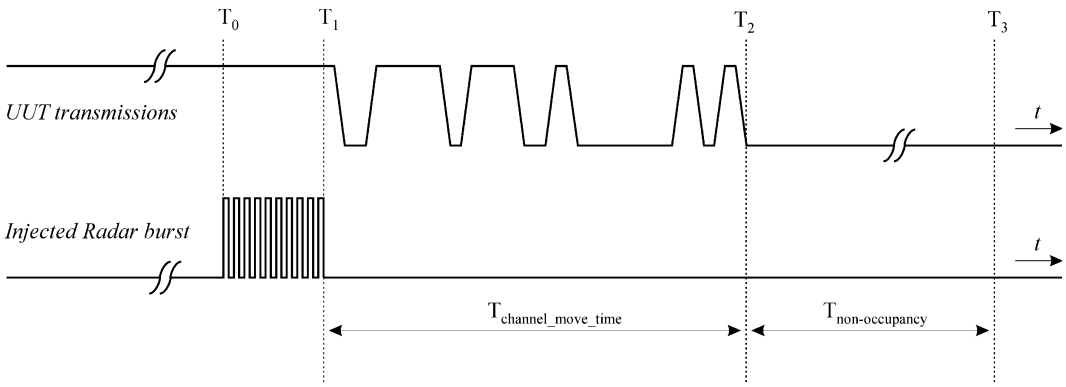

3.5.3 Test Setup

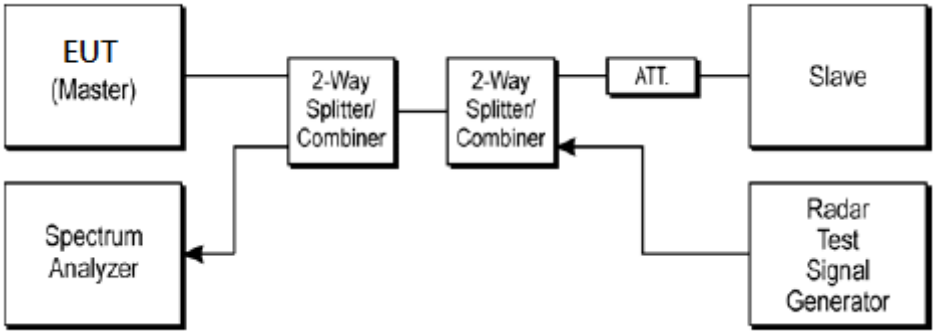

3.5.4 Test Deviation

There is no deviation with the original standard.

3.5.5 Result of Statistical Performance Check

<10MHz / 5530MHz>

(Detection = Y, No Detection = N)						
Trial Number	**Type 1**	**Type 2**	**Type 3**	**Type 4**	**Type 5**	**Type 6**
1	**Y**	**Y**	**Y**	**Y**	**Y**	**Y**
2	**Y**	**Y**	**Y**	**Y**	**Y**	**Y**
3	**Y**	**Y**	**Y**	**Y**	**Y**	**Y**
4	**Y**	**Y**	**Y**	**Y**	**Y**	**Y**
5	**Y**	**Y**	**Y**	**Y**	**Y**	**Y**
6	**Y**	**Y**	**Y**	**Y**	**Y**	**Y**
7	**Y**	**Y**	**Y**	**Y**	**Y**	**Y**
8	**Y**	**Y**	**Y**	**Y**	**Y**	**Y**
9	**Y**	**Y**	**Y**	**Y**	**Y**	**Y**
10	**Y**	**Y**	**Y**	**Y**	**Y**	**Y**
11	**Y**	**Y**	**Y**	**Y**	**Y**	**Y**
12	**Y**	**Y**	**Y**	**Y**	**Y**	**Y**
13	**Y**	**Y**	**Y**	**Y**	**Y**	**Y**
14	**Y**	**Y**	**Y**	**Y**	**Y**	**Y**
15	**Y**	**Y**	**Y**	**Y**	**Y**	**Y**
16	**Y**	**Y**	**Y**	**Y**	**Y**	**Y**
17	**Y**	**Y**	**Y**	**Y**	**Y**	**Y**
18	**Y**	**Y**	**Y**	**Y**	**Y**	**Y**
19	**Y**	**Y**	**Y**	**Y**	**Y**	**Y**
20	**Y**	**Y**	**Y**	**Y**	**Y**	**Y**
21	**Y**	**Y**	**Y**	**Y**	**Y**	**Y**
22	**Y**	**Y**	**Y**	**Y**	**Y**	**Y**
23	**Y**	**Y**	**Y**	**Y**	**Y**	**Y**
24	**Y**	**Y**	**Y**	**Y**	**Y**	**Y**
25	**Y**	**Y**	**Y**	**Y**	**Y**	**Y**
26	**Y**	**Y**	**Y**	**Y**	**Y**	**Y**
27	**Y**	**Y**	**Y**	**Y**	**Y**	**Y**
28	**Y**	**Y**	**Y**	**Y**	**Y**	**Y**
29	**Y**	**Y**	**Y**	**Y**	**Y**	**Y**
30	**Y**	**Y**	**Y**	**Y**	**Y**	**Y**
Trial of Detection	**30/30**	**30/30**	**30/30**	**30/30**	**30/30**	**30/30**
Probability (%)	**100%**	**100%**	**100%**	**100%**	**100%**	**100%**
Limit (%)	>= 60%	>= 60%	>= 60%	>= 60%	>= 80%	>= 70%
Average Probability of Radar Type 1~4 (%)			**100%** (>=80%)			

<20MHz / 5530MHz>

(Detection = Y, No Detection = N)						
Trial Number	**Type 1**	**Type 2**	**Type 3**	**Type 4**	**Type 5**	**Type 6**
1	Y	Y	Y	Y	Y	Y
2	Y	Y	Y	Y	Y	Y
3	Y	Y	Y	Y	Y	Y
4	Y	Y	Y	Y	Y	Y
5	Y	Y	Y	Y	Y	Y
6	Y	Y	Y	Y	Y	Y
7	Y	Y	Y	Y	Y	Y
8	Y	Y	Y	Y	Y	Y
9	Y	Y	Y	Y	Y	Y
10	Y	Y	Y	Y	Y	Y
11	Y	Y	Y	Y	Y	Y
12	Y	Y	Y	Y	Y	Y
13	Y	Y	Y	Y	Y	Y
14	Y	Y	Y	Y	Y	Y
15	Y	Y	Y	Y	Y	Y
16	Y	Y	Y	Y	Y	Y
17	Y	Y	Y	Y	Y	Y
18	Y	Y	Y	Y	Y	Y
19	Y	Y	Y	Y	Y	Y
20	Y	Y	Y	Y	Y	Y
21	Y	Y	Y	Y	Y	Y
22	Y	Y	Y	Y	Y	Y
23	Y	Y	Y	Y	Y	Y
24	Y	Y	Y	Y	Y	Y
25	Y	Y	Y	Y	Y	Y
26	Y	Y	Y	Y	Y	Y
27	Y	Y	Y	Y	Y	Y
28	Y	Y	Y	Y	Y	Y
29	Y	Y	Y	Y	Y	Y
30	Y	Y	Y	Y	Y	Y
Trial of Detection	**30/30**	**30/30**	**30/30**	**30/30**	**30/30**	**30/30**
Probability (%)	**100%**	**100%**	**100%**	**100%**	**100%**	**100%**
Limit (%)	>= 60%	>= 60%	>= 60%	>= 60%	>= 80%	>= 70%
Average Probability of Radar Type 1~4 (%)			**100%** (>=80%)			

<30MHz / 5530MHz>

(Detection = Y, No Detection = N)						
Trial Number	**Type 1**	**Type 2**	**Type 3**	**Type 4**	**Type 5**	**Type 6**
1	**Y**	**Y**	**Y**	**Y**	**Y**	**Y**
2	**Y**	**Y**	**Y**	**Y**	**Y**	**Y**
3	**Y**	**Y**	**Y**	**Y**	**Y**	**Y**
4	**Y**	**Y**	**Y**	**Y**	**Y**	**Y**
5	**Y**	**Y**	**Y**	**Y**	**Y**	**Y**
6	**Y**	**Y**	**Y**	**Y**	**Y**	**Y**
7	**Y**	**Y**	**Y**	**Y**	**Y**	**Y**
8	**Y**	**Y**	**Y**	**Y**	**Y**	**Y**
9	**Y**	**Y**	**Y**	**Y**	**Y**	**Y**
10	**Y**	**Y**	**Y**	**Y**	**Y**	**Y**
11	**Y**	**Y**	**Y**	**Y**	**Y**	**Y**
12	**Y**	**Y**	**Y**	**Y**	**Y**	**Y**
13	**Y**	**Y**	**Y**	**Y**	**Y**	**Y**
14	**Y**	**Y**	**Y**	**Y**	**Y**	**Y**
15	**Y**	**Y**	**Y**	**Y**	**Y**	**Y**
16	**Y**	**Y**	**Y**	**Y**	**Y**	**Y**
17	**Y**	**Y**	**Y**	**Y**	**Y**	**Y**
18	**Y**	**Y**	**Y**	**Y**	**Y**	**Y**
19	**Y**	**Y**	**Y**	**Y**	**Y**	**Y**
20	**Y**	**Y**	**Y**	**Y**	**Y**	**Y**
21	**Y**	**Y**	**Y**	**Y**	**Y**	**Y**
22	**Y**	**Y**	**Y**	**Y**	**Y**	**Y**
23	**Y**	**Y**	**Y**	**Y**	**Y**	**Y**
24	**Y**	**Y**	**Y**	**Y**	**Y**	**Y**
25	**Y**	**Y**	**Y**	**Y**	**Y**	**Y**
26	**Y**	**Y**	**Y**	**Y**	**Y**	**Y**
27	**Y**	**Y**	**Y**	**Y**	**Y**	**Y**
28	**Y**	**Y**	**Y**	**Y**	**Y**	**Y**
29	**Y**	**Y**	**Y**	**Y**	**Y**	**Y**
30	**Y**	**Y**	**Y**	**Y**	**Y**	**Y**
Trial of Detection	**30/30**	**30/30**	**30/30**	**30/30**	**30/30**	**30/30**
Probability (%)	**100%**	**100%**	**100%**	**100%**	**100%**	**100%**
Limit (%)	>= 60%	>= 60%	>= 60%	>= 60%	>= 80%	>= 70%
Average Probability of Radar Type 1~4 (%)			**100%** (>=80%)			

<40MHz / 5530MHz>

(Detection = Y, No Detection = N)						
Trial Number	**Type 1**	**Type 2**	**Type 3**	**Type 4**	**Type 5**	**Type 6**
1	**Y**	**Y**	**Y**	**Y**	**Y**	**Y**
2	**Y**	**Y**	**Y**	**Y**	**Y**	**Y**
3	**Y**	**Y**	**Y**	**Y**	**Y**	**Y**
4	**Y**	**Y**	**Y**	**Y**	**Y**	**Y**
5	**Y**	**Y**	**Y**	**Y**	**Y**	**Y**
6	**Y**	**Y**	**Y**	**Y**	**Y**	**Y**
7	**Y**	**Y**	**Y**	**Y**	**Y**	**Y**
8	**Y**	**Y**	**Y**	**Y**	**Y**	**Y**
9	**Y**	**Y**	**Y**	**Y**	**Y**	**Y**
10	**Y**	**Y**	**Y**	**Y**	**Y**	**Y**
11	**Y**	**Y**	**Y**	**Y**	**Y**	**Y**
12	**Y**	**Y**	**Y**	**Y**	**Y**	**Y**
13	**Y**	**Y**	**Y**	**Y**	**Y**	**Y**
14	**Y**	**Y**	**Y**	**Y**	**Y**	**Y**
15	**Y**	**Y**	**Y**	**Y**	**Y**	**Y**
16	**Y**	**Y**	**Y**	**Y**	**Y**	**Y**
17	**Y**	**Y**	**Y**	**Y**	**Y**	**Y**
18	**Y**	**Y**	**Y**	**Y**	**Y**	**Y**
19	**Y**	**Y**	**Y**	**Y**	**Y**	**Y**
20	**Y**	**Y**	**Y**	**Y**	**Y**	**Y**
21	**Y**	**Y**	**Y**	**Y**	**Y**	**Y**
22	**Y**	**Y**	**Y**	**Y**	**Y**	**Y**
23	**Y**	**Y**	**Y**	**Y**	**Y**	**Y**
24	**Y**	**Y**	**Y**	**Y**	**Y**	**Y**
25	**Y**	**Y**	**Y**	**Y**	**Y**	**Y**
26	**Y**	**Y**	**Y**	**Y**	**Y**	**Y**
27	**Y**	**Y**	**Y**	**Y**	**Y**	**Y**
28	**Y**	**Y**	**Y**	**Y**	**Y**	**Y**
29	**Y**	**Y**	**Y**	**Y**	**Y**	**Y**
30	**Y**	**Y**	**Y**	**Y**	**Y**	**Y**
Trial of Detection	**30/30**	**30/30**	**30/30**	**30/30**	**30/30**	**30/30**
Probability (%)	**100%**	**100%**	**100%**	**100%**	**100%**	**100%**
Limit (%)	>= 60%	>= 60%	>= 60%	>= 60%	>= 80%	>= 70%
Average Probability of Radar Type 1~4 (%)			**100%** (>=80%)			

<50MHz / 5530MHz>

(Detection = Y, No Detection = N)						
Trial Number	**Type 1**	**Type 2**	**Type 3**	**Type 4**	**Type 5**	**Type 6**
1	**Y**	**Y**	**Y**	**Y**	**Y**	**Y**
2	**Y**	**Y**	**Y**	**Y**	**Y**	**Y**
3	**Y**	**Y**	**Y**	**Y**	**Y**	**Y**
4	**Y**	**Y**	**Y**	**Y**	**Y**	**Y**
5	**Y**	**Y**	**Y**	**Y**	**Y**	**Y**
6	**Y**	**Y**	**Y**	**Y**	**Y**	**Y**
7	**Y**	**Y**	**Y**	**Y**	**Y**	**Y**
8	**Y**	**Y**	**Y**	**Y**	**Y**	**Y**
9	**Y**	**Y**	**Y**	**Y**	**Y**	**Y**
10	**Y**	**Y**	**Y**	**Y**	**Y**	**Y**
11	**Y**	**Y**	**Y**	**Y**	**Y**	**Y**
12	**Y**	**Y**	**Y**	**Y**	**Y**	**Y**
13	**Y**	**Y**	**Y**	**Y**	**Y**	**Y**
14	**Y**	**Y**	**Y**	**Y**	**Y**	**Y**
15	**Y**	**Y**	**Y**	**Y**	**Y**	**Y**
16	**Y**	**Y**	**Y**	**Y**	**Y**	**Y**
17	**Y**	**Y**	**Y**	**Y**	**Y**	**Y**
18	**Y**	**Y**	**Y**	**Y**	**Y**	**Y**
19	**Y**	**Y**	**Y**	**Y**	**Y**	**Y**
20	**Y**	**Y**	**Y**	**Y**	**Y**	**Y**
21	**Y**	**Y**	**Y**	**Y**	**Y**	**Y**
22	**Y**	**Y**	**Y**	**Y**	**Y**	**Y**
23	**Y**	**Y**	**Y**	**Y**	**Y**	**Y**
24	**Y**	**Y**	**Y**	**Y**	**Y**	**Y**
25	**Y**	**Y**	**Y**	**Y**	**Y**	**Y**
26	**Y**	**Y**	**Y**	**Y**	**Y**	**Y**
27	**Y**	**Y**	**Y**	**Y**	**Y**	**Y**
28	**Y**	**Y**	**Y**	**Y**	**Y**	**Y**
29	**Y**	**Y**	**Y**	**Y**	**Y**	**Y**
30	**Y**	**Y**	**Y**	**Y**	**Y**	**Y**
Trial of Detection	**30/30**	**30/30**	**30/30**	**3030**	**30/30**	**30/30**
Probability (%)	**100%**	**100%**	**100%**	**100%**	**100%**	**100%**
Limit (%)	>= 60%	>= 60%	>= 60%	>= 60%	>= 80%	>= 70%
Average Probability of Radar Type 1~4 (%)			**100%** (>=80%)			

<60MHz / 5530MHz>

(Detection = Y, No Detection = N)						
Trial Number	**Type 1**	**Type 2**	**Type 3**	**Type 4**	**Type 5**	**Type 6**
1	**Y**	**Y**	**Y**	**Y**	**Y**	**Y**
2	**Y**	**Y**	**Y**	**Y**	**Y**	**Y**
3	**Y**	**Y**	**Y**	**Y**	**Y**	**Y**
4	**Y**	**Y**	**Y**	**Y**	**Y**	**Y**
5	**Y**	**Y**	**Y**	**Y**	**Y**	**Y**
6	**Y**	**Y**	**Y**	**Y**	**Y**	**Y**
7	**Y**	**Y**	**Y**	**Y**	**Y**	**Y**
8	**Y**	**Y**	**Y**	**Y**	**Y**	**Y**
9	**Y**	**Y**	**Y**	**Y**	**Y**	**Y**
10	**Y**	**Y**	**Y**	**Y**	**Y**	**Y**
11	**Y**	**Y**	**Y**	**Y**	**Y**	**Y**
12	**Y**	**Y**	**Y**	**Y**	**Y**	**Y**
13	**Y**	**Y**	**Y**	**Y**	**Y**	**Y**
14	**Y**	**Y**	**Y**	**Y**	**Y**	**Y**
15	**Y**	**Y**	**Y**	**Y**	**Y**	**Y**
16	**Y**	**Y**	**Y**	**Y**	**Y**	**Y**
17	**Y**	**Y**	**Y**	**Y**	**Y**	**Y**
18	**Y**	**Y**	**Y**	**Y**	**Y**	**Y**
19	**Y**	**Y**	**Y**	**Y**	**Y**	**Y**
20	**Y**	**Y**	**Y**	**Y**	**Y**	**Y**
21	**Y**	**Y**	**Y**	**Y**	**Y**	**Y**
22	**Y**	**Y**	**Y**	**Y**	**Y**	**Y**
23	**Y**	**Y**	**Y**	**Y**	**Y**	**Y**
24	**Y**	**Y**	**Y**	**Y**	**Y**	**Y**
25	**Y**	**Y**	**Y**	**Y**	**Y**	**Y**
26	**Y**	**Y**	**Y**	**Y**	**Y**	**Y**
27	**Y**	**Y**	**Y**	**Y**	**Y**	**Y**
28	**Y**	**Y**	**Y**	**Y**	**Y**	**Y**
29	**Y**	**Y**	**Y**	**Y**	**Y**	**Y**
30	**Y**	**Y**	**Y**	**Y**	**Y**	**Y**
Trial of Detection	**30/30**	**30/30**	**30/30**	**30/30**	**30/30**	**30/30**
Probability (%)	**100%**	**100%**	**100%**	**100%**	**100%**	**100%**
Limit (%)	>= 60%	>= 60%	>= 60%	>= 60%	>= 80%	>= 70%
Average Probability of Radar Type 1~4 (%)			**100%** (>=80%)			

<80MHz / 5530MHz>

(Detection = Y, No Detection = N)						
Trial Number	**Type 1**	**Type 2**	**Type 3**	**Type 4**	**Type 5**	**Type 6**
1	**Y**	**Y**	**Y**	**Y**	**Y**	**Y**
2	**Y**	**Y**	**Y**	**Y**	**Y**	**Y**
3	**Y**	**Y**	**Y**	**Y**	**Y**	**Y**
4	**Y**	**Y**	**Y**	**Y**	**Y**	**Y**
5	**Y**	**Y**	**Y**	**Y**	**Y**	**Y**
6	**Y**	**Y**	**Y**	**Y**	**Y**	**Y**
7	**Y**	**Y**	**Y**	**Y**	**Y**	**Y**
8	**Y**	**Y**	**Y**	**Y**	**Y**	**Y**
9	**Y**	**Y**	**Y**	**Y**	**Y**	**Y**
10	**Y**	**Y**	**Y**	**Y**	**Y**	**Y**
11	**Y**	**Y**	**Y**	**Y**	**Y**	**Y**
12	**Y**	**Y**	**Y**	**Y**	**Y**	**Y**
13	**Y**	**Y**	**Y**	**Y**	**Y**	**Y**
14	**Y**	**Y**	**Y**	**Y**	**Y**	**Y**
15	**Y**	**Y**	**Y**	**Y**	**Y**	**Y**
16	**Y**	**Y**	**Y**	**Y**	**Y**	**Y**
17	**Y**	**Y**	**Y**	**Y**	**Y**	**Y**
18	**Y**	**Y**	**Y**	**Y**	**Y**	**Y**
19	**Y**	**Y**	**Y**	**Y**	**Y**	**Y**
20	**Y**	**Y**	**Y**	**Y**	**Y**	**Y**
21	**Y**	**Y**	**Y**	**Y**	**Y**	**Y**
22	**Y**	**Y**	**Y**	**Y**	**Y**	**Y**
23	**Y**	**Y**	**Y**	**Y**	**Y**	**Y**
24	**Y**	**Y**	**Y**	**Y**	**Y**	**Y**
25	**Y**	**Y**	**Y**	**Y**	**Y**	**Y**
26	**Y**	**Y**	**Y**	**Y**	**Y**	**Y**
27	**Y**	**Y**	**Y**	**Y**	**Y**	**Y**
28	**Y**	**Y**	**Y**	**Y**	**Y**	**Y**
29	**Y**	**Y**	**Y**	**Y**	**Y**	**Y**
30	**Y**	**Y**	**Y**	**Y**	**Y**	**Y**
Trial of Detection	**30/30**	**30/30**	**30/30**	**30/30**	**30/30**	**30/30**
Probability (%)	**100%**	**100%**	**100%**	**100%**	**100%**	**100%**
Limit (%)	>= 60%	>= 60%	>= 60%	>= 60%	>= 80%	>= 70%
Average Probability of Radar Type 1~4 (%)			**100%** (>=80%)			

4 List of Measuring Equipment

Instrument	Manufacturer	Model No.	Serial No.	Characteristics	Calibration Date	Test Date	Due Date	Remark
Spectrum Analyzer	Agilent	N9010A	MY56070412	10Hz~7GHz	Aug. 08, 2017	Sep. 01, 2017~ Sep. 08, 2017	Aug. 07, 2018	DFS (DFS02-HY)
Signal Generator	Agilent	E4438C	MY49070755	250KHz ~ 6GHz	Sep. 30, 2016	Sep. 01, 2017~ Sep. 08, 2017	Sep. 29, 2017	DFS (DFS02-HY)
Power Divider	MTJ	2Way SMA Power Divider	MD10003	0.5G~6GHz	Calibration from System	Sep. 01, 2017~ Sep. 08, 2017	Calibration from System	DFS (DFS02-HY)
Power Divider	MTJ	2Way SMA Power Divider	MD10007	0.5G~6GHz	Calibration from System	Sep. 01, 2017~ Sep. 08, 2017	Calibration from System	DFS (DFS02-HY)
Power Divider	Woken	4Way SMA Power Divider	0120A02056002D	0.5G~6GHz	Calibration from System	Sep. 01, 2017~ Sep. 08, 2017	Calibration from System	DFS (DFS02-HY)

Channel 106 Bandwidth 10MHz

Report Number : FZ561115-04A

DFS Radar Parameters
FCC Radar Type 1
Channel 106 Bandwidth 10MHz

Trial #	Pulse Repetition Frequency Number (1 to 23)	Pulse Repetition Frequency (Pulses Per Second)	Pulse Repetition Interval (Microseconds)	Detection (Yes / No)
1	3	1792.11	558	Y
2	12	326.16	3066	Y
3	21	1089.32	918	Y
4	13	1319.26	758	Y
5	10	1432.66	698	Y
6	14	1285.35	778	Y
7	4	1730.10	578	Y
8	7	1567.40	638	Y
9	20	1113.59	898	Y
10	6	1618.12	618	Y
11	5	1672.24	598	Y
12	18	1165.50	858	Y
13	17	1193.32	838	Y
14	1	1930.50	518	Y
15	15	1253.13	798	Y
16		364.56	2743	Y
17		1267.43	789	Y
18		396.67	2521	Y
19		611.62	1635	Y
20		827.13	1209	Y
21		545.85	1832	Y
22		603.14	1658	Y
23		598.80	1670	Y
24		617.67	1619	Y
25		1785.71	560	Y
26		505.82	1977	Y
27		677.05	1477	Y
28		734.75	1361	Y
29		416.49	2401	Y
30		462.96	2160	Y

DFS Radar Parameters
FCC Radar Type 2
Channel 106 Bandwidth 10MHz

Trial #	Number Pulses per Burst	Pulse Width (Microseconds)	Pulse Repetition Interval (Microseconds)	Detection (Yes / No)
1	28	4.40	162	Y
2	28	4.00	187	Y
3	24	1.70	205	Y
4	25	2.60	178	Y
5	23	1.40	218	Y
6	28	4.40	221	Y
7	23	1.30	166	Y
8	28	4.30	159	Y
9	23	1.40	201	Y
10	29	4.90	152	Y
11	24	2.00	195	Y
12	24	1.70	211	Y
13	26	2.90	151	Y
14	23	1.30	207	Y
15	23	1.50	161	Y
16	28	4.20	223	Y
17	26	3.00	180	Y
18	28	3.90	158	Y
19	28	4.10	208	Y
20	27	3.50	198	Y
21	26	3.20	214	Y
22	29	4.80	156	Y
23	25	2.20	202	Y
24	28	4.00	228	Y
25	27	3.80	150	Y
26	27	3.40	190	Y
27	23	1.50	200	Y
28	24	1.80	210	Y
29	24	1.70	197	Y
30	29	5.00	193	Y

DFS Radar Parameters
FCC Radar Type 3
Channel 106 Bandwidth 10MHz

Trial #	Number Pulses per Burst	Pulse Width (Microseconds)	Pulse Repetition Interval (Microseconds)	Detection (Yes / No)
1	18	9.40	250	Y
2	18	9.00	262	Y
3	16	6.70	282	Y
4	17	7.60	419	Y
5	16	6.40	469	Y
6	18	9.40	209	Y
7	16	6.30	268	Y
8	18	9.30	378	Y
9	16	6.40	230	Y
10	18	9.90	257	Y
11	16	7.00	479	Y
12	16	6.70	286	Y
13	17	7.90	433	Y
14	16	6.30	244	Y
15	16	6.50	204	Y
16	18	9.20	369	Y
17	17	8.00	271	Y
18	18	8.90	458	Y
19	18	9.10	267	Y
20	17	8.50	461	Y
21	17	8.20	355	Y
22	18	9.80	329	Y
23	16	7.20	444	Y
24	18	9.00	394	Y
25	18	8.80	440	Y
26	17	8.40	462	Y
27	16	6.50	281	Y
28	16	6.80	298	Y
29	16	6.70	482	Y
30	18	10.00	345	Y

DFS Radar Parameters
FCC Radar Type 4
Channel 106 Bandwidth 10MHz

Trial #	Number Pulses per Burst	Pulse Width (Microseconds)	Pulse Repetition Interval (Microseconds)	Detection (Yes / No)
1	16	18.50	250	Y
2	15	17.80	262	Y
3	12	12.70	282	Y
4	14	14.70	419	Y
5	12	11.80	469	Y
6	16	18.50	209	Y
7	12	11.70	268	Y
8	16	18.40	378	Y
9	12	11.90	230	Y
10	16	19.70	257	Y
11	13	13.30	479	Y
12	12	12.60	286	Y
13	14	15.20	433	Y
14	12	11.80	244	Y
15	12	12.10	204	Y
16	16	18.20	369	Y
17	14	15.60	271	Y
18	15	17.50	458	Y
19	15	17.90	267	Y
20	15	16.60	461	Y
21	14	16.00	355	Y
22	16	19.40	329	Y
23	13	13.70	444	Y
24	15	17.70	394	Y
25	15	17.20	440	Y
26	14	16.30	462	Y
27	12	12.20	281	Y
28	12	12.70	298	Y
29	12	12.60	482	Y
30	16	19.80	345	Y

DFS Radar Parameters
FCC Radar Type 5
Channel 106 Bandwidth 10MHz

Trial Number:			1			Detection (Yes/No)
Number of Bursts in Trial:			18			
Chirp Center Frequency:			5530			Yes
Burst	Number of Pulses	Pulse Width (Microseconds)	Chirp Width (MHz)	Pulse 1-to-2 Spacing (µsec)	Pulse 2-to-3 Spacing (µsec)	Starting Location Within Interval (µsec)
1	3	91.7	18	1598	1174	50049
2	3	87.6	18	1731	1799	210603
3	1	59.6	18	-	1250	373075
4	2	70.6	18	1972	1378	532773
5	1	54.9	18	-	1143	30432
6	3	91.7	18	1295	1603	190978
7	1	54.2	18	-	1793	352908
8	3	90.9	18	1146	1318	512779
9	1	55.3	18	-	1513	10544
10	3	98.2	18	1765	1848	170951
11	1	62.8	18	-	1349	333267
12	1	59	18	-	1393	494595
13	2	73.6	18	1438	1892	654035
14	1	54.5	18	-	1208	152063
15	1	56.2	18	-	1232	313447
16	3	90.1	18	1780	1687	471928
17	2	75.4	18	1086	1055	635355
18	3	85.8	18	1717	1161	131596
19						
20						

Trial Number:			2			Detection (Yes/No)
Number of Bursts in Trial:			17			
Chirp Center Frequency:			5530			Yes
Burst	Number of Pulses	Pulse Width (Microseconds)	Chirp Width (MHz)	Pulse 1-to-2 Spacing (µsec)	Pulse 2-to-3 Spacing (µsec)	Starting Location Within Interval (µsec)
1	3	88.5	17	1292	1124	309787
2	2	81.1	17	1965	1254	480409
3	2	77.7	17	1944	1527	650594
4	3	96.7	17	1176	1394	118400
5	1	65.3	17	-	1760	289600
6	3	86.9	17	1993	1707	458057
7	3	84.2	17	1107	1316	629583
8	2	79.5	17	1229	1205	97699
9	1	56.9	17	-	1614	268620
10	1	59.8	17	-	1776	439327
11	1	58.8	17	-	1907	609981
12	3	98.9	17	1385	1818	76481
13	2	75.7	17	1578	1770	246971
14	2	70.3	17	1329	1081	417915
15	3	92.5	17	1022	1031	587301
16	2	69	17	1556	1305	55635
17	2	68.8	17	1183	1752	226116
18						
19						
20						

DFS Radar Parameters
FCC Radar Type 5
Channel 106 Bandwidth 10MHz

Trial Number:			3			Detection (Yes/No)
Number of Bursts in Trial:			10			
Chirp Center Frequency:			5530			Yes
Burst	Number of Pulses	Pulse Width (Microseconds)	Chirp Width (MHz)	Pulse 1-to-2 Spacing (µsec)	Pulse 2-to-3 Spacing (µsec)	Starting Location Within Interval (µsec)
1	1	52.8	8	-	1386	676257
2	2	71.8	8	1950	1119	965601
3	1	51.5	8	-	1044	59063
4	2	75.9	8	1967	1309	349197
5	3	83.7	8	1133	1273	639336
6	2	81.3	8	1909	1741	929393
7	1	54.5	8	-	1307	23240
8	3	94.4	8	1148	1335	313147
9	2	77.7	8	1640	1434	603790
10	2	78.7	8	1580	1703	893927
11						
12						
13						
14						
15						
16						
17						
18						
19						
20						

Trial Number:			4			Detection (Yes/No)
Number of Bursts in Trial:			13			
Chirp Center Frequency:			5530			Yes
Burst	Number of Pulses	Pulse Width (Microseconds)	Chirp Width (MHz)	Pulse 1-to-2 Spacing (µsec)	Pulse 2-to-3 Spacing (µsec)	Starting Location Within Interval (µsec)
1	1	55	11	-	1439	911974
2	1	55.1	11	-	1427	213865
3	2	68.9	11	1863	1069	436679
4	1	55.1	11	-	1100	661157
5	2	70.7	11	1738	1691	882531
6	2	70.3	11	1941	1135	185997
7	1	52.7	11	-	1819	409686
8	2	79.7	11	1694	1926	631882
9	3	96.4	11	1281	1339	854349
10	3	86.7	11	1851	1510	158145
11	3	95	11	1277	1505	381337
12	2	72.3	11	1027	1924	604854
13	2	72.7	11	1127	1951	827899
14						
15						
16						
17						
18						
19						
20						

DFS Radar Parameters
FCC Radar Type 5
Channel 106 Bandwidth 10MHz

Trial Number:			5			Detection (Yes/No)
Number of Bursts in Trial:			9			
Chirp Center Frequency:			5530			Yes
Burst	Number of Pulses	Pulse Width (Microseconds)	Chirp Width (MHz)	Pulse 1-to-2 Spacing (µsec)	Pulse 2-to-3 Spacing (µsec)	Starting Location Within Interval (µsec)
1	3	86.4	6	1873	1894	189193
2	2	75.4	6	1276	1049	512377
3	3	84.8	6	1682	1059	834157
4	3	94.5	6	1209	1405	1156411
5	2	82	6	1697	1251	149732
6	1	56.5	6	-	1343	472962
7	2	72.5	6	1451	1383	795121
8	3	92.6	6	1869	1249	1116425
9	1	66.6	6	-	1177	110134
10						
11						
12						
13						
14						
15						
16						
17						
18						
19						
20						

Trial Number:			6			Detection (Yes/No)
Number of Bursts in Trial:			18			
Chirp Center Frequency:			5530			Yes
Burst	Number of Pulses	Pulse Width (Microseconds)	Chirp Width (MHz)	Pulse 1-to-2 Spacing (µsec)	Pulse 2-to-3 Spacing (µsec)	Starting Location Within Interval (µsec)
1	1	54.5	18	-	1791	216221
2	3	85.8	18	1582	1103	376357
3	1	53.4	18	-	1415	539032
4	2	68.2	18	1147	1398	35065
5	2	73.9	18	1663	1087	196075
6	1	59.9	18	-	1995	357502
7	1	54.7	18	-	1864	518808
8	3	99.9	18	1068	1243	15187
9	2	73.1	18	1635	1650	176099
10	1	52.3	18	-	1659	337816
11	3	87.7	18	1358	1595	496898
12	1	58.2	18	-	1577	660468
13	2	79.2	18	1507	1043	156454
14	2	74.4	18	1587	1901	317075
15	3	88	18	1646	1834	477028
16	1	54.6	18	-	1955	640235
17	3	88.1	18	1949	1531	136139
18	2	78.5	18	1986	1199	297399
19						
20						

DFS Radar Parameters
FCC Radar Type 5
Channel 106 Bandwidth 10MHz

Trial Number:			7			Detection (Yes/No)
Number of Bursts in Trial:			9			
Chirp Center Frequency:			5530			Yes
Burst	Number of Pulses	Pulse Width (Microseconds)	Chirp Width (MHz)	Pulse 1-to-2 Spacing (µsec)	Pulse 2-to-3 Spacing (µsec)	Starting Location Within Interval (µsec)
1	2	72.9	6	1631	1267	919026
2	3	90.7	6	1801	1571	1239822
3	3	96.2	6	1261	1675	233653
4	2	82.4	6	1575	1073	556712
5	2	73.8	6	1592	1735	878996
6	2	80.6	6	1021	1362	1202418
7	3	99.2	6	1402	1821	193919
8	1	65.1	6	-	1539	517390
9	1	50.4	6	-	1823	840212
10						
11						
12						
13						
14						
15						
16						
17						
18						
19						
20						

Trial Number:			8			Detection (Yes/No)
Number of Bursts in Trial:			18			
Chirp Center Frequency:			5530			Yes
Burst	Number of Pulses	Pulse Width (Microseconds)	Chirp Width (MHz)	Pulse 1-to-2 Spacing (µsec)	Pulse 2-to-3 Spacing (µsec)	Starting Location Within Interval (µsec)
1	3	98.9	18	1568	1769	578194
2	3	86.9	18	1604	1040	76884
3	2	72.5	18	1497	1121	238139
4	3	87.9	18	1651	1956	397608
5	1	55.1	18	-	1129	561501
6	3	86.1	18	1843	1767	57073
7	3	88.4	18	1246	1370	217779
8	1	50.6	18	-	1259	380130
9	2	83.2	18	1425	1164	540430
10	1	51.7	18	-	1616	37467
11	1	52.5	18	-	1404	198826
12	3	96.5	18	1381	1763	358564
13	3	92.9	18	1410	1673	519094
14	2	74.9	18	1820	1753	17547
15	3	96.6	18	1128	1768	178179
16	1	63.5	18	-	1496	340252
17	3	92.7	18	1549	1324	499451
18	3	84.6	18	1032	1257	660696
19						
20						

DFS Radar Parameters
FCC Radar Type 5
Channel 106 Bandwidth 10MHz

Trial Number:			9			Detection (Yes/No)
Number of Bursts in Trial:			9			
Chirp Center Frequency:			5530			Yes
Burst	Number of Pulses	Pulse Width (Microseconds)	Chirp Width (MHz)	Pulse 1-to-2 Spacing (µsec)	Pulse 2-to-3 Spacing (µsec)	Starting Location Within Interval (µsec)
1	1	64.4	6	-	1233	318530
2	1	57.2	6	-	1509	641474
3	1	51	6	-	1561	964446
4	3	96.8	6	1178	1740	1284875
5	3	89.8	6	1679	1532	278070
6	3	94	6	1519	1953	599941
7	2	78.1	6	1488	1546	923637
8	3	99.6	6	1564	1145	1244707
9	1	51.9	6	-	1914	238817
10						
11						
12						
13						
14						
15						
16						
17						
18						
19						
20						

Trial Number:			10			Detection (Yes/No)
Number of Bursts in Trial:			20			
Chirp Center Frequency:			5530			Yes
Burst	Number of Pulses	Pulse Width (Microseconds)	Chirp Width (MHz)	Pulse 1-to-2 Spacing (µsec)	Pulse 2-to-3 Spacing (µsec)	Starting Location Within Interval (µsec)
1	2	70.5	20	1046	1800	251940
2	2	72.2	20	1189	1952	396573
3	1	61.9	20	-	1255	543041
4	2	72.9	20	1258	1132	89340
5	2	69	20	1171	1669	234103
6	1	58.7	20	-	1602	379719
7	1	59.4	20	-	1672	524788
8	1	55.9	20	-	1186	71631
9	1	62.9	20	-	1494	216751
10	1	50.6	20	-	1841	361698
11	1	64.4	20	-	1521	507041
12	2	82.5	20	1377	1712	53571
13	2	72.2	20	1359	1702	198350
14	3	90.8	20	1671	1185	342601
15	2	73.7	20	1942	1097	487921
16	1	54.8	20	-	1123	35857
17	1	52.9	20	-	1880	180874
18	3	85.6	20	1054	1110	324882
19	2	82.1	20	1010	1245	470705
20	2	80.1	20	1052	1446	17924

DFS Radar Parameters
FCC Radar Type 5
Channel 106 Bandwidth 10MHz

Trial Number:			11			Detection (Yes/No)
Number of Bursts in Trial:			11			
Chirp Center Frequency:			5528.6			Yes
Burst	Number of Pulses	Pulse Width (Microseconds)	Chirp Width (MHz)	Pulse 1-to-2 Spacing (µsec)	Pulse 2-to-3 Spacing (µsec)	Starting Location Within Interval (µsec)
1	1	65.8	9	-	1649	296856
2	3	99.7	9	1296	1572	559614
3	2	68.8	9	1101	1983	824129
4	2	81.2	9	1867	1149	135
5	3	96	9	1482	1755	263597
6	3	84.7	9	1411	1963	526731
7	1	57.9	9	-	1886	792503
8	3	99.5	9	1348	1060	1054943
9	1	52.1	9	-	1647	231775
10	3	97.2	9	1538	1689	494560
11	2	78.6	9	1221	1628	759297
12						
13						
14						
15						
16						
17						
18						
19						
20						

Trial Number:			12			Detection (Yes/No)
Number of Bursts in Trial:			10			
Chirp Center Frequency:			5527.8			Yes
Burst	Number of Pulses	Pulse Width (Microseconds)	Chirp Width (MHz)	Pulse 1-to-2 Spacing (µsec)	Pulse 2-to-3 Spacing (µsec)	Starting Location Within Interval (µsec)
1	1	59.7	7	-	1806	1126753
2	1	55.5	7	-	1201	219269
3	3	84.2	7	1982	1779	508390
4	2	67.9	7	1529	1172	799760
5	2	78.4	7	1468	1449	1089946
6	2	71.2	7	1279	1936	183147
7	2	78.8	7	1118	1887	473489
8	3	83.5	7	1829	1957	762178
9	3	87.7	7	1790	1959	1052234
10	3	83.5	7	1678	1282	147263
11						
12						
13						
14						
15						
16						
17						
18						
19						
20						

DFS Radar Parameters
FCC Radar Type 5
Channel 106 Bandwidth 10MHz

Trial Number:			13			Detection (Yes/No)
Number of Bursts in Trial:			14			
Chirp Center Frequency:			5529.8			Yes
Burst	Number of Pulses	Pulse Width (Microseconds)	Chirp Width (MHz)	Pulse 1-to-2 Spacing (µsec)	Pulse 2-to-3 Spacing (µsec)	Starting Location Within Interval (µsec)
1	2	68.9	12	1184	1170	312588
2	3	83.6	12	1431	1217	519111
3	1	62.8	12	-	1191	728204
4	2	78.2	12	1179	1664	79693
5	1	52	12	-	1599	287305
6	3	92.3	12	1743	1459	493101
7	1	66.5	12	-	1291	702550
8	2	77.3	12	1938	1627	54125
9	3	91.9	12	1403	1062	261083
10	3	86.8	12	1016	1384	468140
11	1	58.3	12	-	1017	677199
12	3	96	12	1882	1709	28560
13	2	69.5	12	1742	1512	235731
14	3	86.1	12	1486	1754	442208
15						
16						
17						
18						
19						
20						

Trial Number:			14			Detection (Yes/No)
Number of Bursts in Trial:			9			
Chirp Center Frequency:			5527.4			Yes
Burst	Number of Pulses	Pulse Width (Microseconds)	Chirp Width (MHz)	Pulse 1-to-2 Spacing (µsec)	Pulse 2-to-3 Spacing (µsec)	Starting Location Within Interval (µsec)
1	2	70.9	6	1947	1639	1012111
2	1	53.4	6	-	1992	4874
3	2	80.8	6	1798	1014	327564
4	2	77	6	1622	1534	650090
5	3	84.4	6	1583	1890	971263
6	1	50.8	6	-	1042	1297368
7	1	60	6	-	1730	288050
8	1	53.7	6	-	1747	610998
9	1	65.8	6	-	1991	933779
10						
11						
12						
13						
14						
15						
16						
17						
18						
19						
20						

DFS Radar Parameters
FCC Radar Type 5
Channel 106 Bandwidth 10MHz

Trial Number:			15			Detection (Yes/No)
Number of Bursts in Trial:			9			
Chirp Center Frequency:			5527.8			Yes
Burst	Number of Pulses	Pulse Width (Microseconds)	Chirp Width (MHz)	Pulse 1-to-2 Spacing (µsec)	Pulse 2-to-3 Spacing (µsec)	Starting Location Within Interval (µsec)
1	2	72	7	1397	1095	1256198
2	1	54.6	7	-	1034	248399
3	2	77	7	1012	1457	570908
4	3	88	7	1781	1313	892178
5	2	72.8	7	1827	1594	1215591
6	3	95.4	7	1842	1352	208028
7	3	83.7	7	1196	1751	530298
8	2	74.2	7	1340	1530	853669
9	1	52	7	-	1039	1177967
10						
11						
12						
13						
14						
15						
16						
17						
18						
19						
20						

Trial Number:			16			Detection (Yes/No)
Number of Bursts in Trial:			18			
Chirp Center Frequency:			5531.8			Yes
Burst	Number of Pulses	Pulse Width (Microseconds)	Chirp Width (MHz)	Pulse 1-to-2 Spacing (µsec)	Pulse 2-to-3 Spacing (µsec)	Starting Location Within Interval (µsec)
1	3	94.4	17	1866	1915	83857
2	3	96.7	17	1215	1833	244340
3	3	96.9	17	1470	1490	405152
4	1	66	17	-	1764	568020
5	1	55.9	17	-	1350	64417
6	1	53	17	-	1390	225763
7	3	93.9	17	1562	1569	385114
8	3	92.4	17	1917	1975	545554
9	3	91.4	17	1342	1896	44293
10	2	72.1	17	1061	1996	205373
11	1	60.2	17	-	1160	367366
12	1	60.3	17	-	1987	528116
13	2	70.2	17	1495	1773	24594
14	1	63.8	17	-	1970	185852
15	3	86.1	17	1756	1433	345641
16	3	98.1	17	1058	1778	506322
17	3	97.1	17	1477	1187	4769
18	2	75	17	1655	1447	165712
19						
20						

DFS Radar Parameters
FCC Radar Type 5
Channel 106 Bandwidth 10MHz

Trial Number:			17			Detection (Yes/No)
Number of Bursts in Trial:			14			
Chirp Center Frequency:			5530.2			Yes
Burst	Number of Pulses	Pulse Width (Microseconds)	Chirp Width (MHz)	Pulse 1-to-2 Spacing (µsec)	Pulse 2-to-3 Spacing (µsec)	Starting Location Within Interval (µsec)
1	3	90.5	13	1555	1312	420017
2	1	51.8	13	-	1293	628872
3	3	99.2	13	1000	2000	833226
4	3	86.9	13	1981	1643	187282
5	2	73.4	13	1346	1725	394911
6	1	65.2	13	-	1155	603401
7	2	67.8	13	1945	1345	808983
8	3	90.9	13	1515	1928	161960
9	2	73.5	13	1072	1668	369540
10	2	75.1	13	1937	1721	576140
11	1	54.3	13	-	1802	784840
12	3	93.7	13	1478	1932	136442
13	2	81.9	13	1698	1681	343758
14	1	58.2	13	-	1311	552157
15						
16						
17						
18						
19						
20						

Trial Number:			18			Detection (Yes/No)
Number of Bursts in Trial:			17			
Chirp Center Frequency:			5531.4			Yes
Burst	Number of Pulses	Pulse Width (Microseconds)	Chirp Width (MHz)	Pulse 1-to-2 Spacing (µsec)	Pulse 2-to-3 Spacing (µsec)	Starting Location Within Interval (µsec)
1	1	62.6	16	-	1711	625094
2	1	56.2	16	-	1002	91798
3	1	51.6	16	-	1849	262438
4	2	72.9	16	1958	1341	432297
5	3	89.3	16	1139	1876	601557
6	1	54.8	16	-	1656	70675
7	3	97.5	16	1766	1795	240453
8	2	77.7	16	1140	1662	411598
9	2	83.1	16	1844	1144	581963
10	3	92	16	1710	1067	49457
11	1	59.4	16	-	1934	220347
12	3	87.9	16	1750	1152	389853
13	3	93.6	16	1674	1003	560095
14	1	55.4	16	-	1336	28611
15	1	51.8	16	-	1704	199382
16	3	90.9	16	1252	1736	368865
17	3	91	16	1469	1065	539300
18						
19						
20						

DFS Radar Parameters
FCC Radar Type 5
Channel 106 Bandwidth 10MHz

Trial Number:			19			Detection (Yes/No)
Number of Bursts in Trial:			17			
Chirp Center Frequency:			5531.8			Yes
Burst	Number of Pulses	Pulse Width (Microseconds)	Chirp Width (MHz)	Pulse 1-to-2 Spacing (µsec)	Pulse 2-to-3 Spacing (µsec)	Starting Location Within Interval (µsec)
1	3	89.9	17	1071.000	1224.000	7532
2	2	75.8	17	1159.000	1211.000	178176
3	2	70.4	17	1523.000	1430.000	348511
4	3	93.2	17	1797.000	1761.000	517537
5	2	72.3	17	1333.000	1543.000	689552
6	1	52.9	17	-	1810.000	157284
7	1	57.5	17	-	1919.000	327993
8	2	73.2	17	1458.000	1633.000	497896
9	2	81.7	17	1080.000	1514.000	668818
10	3	98.2	17	1138.000	1112.000	135957
11	1	65.1	17	-	1406.000	307187
12	2	79.5	17	1301.000	1830.000	476874
13	2	68.8	17	1247.000	1306.000	647846
14	3	88.1	17	1541.000	1463.000	114821
15	3	97.8	17	1930.000	1396.000	284733
16	3	90.2	17	1902.000	1166.000	454680
17	1	51.9	17	-	1875.000	627438
18						
19						
20						

Trial Number:			20			Detection (Yes/No)
Number of Bursts in Trial:			16			
Chirp Center Frequency:			5530.6			Yes
Burst	Number of Pulses	Pulse Width (Microseconds)	Chirp Width (MHz)	Pulse 1-to-2 Spacing (µsec)	Pulse 2-to-3 Spacing (µsec)	Starting Location Within Interval (µsec)
1	3	97.7	14	1872	1347	99657
2	1	63.9	14	-	1483	281667
3	1	62.1	14	-	1248	463352
4	1	63.1	14	-	1903	644383
5	1	58.8	14	-	1540	77761
6	3	92.2	14	1878	1939	257841
7	2	77.5	14	1590	1302	440015
8	1	62.7	14	-	1948	621997
9	2	68.7	14	1194	1517	55315
10	1	57.2	14	-	1997	236782
11	2	77.4	14	1784	1625	417407
12	3	85.5	14	1724	1759	597437
13	2	71.6	14	1554	1999	32953
14	1	62.3	14	-	1732	214512
15	3	89	14	1460	1812	394407
16	2	82.6	14	1962	1660	576010
17						
18						
19						
20						

DFS Radar Parameters
FCC Radar Type 5
Channel 106 Bandwidth 10MHz

Trial Number:			21			Detection (Yes/No)
Number of Bursts in Trial:			15			
Chirp Center Frequency:			5529.8			Yes
Burst	Number of Pulses	Pulse Width (Microseconds)	Chirp Width (MHz)	Pulse 1-to-2 Spacing (µsec)	Pulse 2-to-3 Spacing (µsec)	Starting Location Within Interval (µsec)
1	3	84.2	13	1906	1545	11350
2	1	64.4	13	-	1961	204939
3	2	67.9	13	1226	1921	397896
4	1	61.5	13	-	1976	592028
5	1	65	13	-	1131	786406
6	3	90.3	13	1489	1846	180440
7	1	53.3	13	-	1969	374644
8	3	94.2	13	1615	1476	566414
9	3	99.7	13	1748	1094	759412
10	1	57.6	13	-	1839	157281
11	1	56.6	13	-	1837	350862
12	2	82.3	13	1652	1473	543562
13	3	98.2	13	1758	1516	735365
14	1	64.3	13	-	1389	133512
15	1	53.8	13	-	1037	327345
16						
17						
18						
19						
20						

Trial Number:			22			Detection (Yes/No)
Number of Bursts in Trial:			20			
Chirp Center Frequency:			5527.4			Yes
Burst	Number of Pulses	Pulse Width (Microseconds)	Chirp Width (MHz)	Pulse 1-to-2 Spacing (µsec)	Pulse 2-to-3 Spacing (µsec)	Starting Location Within Interval (µsec)
1	1	61.7	19	-	1213	390555
2	3	97.8	19	1413	1455	532608
3	3	91.6	19	1271	1263	81865
4	1	57.8	19	-	1036	227509
5	3	87.9	19	1220	1304	370930
6	2	78.8	19	1544	1693	516141
7	2	77.8	19	1788	1847	64069
8	2	81.1	19	1435	1083	209097
9	3	83.6	19	1813	1256	352652
10	3	92.9	19	1720	1898	497032
11	2	80.5	19	1811	1454	46281
12	1	53.6	19	-	1151	191685
13	3	95.8	19	1366	1723	334930
14	2	80.1	19	1782	1230	480666
15	3	87.7	19	1326	1182	28425
16	1	60	19	-	1737	173625
17	3	85.9	19	1977	1090	317062
18	2	76.2	19	1356	1979	462581
19	3	97	19	1508	1940	10590
20	3	84.7	19	1320	1272	155220

DFS Radar Parameters
FCC Radar Type 5
Channel 106 Bandwidth 10MHz

Trial Number:			23			Detection (Yes/No)
Number of Bursts in Trial:			11			
Chirp Center Frequency:			5531.4			Yes
Burst	Number of Pulses	Pulse Width (Microseconds)	Chirp Width (MHz)	Pulse 1-to-2 Spacing (µsec)	Pulse 2-to-3 Spacing (µsec)	Starting Location Within Interval (µsec)
1	2	73.7	9	1116	1729	547157
2	2	79.9	9	1870	1973	810303
3	2	78.7	9	1692	1057	1075031
4	3	86.9	9	1550	1364	250401
5	1	57.3	9	-	1214	515423
6	1	60.6	9	-	1644	779401
7	2	68	9	1353	1007	1042896
8	1	63.5	9	-	1831	218460
9	1	51.2	9	-	1030	482950
10	3	85.5	9	1814	1141	744899
11	3	95.3	9	1104	1680	1008928
12						
13						
14						
15						
16						
17						
18						
19						
20						

Trial Number:			24			Detection (Yes/No)
Number of Bursts in Trial:			17			
Chirp Center Frequency:			5528.6			Yes
Burst	Number of Pulses	Pulse Width (Microseconds)	Chirp Width (MHz)	Pulse 1-to-2 Spacing (µsec)	Pulse 2-to-3 Spacing (µsec)	Starting Location Within Interval (µsec)
1	1	64.5	16	-	1195	120302
2	1	54.3	16	-	1589	291048
3	1	53.3	16	-	1114	462173
4	1	65.7	16	-	1931	632368
5	3	87.8	16	1367	1690	98774
6	2	80.1	16	1240	1102	269719
7	1	54.5	16	-	1638	440791
8	1	51.1	16	-	1815	611439
9	1	53.7	16	-	1423	78173
10	1	56.3	16	-	1726	248919
11	2	83.3	16	1968	1238	418817
12	3	84.3	16	1695	1567	588294
13	2	68.6	16	1033	1688	57022
14	3	84.6	16	1450	1106	227110
15	3	86.7	16	1327	1874	396805
16	1	57.5	16	-	1920	569287
17	1	64	16	-	1803	36063
18						
19						
20						

DFS Radar Parameters
FCC Radar Type 5
Channel 106 Bandwidth 10MHz

Trial Number:			25			Detection (Yes/No)
Number of Bursts in Trial:			16			
Chirp Center Frequency:			5529			Yes
Burst	Number of Pulses	Pulse Width (Microseconds)	Chirp Width (MHz)	Pulse 1-to-2 Spacing (µsec)	Pulse 2-to-3 Spacing (µsec)	Starting Location Within Interval (µsec)
1	1	62	15	-	1883	219760
2	3	97.6	15	1077	1167	400320
3	2	70.8	15	1024	1860	581864
4	1	56.1	15	-	1601	15975
5	1	51.2	15	-	1290	197567
6	2	79.7	15	1990	1391	378094
7	2	80.1	15	1270	1361	559734
8	2	81.8	15	1706	1908	740020
9	2	69	15	1407	1262	174877
10	1	54.6	15	-	1392	356737
11	1	50.4	15	-	1412	538284
12	2	77.2	15	1832	1718	717784
13	1	60.7	15	-	1998	152688
14	1	64.3	15	-	1015	334541
15	2	79.9	15	1219	1480	515033
16	3	98.1	15	1716	1774	693816
17						
18						
19						
20						

Trial Number:			26			Detection (Yes/No)
Number of Bursts in Trial:			15			
Chirp Center Frequency:			5529.4			Yes
Burst	Number of Pulses	Pulse Width (Microseconds)	Chirp Width (MHz)	Pulse 1-to-2 Spacing (µsec)	Pulse 2-to-3 Spacing (µsec)	Starting Location Within Interval (µsec)
1	3	97.7	14	1705	1314	138675
2	1	65.9	14	-	1048	332991
3	3	99.3	14	1465	1630	524723
4	3	92.4	14	1641	1744	717375
5	1	64.4	14	-	1506	115286
6	3	99.9	14	1076	1484	307804
7	2	80	14	1504	1518	501652
8	2	81.3	14	1093	1700	695144
9	2	75	14	1444	1852	91227
10	3	93.2	14	1988	1585	283689
11	2	78.3	14	1315	1063	478229
12	3	90.4	14	1098	1096	670680
13	3	95.7	14	1636	1749	67308
14	1	60.1	14	-	1499	261239
15	1	52.3	14	-	1440	454935
16						
17						
18						
19						
20						

DFS Radar Parameters
FCC Radar Type 5
Channel 106 Bandwidth 10MHz

Trial Number:			27			Detection (Yes/No)
Number of Bursts in Trial:			9			
Chirp Center Frequency:			5532.2			Yes
Burst	Number of Pulses	Pulse Width (Microseconds)	Chirp Width (MHz)	Pulse 1-to-2 Spacing (µsec)	Pulse 2-to-3 Spacing (µsec)	Starting Location Within Interval (µsec)
1	2	70.7	7	1964	1676	1080011
2	1	53.1	7	-	1351	72934
3	1	54	7	-	1462	395949
4	1	51.4	7	-	1019	719209
5	1	53.6	7	-	1297	1042120
6	1	64.7	7	-	1429	33140
7	3	89.2	7	1134	1284	355428
8	1	63.3	7	-	1409	679208
9	2	74.7	7	1686	1605	1000826
10						
11						
12						
13						
14						
15						
16						
17						
18						
19						
20						

Trial Number:			28			Detection (Yes/No)
Number of Bursts in Trial:			10			
Chirp Center Frequency:			5531.8			Yes
Burst	Number of Pulses	Pulse Width (Microseconds)	Chirp Width (MHz)	Pulse 1-to-2 Spacing (µsec)	Pulse 2-to-3 Spacing (µsec)	Starting Location Within Interval (µsec)
1	2	73.3	8	1006	1871	1191147
2	3	83.9	8	1624	1891	283890
3	2	68.8	8	1881	1576	574425
4	2	75.4	8	1020	1286	865457
5	1	54.1	8	-	1428	1156782
6	2	74	8	1626	1025	248647
7	3	93.1	8	1325	1708	538124
8	3	92	8	1344	1775	828254
9	1	53.4	8	-	1408	1120994
10	3	86.2	8	1971	1573	212364
11						
12						
13						
14						
15						
16						
17						
18						
19						
20						

DFS Radar Parameters
FCC Radar Type 5
Channel 106 Bandwidth 10MHz

Trial Number:			29			Detection (Yes/No)
Number of Bursts in Trial:			10			
Chirp Center Frequency:			5532.2			Yes
Burst	Number of Pulses	Pulse Width (Microseconds)	Chirp Width (MHz)	Pulse 1-to-2 Spacing (µsec)	Pulse 2-to-3 Spacing (µsec)	Starting Location Within Interval (µsec)
1	2	70.9	7	1001	1498	503336
2	2	68.7	7	1560	1099	793662
3	3	87.4	7	1500	1817	1081855
4	1	65.2	7	-	1222	177319
5	3	99.6	7	1157	1588	467055
6	1	62.1	7	-	1464	758649
7	2	67.6	7	1018	1216	1048657
8	3	89.6	7	1372	1330	141212
9	2	81.1	7	1596	1175	431689
10	1	58	7	-	1236	722980
11						
12						
13						
14						
15						
16						
17						
18						
19						
20						

Trial Number:			30			Detection (Yes/No)
Number of Bursts in Trial:			20			
Chirp Center Frequency:			5527			Yes
Burst	Number of Pulses	Pulse Width (Microseconds)	Chirp Width (MHz)	Pulse 1-to-2 Spacing (µsec)	Pulse 2-to-3 Spacing (µsec)	Starting Location Within Interval (µsec)
1	1	51.4	20	-	1609	506021
2	3	89.7	20	1897	1280	52498
3	3	86.2	20	1794	1855	196772
4	1	58.9	20	-	1581	343032
5	1	52.3	20	-	1809	487982
6	2	79.7	20	1202	1826	34800
7	2	74.1	20	1804	1796	179412
8	1	56.7	20	-	1960	324949
9	1	62.8	20	-	1448	470395
10	2	76.2	20	1323	1777	16963
11	3	83.4	20	1288	1461	161353
12	1	58.5	20	-	1785	307173
13	1	52.5	20	-	1481	452488
14	2	74.6	20	1719	1471	595942
15	2	69.1	20	1294	1943	143865
16	2	80.5	20	1713	1492	288615
17	2	81.1	20	1026	1526	433830
18	1	54.5	20	-	1893	579369
19	2	77.1	20	1108	1355	126201
20	1	51	20	-	1772	271436

Channel 106 Bandwidth 20MHz

Report Number : FZ561115-04A

DFS Radar Parameters
FCC Radar Type 1
Channel 106 Bandwidth 20MHz

Trial #	Pulse Repetition Frequency Number (1 to 23)	Pulse Repetition Frequency (Pulses Per Second)	Pulse Repetition Interval (Microseconds)	Detection (Yes / No)
1	3	1792.11	558	Y
2	12	326.16	3066	Y
3	21	1089.32	918	Y
4	13	1319.26	758	Y
5	10	1432.66	698	Y
6	14	1285.35	778	Y
7	4	1730.10	578	Y
8	7	1567.40	638	Y
9	20	1113.59	898	Y
10	6	1618.12	618	Y
11	5	1672.24	598	Y
12	18	1165.50	858	Y
13	17	1193.32	838	Y
14	1	1930.50	518	Y
15	15	1253.13	798	Y
16		364.56	2743	Y
17		1267.43	789	Y
18		396.67	2521	Y
19		611.62	1635	Y
20		827.13	1209	Y
21		545.85	1832	Y
22		603.14	1658	Y
23		598.80	1670	Y
24		617.67	1619	Y
25		1785.71	560	Y
26		505.82	1977	Y
27		677.05	1477	Y
28		734.75	1361	Y
29		416.49	2401	Y
30		462.96	2160	Y

DFS Radar Parameters
FCC Radar Type 2
Channel 106 Bandwidth 20MHz

Trial #	Number Pulses per Burst	Pulse Width (Microseconds)	Pulse Repetition Interval (Microseconds)	Detection (Yes / No)
1	28	4.40	162	Y
2	28	4.00	187	Y
3	24	1.70	205	Y
4	25	2.60	178	Y
5	23	1.40	218	Y
6	28	4.40	221	Y
7	23	1.30	166	Y
8	28	4.30	159	Y
9	23	1.40	201	Y
10	29	4.90	152	Y
11	24	2.00	195	Y
12	24	1.70	211	Y
13	26	2.90	151	Y
14	23	1.30	207	Y
15	23	1.50	161	Y
16	28	4.20	223	Y
17	26	3.00	180	Y
18	28	3.90	158	Y
19	28	4.10	208	Y
20	27	3.50	198	Y
21	26	3.20	214	Y
22	29	4.80	156	Y
23	25	2.20	202	Y
24	28	4.00	228	Y
25	27	3.80	150	Y
26	27	3.40	190	Y
27	23	1.50	200	Y
28	24	1.80	210	Y
29	24	1.70	197	Y
30	29	5.00	193	Y

DFS Radar Parameters
FCC Radar Type 3
Channel 106 Bandwidth 20MHz

Trial #	Number Pulses per Burst	Pulse Width (Microseconds)	Pulse Repetition Interval (Microseconds)	Detection (Yes / No)
1	18	9.40	250	Y
2	18	9.00	262	Y
3	16	6.70	282	Y
4	17	7.60	419	Y
5	16	6.40	469	Y
6	18	9.40	209	Y
7	16	6.30	268	Y
8	18	9.30	378	Y
9	16	6.40	230	Y
10	18	9.90	257	Y
11	16	7.00	479	Y
12	16	6.70	286	Y
13	17	7.90	433	Y
14	16	6.30	244	Y
15	16	6.50	204	Y
16	18	9.20	369	Y
17	17	8.00	271	Y
18	18	8.90	458	Y
19	18	9.10	267	Y
20	17	8.50	461	Y
21	17	8.20	355	Y
22	18	9.80	329	Y
23	16	7.20	444	Y
24	18	9.00	394	Y
25	18	8.80	440	Y
26	17	8.40	462	Y
27	16	6.50	281	Y
28	16	6.80	298	Y
29	16	6.70	482	Y
30	18	10.00	345	Y

DFS Radar Parameters
FCC Radar Type 4
Channel 106 Bandwidth 20MHz

Trial #	Number Pulses per Burst	Pulse Width (Microseconds)	Pulse Repetition Interval (Microseconds)	Detection (Yes / No)
1	16	18.50	250	Y
2	15	17.80	262	Y
3	12	12.70	282	Y
4	14	14.70	419	Y
5	12	11.80	469	Y
6	16	18.50	209	Y
7	12	11.70	268	Y
8	16	18.40	378	Y
9	12	11.90	230	Y
10	16	19.70	257	Y
11	13	13.30	479	Y
12	12	12.60	286	Y
13	14	15.20	433	Y
14	12	11.80	244	Y
15	12	12.10	204	Y
16	16	18.20	369	Y
17	14	15.60	271	Y
18	15	17.50	458	Y
19	15	17.90	267	Y
20	15	16.60	461	Y
21	14	16.00	355	Y
22	16	19.40	329	Y
23	13	13.70	444	Y
24	15	17.70	394	Y
25	15	17.20	440	Y
26	14	16.30	462	Y
27	12	12.20	281	Y
28	12	12.70	298	Y
29	12	12.60	482	Y
30	16	19.80	345	Y

DFS Radar Parameters
FCC Radar Type 5
Channel 106 Bandwidth 20MHz

Trial Number:			1			Detection (Yes/No)
Number of Bursts in Trial:			18			
Chirp Center Frequency:			5530			Yes
Burst	Number of Pulses	Pulse Width (Microseconds)	Chirp Width (MHz)	Pulse 1-to-2 Spacing (µsec)	Pulse 2-to-3 Spacing (µsec)	Starting Location Within Interval (µsec)
1	3	91.7	18	1598	1174	50049
2	3	87.6	18	1731	1799	210603
3	1	59.6	18	-	1250	373075
4	2	70.6	18	1972	1378	532773
5	1	54.9	18	-	1143	30432
6	3	91.7	18	1295	1603	190978
7	1	54.2	18	-	1793	352908
8	3	90.9	18	1146	1318	512779
9	1	55.3	18	-	1513	10544
10	3	98.2	18	1765	1848	170951
11	1	62.8	18	-	1349	333267
12	1	59	18	-	1393	494595
13	2	73.6	18	1438	1892	654035
14	1	54.5	18	-	1208	152063
15	1	56.2	18	-	1232	313447
16	3	90.1	18	1780	1687	471928
17	2	75.4	18	1086	1055	635355
18	3	85.8	18	1717	1161	131596
19						
20						

Trial Number:			2			Detection (Yes/No)
Number of Bursts in Trial:			17			
Chirp Center Frequency:			5530			Yes
Burst	Number of Pulses	Pulse Width (Microseconds)	Chirp Width (MHz)	Pulse 1-to-2 Spacing (µsec)	Pulse 2-to-3 Spacing (µsec)	Starting Location Within Interval (µsec)
1	3	88.5	17	1292	1124	309787
2	2	81.1	17	1965	1254	480409
3	2	77.7	17	1944	1527	650594
4	3	96.7	17	1176	1394	118400
5	1	65.3	17	-	1760	289600
6	3	86.9	17	1993	1707	458057
7	3	84.2	17	1107	1316	629583
8	2	79.5	17	1229	1205	97699
9	1	56.9	17	-	1614	268620
10	1	59.8	17	-	1776	439327
11	1	58.8	17	-	1907	609981
12	3	98.9	17	1385	1818	76481
13	2	75.7	17	1578	1770	246971
14	2	70.3	17	1329	1081	417915
15	3	92.5	17	1022	1031	587301
16	2	69	17	1556	1305	55635
17	2	68.8	17	1183	1752	226116
18						
19						
20						

DFS Radar Parameters
FCC Radar Type 5
Channel 106 Bandwidth 20MHz

Trial Number:			3			Detection (Yes/No)
Number of Bursts in Trial:			10			
Chirp Center Frequency:			5530			Yes
Burst	Number of Pulses	Pulse Width (Microseconds)	Chirp Width (MHz)	Pulse 1-to-2 Spacing (µsec)	Pulse 2-to-3 Spacing (µsec)	Starting Location Within Interval (µsec)
1	1	52.8	8	-	1386	676257
2	2	71.8	8	1950	1119	965601
3	1	51.5	8	-	1044	59063
4	2	75.9	8	1967	1309	349197
5	3	83.7	8	1133	1273	639336
6	2	81.3	8	1909	1741	929393
7	1	54.5	8	-	1307	23240
8	3	94.4	8	1148	1335	313147
9	2	77.7	8	1640	1434	603790
10	2	78.7	8	1580	1703	893927
11						
12						
13						
14						
15						
16						
17						
18						
19						
20						

Trial Number:			4			Detection (Yes/No)
Number of Bursts in Trial:			13			
Chirp Center Frequency:			5530			Yes
Burst	Number of Pulses	Pulse Width (Microseconds)	Chirp Width (MHz)	Pulse 1-to-2 Spacing (µsec)	Pulse 2-to-3 Spacing (µsec)	Starting Location Within Interval (µsec)
1	1	55	11	-	1439	911974
2	1	55.1	11	-	1427	213865
3	2	68.9	11	1863	1069	436679
4	1	55.1	11	-	1100	661157
5	2	70.7	11	1738	1691	882531
6	2	70.3	11	1941	1135	185997
7	1	52.7	11	-	1819	409686
8	2	79.7	11	1694	1926	631882
9	3	96.4	11	1281	1339	854349
10	3	86.7	11	1851	1510	158145
11	3	95	11	1277	1505	381337
12	2	72.3	11	1027	1924	604854
13	2	72.7	11	1127	1951	827899
14						
15						
16						
17						
18						
19						
20						

DFS Radar Parameters
FCC Radar Type 5
Channel 106 Bandwidth 20MHz

Trial Number:			5			Detection (Yes/No)
Number of Bursts in Trial:			9			
Chirp Center Frequency:			5530			Yes
Burst	Number of Pulses	Pulse Width (Microseconds)	Chirp Width (MHz)	Pulse 1-to-2 Spacing (µsec)	Pulse 2-to-3 Spacing (µsec)	Starting Location Within Interval (µsec)
1	3	86.4	6	1873	1894	189193
2	2	75.4	6	1276	1049	512377
3	3	84.8	6	1682	1059	834157
4	3	94.5	6	1209	1405	1156411
5	2	82	6	1697	1251	149732
6	1	56.5	6	-	1343	472962
7	2	72.5	6	1451	1383	795121
8	3	92.6	6	1869	1249	1116425
9	1	66.6	6	-	1177	110134
10						
11						
12						
13						
14						
15						
16						
17						
18						
19						
20						

Trial Number:			6			Detection (Yes/No)
Number of Bursts in Trial:			18			
Chirp Center Frequency:			5530			Yes
Burst	Number of Pulses	Pulse Width (Microseconds)	Chirp Width (MHz)	Pulse 1-to-2 Spacing (µsec)	Pulse 2-to-3 Spacing (µsec)	Starting Location Within Interval (µsec)
1	1	54.5	18	-	1791	216221
2	3	85.8	18	1582	1103	376357
3	1	53.4	18	-	1415	539032
4	2	68.2	18	1147	1398	35065
5	2	73.9	18	1663	1087	196075
6	1	59.9	18	-	1995	357502
7	1	54.7	18	-	1864	518808
8	3	99.9	18	1068	1243	15187
9	2	73.1	18	1635	1650	176099
10	1	52.3	18	-	1659	337816
11	3	87.7	18	1358	1595	496898
12	1	58.2	18	-	1577	660468
13	2	79.2	18	1507	1043	156454
14	2	74.4	18	1587	1901	317075
15	3	88	18	1646	1834	477028
16	1	54.6	18	-	1955	640235
17	3	88.1	18	1949	1531	136139
18	2	78.5	18	1986	1199	297399
19						
20						

DFS Radar Parameters
FCC Radar Type 5
Channel 106 Bandwidth 20MHz

Trial Number:			7			Detection (Yes/No)
Number of Bursts in Trial:			9			
Chirp Center Frequency:			5530			Yes
Burst	Number of Pulses	Pulse Width (Microseconds)	Chirp Width (MHz)	Pulse 1-to-2 Spacing (µsec)	Pulse 2-to-3 Spacing (µsec)	Starting Location Within Interval (µsec)
1	2	72.9	6	1631	1267	919026
2	3	90.7	6	1801	1571	1239822
3	3	96.2	6	1261	1675	233653
4	2	82.4	6	1575	1073	556712
5	2	73.8	6	1592	1735	878996
6	2	80.6	6	1021	1362	1202418
7	3	99.2	6	1402	1821	193919
8	1	65.1	6	-	1539	517390
9	1	50.4	6	-	1823	840212
10						
11						
12						
13						
14						
15						
16						
17						
18						
19						
20						

Trial Number:			8			Detection (Yes/No)
Number of Bursts in Trial:			18			
Chirp Center Frequency:			5530			Yes
Burst	Number of Pulses	Pulse Width (Microseconds)	Chirp Width (MHz)	Pulse 1-to-2 Spacing (µsec)	Pulse 2-to-3 Spacing (µsec)	Starting Location Within Interval (µsec)
1	3	98.9	18	1568	1769	578194
2	3	86.9	18	1604	1040	76884
3	2	72.5	18	1497	1121	238139
4	3	87.9	18	1651	1956	397608
5	1	55.1	18	-	1129	561501
6	3	86.1	18	1843	1767	57073
7	3	88.4	18	1246	1370	217779
8	1	50.6	18	-	1259	380130
9	2	83.2	18	1425	1164	540430
10	1	51.7	18	-	1616	37467
11	1	52.5	18	-	1404	198826
12	3	96.5	18	1381	1763	358564
13	3	92.9	18	1410	1673	519094
14	2	74.9	18	1820	1753	17547
15	3	96.6	18	1128	1768	178179
16	1	63.5	18	-	1496	340252
17	3	92.7	18	1549	1324	499451
18	3	84.6	18	1032	1257	660696
19						
20						

DFS Radar Parameters
FCC Radar Type 5
Channel 106 Bandwidth 20MHz

Trial Number:			9			Detection (Yes/No)
Number of Bursts in Trial:			9			
Chirp Center Frequency:			5530			Yes
Burst	Number of Pulses	Pulse Width (Microseconds)	Chirp Width (MHz)	Pulse 1-to-2 Spacing (µsec)	Pulse 2-to-3 Spacing (µsec)	Starting Location Within Interval (µsec)
1	1	64.4	6	-	1233	318530
2	1	57.2	6	-	1509	641474
3	1	51	6	-	1561	964446
4	3	96.8	6	1178	1740	1284875
5	3	89.8	6	1679	1532	278070
6	3	94	6	1519	1953	599941
7	2	78.1	6	1488	1546	923637
8	3	99.6	6	1564	1145	1244707
9	1	51.9	6	-	1914	238817
10						
11						
12						
13						
14						
15						
16						
17						
18						
19						
20						

Trial Number:			10			Detection (Yes/No)
Number of Bursts in Trial:			20			
Chirp Center Frequency:			5530			Yes
Burst	Number of Pulses	Pulse Width (Microseconds)	Chirp Width (MHz)	Pulse 1-to-2 Spacing (µsec)	Pulse 2-to-3 Spacing (µsec)	Starting Location Within Interval (µsec)
1	2	70.5	20	1046	1800	251940
2	2	72.2	20	1189	1952	396573
3	1	61.9	20	-	1255	543041
4	2	72.9	20	1258	1132	89340
5	2	69	20	1171	1669	234103
6	1	58.7	20	-	1602	379719
7	1	59.4	20	-	1672	524788
8	1	55.9	20	-	1186	71631
9	1	62.9	20	-	1494	216751
10	1	50.6	20	-	1841	361698
11	1	64.4	20	-	1521	507041
12	2	82.5	20	1377	1712	53571
13	2	72.2	20	1359	1702	198350
14	3	90.8	20	1671	1185	342601
15	2	73.7	20	1942	1097	487921
16	1	54.8	20	-	1123	35857
17	1	52.9	20	-	1880	180874
18	3	85.6	20	1054	1110	324882
19	2	82.1	20	1010	1245	470705
20	2	80.1	20	1052	1446	17924

DFS Radar Parameters
FCC Radar Type 5
Channel 106 Bandwidth 20MHz

Trial Number:			11			Detection (Yes/No)
Number of Bursts in Trial:			11			
Chirp Center Frequency:			5524.6			Yes
Burst	Number of Pulses	Pulse Width (Microseconds)	Chirp Width (MHz)	Pulse 1-to-2 Spacing (µsec)	Pulse 2-to-3 Spacing (µsec)	Starting Location Within Interval (µsec)
1	1	65.8	9	-	1649	296856
2	3	99.7	9	1296	1572	559614
3	2	68.8	9	1101	1983	824129
4	2	81.2	9	1867	1149	135
5	3	96	9	1482	1755	263597
6	3	84.7	9	1411	1963	526731
7	1	57.9	9	-	1886	792503
8	3	99.5	9	1348	1060	1054943
9	1	52.1	9	-	1647	231775
10	3	97.2	9	1538	1689	494560
11	2	78.6	9	1221	1628	759297
12						
13						
14						
15						
16						
17						
18						
19						
20						

Trial Number:			12			Detection (Yes/No)
Number of Bursts in Trial:			10			
Chirp Center Frequency:			5523.8			Yes
Burst	Number of Pulses	Pulse Width (Microseconds)	Chirp Width (MHz)	Pulse 1-to-2 Spacing (µsec)	Pulse 2-to-3 Spacing (µsec)	Starting Location Within Interval (µsec)
1	1	59.7	7	-	1806	1126753
2	1	55.5	7	-	1201	219269
3	3	84.2	7	1982	1779	508390
4	2	67.9	7	1529	1172	799760
5	2	78.4	7	1468	1449	1089946
6	2	71.2	7	1279	1936	183147
7	2	78.8	7	1118	1887	473489
8	3	83.5	7	1829	1957	762178
9	3	87.7	7	1790	1959	1052234
10	3	83.5	7	1678	1282	147263
11						
12						
13						
14						
15						
16						
17						
18						
19						
20						

DFS Radar Parameters
FCC Radar Type 5
Channel 106 Bandwidth 20MHz

Trial Number:			13			Detection (Yes/No)
Number of Bursts in Trial:			14			
Chirp Center Frequency:			5525.8			Yes
Burst	Number of Pulses	Pulse Width (Microseconds)	Chirp Width (MHz)	Pulse 1-to-2 Spacing (µsec)	Pulse 2-to-3 Spacing (µsec)	Starting Location Within Interval (µsec)
1	2	68.9	12	1184	1170	312588
2	3	83.6	12	1431	1217	519111
3	1	62.8	12	-	1191	728204
4	2	78.2	12	1179	1664	79693
5	1	52	12	-	1599	287305
6	3	92.3	12	1743	1459	493101
7	1	66.5	12	-	1291	702550
8	2	77.3	12	1938	1627	54125
9	3	91.9	12	1403	1062	261083
10	3	86.8	12	1016	1384	468140
11	1	58.3	12	-	1017	677199
12	3	96	12	1882	1709	28560
13	2	69.5	12	1742	1512	235731
14	3	86.1	12	1486	1754	442208
15						
16						
17						
18						
19						
20						

Trial Number:			14			Detection (Yes/No)
Number of Bursts in Trial:			9			
Chirp Center Frequency:			5523.4			Yes
Burst	Number of Pulses	Pulse Width (Microseconds)	Chirp Width (MHz)	Pulse 1-to-2 Spacing (µsec)	Pulse 2-to-3 Spacing (µsec)	Starting Location Within Interval (µsec)
1	2	70.9	6	1947	1639	1012111
2	1	53.4	6	-	1992	4874
3	2	80.8	6	1798	1014	327564
4	2	77	6	1622	1534	650090
5	3	84.4	6	1583	1890	971263
6	1	50.8	6	-	1042	1297368
7	1	60	6	-	1730	288050
8	1	53.7	6	-	1747	610998
9	1	65.8	6	-	1991	933779
10						
11						
12						
13						
14						
15						
16						
17						
18						
19						
20						

DFS Radar Parameters
FCC Radar Type 5
Channel 106 Bandwidth 20MHz

Trial Number:			15			Detection (Yes/No)
Number of Bursts in Trial:			9			
Chirp Center Frequency:			5523.8			Yes
Burst	Number of Pulses	Pulse Width (Microseconds)	Chirp Width (MHz)	Pulse 1-to-2 Spacing (µsec)	Pulse 2-to-3 Spacing (µsec)	Starting Location Within Interval (µsec)
1	2	72	7	1397	1095	1256198
2	1	54.6	7	-	1034	248399
3	2	77	7	1012	1457	570908
4	3	88	7	1781	1313	892178
5	2	72.8	7	1827	1594	1215591
6	3	95.4	7	1842	1352	208028
7	3	83.7	7	1196	1751	530298
8	2	74.2	7	1340	1530	853669
9	1	52	7	-	1039	1177967
10						
11						
12						
13						
14						
15						
16						
17						
18						
19						
20						

Trial Number:			16			Detection (Yes/No)
Number of Bursts in Trial:			18			
Chirp Center Frequency:			5527.8			Yes
Burst	Number of Pulses	Pulse Width (Microseconds)	Chirp Width (MHz)	Pulse 1-to-2 Spacing (µsec)	Pulse 2-to-3 Spacing (µsec)	Starting Location Within Interval (µsec)
1	3	94.4	17	1866	1915	83857
2	3	96.7	17	1215	1833	244340
3	3	96.9	17	1470	1490	405152
4	1	66	17	-	1764	568020
5	1	55.9	17	-	1350	64417
6	1	53	17	-	1390	225763
7	3	93.9	17	1562	1569	385114
8	3	92.4	17	1917	1975	545554
9	3	91.4	17	1342	1896	44293
10	2	72.1	17	1061	1996	205373
11	1	60.2	17	-	1160	367366
12	1	60.3	17	-	1987	528116
13	2	70.2	17	1495	1773	24594
14	1	63.8	17	-	1970	185852
15	3	86.1	17	1756	1433	345641
16	3	98.1	17	1058	1778	506322
17	3	97.1	17	1477	1187	4769
18	2	75	17	1655	1447	165712
19						
20						

DFS Radar Parameters
FCC Radar Type 5
Channel 106 Bandwidth 20MHz

Trial Number:			17			Detection (Yes/No)
Number of Bursts in Trial:			14			
Chirp Center Frequency:			5526.2			Yes
Burst	Number of Pulses	Pulse Width (Microseconds)	Chirp Width (MHz)	Pulse 1-to-2 Spacing (µsec)	Pulse 2-to-3 Spacing (µsec)	Starting Location Within Interval (µsec)
1	3	90.5	13	1555	1312	420017
2	1	51.8	13	-	1293	628872
3	3	99.2	13	1000	2000	833226
4	3	86.9	13	1981	1643	187282
5	2	73.4	13	1346	1725	394911
6	1	65.2	13	-	1155	603401
7	2	67.8	13	1945	1345	808983
8	3	90.9	13	1515	1928	161960
9	2	73.5	13	1072	1668	369540
10	2	75.1	13	1937	1721	576140
11	1	54.3	13	-	1802	784840
12	3	93.7	13	1478	1932	136442
13	2	81.9	13	1698	1681	343758
14	1	58.2	13	-	1311	552157
15						
16						
17						
18						
19						
20						

Trial Number:			18			Detection (Yes/No)
Number of Bursts in Trial:			17			
Chirp Center Frequency:			5527.4			Yes
Burst	Number of Pulses	Pulse Width (Microseconds)	Chirp Width (MHz)	Pulse 1-to-2 Spacing (µsec)	Pulse 2-to-3 Spacing (µsec)	Starting Location Within Interval (µsec)
1	1	62.6	16	-	1711	625094
2	1	56.2	16	-	1002	91798
3	1	51.6	16	-	1849	262438
4	2	72.9	16	1958	1341	432297
5	3	89.3	16	1139	1876	601557
6	1	54.8	16	-	1656	70675
7	3	97.5	16	1766	1795	240453
8	2	77.7	16	1140	1662	411598
9	2	83.1	16	1844	1144	581963
10	3	92	16	1710	1067	49457
11	1	59.4	16	-	1934	220347
12	3	87.9	16	1750	1152	389853
13	3	93.6	16	1674	1003	560095
14	1	55.4	16	-	1336	28611
15	1	51.8	16	-	1704	199382
16	3	90.9	16	1252	1736	368865
17	3	91	16	1469	1065	539300
18						
19						
20						

DFS Radar Parameters
FCC Radar Type 5
Channel 106 Bandwidth 20MHz

Trial Number:			19			Detection (Yes/No)
Number of Bursts in Trial:			17			
Chirp Center Frequency:			5527.8			Yes
Burst	Number of Pulses	Pulse Width (Microseconds)	Chirp Width (MHz)	Pulse 1-to-2 Spacing (µsec)	Pulse 2-to-3 Spacing (µsec)	Starting Location Within Interval (µsec)
1	3	89.9	17	1071.000	1224.000	7532
2	2	75.8	17	1159.000	1211.000	178176
3	2	70.4	17	1523.000	1430.000	348511
4	3	93.2	17	1797.000	1761.000	517537
5	2	72.3	17	1333.000	1543.000	689552
6	1	52.9	17	-	1810.000	157284
7	1	57.5	17	-	1919.000	327993
8	2	73.2	17	1458.000	1633.000	497896
9	2	81.7	17	1080.000	1514.000	668818
10	3	98.2	17	1138.000	1112.000	135957
11	1	65.1	17	-	1406.000	307187
12	2	79.5	17	1301.000	1830.000	476874
13	2	68.8	17	1247.000	1306.000	647846
14	3	88.1	17	1541.000	1463.000	114821
15	3	97.8	17	1930.000	1396.000	284733
16	3	90.2	17	1902.000	1166.000	454680
17	1	51.9	17	-	1875.000	627438
18						
19						
20						

Trial Number:			20			Detection (Yes/No)
Number of Bursts in Trial:			16			
Chirp Center Frequency:			5526.6			Yes
Burst	Number of Pulses	Pulse Width (Microseconds)	Chirp Width (MHz)	Pulse 1-to-2 Spacing (µsec)	Pulse 2-to-3 Spacing (µsec)	Starting Location Within Interval (µsec)
1	3	97.7	14	1872	1347	99657
2	1	63.9	14	-	1483	281667
3	1	62.1	14	-	1248	463352
4	1	63.1	14	-	1903	644383
5	1	58.8	14	-	1540	77761
6	3	92.2	14	1878	1939	257841
7	2	77.5	14	1590	1302	440015
8	1	62.7	14	-	1948	621997
9	2	68.7	14	1194	1517	55315
10	1	57.2	14	-	1997	236782
11	2	77.4	14	1784	1625	417407
12	3	85.5	14	1724	1759	597437
13	2	71.6	14	1554	1999	32953
14	1	62.3	14	-	1732	214512
15	3	89	14	1460	1812	394407
16	2	82.6	14	1962	1660	576010
17						
18						
19						
20						

DFS Radar Parameters
FCC Radar Type 5
Channel 106 Bandwidth 20MHz

Trial Number:			21			Detection (Yes/No)
Number of Bursts in Trial:			15			
Chirp Center Frequency:			5533.8			Yes
Burst	Number of Pulses	Pulse Width (Microseconds)	Chirp Width (MHz)	Pulse 1-to-2 Spacing (µsec)	Pulse 2-to-3 Spacing (µsec)	Starting Location Within Interval (µsec)
1	3	84.2	13	1906	1545	11350
2	1	64.4	13	-	1961	204939
3	2	67.9	13	1226	1921	397896
4	1	61.5	13	-	1976	592028
5	1	65	13	-	1131	786406
6	3	90.3	13	1489	1846	180440
7	1	53.3	13	-	1969	374644
8	3	94.2	13	1615	1476	566414
9	3	99.7	13	1748	1094	759412
10	1	57.6	13	-	1839	157281
11	1	56.6	13	-	1837	350862
12	2	82.3	13	1652	1473	543562
13	3	98.2	13	1758	1516	735365
14	1	64.3	13	-	1389	133512
15	1	53.8	13	-	1037	327345
16						
17						
18						
19						
20						

Trial Number:			22			Detection (Yes/No)
Number of Bursts in Trial:			20			
Chirp Center Frequency:			5531.4			Yes
Burst	Number of Pulses	Pulse Width (Microseconds)	Chirp Width (MHz)	Pulse 1-to-2 Spacing (µsec)	Pulse 2-to-3 Spacing (µsec)	Starting Location Within Interval (µsec)
1	1	61.7	19	-	1213	390555
2	3	97.8	19	1413	1455	532608
3	3	91.6	19	1271	1263	81865
4	1	57.8	19	-	1036	227509
5	3	87.9	19	1220	1304	370930
6	2	78.8	19	1544	1693	516141
7	2	77.8	19	1788	1847	64069
8	2	81.1	19	1435	1083	209097
9	3	83.6	19	1813	1256	352652
10	3	92.9	19	1720	1898	497032
11	2	80.5	19	1811	1454	46281
12	1	53.6	19	-	1151	191685
13	3	95.8	19	1366	1723	334930
14	2	80.1	19	1782	1230	480666
15	3	87.7	19	1326	1182	28425
16	1	60	19	-	1737	173625
17	3	85.9	19	1977	1090	317062
18	2	76.2	19	1356	1979	462581
19	3	97	19	1508	1940	10590
20	3	84.7	19	1320	1272	155220

DFS Radar Parameters
FCC Radar Type 5
Channel 106 Bandwidth 20MHz

Trial Number:			23			Detection (Yes/No)
Number of Bursts in Trial:			11			
Chirp Center Frequency:			5535.4			Yes
Burst	Number of Pulses	Pulse Width (Microseconds)	Chirp Width (MHz)	Pulse 1-to-2 Spacing (µsec)	Pulse 2-to-3 Spacing (µsec)	Starting Location Within Interval (µsec)
1	2	73.7	9	1116	1729	547157
2	2	79.9	9	1870	1973	810303
3	2	78.7	9	1692	1057	1075031
4	3	86.9	9	1550	1364	250401
5	1	57.3	9	-	1214	515423
6	1	60.6	9	-	1644	779401
7	2	68	9	1353	1007	1042896
8	1	63.5	9	-	1831	218460
9	1	51.2	9	-	1030	482950
10	3	85.5	9	1814	1141	744899
11	3	95.3	9	1104	1680	1008928
12						
13						
14						
15						
16						
17						
18						
19						
20						

Trial Number:			24			Detection (Yes/No)
Number of Bursts in Trial:			17			
Chirp Center Frequency:			5532.6			Yes
Burst	Number of Pulses	Pulse Width (Microseconds)	Chirp Width (MHz)	Pulse 1-to-2 Spacing (µsec)	Pulse 2-to-3 Spacing (µsec)	Starting Location Within Interval (µsec)
1	1	64.5	16	-	1195	120302
2	1	54.3	16	-	1589	291048
3	1	53.3	16	-	1114	462173
4	1	65.7	16	-	1931	632368
5	3	87.8	16	1367	1690	98774
6	2	80.1	16	1240	1102	269719
7	1	54.5	16	-	1638	440791
8	1	51.1	16	-	1815	611439
9	1	53.7	16	-	1423	78173
10	1	56.3	16	-	1726	248919
11	2	83.3	16	1968	1238	418817
12	3	84.3	16	1695	1567	588294
13	2	68.6	16	1033	1688	57022
14	3	84.6	16	1450	1106	227110
15	3	86.7	16	1327	1874	396805
16	1	57.5	16	-	1920	569287
17	1	64	16	-	1803	36063
18						
19						
20						

DFS Radar Parameters
FCC Radar Type 5
Channel 106 Bandwidth 20MHz

Trial Number:			25			Detection (Yes/No)
Number of Bursts in Trial:			16			
Chirp Center Frequency:			5533			Yes
Burst	Number of Pulses	Pulse Width (Microseconds)	Chirp Width (MHz)	Pulse 1-to-2 Spacing (µsec)	Pulse 2-to-3 Spacing (µsec)	Starting Location Within Interval (µsec)
1	1	62	15	-	1883	219760
2	3	97.6	15	1077	1167	400320
3	2	70.8	15	1024	1860	581864
4	1	56.1	15	-	1601	15975
5	1	51.2	15	-	1290	197567
6	2	79.7	15	1990	1391	378094
7	2	80.1	15	1270	1361	559734
8	2	81.8	15	1706	1908	740020
9	2	69	15	1407	1262	174877
10	1	54.6	15	-	1392	356737
11	1	50.4	15	-	1412	538284
12	2	77.2	15	1832	1718	717784
13	1	60.7	15	-	1998	152688
14	1	64.3	15	-	1015	334541
15	2	79.9	15	1219	1480	515033
16	3	98.1	15	1716	1774	693816
17						
18						
19						
20						

Trial Number:			26			Detection (Yes/No)
Number of Bursts in Trial:			15			
Chirp Center Frequency:			5533.4			Yes
Burst	Number of Pulses	Pulse Width (Microseconds)	Chirp Width (MHz)	Pulse 1-to-2 Spacing (µsec)	Pulse 2-to-3 Spacing (µsec)	Starting Location Within Interval (µsec)
1	3	97.7	14	1705	1314	138675
2	1	65.9	14	-	1048	332991
3	3	99.3	14	1465	1630	524723
4	3	92.4	14	1641	1744	717375
5	1	64.4	14	-	1506	115286
6	3	99.9	14	1076	1484	307804
7	2	80	14	1504	1518	501652
8	2	81.3	14	1093	1700	695144
9	2	75	14	1444	1852	91227
10	3	93.2	14	1988	1585	283689
11	2	78.3	14	1315	1063	478229
12	3	90.4	14	1098	1096	670680
13	3	95.7	14	1636	1749	67308
14	1	60.1	14	-	1499	261239
15	1	52.3	14	-	1440	454935
16						
17						
18						
19						
20						

DFS Radar Parameters
FCC Radar Type 5
Channel 106 Bandwidth 20MHz

Trial Number:			27			Detection (Yes/No)
Number of Bursts in Trial:			9			
Chirp Center Frequency:			5536.2			Yes
Burst	Number of Pulses	Pulse Width (Microseconds)	Chirp Width (MHz)	Pulse 1-to-2 Spacing (µsec)	Pulse 2-to-3 Spacing (µsec)	Starting Location Within Interval (µsec)
1	2	70.7	7	1964	1676	1080011
2	1	53.1	7	-	1351	72934
3	1	54	7	-	1462	395949
4	1	51.4	7	-	1019	719209
5	1	53.6	7	-	1297	1042120
6	1	64.7	7	-	1429	33140
7	3	89.2	7	1134	1284	355428
8	1	63.3	7	-	1409	679208
9	2	74.7	7	1686	1605	1000826
10						
11						
12						
13						
14						
15						
16						
17						
18						
19						
20						

Trial Number:			28			Detection (Yes/No)
Number of Bursts in Trial:			10			
Chirp Center Frequency:			5535.8			Yes
Burst	Number of Pulses	Pulse Width (Microseconds)	Chirp Width (MHz)	Pulse 1-to-2 Spacing (µsec)	Pulse 2-to-3 Spacing (µsec)	Starting Location Within Interval (µsec)
1	2	73.3	8	1006	1871	1191147
2	3	83.9	8	1624	1891	283890
3	2	68.8	8	1881	1576	574425
4	2	75.4	8	1020	1286	865457
5	1	54.1	8	-	1428	1156782
6	2	74	8	1626	1025	248647
7	3	93.1	8	1325	1708	538124
8	3	92	8	1344	1775	828254
9	1	53.4	8	-	1408	1120994
10	3	86.2	8	1971	1573	212364
11						
12						
13						
14						
15						
16						
17						
18						
19						
20						

DFS Radar Parameters
FCC Radar Type 5
Channel 106 Bandwidth 20MHz

Trial Number:			29			Detection (Yes/No)
Number of Bursts in Trial:			10			
Chirp Center Frequency:			5536.2			Yes
Burst	Number of Pulses	Pulse Width (Microseconds)	Chirp Width (MHz)	Pulse 1-to-2 Spacing (µsec)	Pulse 2-to-3 Spacing (µsec)	Starting Location Within Interval (µsec)
1	2	70.9	7	1001	1498	503336
2	2	68.7	7	1560	1099	793662
3	3	87.4	7	1500	1817	1081855
4	1	65.2	7	-	1222	177319
5	3	99.6	7	1157	1588	467055
6	1	62.1	7	-	1464	758649
7	2	67.6	7	1018	1216	1048657
8	3	89.6	7	1372	1330	141212
9	2	81.1	7	1596	1175	431689
10	1	58	7	-	1236	722980
11						
12						
13						
14						
15						
16						
17						
18						
19						
20						

Trial Number:			30			Detection (Yes/No)
Number of Bursts in Trial:			20			
Chirp Center Frequency:			5531			Yes
Burst	Number of Pulses	Pulse Width (Microseconds)	Chirp Width (MHz)	Pulse 1-to-2 Spacing (µsec)	Pulse 2-to-3 Spacing (µsec)	Starting Location Within Interval (µsec)
1	1	51.4	20	-	1609	506021
2	3	89.7	20	1897	1280	52498
3	3	86.2	20	1794	1855	196772
4	1	58.9	20	-	1581	343032
5	1	52.3	20	-	1809	487982
6	2	79.7	20	1202	1826	34800
7	2	74.1	20	1804	1796	179412
8	1	56.7	20	-	1960	324949
9	1	62.8	20	-	1448	470395
10	2	76.2	20	1323	1777	16963
11	3	83.4	20	1288	1461	161353
12	1	58.5	20	-	1785	307173
13	1	52.5	20	-	1481	452488
14	2	74.6	20	1719	1471	595942
15	2	69.1	20	1294	1943	143865
16	2	80.5	20	1713	1492	288615
17	2	81.1	20	1026	1526	433830
18	1	54.5	20	-	1893	579369
19	2	77.1	20	1108	1355	126201
20	1	51	20	-	1772	271436

Channel 106 Bandwidth 30MHz

Report Number : FZ561115-04A

DFS Radar Parameters
FCC Radar Type 1
Channel 106 Bandwidth 30MHz

Trial #	Pulse Repetition Frequency Number (1 to 23)	Pulse Repetition Frequency (Pulses Per Second)	Pulse Repetition Interval (Microseconds)	Detection (Yes / No)
1	3	1792.11	558	Y
2	12	326.16	3066	Y
3	21	1089.32	918	Y
4	13	1319.26	758	Y
5	10	1432.66	698	Y
6	14	1285.35	778	Y
7	4	1730.10	578	Y
8	7	1567.40	638	Y
9	20	1113.59	898	Y
10	6	1618.12	618	Y
11	5	1672.24	598	Y
12	18	1165.50	858	Y
13	17	1193.32	838	Y
14	1	1930.50	518	Y
15	15	1253.13	798	Y
16		364.56	2743	Y
17		1267.43	789	Y
18		396.67	2521	Y
19		611.62	1635	Y
20		827.13	1209	Y
21		545.85	1832	Y
22		603.14	1658	Y
23		598.80	1670	Y
24		617.67	1619	Y
25		1785.71	560	Y
26		505.82	1977	Y
27		677.05	1477	Y
28		734.75	1361	Y
29		416.49	2401	Y
30		462.96	2160	Y

Report Number : FZ561115-04A

DFS Radar Parameters
FCC Radar Type 2
Channel 106 Bandwidth 30MHz

Trial #	Number Pulses per Burst	Pulse Width (Microseconds)	Pulse Repetition Interval (Microseconds)	Detection (Yes / No)
1	28	4.40	162	Y
2	28	4.00	187	Y
3	24	1.70	205	Y
4	25	2.60	178	Y
5	23	1.40	218	Y
6	28	4.40	221	Y
7	23	1.30	166	Y
8	28	4.30	159	Y
9	23	1.40	201	Y
10	29	4.90	152	Y
11	24	2.00	195	Y
12	24	1.70	211	Y
13	26	2.90	151	Y
14	23	1.30	207	Y
15	23	1.50	161	Y
16	28	4.20	223	Y
17	26	3.00	180	Y
18	28	3.90	158	Y
19	28	4.10	208	Y
20	27	3.50	198	Y
21	26	3.20	214	Y
22	29	4.80	156	Y
23	25	2.20	202	Y
24	28	4.00	228	Y
25	27	3.80	150	Y
26	27	3.40	190	Y
27	23	1.50	200	Y
28	24	1.80	210	Y
29	24	1.70	197	Y
30	29	5.00	193	Y

DFS Radar Parameters
FCC Radar Type 3
Channel 106 Bandwidth 30MHz

Trial #	Number Pulses per Burst	Pulse Width (Microseconds)	Pulse Repetition Interval (Microseconds)	Detection (Yes / No)
1	18	9.40	250	Y
2	18	9.00	262	Y
3	16	6.70	282	Y
4	17	7.60	419	Y
5	16	6.40	469	Y
6	18	9.40	209	Y
7	16	6.30	268	Y
8	18	9.30	378	Y
9	16	6.40	230	Y
10	18	9.90	257	Y
11	16	7.00	479	Y
12	16	6.70	286	Y
13	17	7.90	433	Y
14	16	6.30	244	Y
15	16	6.50	204	Y
16	18	9.20	369	Y
17	17	8.00	271	Y
18	18	8.90	458	Y
19	18	9.10	267	Y
20	17	8.50	461	Y
21	17	8.20	355	Y
22	18	9.80	329	Y
23	16	7.20	444	Y
24	18	9.00	394	Y
25	18	8.80	440	Y
26	17	8.40	462	Y
27	16	6.50	281	Y
28	16	6.80	298	Y
29	16	6.70	482	Y
30	18	10.00	345	Y

DFS Radar Parameters
FCC Radar Type 4
Channel 106 Bandwidth 30MHz

Trial #	Number Pulses per Burst	Pulse Width (Microseconds)	Pulse Repetition Interval (Microseconds)	Detection (Yes / No)
1	16	18.50	250	Y
2	15	17.80	262	Y
3	12	12.70	282	Y
4	14	14.70	419	Y
5	12	11.80	469	Y
6	16	18.50	209	Y
7	12	11.70	268	Y
8	16	18.40	378	Y
9	12	11.90	230	Y
10	16	19.70	257	Y
11	13	13.30	479	Y
12	12	12.60	286	Y
13	14	15.20	433	Y
14	12	11.80	244	Y
15	12	12.10	204	Y
16	16	18.20	369	Y
17	14	15.60	271	Y
18	15	17.50	458	Y
19	15	17.90	267	Y
20	15	16.60	461	Y
21	14	16.00	355	Y
22	16	19.40	329	Y
23	13	13.70	444	Y
24	15	17.70	394	Y
25	15	17.20	440	Y
26	14	16.30	462	Y
27	12	12.20	281	Y
28	12	12.70	298	Y
29	12	12.60	482	Y
30	16	19.80	345	Y

DFS Radar Parameters
FCC Radar Type 5
Channel 106 Bandwidth 30MHz

Trial Number:			1			Detection (Yes/No)
Number of Bursts in Trial:			18			
Chirp Center Frequency:			5530			Yes
Burst	Number of Pulses	Pulse Width (Microseconds)	Chirp Width (MHz)	Pulse 1-to-2 Spacing (µsec)	Pulse 2-to-3 Spacing (µsec)	Starting Location Within Interval (µsec)
1	3	91.7	18	1598	1174	50049
2	3	87.6	18	1731	1799	210603
3	1	59.6	18	-	1250	373075
4	2	70.6	18	1972	1378	532773
5	1	54.9	18	-	1143	30432
6	3	91.7	18	1295	1603	190978
7	1	54.2	18	-	1793	352908
8	3	90.9	18	1146	1318	512779
9	1	55.3	18	-	1513	10544
10	3	98.2	18	1765	1848	170951
11	1	62.8	18	-	1349	333267
12	1	59	18	-	1393	494595
13	2	73.6	18	1438	1892	654035
14	1	54.5	18	-	1208	152063
15	1	56.2	18	-	1232	313447
16	3	90.1	18	1780	1687	471928
17	2	75.4	18	1086	1055	635355
18	3	85.8	18	1717	1161	131596
19						
20						

Trial Number:			2			Detection (Yes/No)
Number of Bursts in Trial:			17			
Chirp Center Frequency:			5530			Yes
Burst	Number of Pulses	Pulse Width (Microseconds)	Chirp Width (MHz)	Pulse 1-to-2 Spacing (µsec)	Pulse 2-to-3 Spacing (µsec)	Starting Location Within Interval (µsec)
1	3	88.5	17	1292	1124	309787
2	2	81.1	17	1965	1254	480409
3	2	77.7	17	1944	1527	650594
4	3	96.7	17	1176	1394	118400
5	1	65.3	17	-	1760	289600
6	3	86.9	17	1993	1707	458057
7	3	84.2	17	1107	1316	629583
8	2	79.5	17	1229	1205	97699
9	1	56.9	17	-	1614	268620
10	1	59.8	17	-	1776	439327
11	1	58.8	17	-	1907	609981
12	3	98.9	17	1385	1818	76481
13	2	75.7	17	1578	1770	246971
14	2	70.3	17	1329	1081	417915
15	3	92.5	17	1022	1031	587301
16	2	69	17	1556	1305	55635
17	2	68.8	17	1183	1752	226116
18						
19						
20						

DFS Radar Parameters
FCC Radar Type 5
Channel 106 Bandwidth 30MHz

Trial Number:			3			Detection (Yes/No)
Number of Bursts in Trial:			10			
Chirp Center Frequency:			5530			Yes
Burst	Number of Pulses	Pulse Width (Microseconds)	Chirp Width (MHz)	Pulse 1-to-2 Spacing (µsec)	Pulse 2-to-3 Spacing (µsec)	Starting Location Within Interval (µsec)
1	1	52.8	8	-	1386	676257
2	2	71.8	8	1950	1119	965601
3	1	51.5	8	-	1044	59063
4	2	75.9	8	1967	1309	349197
5	3	83.7	8	1133	1273	639336
6	2	81.3	8	1909	1741	929393
7	1	54.5	8	-	1307	23240
8	3	94.4	8	1148	1335	313147
9	2	77.7	8	1640	1434	603790
10	2	78.7	8	1580	1703	893927
11						
12						
13						
14						
15						
16						
17						
18						
19						
20						

Trial Number:			4			Detection (Yes/No)
Number of Bursts in Trial:			13			
Chirp Center Frequency:			5530			Yes
Burst	Number of Pulses	Pulse Width (Microseconds)	Chirp Width (MHz)	Pulse 1-to-2 Spacing (µsec)	Pulse 2-to-3 Spacing (µsec)	Starting Location Within Interval (µsec)
1	1	55	11	-	1439	911974
2	1	55.1	11	-	1427	213865
3	2	68.9	11	1863	1069	436679
4	1	55.1	11	-	1100	661157
5	2	70.7	11	1738	1691	882531
6	2	70.3	11	1941	1135	185997
7	1	52.7	11	-	1819	409686
8	2	79.7	11	1694	1926	631882
9	3	96.4	11	1281	1339	854349
10	3	86.7	11	1851	1510	158145
11	3	95	11	1277	1505	381337
12	2	72.3	11	1027	1924	604854
13	2	72.7	11	1127	1951	827899
14						
15						
16						
17						
18						
19						
20						

DFS Radar Parameters
FCC Radar Type 5
Channel 106 Bandwidth 30MHz

Trial Number:			5			Detection (Yes/No)
Number of Bursts in Trial:			9			
Chirp Center Frequency:			5530			Yes
Burst	Number of Pulses	Pulse Width (Microseconds)	Chirp Width (MHz)	Pulse 1-to-2 Spacing (µsec)	Pulse 2-to-3 Spacing (µsec)	Starting Location Within Interval (µsec)
1	3	86.4	6	1873	1894	189193
2	2	75.4	6	1276	1049	512377
3	3	84.8	6	1682	1059	834157
4	3	94.5	6	1209	1405	1156411
5	2	82	6	1697	1251	149732
6	1	56.5	6	-	1343	472962
7	2	72.5	6	1451	1383	795121
8	3	92.6	6	1869	1249	1116425
9	1	66.6	6	-	1177	110134
10						
11						
12						
13						
14						
15						
16						
17						
18						
19						
20						

Trial Number:			6			Detection (Yes/No)
Number of Bursts in Trial:			18			
Chirp Center Frequency:			5530			Yes
Burst	Number of Pulses	Pulse Width (Microseconds)	Chirp Width (MHz)	Pulse 1-to-2 Spacing (µsec)	Pulse 2-to-3 Spacing (µsec)	Starting Location Within Interval (µsec)
1	1	54.5	18	-	1791	216221
2	3	85.8	18	1582	1103	376357
3	1	53.4	18	-	1415	539032
4	2	68.2	18	1147	1398	35065
5	2	73.9	18	1663	1087	196075
6	1	59.9	18	-	1995	357502
7	1	54.7	18	-	1864	518808
8	3	99.9	18	1068	1243	15187
9	2	73.1	18	1635	1650	176099
10	1	52.3	18	-	1659	337816
11	3	87.7	18	1358	1595	496898
12	1	58.2	18	-	1577	660468
13	2	79.2	18	1507	1043	156454
14	2	74.4	18	1587	1901	317075
15	3	88	18	1646	1834	477028
16	1	54.6	18	-	1955	640235
17	3	88.1	18	1949	1531	136139
18	2	78.5	18	1986	1199	297399
19						
20						

DFS Radar Parameters
FCC Radar Type 5
Channel 106 Bandwidth 30MHz

Trial Number:			7			Detection (Yes/No)
Number of Bursts in Trial:			9			
Chirp Center Frequency:			5530			Yes
Burst	Number of Pulses	Pulse Width (Microseconds)	Chirp Width (MHz)	Pulse 1-to-2 Spacing (µsec)	Pulse 2-to-3 Spacing (µsec)	Starting Location Within Interval (µsec)
1	2	72.9	6	1631	1267	919026
2	3	90.7	6	1801	1571	1239822
3	3	96.2	6	1261	1675	233653
4	2	82.4	6	1575	1073	556712
5	2	73.8	6	1592	1735	878996
6	2	80.6	6	1021	1362	1202418
7	3	99.2	6	1402	1821	193919
8	1	65.1	6	-	1539	517390
9	1	50.4	6	-	1823	840212
10						
11						
12						
13						
14						
15						
16						
17						
18						
19						
20						

Trial Number:			8			Detection (Yes/No)
Number of Bursts in Trial:			18			
Chirp Center Frequency:			5530			Yes
Burst	Number of Pulses	Pulse Width (Microseconds)	Chirp Width (MHz)	Pulse 1-to-2 Spacing (µsec)	Pulse 2-to-3 Spacing (µsec)	Starting Location Within Interval (µsec)
1	3	98.9	18	1568	1769	578194
2	3	86.9	18	1604	1040	76884
3	2	72.5	18	1497	1121	238139
4	3	87.9	18	1651	1956	397608
5	1	55.1	18	-	1129	561501
6	3	86.1	18	1843	1767	57073
7	3	88.4	18	1246	1370	217779
8	1	50.6	18	-	1259	380130
9	2	83.2	18	1425	1164	540430
10	1	51.7	18	-	1616	37467
11	1	52.5	18	-	1404	198826
12	3	96.5	18	1381	1763	358564
13	3	92.9	18	1410	1673	519094
14	2	74.9	18	1820	1753	17547
15	3	96.6	18	1128	1768	178179
16	1	63.5	18	-	1496	340252
17	3	92.7	18	1549	1324	499451
18	3	84.6	18	1032	1257	660696
19						
20						

DFS Radar Parameters
FCC Radar Type 5
Channel 106 Bandwidth 30MHz

Trial Number:			9			Detection (Yes/No)
Number of Bursts in Trial:			9			
Chirp Center Frequency:			5530			Yes
Burst	Number of Pulses	Pulse Width (Microseconds)	Chirp Width (MHz)	Pulse 1-to-2 Spacing (µsec)	Pulse 2-to-3 Spacing (µsec)	Starting Location Within Interval (µsec)
1	1	64.4	6	-	1233	318530
2	1	57.2	6	-	1509	641474
3	1	51	6	-	1561	964446
4	3	96.8	6	1178	1740	1284875
5	3	89.8	6	1679	1532	278070
6	3	94	6	1519	1953	599941
7	2	78.1	6	1488	1546	923637
8	3	99.6	6	1564	1145	1244707
9	1	51.9	6	-	1914	238817
10						
11						
12						
13						
14						
15						
16						
17						
18						
19						
20						

Trial Number:			10			Detection (Yes/No)
Number of Bursts in Trial:			20			
Chirp Center Frequency:			5530			Yes
Burst	Number of Pulses	Pulse Width (Microseconds)	Chirp Width (MHz)	Pulse 1-to-2 Spacing (µsec)	Pulse 2-to-3 Spacing (µsec)	Starting Location Within Interval (µsec)
1	2	70.5	20	1046	1800	251940
2	2	72.2	20	1189	1952	396573
3	1	61.9	20	-	1255	543041
4	2	72.9	20	1258	1132	89340
5	2	69	20	1171	1669	234103
6	1	58.7	20	-	1602	379719
7	1	59.4	20	-	1672	524788
8	1	55.9	20	-	1186	71631
9	1	62.9	20	-	1494	216751
10	1	50.6	20	-	1841	361698
11	1	64.4	20	-	1521	507041
12	2	82.5	20	1377	1712	53571
13	2	72.2	20	1359	1702	198350
14	3	90.8	20	1671	1185	342601
15	2	73.7	20	1942	1097	487921
16	1	54.8	20	-	1123	35857
17	1	52.9	20	-	1880	180874
18	3	85.6	20	1054	1110	324882
19	2	82.1	20	1010	1245	470705
20	2	80.1	20	1052	1446	17924

DFS Radar Parameters
FCC Radar Type 5
Channel 106 Bandwidth 30MHz

Trial Number:			11			Detection (Yes/No)
Number of Bursts in Trial:			11			
Chirp Center Frequency:			5520.6			Yes
Burst	Number of Pulses	Pulse Width (Microseconds)	Chirp Width (MHz)	Pulse 1-to-2 Spacing (µsec)	Pulse 2-to-3 Spacing (µsec)	Starting Location Within Interval (µsec)
1	1	65.8	9	-	1649	296856
2	3	99.7	9	1296	1572	559614
3	2	68.8	9	1101	1983	824129
4	2	81.2	9	1867	1149	135
5	3	96	9	1482	1755	263597
6	3	84.7	9	1411	1963	526731
7	1	57.9	9	-	1886	792503
8	3	99.5	9	1348	1060	1054943
9	1	52.1	9	-	1647	231775
10	3	97.2	9	1538	1689	494560
11	2	78.6	9	1221	1628	759297
12						
13						
14						
15						
16						
17						
18						
19						
20						

Trial Number:			12			Detection (Yes/No)
Number of Bursts in Trial:			10			
Chirp Center Frequency:			5519.8			Yes
Burst	Number of Pulses	Pulse Width (Microseconds)	Chirp Width (MHz)	Pulse 1-to-2 Spacing (µsec)	Pulse 2-to-3 Spacing (µsec)	Starting Location Within Interval (µsec)
1	1	59.7	7	-	1806	1126753
2	1	55.5	7	-	1201	219269
3	3	84.2	7	1982	1779	508390
4	2	67.9	7	1529	1172	799760
5	2	78.4	7	1468	1449	1089946
6	2	71.2	7	1279	1936	183147
7	2	78.8	7	1118	1887	473489
8	3	83.5	7	1829	1957	762178
9	3	87.7	7	1790	1959	1052234
10	3	83.5	7	1678	1282	147263
11						
12						
13						
14						
15						
16						
17						
18						
19						
20						

DFS Radar Parameters
FCC Radar Type 5
Channel 106 Bandwidth 30MHz

Trial Number:			13			Detection (Yes/No)
Number of Bursts in Trial:			14			
Chirp Center Frequency:			5521.8			Yes
Burst	Number of Pulses	Pulse Width (Microseconds)	Chirp Width (MHz)	Pulse 1-to-2 Spacing (µsec)	Pulse 2-to-3 Spacing (µsec)	Starting Location Within Interval (µsec)
1	2	68.9	12	1184	1170	312588
2	3	83.6	12	1431	1217	519111
3	1	62.8	12	-	1191	728204
4	2	78.2	12	1179	1664	79693
5	1	52	12	-	1599	287305
6	3	92.3	12	1743	1459	493101
7	1	66.5	12	-	1291	702550
8	2	77.3	12	1938	1627	54125
9	3	91.9	12	1403	1062	261083
10	3	86.8	12	1016	1384	468140
11	1	58.3	12	-	1017	677199
12	3	96	12	1882	1709	28560
13	2	69.5	12	1742	1512	235731
14	3	86.1	12	1486	1754	442208
15						
16						
17						
18						
19						
20						

Trial Number:			14			Detection (Yes/No)
Number of Bursts in Trial:			9			
Chirp Center Frequency:			5519.4			Yes
Burst	Number of Pulses	Pulse Width (Microseconds)	Chirp Width (MHz)	Pulse 1-to-2 Spacing (µsec)	Pulse 2-to-3 Spacing (µsec)	Starting Location Within Interval (µsec)
1	2	70.9	6	1947	1639	1012111
2	1	53.4	6	-	1992	4874
3	2	80.8	6	1798	1014	327564
4	2	77	6	1622	1534	650090
5	3	84.4	6	1583	1890	971263
6	1	50.8	6	-	1042	1297368
7	1	60	6	-	1730	288050
8	1	53.7	6	-	1747	610998
9	1	65.8	6	-	1991	933779
10						
11						
12						
13						
14						
15						
16						
17						
18						
19						
20						

DFS Radar Parameters
FCC Radar Type 5
Channel 106 Bandwidth 30MHz

Trial Number:			15			Detection (Yes/No)
Number of Bursts in Trial:			9			
Chirp Center Frequency:			5519.8			Yes
Burst	Number of Pulses	Pulse Width (Microseconds)	Chirp Width (MHz)	Pulse 1-to-2 Spacing (µsec)	Pulse 2-to-3 Spacing (µsec)	Starting Location Within Interval (µsec)
1	2	72	7	1397	1095	1256198
2	1	54.6	7	-	1034	248399
3	2	77	7	1012	1457	570908
4	3	88	7	1781	1313	892178
5	2	72.8	7	1827	1594	1215591
6	3	95.4	7	1842	1352	208028
7	3	83.7	7	1196	1751	530298
8	2	74.2	7	1340	1530	853669
9	1	52	7	-	1039	1177967
10						
11						
12						
13						
14						
15						
16						
17						
18						
19						
20						

Trial Number:			16			Detection (Yes/No)
Number of Bursts in Trial:			18			
Chirp Center Frequency:			5523.8			Yes
Burst	Number of Pulses	Pulse Width (Microseconds)	Chirp Width (MHz)	Pulse 1-to-2 Spacing (µsec)	Pulse 2-to-3 Spacing (µsec)	Starting Location Within Interval (µsec)
1	3	94.4	17	1866	1915	83857
2	3	96.7	17	1215	1833	244340
3	3	96.9	17	1470	1490	405152
4	1	66	17	-	1764	568020
5	1	55.9	17	-	1350	64417
6	1	53	17	-	1390	225763
7	3	93.9	17	1562	1569	385114
8	3	92.4	17	1917	1975	545554
9	3	91.4	17	1342	1896	44293
10	2	72.1	17	1061	1996	205373
11	1	60.2	17	-	1160	367366
12	1	60.3	17	-	1987	528116
13	2	70.2	17	1495	1773	24594
14	1	63.8	17	-	1970	185852
15	3	86.1	17	1756	1433	345641
16	3	98.1	17	1058	1778	506322
17	3	97.1	17	1477	1187	4769
18	2	75	17	1655	1447	165712
19						
20						

DFS Radar Parameters
FCC Radar Type 5
Channel 106 Bandwidth 30MHz

Trial Number:			17			Detection (Yes/No)
Number of Bursts in Trial:			14			
Chirp Center Frequency:			5522.2			Yes
Burst	Number of Pulses	Pulse Width (Microseconds)	Chirp Width (MHz)	Pulse 1-to-2 Spacing (µsec)	Pulse 2-to-3 Spacing (µsec)	Starting Location Within Interval (µsec)
1	3	90.5	13	1555	1312	420017
2	1	51.8	13	-	1293	628872
3	3	99.2	13	1000	2000	833226
4	3	86.9	13	1981	1643	187282
5	2	73.4	13	1346	1725	394911
6	1	65.2	13	-	1155	603401
7	2	67.8	13	1945	1345	808983
8	3	90.9	13	1515	1928	161960
9	2	73.5	13	1072	1668	369540
10	2	75.1	13	1937	1721	576140
11	1	54.3	13	-	1802	784840
12	3	93.7	13	1478	1932	136442
13	2	81.9	13	1698	1681	343758
14	1	58.2	13	-	1311	552157
15						
16						
17						
18						
19						
20						

Trial Number:			18			Detection (Yes/No)
Number of Bursts in Trial:			17			
Chirp Center Frequency:			5523.4			Yes
Burst	Number of Pulses	Pulse Width (Microseconds)	Chirp Width (MHz)	Pulse 1-to-2 Spacing (µsec)	Pulse 2-to-3 Spacing (µsec)	Starting Location Within Interval (µsec)
1	1	62.6	16	-	1711	625094
2	1	56.2	16	-	1002	91798
3	1	51.6	16	-	1849	262438
4	2	72.9	16	1958	1341	432297
5	3	89.3	16	1139	1876	601557
6	1	54.8	16	-	1656	70675
7	3	97.5	16	1766	1795	240453
8	2	77.7	16	1140	1662	411598
9	2	83.1	16	1844	1144	581963
10	3	92	16	1710	1067	49457
11	1	59.4	16	-	1934	220347
12	3	87.9	16	1750	1152	389853
13	3	93.6	16	1674	1003	560095
14	1	55.4	16	-	1336	28611
15	1	51.8	16	-	1704	199382
16	3	90.9	16	1252	1736	368865
17	3	91	16	1469	1065	539300
18						
19						
20						

DFS Radar Parameters
FCC Radar Type 5
Channel 106 Bandwidth 30MHz

Trial Number:			19			Detection (Yes/No)
Number of Bursts in Trial:			17			
Chirp Center Frequency:			5523.8			Yes
Burst	Number of Pulses	Pulse Width (Microseconds)	Chirp Width (MHz)	Pulse 1-to-2 Spacing (µsec)	Pulse 2-to-3 Spacing (µsec)	Starting Location Within Interval (µsec)
1	3	89.9	17	1071.000	1224.000	7532
2	2	75.8	17	1159.000	1211.000	178176
3	2	70.4	17	1523.000	1430.000	348511
4	3	93.2	17	1797.000	1761.000	517537
5	2	72.3	17	1333.000	1543.000	689552
6	1	52.9	17	-	1810.000	157284
7	1	57.5	17	-	1919.000	327993
8	2	73.2	17	1458.000	1633.000	497896
9	2	81.7	17	1080.000	1514.000	668818
10	3	98.2	17	1138.000	1112.000	135957
11	1	65.1	17	-	1406.000	307187
12	2	79.5	17	1301.000	1830.000	476874
13	2	68.8	17	1247.000	1306.000	647846
14	3	88.1	17	1541.000	1463.000	114821
15	3	97.8	17	1930.000	1396.000	284733
16	3	90.2	17	1902.000	1166.000	454680
17	1	51.9	17	-	1875.000	627438
18						
19						
20						

Trial Number:			20			Detection (Yes/No)
Number of Bursts in Trial:			16			
Chirp Center Frequency:			5522.6			Yes
Burst	Number of Pulses	Pulse Width (Microseconds)	Chirp Width (MHz)	Pulse 1-to-2 Spacing (µsec)	Pulse 2-to-3 Spacing (µsec)	Starting Location Within Interval (µsec)
1	3	97.7	14	1872	1347	99657
2	1	63.9	14	-	1483	281667
3	1	62.1	14	-	1248	463352
4	1	63.1	14	-	1903	644383
5	1	58.8	14	-	1540	77761
6	3	92.2	14	1878	1939	257841
7	2	77.5	14	1590	1302	440015
8	1	62.7	14	-	1948	621997
9	2	68.7	14	1194	1517	55315
10	1	57.2	14	-	1997	236782
11	2	77.4	14	1784	1625	417407
12	3	85.5	14	1724	1759	597437
13	2	71.6	14	1554	1999	32953
14	1	62.3	14	-	1732	214512
15	3	89	14	1460	1812	394407
16	2	82.6	14	1962	1660	576010
17						
18						
19						
20						

DFS Radar Parameters
FCC Radar Type 5
Channel 106 Bandwidth 30MHz

Trial Number:			21			Detection (Yes/No)
Number of Bursts in Trial:			15			
Chirp Center Frequency:			5537.8			Yes
Burst	Number of Pulses	Pulse Width (Microseconds)	Chirp Width (MHz)	Pulse 1-to-2 Spacing (µsec)	Pulse 2-to-3 Spacing (µsec)	Starting Location Within Interval (µsec)
1	3	84.2	13	1906	1545	11350
2	1	64.4	13	-	1961	204939
3	2	67.9	13	1226	1921	397896
4	1	61.5	13	-	1976	592028
5	1	65	13	-	1131	786406
6	3	90.3	13	1489	1846	180440
7	1	53.3	13	-	1969	374644
8	3	94.2	13	1615	1476	566414
9	3	99.7	13	1748	1094	759412
10	1	57.6	13	-	1839	157281
11	1	56.6	13	-	1837	350862
12	2	82.3	13	1652	1473	543562
13	3	98.2	13	1758	1516	735365
14	1	64.3	13	-	1389	133512
15	1	53.8	13	-	1037	327345
16						
17						
18						
19						
20						

Trial Number:			22			Detection (Yes/No)
Number of Bursts in Trial:			20			
Chirp Center Frequency:			5535.4			Yes
Burst	Number of Pulses	Pulse Width (Microseconds)	Chirp Width (MHz)	Pulse 1-to-2 Spacing (µsec)	Pulse 2-to-3 Spacing (µsec)	Starting Location Within Interval (µsec)
1	1	61.7	19	-	1213	390555
2	3	97.8	19	1413	1455	532608
3	3	91.6	19	1271	1263	81865
4	1	57.8	19	-	1036	227509
5	3	87.9	19	1220	1304	370930
6	2	78.8	19	1544	1693	516141
7	2	77.8	19	1788	1847	64069
8	2	81.1	19	1435	1083	209097
9	3	83.6	19	1813	1256	352652
10	3	92.9	19	1720	1898	497032
11	2	80.5	19	1811	1454	46281
12	1	53.6	19	-	1151	191685
13	3	95.8	19	1366	1723	334930
14	2	80.1	19	1782	1230	480666
15	3	87.7	19	1326	1182	28425
16	1	60	19	-	1737	173625
17	3	85.9	19	1977	1090	317062
18	2	76.2	19	1356	1979	462581
19	3	97	19	1508	1940	10590
20	3	84.7	19	1320	1272	155220

DFS Radar Parameters
FCC Radar Type 5
Channel 106 Bandwidth 30MHz

Trial Number:			23			Detection (Yes/No)
Number of Bursts in Trial:			11			
Chirp Center Frequency:			5539.4			Yes
Burst	Number of Pulses	Pulse Width (Microseconds)	Chirp Width (MHz)	Pulse 1-to-2 Spacing (µsec)	Pulse 2-to-3 Spacing (µsec)	Starting Location Within Interval (µsec)
1	2	73.7	9	1116	1729	547157
2	2	79.9	9	1870	1973	810303
3	2	78.7	9	1692	1057	1075031
4	3	86.9	9	1550	1364	250401
5	1	57.3	9	-	1214	515423
6	1	60.6	9	-	1644	779401
7	2	68	9	1353	1007	1042896
8	1	63.5	9	-	1831	218460
9	1	51.2	9	-	1030	482950
10	3	85.5	9	1814	1141	744899
11	3	95.3	9	1104	1680	1008928
12						
13						
14						
15						
16						
17						
18						
19						
20						

Trial Number:			24			Detection (Yes/No)
Number of Bursts in Trial:			17			
Chirp Center Frequency:			5536.6			Yes
Burst	Number of Pulses	Pulse Width (Microseconds)	Chirp Width (MHz)	Pulse 1-to-2 Spacing (µsec)	Pulse 2-to-3 Spacing (µsec)	Starting Location Within Interval (µsec)
1	1	64.5	16	-	1195	120302
2	1	54.3	16	-	1589	291048
3	1	53.3	16	-	1114	462173
4	1	65.7	16	-	1931	632368
5	3	87.8	16	1367	1690	98774
6	2	80.1	16	1240	1102	269719
7	1	54.5	16	-	1638	440791
8	1	51.1	16	-	1815	611439
9	1	53.7	16	-	1423	78173
10	1	56.3	16	-	1726	248919
11	2	83.3	16	1968	1238	418817
12	3	84.3	16	1695	1567	588294
13	2	68.6	16	1033	1688	57022
14	3	84.6	16	1450	1106	227110
15	3	86.7	16	1327	1874	396805
16	1	57.5	16	-	1920	569287
17	1	64	16	-	1803	36063
18						
19						
20						

DFS Radar Parameters
FCC Radar Type 5
Channel 106 Bandwidth 30MHz

Trial Number:			25			Detection (Yes/No)
Number of Bursts in Trial:			16			
Chirp Center Frequency:			5537			Yes
Burst	Number of Pulses	Pulse Width (Microseconds)	Chirp Width (MHz)	Pulse 1-to-2 Spacing (µsec)	Pulse 2-to-3 Spacing (µsec)	Starting Location Within Interval (µsec)
1	1	62	15	-	1883	219760
2	3	97.6	15	1077	1167	400320
3	2	70.8	15	1024	1860	581864
4	1	56.1	15	-	1601	15975
5	1	51.2	15	-	1290	197567
6	2	79.7	15	1990	1391	378094
7	2	80.1	15	1270	1361	559734
8	2	81.8	15	1706	1908	740020
9	2	69	15	1407	1262	174877
10	1	54.6	15	-	1392	356737
11	1	50.4	15	-	1412	538284
12	2	77.2	15	1832	1718	717784
13	1	60.7	15	-	1998	152688
14	1	64.3	15	-	1015	334541
15	2	79.9	15	1219	1480	515033
16	3	98.1	15	1716	1774	693816
17						
18						
19						
20						

Trial Number:			26			Detection (Yes/No)
Number of Bursts in Trial:			15			
Chirp Center Frequency:			5537.4			Yes
Burst	Number of Pulses	Pulse Width (Microseconds)	Chirp Width (MHz)	Pulse 1-to-2 Spacing (µsec)	Pulse 2-to-3 Spacing (µsec)	Starting Location Within Interval (µsec)
1	3	97.7	14	1705	1314	138675
2	1	65.9	14	-	1048	332991
3	3	99.3	14	1465	1630	524723
4	3	92.4	14	1641	1744	717375
5	1	64.4	14	-	1506	115286
6	3	99.9	14	1076	1484	307804
7	2	80	14	1504	1518	501652
8	2	81.3	14	1093	1700	695144
9	2	75	14	1444	1852	91227
10	3	93.2	14	1988	1585	283689
11	2	78.3	14	1315	1063	478229
12	3	90.4	14	1098	1096	670680
13	3	95.7	14	1636	1749	67308
14	1	60.1	14	-	1499	261239
15	1	52.3	14	-	1440	454935
16						
17						
18						
19						
20						

DFS Radar Parameters
FCC Radar Type 5
Channel 106 Bandwidth 30MHz

Trial Number:			27			Detection (Yes/No)
Number of Bursts in Trial:			9			
Chirp Center Frequency:			5540.2			Yes
Burst	Number of Pulses	Pulse Width (Microseconds)	Chirp Width (MHz)	Pulse 1-to-2 Spacing (µsec)	Pulse 2-to-3 Spacing (µsec)	Starting Location Within Interval (µsec)
1	2	70.7	7	1964	1676	1080011
2	1	53.1	7	-	1351	72934
3	1	54	7	-	1462	395949
4	1	51.4	7	-	1019	719209
5	1	53.6	7	-	1297	1042120
6	1	64.7	7	-	1429	33140
7	3	89.2	7	1134	1284	355428
8	1	63.3	7	-	1409	679208
9	2	74.7	7	1686	1605	1000826
10						
11						
12						
13						
14						
15						
16						
17						
18						
19						
20						

Trial Number:			28			Detection (Yes/No)
Number of Bursts in Trial:			10			
Chirp Center Frequency:			5539.8			Yes
Burst	Number of Pulses	Pulse Width (Microseconds)	Chirp Width (MHz)	Pulse 1-to-2 Spacing (µsec)	Pulse 2-to-3 Spacing (µsec)	Starting Location Within Interval (µsec)
1	2	73.3	8	1006	1871	1191147
2	3	83.9	8	1624	1891	283890
3	2	68.8	8	1881	1576	574425
4	2	75.4	8	1020	1286	865457
5	1	54.1	8	-	1428	1156782
6	2	74	8	1626	1025	248647
7	3	93.1	8	1325	1708	538124
8	3	92	8	1344	1775	828254
9	1	53.4	8	-	1408	1120994
10	3	86.2	8	1971	1573	212364
11						
12						
13						
14						
15						
16						
17						
18						
19						
20						

DFS Radar Parameters
FCC Radar Type 5
Channel 106 Bandwidth 30MHz

Trial Number:			29			Detection (Yes/No)
Number of Bursts in Trial:			10			
Chirp Center Frequency:			5540.2			Yes
Burst	Number of Pulses	Pulse Width (Microseconds)	Chirp Width (MHz)	Pulse 1-to-2 Spacing (µsec)	Pulse 2-to-3 Spacing (µsec)	Starting Location Within Interval (µsec)
1	2	70.9	7	1001	1498	503336
2	2	68.7	7	1560	1099	793662
3	3	87.4	7	1500	1817	1081855
4	1	65.2	7	-	1222	177319
5	3	99.6	7	1157	1588	467055
6	1	62.1	7	-	1464	758649
7	2	67.6	7	1018	1216	1048657
8	3	89.6	7	1372	1330	141212
9	2	81.1	7	1596	1175	431689
10	1	58	7	-	1236	722980
11						
12						
13						
14						
15						
16						
17						
18						
19						
20						

Trial Number:			30			Detection (Yes/No)
Number of Bursts in Trial:			20			
Chirp Center Frequency:			5535			Yes
Burst	Number of Pulses	Pulse Width (Microseconds)	Chirp Width (MHz)	Pulse 1-to-2 Spacing (µsec)	Pulse 2-to-3 Spacing (µsec)	Starting Location Within Interval (µsec)
1	1	51.4	20	-	1609	506021
2	3	89.7	20	1897	1280	52498
3	3	86.2	20	1794	1855	196772
4	1	58.9	20	-	1581	343032
5	1	52.3	20	-	1809	487982
6	2	79.7	20	1202	1826	34800
7	2	74.1	20	1804	1796	179412
8	1	56.7	20	-	1960	324949
9	1	62.8	20	-	1448	470395
10	2	76.2	20	1323	1777	16963
11	3	83.4	20	1288	1461	161353
12	1	58.5	20	-	1785	307173
13	1	52.5	20	-	1481	452488
14	2	74.6	20	1719	1471	595942
15	2	69.1	20	1294	1943	143865
16	2	80.5	20	1713	1492	288615
17	2	81.1	20	1026	1526	433830
18	1	54.5	20	-	1893	579369
19	2	77.1	20	1108	1355	126201
20	1	51	20	-	1772	271436

Channel 106 Bandwidth 40MHz

Report Number : FZ561115-04A

DFS Radar Parameters
FCC Radar Type 1
Channel 106 Bandwidth 40MHz

Trial #	Pulse Repetition Frequency Number (1 to 23)	Pulse Repetition Frequency (Pulses Per Second)	Pulse Repetition Interval (Microseconds)	Detection (Yes / No)
1	3	1792.11	558	Y
2	12	326.16	3066	Y
3	21	1089.32	918	Y
4	13	1319.26	758	Y
5	10	1432.66	698	Y
6	14	1285.35	778	Y
7	4	1730.10	578	Y
8	7	1567.40	638	Y
9	20	1113.59	898	Y
10	6	1618.12	618	Y
11	5	1672.24	598	Y
12	18	1165.50	858	Y
13	17	1193.32	838	Y
14	1	1930.50	518	Y
15	15	1253.13	798	Y
16		364.56	2743	Y
17		1267.43	789	Y
18		396.67	2521	Y
19		611.62	1635	Y
20		827.13	1209	Y
21		545.85	1832	Y
22		603.14	1658	Y
23		598.80	1670	Y
24		617.67	1619	Y
25		1785.71	560	Y
26		505.82	1977	Y
27		677.05	1477	Y
28		734.75	1361	Y
29		416.49	2401	Y
30		462.96	2160	Y

DFS Radar Parameters
FCC Radar Type 2
Channel 106 Bandwidth 40MHz

Trial #	Number Pulses per Burst	Pulse Width (Microseconds)	Pulse Repetition Interval (Microseconds)	Detection (Yes / No)
1	28	4.40	162	Y
2	28	4.00	187	Y
3	24	1.70	205	Y
4	25	2.60	178	Y
5	23	1.40	218	Y
6	28	4.40	221	Y
7	23	1.30	166	Y
8	28	4.30	159	Y
9	23	1.40	201	Y
10	29	4.90	152	Y
11	24	2.00	195	Y
12	24	1.70	211	Y
13	26	2.90	151	Y
14	23	1.30	207	Y
15	23	1.50	161	Y
16	28	4.20	223	Y
17	26	3.00	180	Y
18	28	3.90	158	Y
19	28	4.10	208	Y
20	27	3.50	198	Y
21	26	3.20	214	Y
22	29	4.80	156	Y
23	25	2.20	202	Y
24	28	4.00	228	Y
25	27	3.80	150	Y
26	27	3.40	190	Y
27	23	1.50	200	Y
28	24	1.80	210	Y
29	24	1.70	197	Y
30	29	5.00	193	Y

DFS Radar Parameters
FCC Radar Type 3
Channel 106 Bandwidth 40MHz

Trial #	Number Pulses per Burst	Pulse Width (Microseconds)	Pulse Repetition Interval (Microseconds)	Detection (Yes / No)
1	18	9.40	250	Y
2	18	9.00	262	Y
3	16	6.70	282	Y
4	17	7.60	419	Y
5	16	6.40	469	Y
6	18	9.40	209	Y
7	16	6.30	268	Y
8	18	9.30	378	Y
9	16	6.40	230	Y
10	18	9.90	257	Y
11	16	7.00	479	Y
12	16	6.70	286	Y
13	17	7.90	433	Y
14	16	6.30	244	Y
15	16	6.50	204	Y
16	18	9.20	369	Y
17	17	8.00	271	Y
18	18	8.90	458	Y
19	18	9.10	267	Y
20	17	8.50	461	Y
21	17	8.20	355	Y
22	18	9.80	329	Y
23	16	7.20	444	Y
24	18	9.00	394	Y
25	18	8.80	440	Y
26	17	8.40	462	Y
27	16	6.50	281	Y
28	16	6.80	298	Y
29	16	6.70	482	Y
30	18	10.00	345	Y

DFS Radar Parameters
FCC Radar Type 4
Channel 106 Bandwidth 40MHz

Trial #	Number Pulses per Burst	Pulse Width (Microseconds)	Pulse Repetition Interval (Microseconds)	Detection (Yes / No)
1	16	18.50	250	Y
2	15	17.80	262	Y
3	12	12.70	282	Y
4	14	14.70	419	Y
5	12	11.80	469	Y
6	16	18.50	209	Y
7	12	11.70	268	Y
8	16	18.40	378	Y
9	12	11.90	230	Y
10	16	19.70	257	Y
11	13	13.30	479	Y
12	12	12.60	286	Y
13	14	15.20	433	Y
14	12	11.80	244	Y
15	12	12.10	204	Y
16	16	18.20	369	Y
17	14	15.60	271	Y
18	15	17.50	458	Y
19	15	17.90	267	Y
20	15	16.60	461	Y
21	14	16.00	355	Y
22	16	19.40	329	Y
23	13	13.70	444	Y
24	15	17.70	394	Y
25	15	17.20	440	Y
26	14	16.30	462	Y
27	12	12.20	281	Y
28	12	12.70	298	Y
29	12	12.60	482	Y
30	16	19.80	345	Y

DFS Radar Parameters
FCC Radar Type 5
Channel 106 Bandwidth 40MHz

Trial Number:			1			Detection (Yes/No)
Number of Bursts in Trial:			18			
Chirp Center Frequency:			5530			No
Burst	Number of Pulses	Pulse Width (Microseconds)	Chirp Width (MHz)	Pulse 1-to-2 Spacing (µsec)	Pulse 2-to-3 Spacing (µsec)	Starting Location Within Interval (µsec)
1	3	91.7	18	1598	1174	50049
2	3	87.6	18	1731	1799	210603
3	1	59.6	18	-	1250	373075
4	2	70.6	18	1972	1378	532773
5	1	54.9	18	-	1143	30432
6	3	91.7	18	1295	1603	190978
7	1	54.2	18	-	1793	352908
8	3	90.9	18	1146	1318	512779
9	1	55.3	18	-	1513	10544
10	3	98.2	18	1765	1848	170951
11	1	62.8	18	-	1349	333267
12	1	59	18	-	1393	494595
13	2	73.6	18	1438	1892	654035
14	1	54.5	18	-	1208	152063
15	1	56.2	18	-	1232	313447
16	3	90.1	18	1780	1687	471928
17	2	75.4	18	1086	1055	635355
18	3	85.8	18	1717	1161	131596
19						
20						

Trial Number:			2			Detection (Yes/No)
Number of Bursts in Trial:			17			
Chirp Center Frequency:			5530			No
Burst	Number of Pulses	Pulse Width (Microseconds)	Chirp Width (MHz)	Pulse 1-to-2 Spacing (µsec)	Pulse 2-to-3 Spacing (µsec)	Starting Location Within Interval (µsec)
1	3	88.5	17	1292	1124	309787
2	2	81.1	17	1965	1254	480409
3	2	77.7	17	1944	1527	650594
4	3	96.7	17	1176	1394	118400
5	1	65.3	17	-	1760	289600
6	3	86.9	17	1993	1707	458057
7	3	84.2	17	1107	1316	629583
8	2	79.5	17	1229	1205	97699
9	1	56.9	17	-	1614	268620
10	1	59.8	17	-	1776	439327
11	1	58.8	17	-	1907	609981
12	3	98.9	17	1385	1818	76481
13	2	75.7	17	1578	1770	246971
14	2	70.3	17	1329	1081	417915
15	3	92.5	17	1022	1031	587301
16	2	69	17	1556	1305	55635
17	2	68.8	17	1183	1752	226116
18						
19						
20						

DFS Radar Parameters
FCC Radar Type 5
Channel 106 Bandwidth 40MHz

Trial Number:			3			Detection (Yes/No)
Number of Bursts in Trial:			10			
Chirp Center Frequency:			5530			No
Burst	Number of Pulses	Pulse Width (Microseconds)	Chirp Width (MHz)	Pulse 1-to-2 Spacing (µsec)	Pulse 2-to-3 Spacing (µsec)	Starting Location Within Interval (µsec)
1	1	52.8	8	-	1386	676257
2	2	71.8	8	1950	1119	965601
3	1	51.5	8	-	1044	59063
4	2	75.9	8	1967	1309	349197
5	3	83.7	8	1133	1273	639336
6	2	81.3	8	1909	1741	929393
7	1	54.5	8	-	1307	23240
8	3	94.4	8	1148	1335	313147
9	2	77.7	8	1640	1434	603790
10	2	78.7	8	1580	1703	893927
11						
12						
13						
14						
15						
16						
17						
18						
19						
20						

Trial Number:			4			Detection (Yes/No)
Number of Bursts in Trial:			13			
Chirp Center Frequency:			5530			No
Burst	Number of Pulses	Pulse Width (Microseconds)	Chirp Width (MHz)	Pulse 1-to-2 Spacing (µsec)	Pulse 2-to-3 Spacing (µsec)	Starting Location Within Interval (µsec)
1	1	55	11	-	1439	911974
2	1	55.1	11	-	1427	213865
3	2	68.9	11	1863	1069	436679
4	1	55.1	11	-	1100	661157
5	2	70.7	11	1738	1691	882531
6	2	70.3	11	1941	1135	185997
7	1	52.7	11	-	1819	409686
8	2	79.7	11	1694	1926	631882
9	3	96.4	11	1281	1339	854349
10	3	86.7	11	1851	1510	158145
11	3	95	11	1277	1505	381337
12	2	72.3	11	1027	1924	604854
13	2	72.7	11	1127	1951	827899
14						
15						
16						
17						
18						
19						
20						

DFS Radar Parameters
FCC Radar Type 5
Channel 106 Bandwidth 40MHz

Trial Number:			5			Detection (Yes/No)
Number of Bursts in Trial:			9			
Chirp Center Frequency:			5530			No
Burst	Number of Pulses	Pulse Width (Microseconds)	Chirp Width (MHz)	Pulse 1-to-2 Spacing (µsec)	Pulse 2-to-3 Spacing (µsec)	Starting Location Within Interval (µsec)
1	3	86.4	6	1873	1894	189193
2	2	75.4	6	1276	1049	512377
3	3	84.8	6	1682	1059	834157
4	3	94.5	6	1209	1405	1156411
5	2	82	6	1697	1251	149732
6	1	56.5	6	-	1343	472962
7	2	72.5	6	1451	1383	795121
8	3	92.6	6	1869	1249	1116425
9	1	66.6	6	-	1177	110134
10						
11						
12						
13						
14						
15						
16						
17						
18						
19						
20						

Trial Number:			6			Detection (Yes/No)
Number of Bursts in Trial:			18			
Chirp Center Frequency:			5530			No
Burst	Number of Pulses	Pulse Width (Microseconds)	Chirp Width (MHz)	Pulse 1-to-2 Spacing (µsec)	Pulse 2-to-3 Spacing (µsec)	Starting Location Within Interval (µsec)
1	1	54.5	18	-	1791	216221
2	3	85.8	18	1582	1103	376357
3	1	53.4	18	-	1415	539032
4	2	68.2	18	1147	1398	35065
5	2	73.9	18	1663	1087	196075
6	1	59.9	18	-	1995	357502
7	1	54.7	18	-	1864	518808
8	3	99.9	18	1068	1243	15187
9	2	73.1	18	1635	1650	176099
10	1	52.3	18	-	1659	337816
11	3	87.7	18	1358	1595	496898
12	1	58.2	18	-	1577	660468
13	2	79.2	18	1507	1043	156454
14	2	74.4	18	1587	1901	317075
15	3	88	18	1646	1834	477028
16	1	54.6	18	-	1955	640235
17	3	88.1	18	1949	1531	136139
18	2	78.5	18	1986	1199	297399
19						
20						

DFS Radar Parameters
FCC Radar Type 5
Channel 106 Bandwidth 40MHz

Trial Number:			7			Detection (Yes/No)
Number of Bursts in Trial:			9			
Chirp Center Frequency:			5530			No
Burst	Number of Pulses	Pulse Width (Microseconds)	Chirp Width (MHz)	Pulse 1-to-2 Spacing (µsec)	Pulse 2-to-3 Spacing (µsec)	Starting Location Within Interval (µsec)
1	2	72.9	6	1631	1267	919026
2	3	90.7	6	1801	1571	1239822
3	3	96.2	6	1261	1675	233653
4	2	82.4	6	1575	1073	556712
5	2	73.8	6	1592	1735	878996
6	2	80.6	6	1021	1362	1202418
7	3	99.2	6	1402	1821	193919
8	1	65.1	6	-	1539	517390
9	1	50.4	6	-	1823	840212
10						
11						
12						
13						
14						
15						
16						
17						
18						
19						
20						

Trial Number:			8			Detection (Yes/No)
Number of Bursts in Trial:			18			
Chirp Center Frequency:			5530			No
Burst	Number of Pulses	Pulse Width (Microseconds)	Chirp Width (MHz)	Pulse 1-to-2 Spacing (µsec)	Pulse 2-to-3 Spacing (µsec)	Starting Location Within Interval (µsec)
1	3	98.9	18	1568	1769	578194
2	3	86.9	18	1604	1040	76884
3	2	72.5	18	1497	1121	238139
4	3	87.9	18	1651	1956	397608
5	1	55.1	18	-	1129	561501
6	3	86.1	18	1843	1767	57073
7	3	88.4	18	1246	1370	217779
8	1	50.6	18	-	1259	380130
9	2	83.2	18	1425	1164	540430
10	1	51.7	18	-	1616	37467
11	1	52.5	18	-	1404	198826
12	3	96.5	18	1381	1763	358564
13	3	92.9	18	1410	1673	519094
14	2	74.9	18	1820	1753	17547
15	3	96.6	18	1128	1768	178179
16	1	63.5	18	-	1496	340252
17	3	92.7	18	1549	1324	499451
18	3	84.6	18	1032	1257	660696
19						
20						

DFS Radar Parameters
FCC Radar Type 5
Channel 106 Bandwidth 40MHz

Trial Number:			9			Detection (Yes/No)
Number of Bursts in Trial:			9			
Chirp Center Frequency:			5530			No
Burst	Number of Pulses	Pulse Width (Microseconds)	Chirp Width (MHz)	Pulse 1-to-2 Spacing (µsec)	Pulse 2-to-3 Spacing (µsec)	Starting Location Within Interval (µsec)
1	1	64.4	6	-	1233	318530
2	1	57.2	6	-	1509	641474
3	1	51	6	-	1561	964446
4	3	96.8	6	1178	1740	1284875
5	3	89.8	6	1679	1532	278070
6	3	94	6	1519	1953	599941
7	2	78.1	6	1488	1546	923637
8	3	99.6	6	1564	1145	1244707
9	1	51.9	6	-	1914	238817
10						
11						
12						
13						
14						
15						
16						
17						
18						
19						
20						

Trial Number:			10			Detection (Yes/No)
Number of Bursts in Trial:			20			
Chirp Center Frequency:			5530			No
Burst	Number of Pulses	Pulse Width (Microseconds)	Chirp Width (MHz)	Pulse 1-to-2 Spacing (µsec)	Pulse 2-to-3 Spacing (µsec)	Starting Location Within Interval (µsec)
1	2	70.5	20	1046	1800	251940
2	2	72.2	20	1189	1952	396573
3	1	61.9	20	-	1255	543041
4	2	72.9	20	1258	1132	89340
5	2	69	20	1171	1669	234103
6	1	58.7	20	-	1602	379719
7	1	59.4	20	-	1672	524788
8	1	55.9	20	-	1186	71631
9	1	62.9	20	-	1494	216751
10	1	50.6	20	-	1841	361698
11	1	64.4	20	-	1521	507041
12	2	82.5	20	1377	1712	53571
13	2	72.2	20	1359	1702	198350
14	3	90.8	20	1671	1185	342601
15	2	73.7	20	1942	1097	487921
16	1	54.8	20	-	1123	35857
17	1	52.9	20	-	1880	180874
18	3	85.6	20	1054	1110	324882
19	2	82.1	20	1010	1245	470705
20	2	80.1	20	1052	1446	17924

DFS Radar Parameters
FCC Radar Type 5
Channel 106 Bandwidth 40MHz

Trial Number:			11			Detection (Yes/No)
Number of Bursts in Trial:			11			
Chirp Center Frequency:			5515.6			No
Burst	Number of Pulses	Pulse Width (Microseconds)	Chirp Width (MHz)	Pulse 1-to-2 Spacing (µsec)	Pulse 2-to-3 Spacing (µsec)	Starting Location Within Interval (µsec)
1	1	65.8	9	-	1649	296856
2	3	99.7	9	1296	1572	559614
3	2	68.8	9	1101	1983	824129
4	2	81.2	9	1867	1149	135
5	3	96	9	1482	1755	263597
6	3	84.7	9	1411	1963	526731
7	1	57.9	9	-	1886	792503
8	3	99.5	9	1348	1060	1054943
9	1	52.1	9	-	1647	231775
10	3	97.2	9	1538	1689	494560
11	2	78.6	9	1221	1628	759297
12						
13						
14						
15						
16						
17						
18						
19						
20						

Trial Number:			12			Detection (Yes/No)
Number of Bursts in Trial:			10			
Chirp Center Frequency:			5514.8			No
Burst	Number of Pulses	Pulse Width (Microseconds)	Chirp Width (MHz)	Pulse 1-to-2 Spacing (µsec)	Pulse 2-to-3 Spacing (µsec)	Starting Location Within Interval (µsec)
1	1	59.7	7	-	1806	1126753
2	1	55.5	7	-	1201	219269
3	3	84.2	7	1982	1779	508390
4	2	67.9	7	1529	1172	799760
5	2	78.4	7	1468	1449	1089946
6	2	71.2	7	1279	1936	183147
7	2	78.8	7	1118	1887	473489
8	3	83.5	7	1829	1957	762178
9	3	87.7	7	1790	1959	1052234
10	3	83.5	7	1678	1282	147263
11						
12						
13						
14						
15						
16						
17						
18						
19						
20						

DFS Radar Parameters
FCC Radar Type 5
Channel 106 Bandwidth 40MHz

Trial Number:			13			Detection (Yes/No)
Number of Bursts in Trial:			14			
Chirp Center Frequency:			5516.8			No
Burst	Number of Pulses	Pulse Width (Microseconds)	Chirp Width (MHz)	Pulse 1-to-2 Spacing (µsec)	Pulse 2-to-3 Spacing (µsec)	Starting Location Within Interval (µsec)
1	2	68.9	12	1184	1170	312588
2	3	83.6	12	1431	1217	519111
3	1	62.8	12	-	1191	728204
4	2	78.2	12	1179	1664	79693
5	1	52	12	-	1599	287305
6	3	92.3	12	1743	1459	493101
7	1	66.5	12	-	1291	702550
8	2	77.3	12	1938	1627	54125
9	3	91.9	12	1403	1062	261083
10	3	86.8	12	1016	1384	468140
11	1	58.3	12	-	1017	677199
12	3	96	12	1882	1709	28560
13	2	69.5	12	1742	1512	235731
14	3	86.1	12	1486	1754	442208
15						
16						
17						
18						
19						
20						

Trial Number:			14			Detection (Yes/No)
Number of Bursts in Trial:			9			
Chirp Center Frequency:			5514.4			No
Burst	Number of Pulses	Pulse Width (Microseconds)	Chirp Width (MHz)	Pulse 1-to-2 Spacing (µsec)	Pulse 2-to-3 Spacing (µsec)	Starting Location Within Interval (µsec)
1	2	70.9	6	1947	1639	1012111
2	1	53.4	6	-	1992	4874
3	2	80.8	6	1798	1014	327564
4	2	77	6	1622	1534	650090
5	3	84.4	6	1583	1890	971263
6	1	50.8	6	-	1042	1297368
7	1	60	6	-	1730	288050
8	1	53.7	6	-	1747	610998
9	1	65.8	6	-	1991	933779
10						
11						
12						
13						
14						
15						
16						
17						
18						
19						
20						

DFS Radar Parameters
FCC Radar Type 5
Channel 106 Bandwidth 40MHz

Trial Number:			15			Detection (Yes/No)
Number of Bursts in Trial:			9			
Chirp Center Frequency:			5514.8			No
Burst	Number of Pulses	Pulse Width (Microseconds)	Chirp Width (MHz)	Pulse 1-to-2 Spacing (µsec)	Pulse 2-to-3 Spacing (µsec)	Starting Location Within Interval (µsec)
1	2	72	7	1397	1095	1256198
2	1	54.6	7	-	1034	248399
3	2	77	7	1012	1457	570908
4	3	88	7	1781	1313	892178
5	2	72.8	7	1827	1594	1215591
6	3	95.4	7	1842	1352	208028
7	3	83.7	7	1196	1751	530298
8	2	74.2	7	1340	1530	853669
9	1	52	7	-	1039	1177967
10						
11						
12						
13						
14						
15						
16						
17						
18						
19						
20						

Trial Number:			16			Detection (Yes/No)
Number of Bursts in Trial:			18			
Chirp Center Frequency:			5518.8			No
Burst	Number of Pulses	Pulse Width (Microseconds)	Chirp Width (MHz)	Pulse 1-to-2 Spacing (µsec)	Pulse 2-to-3 Spacing (µsec)	Starting Location Within Interval (µsec)
1	3	94.4	17	1866	1915	83857
2	3	96.7	17	1215	1833	244340
3	3	96.9	17	1470	1490	405152
4	1	66	17	-	1764	568020
5	1	55.9	17	-	1350	64417
6	1	53	17	-	1390	225763
7	3	93.9	17	1562	1569	385114
8	3	92.4	17	1917	1975	545554
9	3	91.4	17	1342	1896	44293
10	2	72.1	17	1061	1996	205373
11	1	60.2	17	-	1160	367366
12	1	60.3	17	-	1987	528116
13	2	70.2	17	1495	1773	24594
14	1	63.8	17	-	1970	185852
15	3	86.1	17	1756	1433	345641
16	3	98.1	17	1058	1778	506322
17	3	97.1	17	1477	1187	4769
18	2	75	17	1655	1447	165712
19						
20						

DFS Radar Parameters
FCC Radar Type 5
Channel 106 Bandwidth 40MHz

Trial Number:			17			Detection (Yes/No)
Number of Bursts in Trial:			14			
Chirp Center Frequency:			5517.2			No
Burst	Number of Pulses	Pulse Width (Microseconds)	Chirp Width (MHz)	Pulse 1-to-2 Spacing (µsec)	Pulse 2-to-3 Spacing (µsec)	Starting Location Within Interval (µsec)
1	3	90.5	13	1555	1312	420017
2	1	51.8	13	-	1293	628872
3	3	99.2	13	1000	2000	833226
4	3	86.9	13	1981	1643	187282
5	2	73.4	13	1346	1725	394911
6	1	65.2	13	-	1155	603401
7	2	67.8	13	1945	1345	808983
8	3	90.9	13	1515	1928	161960
9	2	73.5	13	1072	1668	369540
10	2	75.1	13	1937	1721	576140
11	1	54.3	13	-	1802	784840
12	3	93.7	13	1478	1932	136442
13	2	81.9	13	1698	1681	343758
14	1	58.2	13	-	1311	552157
15						
16						
17						
18						
19						
20						

Trial Number:			18			Detection (Yes/No)
Number of Bursts in Trial:			17			
Chirp Center Frequency:			5518.4			No
Burst	Number of Pulses	Pulse Width (Microseconds)	Chirp Width (MHz)	Pulse 1-to-2 Spacing (µsec)	Pulse 2-to-3 Spacing (µsec)	Starting Location Within Interval (µsec)
1	1	62.6	16	-	1711	625094
2	1	56.2	16	-	1002	91798
3	1	51.6	16	-	1849	262438
4	2	72.9	16	1958	1341	432297
5	3	89.3	16	1139	1876	601557
6	1	54.8	16	-	1656	70675
7	3	97.5	16	1766	1795	240453
8	2	77.7	16	1140	1662	411598
9	2	83.1	16	1844	1144	581963
10	3	92	16	1710	1067	49457
11	1	59.4	16	-	1934	220347
12	3	87.9	16	1750	1152	389853
13	3	93.6	16	1674	1003	560095
14	1	55.4	16	-	1336	28611
15	1	51.8	16	-	1704	199382
16	3	90.9	16	1252	1736	368865
17	3	91	16	1469	1065	539300
18						
19						
20						

DFS Radar Parameters
FCC Radar Type 5
Channel 106 Bandwidth 40MHz

Trial Number:			19			Detection (Yes/No)
Number of Bursts in Trial:			17			
Chirp Center Frequency:			5518.8			No
Burst	Number of Pulses	Pulse Width (Microseconds)	Chirp Width (MHz)	Pulse 1-to-2 Spacing (µsec)	Pulse 2-to-3 Spacing (µsec)	Starting Location Within Interval (µsec)
1	3	89.9	17	1071.000	1224.000	7532
2	2	75.8	17	1159.000	1211.000	178176
3	2	70.4	17	1523.000	1430.000	348511
4	3	93.2	17	1797.000	1761.000	517537
5	2	72.3	17	1333.000	1543.000	689552
6	1	52.9	17	-	1810.000	157284
7	1	57.5	17	-	1919.000	327993
8	2	73.2	17	1458.000	1633.000	497896
9	2	81.7	17	1080.000	1514.000	668818
10	3	98.2	17	1138.000	1112.000	135957
11	1	65.1	17	-	1406.000	307187
12	2	79.5	17	1301.000	1830.000	476874
13	2	68.8	17	1247.000	1306.000	647846
14	3	88.1	17	1541.000	1463.000	114821
15	3	97.8	17	1930.000	1396.000	284733
16	3	90.2	17	1902.000	1166.000	454680
17	1	51.9	17	-	1875.000	627438
18						
19						
20						

Trial Number:			20			Detection (Yes/No)
Number of Bursts in Trial:			16			
Chirp Center Frequency:			5517.6			No
Burst	Number of Pulses	Pulse Width (Microseconds)	Chirp Width (MHz)	Pulse 1-to-2 Spacing (µsec)	Pulse 2-to-3 Spacing (µsec)	Starting Location Within Interval (µsec)
1	3	97.7	14	1872	1347	99657
2	1	63.9	14	-	1483	281667
3	1	62.1	14	-	1248	463352
4	1	63.1	14	-	1903	644383
5	1	58.8	14	-	1540	77761
6	3	92.2	14	1878	1939	257841
7	2	77.5	14	1590	1302	440015
8	1	62.7	14	-	1948	621997
9	2	68.7	14	1194	1517	55315
10	1	57.2	14	-	1997	236782
11	2	77.4	14	1784	1625	417407
12	3	85.5	14	1724	1759	597437
13	2	71.6	14	1554	1999	32953
14	1	62.3	14	-	1732	214512
15	3	89	14	1460	1812	394407
16	2	82.6	14	1962	1660	576010
17						
18						
19						
20						

DFS Radar Parameters
FCC Radar Type 5
Channel 106 Bandwidth 40MHz

Trial Number:			21			Detection (Yes/No)
Number of Bursts in Trial:			15			
Chirp Center Frequency:			5542.8			No
Burst	Number of Pulses	Pulse Width (Microseconds)	Chirp Width (MHz)	Pulse 1-to-2 Spacing (µsec)	Pulse 2-to-3 Spacing (µsec)	Starting Location Within Interval (µsec)
1	3	84.2	13	1906	1545	11350
2	1	64.4	13	-	1961	204939
3	2	67.9	13	1226	1921	397896
4	1	61.5	13	-	1976	592028
5	1	65	13	-	1131	786406
6	3	90.3	13	1489	1846	180440
7	1	53.3	13	-	1969	374644
8	3	94.2	13	1615	1476	566414
9	3	99.7	13	1748	1094	759412
10	1	57.6	13	-	1839	157281
11	1	56.6	13	-	1837	350862
12	2	82.3	13	1652	1473	543562
13	3	98.2	13	1758	1516	735365
14	1	64.3	13	-	1389	133512
15	1	53.8	13	-	1037	327345
16						
17						
18						
19						
20						

Trial Number:			22			Detection (Yes/No)
Number of Bursts in Trial:			20			
Chirp Center Frequency:			5540.4			No
Burst	Number of Pulses	Pulse Width (Microseconds)	Chirp Width (MHz)	Pulse 1-to-2 Spacing (µsec)	Pulse 2-to-3 Spacing (µsec)	Starting Location Within Interval (µsec)
1	1	61.7	19	-	1213	390555
2	3	97.8	19	1413	1455	532608
3	3	91.6	19	1271	1263	81865
4	1	57.8	19	-	1036	227509
5	3	87.9	19	1220	1304	370930
6	2	78.8	19	1544	1693	516141
7	2	77.8	19	1788	1847	64069
8	2	81.1	19	1435	1083	209097
9	3	83.6	19	1813	1256	352652
10	3	92.9	19	1720	1898	497032
11	2	80.5	19	1811	1454	46281
12	1	53.6	19	-	1151	191685
13	3	95.8	19	1366	1723	334930
14	2	80.1	19	1782	1230	480666
15	3	87.7	19	1326	1182	28425
16	1	60	19	-	1737	173625
17	3	85.9	19	1977	1090	317062
18	2	76.2	19	1356	1979	462581
19	3	97	19	1508	1940	10590
20	3	84.7	19	1320	1272	155220

DFS Radar Parameters
FCC Radar Type 5
Channel 106 Bandwidth 40MHz

Trial Number:			23			Detection (Yes/No)
Number of Bursts in Trial:			11			
Chirp Center Frequency:			5544.4			No
Burst	Number of Pulses	Pulse Width (Microseconds)	Chirp Width (MHz)	Pulse 1-to-2 Spacing (µsec)	Pulse 2-to-3 Spacing (µsec)	Starting Location Within Interval (µsec)
1	2	73.7	9	1116	1729	547157
2	2	79.9	9	1870	1973	810303
3	2	78.7	9	1692	1057	1075031
4	3	86.9	9	1550	1364	250401
5	1	57.3	9	-	1214	515423
6	1	60.6	9	-	1644	779401
7	2	68	9	1353	1007	1042896
8	1	63.5	9	-	1831	218460
9	1	51.2	9	-	1030	482950
10	3	85.5	9	1814	1141	744899
11	3	95.3	9	1104	1680	1008928
12						
13						
14						
15						
16						
17						
18						
19						
20						

Trial Number:			24			Detection (Yes/No)
Number of Bursts in Trial:			17			
Chirp Center Frequency:			5541.6			No
Burst	Number of Pulses	Pulse Width (Microseconds)	Chirp Width (MHz)	Pulse 1-to-2 Spacing (µsec)	Pulse 2-to-3 Spacing (µsec)	Starting Location Within Interval (µsec)
1	1	64.5	16	-	1195	120302
2	1	54.3	16	-	1589	291048
3	1	53.3	16	-	1114	462173
4	1	65.7	16	-	1931	632368
5	3	87.8	16	1367	1690	98774
6	2	80.1	16	1240	1102	269719
7	1	54.5	16	-	1638	440791
8	1	51.1	16	-	1815	611439
9	1	53.7	16	-	1423	78173
10	1	56.3	16	-	1726	248919
11	2	83.3	16	1968	1238	418817
12	3	84.3	16	1695	1567	588294
13	2	68.6	16	1033	1688	57022
14	3	84.6	16	1450	1106	227110
15	3	86.7	16	1327	1874	396805
16	1	57.5	16	-	1920	569287
17	1	64	16	-	1803	36063
18						
19						
20						

DFS Radar Parameters
FCC Radar Type 5
Channel 106 Bandwidth 40MHz

Trial Number:			25			Detection (Yes/No)
Number of Bursts in Trial:			16			
Chirp Center Frequency:			5542			No
Burst	Number of Pulses	Pulse Width (Microseconds)	Chirp Width (MHz)	Pulse 1-to-2 Spacing (µsec)	Pulse 2-to-3 Spacing (µsec)	Starting Location Within Interval (µsec)
1	1	62	15	-	1883	219760
2	3	97.6	15	1077	1167	400320
3	2	70.8	15	1024	1860	581864
4	1	56.1	15	-	1601	15975
5	1	51.2	15	-	1290	197567
6	2	79.7	15	1990	1391	378094
7	2	80.1	15	1270	1361	559734
8	2	81.8	15	1706	1908	740020
9	2	69	15	1407	1262	174877
10	1	54.6	15	-	1392	356737
11	1	50.4	15	-	1412	538284
12	2	77.2	15	1832	1718	717784
13	1	60.7	15	-	1998	152688
14	1	64.3	15	-	1015	334541
15	2	79.9	15	1219	1480	515033
16	3	98.1	15	1716	1774	693816
17						
18						
19						
20						

Trial Number:			26			Detection (Yes/No)
Number of Bursts in Trial:			15			
Chirp Center Frequency:			5542.4			No
Burst	Number of Pulses	Pulse Width (Microseconds)	Chirp Width (MHz)	Pulse 1-to-2 Spacing (µsec)	Pulse 2-to-3 Spacing (µsec)	Starting Location Within Interval (µsec)
1	3	97.7	14	1705	1314	138675
2	1	65.9	14	-	1048	332991
3	3	99.3	14	1465	1630	524723
4	3	92.4	14	1641	1744	717375
5	1	64.4	14	-	1506	115286
6	3	99.9	14	1076	1484	307804
7	2	80	14	1504	1518	501652
8	2	81.3	14	1093	1700	695144
9	2	75	14	1444	1852	91227
10	3	93.2	14	1988	1585	283689
11	2	78.3	14	1315	1063	478229
12	3	90.4	14	1098	1096	670680
13	3	95.7	14	1636	1749	67308
14	1	60.1	14	-	1499	261239
15	1	52.3	14	-	1440	454935
16						
17						
18						
19						
20						

DFS Radar Parameters
FCC Radar Type 5
Channel 106 Bandwidth 40MHz

Trial Number:			27			Detection (Yes/No)
Number of Bursts in Trial:			9			
Chirp Center Frequency:			5545.2			No
Burst	Number of Pulses	Pulse Width (Microseconds)	Chirp Width (MHz)	Pulse 1-to-2 Spacing (µsec)	Pulse 2-to-3 Spacing (µsec)	Starting Location Within Interval (µsec)
1	2	70.7	7	1964	1676	1080011
2	1	53.1	7	-	1351	72934
3	1	54	7	-	1462	395949
4	1	51.4	7	-	1019	719209
5	1	53.6	7	-	1297	1042120
6	1	64.7	7	-	1429	33140
7	3	89.2	7	1134	1284	355428
8	1	63.3	7	-	1409	679208
9	2	74.7	7	1686	1605	1000826
10						
11						
12						
13						
14						
15						
16						
17						
18						
19						
20						

Trial Number:			28			Detection (Yes/No)
Number of Bursts in Trial:			10			
Chirp Center Frequency:			5544.8			No
Burst	Number of Pulses	Pulse Width (Microseconds)	Chirp Width (MHz)	Pulse 1-to-2 Spacing (µsec)	Pulse 2-to-3 Spacing (µsec)	Starting Location Within Interval (µsec)
1	2	73.3	8	1006	1871	1191147
2	3	83.9	8	1624	1891	283890
3	2	68.8	8	1881	1576	574425
4	2	75.4	8	1020	1286	865457
5	1	54.1	8	-	1428	1156782
6	2	74	8	1626	1025	248647
7	3	93.1	8	1325	1708	538124
8	3	92	8	1344	1775	828254
9	1	53.4	8	-	1408	1120994
10	3	86.2	8	1971	1573	212364
11						
12						
13						
14						
15						
16						
17						
18						
19						
20						

DFS Radar Parameters
FCC Radar Type 5
Channel 106 Bandwidth 40MHz

Trial Number:			29			Detection (Yes/No)
Number of Bursts in Trial:			10			
Chirp Center Frequency:			5545.2			No
Burst	Number of Pulses	Pulse Width (Microseconds)	Chirp Width (MHz)	Pulse 1-to-2 Spacing (µsec)	Pulse 2-to-3 Spacing (µsec)	Starting Location Within Interval (µsec)
1	2	70.9	7	1001	1498	503336
2	2	68.7	7	1560	1099	793662
3	3	87.4	7	1500	1817	1081855
4	1	65.2	7	-	1222	177319
5	3	99.6	7	1157	1588	467055
6	1	62.1	7	-	1464	758649
7	2	67.6	7	1018	1216	1048657
8	3	89.6	7	1372	1330	141212
9	2	81.1	7	1596	1175	431689
10	1	58	7	-	1236	722980
11						
12						
13						
14						
15						
16						
17						
18						
19						
20						

Trial Number:			30			Detection (Yes/No)
Number of Bursts in Trial:			20			
Chirp Center Frequency:			5540			No
Burst	Number of Pulses	Pulse Width (Microseconds)	Chirp Width (MHz)	Pulse 1-to-2 Spacing (µsec)	Pulse 2-to-3 Spacing (µsec)	Starting Location Within Interval (µsec)
1	1	51.4	20	-	1609	506021
2	3	89.7	20	1897	1280	52498
3	3	86.2	20	1794	1855	196772
4	1	58.9	20	-	1581	343032
5	1	52.3	20	-	1809	487982
6	2	79.7	20	1202	1826	34800
7	2	74.1	20	1804	1796	179412
8	1	56.7	20	-	1960	324949
9	1	62.8	20	-	1448	470395
10	2	76.2	20	1323	1777	16963
11	3	83.4	20	1288	1461	161353
12	1	58.5	20	-	1785	307173
13	1	52.5	20	-	1481	452488
14	2	74.6	20	1719	1471	595942
15	2	69.1	20	1294	1943	143865
16	2	80.5	20	1713	1492	288615
17	2	81.1	20	1026	1526	433830
18	1	54.5	20	-	1893	579369
19	2	77.1	20	1108	1355	126201
20	1	51	20	-	1772	271436

Channel 106 Bandwidth 50MHz

Report Number : FZ561115-04A

DFS Radar Parameters
FCC Radar Type 1
Channel 106 Bandwidth 50MHz

Trial #	Pulse Repetition Frequency Number (1 to 23)	Pulse Repetition Frequency (Pulses Per Second)	Pulse Repetition Interval (Microseconds)	Detection (Yes / No)
1	3	1792.11	558	Y
2	12	326.16	3066	Y
3	21	1089.32	918	Y
4	13	1319.26	758	Y
5	10	1432.66	698	Y
6	14	1285.35	778	Y
7	4	1730.10	578	Y
8	7	1567.40	638	Y
9	20	1113.59	898	Y
10	6	1618.12	618	Y
11	5	1672.24	598	Y
12	18	1165.50	858	Y
13	17	1193.32	838	Y
14	1	1930.50	518	Y
15	15	1253.13	798	Y
16		364.56	2743	Y
17		1267.43	789	Y
18		396.67	2521	Y
19		611.62	1635	Y
20		827.13	1209	Y
21		545.85	1832	Y
22		603.14	1658	Y
23		598.80	1670	Y
24		617.67	1619	Y
25		1785.71	560	Y
26		505.82	1977	Y
27		677.05	1477	Y
28		734.75	1361	Y
29		416.49	2401	Y
30		462.96	2160	Y

DFS Radar Parameters
FCC Radar Type 2
Channel 106 Bandwidth 50MHz

Trial #	Number Pulses per Burst	Pulse Width (Microseconds)	Pulse Repetition Interval (Microseconds)	Detection (Yes / No)
1	28	4.40	162	Y
2	28	4.00	187	Y
3	24	1.70	205	Y
4	25	2.60	178	Y
5	23	1.40	218	Y
6	28	4.40	221	Y
7	23	1.30	166	Y
8	28	4.30	159	Y
9	23	1.40	201	Y
10	29	4.90	152	Y
11	24	2.00	195	Y
12	24	1.70	211	Y
13	26	2.90	151	Y
14	23	1.30	207	Y
15	23	1.50	161	Y
16	28	4.20	223	Y
17	26	3.00	180	Y
18	28	3.90	158	Y
19	28	4.10	208	Y
20	27	3.50	198	Y
21	26	3.20	214	Y
22	29	4.80	156	Y
23	25	2.20	202	Y
24	28	4.00	228	Y
25	27	3.80	150	Y
26	27	3.40	190	Y
27	23	1.50	200	Y
28	24	1.80	210	Y
29	24	1.70	197	Y
30	29	5.00	193	Y

DFS Radar Parameters
FCC Radar Type 3
Channel 106 Bandwidth 50MHz

Trial #	Number Pulses per Burst	Pulse Width (Microseconds)	Pulse Repetition Interval (Microseconds)	Detection (Yes / No)
1	18	9.40	250	Y
2	18	9.00	262	Y
3	16	6.70	282	Y
4	17	7.60	419	Y
5	16	6.40	469	Y
6	18	9.40	209	Y
7	16	6.30	268	Y
8	18	9.30	378	Y
9	16	6.40	230	Y
10	18	9.90	257	Y
11	16	7.00	479	Y
12	16	6.70	286	Y
13	17	7.90	433	Y
14	16	6.30	244	Y
15	16	6.50	204	Y
16	18	9.20	369	Y
17	17	8.00	271	Y
18	18	8.90	458	Y
19	18	9.10	267	Y
20	17	8.50	461	Y
21	17	8.20	355	Y
22	18	9.80	329	Y
23	16	7.20	444	Y
24	18	9.00	394	Y
25	18	8.80	440	Y
26	17	8.40	462	Y
27	16	6.50	281	Y
28	16	6.80	298	Y
29	16	6.70	482	Y
30	18	10.00	345	Y

DFS Radar Parameters
FCC Radar Type 4
Channel 106 Bandwidth 50MHz

Trial #	Number Pulses per Burst	Pulse Width (Microseconds)	Pulse Repetition Interval (Microseconds)	Detection (Yes / No)
1	16	18.50	250	Y
2	15	17.80	262	Y
3	12	12.70	282	Y
4	14	14.70	419	Y
5	12	11.80	469	Y
6	16	18.50	209	Y
7	12	11.70	268	Y
8	16	18.40	378	Y
9	12	11.90	230	Y
10	16	19.70	257	Y
11	13	13.30	479	Y
12	12	12.60	286	Y
13	14	15.20	433	Y
14	12	11.80	244	Y
15	12	12.10	204	Y
16	16	18.20	369	Y
17	14	15.60	271	Y
18	15	17.50	458	Y
19	15	17.90	267	Y
20	15	16.60	461	Y
21	14	16.00	355	Y
22	16	19.40	329	Y
23	13	13.70	444	Y
24	15	17.70	394	Y
25	15	17.20	440	Y
26	14	16.30	462	Y
27	12	12.20	281	Y
28	12	12.70	298	Y
29	12	12.60	482	Y
30	16	19.80	345	Y

DFS Radar Parameters
FCC Radar Type 5
Channel 106 Bandwidth 50MHz

Trial Number:			1			Detection (Yes/No)
Number of Bursts in Trial:			18			
Chirp Center Frequency:			5530			Yes
Burst	Number of Pulses	Pulse Width (Microseconds)	Chirp Width (MHz)	Pulse 1-to-2 Spacing (µsec)	Pulse 2-to-3 Spacing (µsec)	Starting Location Within Interval (µsec)
1	3	91.7	18	1598	1174	50049
2	3	87.6	18	1731	1799	210603
3	1	59.6	18	-	1250	373075
4	2	70.6	18	1972	1378	532773
5	1	54.9	18	-	1143	30432
6	3	91.7	18	1295	1603	190978
7	1	54.2	18	-	1793	352908
8	3	90.9	18	1146	1318	512779
9	1	55.3	18	-	1513	10544
10	3	98.2	18	1765	1848	170951
11	1	62.8	18	-	1349	333267
12	1	59	18	-	1393	494595
13	2	73.6	18	1438	1892	654035
14	1	54.5	18	-	1208	152063
15	1	56.2	18	-	1232	313447
16	3	90.1	18	1780	1687	471928
17	2	75.4	18	1086	1055	635355
18	3	85.8	18	1717	1161	131596
19						
20						

Trial Number:			2			Detection (Yes/No)
Number of Bursts in Trial:			17			
Chirp Center Frequency:			5530			Yes
Burst	Number of Pulses	Pulse Width (Microseconds)	Chirp Width (MHz)	Pulse 1-to-2 Spacing (µsec)	Pulse 2-to-3 Spacing (µsec)	Starting Location Within Interval (µsec)
1	3	88.5	17	1292	1124	309787
2	2	81.1	17	1965	1254	480409
3	2	77.7	17	1944	1527	650594
4	3	96.7	17	1176	1394	118400
5	1	65.3	17	-	1760	289600
6	3	86.9	17	1993	1707	458057
7	3	84.2	17	1107	1316	629583
8	2	79.5	17	1229	1205	97699
9	1	56.9	17	-	1614	268620
10	1	59.8	17	-	1776	439327
11	1	58.8	17	-	1907	609981
12	3	98.9	17	1385	1818	76481
13	2	75.7	17	1578	1770	246971
14	2	70.3	17	1329	1081	417915
15	3	92.5	17	1022	1031	587301
16	2	69	17	1556	1305	55635
17	2	68.8	17	1183	1752	226116
18						
19						
20						

DFS Radar Parameters
FCC Radar Type 5
Channel 106 Bandwidth 50MHz

Trial Number:			3			Detection (Yes/No)
Number of Bursts in Trial:			10			
Chirp Center Frequency:			5530			Yes
Burst	Number of Pulses	Pulse Width (Microseconds)	Chirp Width (MHz)	Pulse 1-to-2 Spacing (µsec)	Pulse 2-to-3 Spacing (µsec)	Starting Location Within Interval (µsec)
1	1	52.8	8	-	1386	676257
2	2	71.8	8	1950	1119	965601
3	1	51.5	8	-	1044	59063
4	2	75.9	8	1967	1309	349197
5	3	83.7	8	1133	1273	639336
6	2	81.3	8	1909	1741	929393
7	1	54.5	8	-	1307	23240
8	3	94.4	8	1148	1335	313147
9	2	77.7	8	1640	1434	603790
10	2	78.7	8	1580	1703	893927
11						
12						
13						
14						
15						
16						
17						
18						
19						
20						

Trial Number:			4			Detection (Yes/No)
Number of Bursts in Trial:			13			
Chirp Center Frequency:			5530			Yes
Burst	Number of Pulses	Pulse Width (Microseconds)	Chirp Width (MHz)	Pulse 1-to-2 Spacing (µsec)	Pulse 2-to-3 Spacing (µsec)	Starting Location Within Interval (µsec)
1	1	55	11	-	1439	911974
2	1	55.1	11	-	1427	213865
3	2	68.9	11	1863	1069	436679
4	1	55.1	11	-	1100	661157
5	2	70.7	11	1738	1691	882531
6	2	70.3	11	1941	1135	185997
7	1	52.7	11	-	1819	409686
8	2	79.7	11	1694	1926	631882
9	3	96.4	11	1281	1339	854349
10	3	86.7	11	1851	1510	158145
11	3	95	11	1277	1505	381337
12	2	72.3	11	1027	1924	604854
13	2	72.7	11	1127	1951	827899
14						
15						
16						
17						
18						
19						
20						

DFS Radar Parameters
FCC Radar Type 5
Channel 106 Bandwidth 50MHz

Trial Number:			5			Detection (Yes/No)
Number of Bursts in Trial:			9			
Chirp Center Frequency:			5530			Yes
Burst	Number of Pulses	Pulse Width (Microseconds)	Chirp Width (MHz)	Pulse 1-to-2 Spacing (µsec)	Pulse 2-to-3 Spacing (µsec)	Starting Location Within Interval (µsec)
1	3	86.4	6	1873	1894	189193
2	2	75.4	6	1276	1049	512377
3	3	84.8	6	1682	1059	834157
4	3	94.5	6	1209	1405	1156411
5	2	82	6	1697	1251	149732
6	1	56.5	6	-	1343	472962
7	2	72.5	6	1451	1383	795121
8	3	92.6	6	1869	1249	1116425
9	1	66.6	6	-	1177	110134
10						
11						
12						
13						
14						
15						
16						
17						
18						
19						
20						

Trial Number:			6			Detection (Yes/No)
Number of Bursts in Trial:			18			
Chirp Center Frequency:			5530			Yes
Burst	Number of Pulses	Pulse Width (Microseconds)	Chirp Width (MHz)	Pulse 1-to-2 Spacing (µsec)	Pulse 2-to-3 Spacing (µsec)	Starting Location Within Interval (µsec)
1	1	54.5	18	-	1791	216221
2	3	85.8	18	1582	1103	376357
3	1	53.4	18	-	1415	539032
4	2	68.2	18	1147	1398	35065
5	2	73.9	18	1663	1087	196075
6	1	59.9	18	-	1995	357502
7	1	54.7	18	-	1864	518808
8	3	99.9	18	1068	1243	15187
9	2	73.1	18	1635	1650	176099
10	1	52.3	18	-	1659	337816
11	3	87.7	18	1358	1595	496898
12	1	58.2	18	-	1577	660468
13	2	79.2	18	1507	1043	156454
14	2	74.4	18	1587	1901	317075
15	3	88	18	1646	1834	477028
16	1	54.6	18	-	1955	640235
17	3	88.1	18	1949	1531	136139
18	2	78.5	18	1986	1199	297399
19						
20						

DFS Radar Parameters
FCC Radar Type 5
Channel 106 Bandwidth 50MHz

Trial Number:			7			Detection (Yes/No)
Number of Bursts in Trial:			9			
Chirp Center Frequency:			5530			Yes
Burst	Number of Pulses	Pulse Width (Microseconds)	Chirp Width (MHz)	Pulse 1-to-2 Spacing (µsec)	Pulse 2-to-3 Spacing (µsec)	Starting Location Within Interval (µsec)
1	2	72.9	6	1631	1267	919026
2	3	90.7	6	1801	1571	1239822
3	3	96.2	6	1261	1675	233653
4	2	82.4	6	1575	1073	556712
5	2	73.8	6	1592	1735	878996
6	2	80.6	6	1021	1362	1202418
7	3	99.2	6	1402	1821	193919
8	1	65.1	6	-	1539	517390
9	1	50.4	6	-	1823	840212
10						
11						
12						
13						
14						
15						
16						
17						
18						
19						
20						

Trial Number:			8			Detection (Yes/No)
Number of Bursts in Trial:			18			
Chirp Center Frequency:			5530			Yes
Burst	Number of Pulses	Pulse Width (Microseconds)	Chirp Width (MHz)	Pulse 1-to-2 Spacing (µsec)	Pulse 2-to-3 Spacing (µsec)	Starting Location Within Interval (µsec)
1	3	98.9	18	1568	1769	578194
2	3	86.9	18	1604	1040	76884
3	2	72.5	18	1497	1121	238139
4	3	87.9	18	1651	1956	397608
5	1	55.1	18	-	1129	561501
6	3	86.1	18	1843	1767	57073
7	3	88.4	18	1246	1370	217779
8	1	50.6	18	-	1259	380130
9	2	83.2	18	1425	1164	540430
10	1	51.7	18	-	1616	37467
11	1	52.5	18	-	1404	198826
12	3	96.5	18	1381	1763	358564
13	3	92.9	18	1410	1673	519094
14	2	74.9	18	1820	1753	17547
15	3	96.6	18	1128	1768	178179
16	1	63.5	18	-	1496	340252
17	3	92.7	18	1549	1324	499451
18	3	84.6	18	1032	1257	660696
19						
20						

DFS Radar Parameters
FCC Radar Type 5
Channel 106 Bandwidth 50MHz

Trial Number:			9			Detection (Yes/No)
Number of Bursts in Trial:			9			
Chirp Center Frequency:			5530			Yes
Burst	Number of Pulses	Pulse Width (Microseconds)	Chirp Width (MHz)	Pulse 1-to-2 Spacing (µsec)	Pulse 2-to-3 Spacing (µsec)	Starting Location Within Interval (µsec)
1	1	64.4	6	-	1233	318530
2	1	57.2	6	-	1509	641474
3	1	51	6	-	1561	964446
4	3	96.8	6	1178	1740	1284875
5	3	89.8	6	1679	1532	278070
6	3	94	6	1519	1953	599941
7	2	78.1	6	1488	1546	923637
8	3	99.6	6	1564	1145	1244707
9	1	51.9	6	-	1914	238817
10						
11						
12						
13						
14						
15						
16						
17						
18						
19						
20						

Trial Number:			10			Detection (Yes/No)
Number of Bursts in Trial:			20			
Chirp Center Frequency:			5530			Yes
Burst	Number of Pulses	Pulse Width (Microseconds)	Chirp Width (MHz)	Pulse 1-to-2 Spacing (µsec)	Pulse 2-to-3 Spacing (µsec)	Starting Location Within Interval (µsec)
1	2	70.5	20	1046	1800	251940
2	2	72.2	20	1189	1952	396573
3	1	61.9	20	-	1255	543041
4	2	72.9	20	1258	1132	89340
5	2	69	20	1171	1669	234103
6	1	58.7	20	-	1602	379719
7	1	59.4	20	-	1672	524788
8	1	55.9	20	-	1186	71631
9	1	62.9	20	-	1494	216751
10	1	50.6	20	-	1841	361698
11	1	64.4	20	-	1521	507041
12	2	82.5	20	1377	1712	53571
13	2	72.2	20	1359	1702	198350
14	3	90.8	20	1671	1185	342601
15	2	73.7	20	1942	1097	487921
16	1	54.8	20	-	1123	35857
17	1	52.9	20	-	1880	180874
18	3	85.6	20	1054	1110	324882
19	2	82.1	20	1010	1245	470705
20	2	80.1	20	1052	1446	17924

DFS Radar Parameters
FCC Radar Type 5
Channel 106 Bandwidth 50MHz

Trial Number:			11			Detection (Yes/No)
Number of Bursts in Trial:			11			
Chirp Center Frequency:			5511.6			Yes
Burst	Number of Pulses	Pulse Width (Microseconds)	Chirp Width (MHz)	Pulse 1-to-2 Spacing (µsec)	Pulse 2-to-3 Spacing (µsec)	Starting Location Within Interval (µsec)
1	1	65.8	9	-	1649	296856
2	3	99.7	9	1296	1572	559614
3	2	68.8	9	1101	1983	824129
4	2	81.2	9	1867	1149	135
5	3	96	9	1482	1755	263597
6	3	84.7	9	1411	1963	526731
7	1	57.9	9	-	1886	792503
8	3	99.5	9	1348	1060	1054943
9	1	52.1	9	-	1647	231775
10	3	97.2	9	1538	1689	494560
11	2	78.6	9	1221	1628	759297
12						
13						
14						
15						
16						
17						
18						
19						
20						

Trial Number:			12			Detection (Yes/No)
Number of Bursts in Trial:			10			
Chirp Center Frequency:			5510.8			Yes
Burst	Number of Pulses	Pulse Width (Microseconds)	Chirp Width (MHz)	Pulse 1-to-2 Spacing (µsec)	Pulse 2-to-3 Spacing (µsec)	Starting Location Within Interval (µsec)
1	1	59.7	7	-	1806	1126753
2	1	55.5	7	-	1201	219269
3	3	84.2	7	1982	1779	508390
4	2	67.9	7	1529	1172	799760
5	2	78.4	7	1468	1449	1089946
6	2	71.2	7	1279	1936	183147
7	2	78.8	7	1118	1887	473489
8	3	83.5	7	1829	1957	762178
9	3	87.7	7	1790	1959	1052234
10	3	83.5	7	1678	1282	147263
11						
12						
13						
14						
15						
16						
17						
18						
19						
20						

DFS Radar Parameters
FCC Radar Type 5
Channel 106 Bandwidth 50MHz

Trial Number:			13			Detection (Yes/No)
Number of Bursts in Trial:			14			
Chirp Center Frequency:			5512.8			Yes
Burst	Number of Pulses	Pulse Width (Microseconds)	Chirp Width (MHz)	Pulse 1-to-2 Spacing (µsec)	Pulse 2-to-3 Spacing (µsec)	Starting Location Within Interval (µsec)
1	2	68.9	12	1184	1170	312588
2	3	83.6	12	1431	1217	519111
3	1	62.8	12	-	1191	728204
4	2	78.2	12	1179	1664	79693
5	1	52	12	-	1599	287305
6	3	92.3	12	1743	1459	493101
7	1	66.5	12	-	1291	702550
8	2	77.3	12	1938	1627	54125
9	3	91.9	12	1403	1062	261083
10	3	86.8	12	1016	1384	468140
11	1	58.3	12	-	1017	677199
12	3	96	12	1882	1709	28560
13	2	69.5	12	1742	1512	235731
14	3	86.1	12	1486	1754	442208
15						
16						
17						
18						
19						
20						

Trial Number:			14			Detection (Yes/No)
Number of Bursts in Trial:			9			
Chirp Center Frequency:			5510.4			Yes
Burst	Number of Pulses	Pulse Width (Microseconds)	Chirp Width (MHz)	Pulse 1-to-2 Spacing (µsec)	Pulse 2-to-3 Spacing (µsec)	Starting Location Within Interval (µsec)
1	2	70.9	6	1947	1639	1012111
2	1	53.4	6	-	1992	4874
3	2	80.8	6	1798	1014	327564
4	2	77	6	1622	1534	650090
5	3	84.4	6	1583	1890	971263
6	1	50.8	6	-	1042	1297368
7	1	60	6	-	1730	288050
8	1	53.7	6	-	1747	610998
9	1	65.8	6	-	1991	933779
10						
11						
12						
13						
14						
15						
16						
17						
18						
19						
20						

DFS Radar Parameters
FCC Radar Type 5
Channel 106 Bandwidth 50MHz

Trial Number:			15			Detection (Yes/No)
Number of Bursts in Trial:			9			
Chirp Center Frequency:			5510.8			Yes
Burst	Number of Pulses	Pulse Width (Microseconds)	Chirp Width (MHz)	Pulse 1-to-2 Spacing (µsec)	Pulse 2-to-3 Spacing (µsec)	Starting Location Within Interval (µsec)
1	2	72	7	1397	1095	1256198
2	1	54.6	7	-	1034	248399
3	2	77	7	1012	1457	570908
4	3	88	7	1781	1313	892178
5	2	72.8	7	1827	1594	1215591
6	3	95.4	7	1842	1352	208028
7	3	83.7	7	1196	1751	530298
8	2	74.2	7	1340	1530	853669
9	1	52	7	-	1039	1177967
10						
11						
12						
13						
14						
15						
16						
17						
18						
19						
20						

Trial Number:			16			Detection (Yes/No)
Number of Bursts in Trial:			18			
Chirp Center Frequency:			5514.8			Yes
Burst	Number of Pulses	Pulse Width (Microseconds)	Chirp Width (MHz)	Pulse 1-to-2 Spacing (µsec)	Pulse 2-to-3 Spacing (µsec)	Starting Location Within Interval (µsec)
1	3	94.4	17	1866	1915	83857
2	3	96.7	17	1215	1833	244340
3	3	96.9	17	1470	1490	405152
4	1	66	17	-	1764	568020
5	1	55.9	17	-	1350	64417
6	1	53	17	-	1390	225763
7	3	93.9	17	1562	1569	385114
8	3	92.4	17	1917	1975	545554
9	3	91.4	17	1342	1896	44293
10	2	72.1	17	1061	1996	205373
11	1	60.2	17	-	1160	367366
12	1	60.3	17	-	1987	528116
13	2	70.2	17	1495	1773	24594
14	1	63.8	17	-	1970	185852
15	3	86.1	17	1756	1433	345641
16	3	98.1	17	1058	1778	506322
17	3	97.1	17	1477	1187	4769
18	2	75	17	1655	1447	165712
19						
20						

DFS Radar Parameters
FCC Radar Type 5
Channel 106 Bandwidth 50MHz

Trial Number:			17			Detection (Yes/No)
Number of Bursts in Trial:			14			
Chirp Center Frequency:			5513.2			Yes
Burst	Number of Pulses	Pulse Width (Microseconds)	Chirp Width (MHz)	Pulse 1-to-2 Spacing (µsec)	Pulse 2-to-3 Spacing (µsec)	Starting Location Within Interval (µsec)
1	3	90.5	13	1555	1312	420017
2	1	51.8	13	-	1293	628872
3	3	99.2	13	1000	2000	833226
4	3	86.9	13	1981	1643	187282
5	2	73.4	13	1346	1725	394911
6	1	65.2	13	-	1155	603401
7	2	67.8	13	1945	1345	808983
8	3	90.9	13	1515	1928	161960
9	2	73.5	13	1072	1668	369540
10	2	75.1	13	1937	1721	576140
11	1	54.3	13	-	1802	784840
12	3	93.7	13	1478	1932	136442
13	2	81.9	13	1698	1681	343758
14	1	58.2	13	-	1311	552157
15						
16						
17						
18						
19						
20						

Trial Number:			18			Detection (Yes/No)
Number of Bursts in Trial:			17			
Chirp Center Frequency:			5514.4			Yes
Burst	Number of Pulses	Pulse Width (Microseconds)	Chirp Width (MHz)	Pulse 1-to-2 Spacing (µsec)	Pulse 2-to-3 Spacing (µsec)	Starting Location Within Interval (µsec)
1	1	62.6	16	-	1711	625094
2	1	56.2	16	-	1002	91798
3	1	51.6	16	-	1849	262438
4	2	72.9	16	1958	1341	432297
5	3	89.3	16	1139	1876	601557
6	1	54.8	16	-	1656	70675
7	3	97.5	16	1766	1795	240453
8	2	77.7	16	1140	1662	411598
9	2	83.1	16	1844	1144	581963
10	3	92	16	1710	1067	49457
11	1	59.4	16	-	1934	220347
12	3	87.9	16	1750	1152	389853
13	3	93.6	16	1674	1003	560095
14	1	55.4	16	-	1336	28611
15	1	51.8	16	-	1704	199382
16	3	90.9	16	1252	1736	368865
17	3	91	16	1469	1065	539300
18						
19						
20						

DFS Radar Parameters
FCC Radar Type 5
Channel 106 Bandwidth 50MHz

Trial Number:			19			Detection (Yes/No)
Number of Bursts in Trial:			17			
Chirp Center Frequency:			5514.8			Yes
Burst	Number of Pulses	Pulse Width (Microseconds)	Chirp Width (MHz)	Pulse 1-to-2 Spacing (µsec)	Pulse 2-to-3 Spacing (µsec)	Starting Location Within Interval (µsec)
1	3	89.9	17	1071.000	1224.000	7532
2	2	75.8	17	1159.000	1211.000	178176
3	2	70.4	17	1523.000	1430.000	348511
4	3	93.2	17	1797.000	1761.000	517537
5	2	72.3	17	1333.000	1543.000	689552
6	1	52.9	17	-	1810.000	157284
7	1	57.5	17	-	1919.000	327993
8	2	73.2	17	1458.000	1633.000	497896
9	2	81.7	17	1080.000	1514.000	668818
10	3	98.2	17	1138.000	1112.000	135957
11	1	65.1	17	-	1406.000	307187
12	2	79.5	17	1301.000	1830.000	476874
13	2	68.8	17	1247.000	1306.000	647846
14	3	88.1	17	1541.000	1463.000	114821
15	3	97.8	17	1930.000	1396.000	284733
16	3	90.2	17	1902.000	1166.000	454680
17	1	51.9	17	-	1875.000	627438
18						
19						
20						

Trial Number:			20			Detection (Yes/No)
Number of Bursts in Trial:			16			
Chirp Center Frequency:			5513.6			Yes
Burst	Number of Pulses	Pulse Width (Microseconds)	Chirp Width (MHz)	Pulse 1-to-2 Spacing (µsec)	Pulse 2-to-3 Spacing (µsec)	Starting Location Within Interval (µsec)
1	3	97.7	14	1872	1347	99657
2	1	63.9	14	-	1483	281667
3	1	62.1	14	-	1248	463352
4	1	63.1	14	-	1903	644383
5	1	58.8	14	-	1540	77761
6	3	92.2	14	1878	1939	257841
7	2	77.5	14	1590	1302	440015
8	1	62.7	14	-	1948	621997
9	2	68.7	14	1194	1517	55315
10	1	57.2	14	-	1997	236782
11	2	77.4	14	1784	1625	417407
12	3	85.5	14	1724	1759	597437
13	2	71.6	14	1554	1999	32953
14	1	62.3	14	-	1732	214512
15	3	89	14	1460	1812	394407
16	2	82.6	14	1962	1660	576010
17						
18						
19						
20						

DFS Radar Parameters
FCC Radar Type 5
Channel 106 Bandwidth 50MHz

Trial Number:			21			Detection (Yes/No)
Number of Bursts in Trial:			15			
Chirp Center Frequency:			5546.8			Yes
Burst	Number of Pulses	Pulse Width (Microseconds)	Chirp Width (MHz)	Pulse 1-to-2 Spacing (µsec)	Pulse 2-to-3 Spacing (µsec)	Starting Location Within Interval (µsec)
1	3	84.2	13	1906	1545	11350
2	1	64.4	13	-	1961	204939
3	2	67.9	13	1226	1921	397896
4	1	61.5	13	-	1976	592028
5	1	65	13	-	1131	786406
6	3	90.3	13	1489	1846	180440
7	1	53.3	13	-	1969	374644
8	3	94.2	13	1615	1476	566414
9	3	99.7	13	1748	1094	759412
10	1	57.6	13	-	1839	157281
11	1	56.6	13	-	1837	350862
12	2	82.3	13	1652	1473	543562
13	3	98.2	13	1758	1516	735365
14	1	64.3	13	-	1389	133512
15	1	53.8	13	-	1037	327345
16						
17						
18						
19						
20						

Trial Number:			22			Detection (Yes/No)
Number of Bursts in Trial:			20			
Chirp Center Frequency:			5544.4			Yes
Burst	Number of Pulses	Pulse Width (Microseconds)	Chirp Width (MHz)	Pulse 1-to-2 Spacing (µsec)	Pulse 2-to-3 Spacing (µsec)	Starting Location Within Interval (µsec)
1	1	61.7	19	-	1213	390555
2	3	97.8	19	1413	1455	532608
3	3	91.6	19	1271	1263	81865
4	1	57.8	19	-	1036	227509
5	3	87.9	19	1220	1304	370930
6	2	78.8	19	1544	1693	516141
7	2	77.8	19	1788	1847	64069
8	2	81.1	19	1435	1083	209097
9	3	83.6	19	1813	1256	352652
10	3	92.9	19	1720	1898	497032
11	2	80.5	19	1811	1454	46281
12	1	53.6	19	-	1151	191685
13	3	95.8	19	1366	1723	334930
14	2	80.1	19	1782	1230	480666
15	3	87.7	19	1326	1182	28425
16	1	60	19	-	1737	173625
17	3	85.9	19	1977	1090	317062
18	2	76.2	19	1356	1979	462581
19	3	97	19	1508	1940	10590
20	3	84.7	19	1320	1272	155220

DFS Radar Parameters
FCC Radar Type 5
Channel 106 Bandwidth 50MHz

Trial Number:			23			Detection (Yes/No)
Number of Bursts in Trial:			11			
Chirp Center Frequency:			5548.4			Yes
Burst	Number of Pulses	Pulse Width (Microseconds)	Chirp Width (MHz)	Pulse 1-to-2 Spacing (µsec)	Pulse 2-to-3 Spacing (µsec)	Starting Location Within Interval (µsec)
1	2	73.7	9	1116	1729	547157
2	2	79.9	9	1870	1973	810303
3	2	78.7	9	1692	1057	1075031
4	3	86.9	9	1550	1364	250401
5	1	57.3	9	-	1214	515423
6	1	60.6	9	-	1644	779401
7	2	68	9	1353	1007	1042896
8	1	63.5	9	-	1831	218460
9	1	51.2	9	-	1030	482950
10	3	85.5	9	1814	1141	744899
11	3	95.3	9	1104	1680	1008928
12						
13						
14						
15						
16						
17						
18						
19						
20						

Trial Number:			24			Detection (Yes/No)
Number of Bursts in Trial:			17			
Chirp Center Frequency:			5545.6			Yes
Burst	Number of Pulses	Pulse Width (Microseconds)	Chirp Width (MHz)	Pulse 1-to-2 Spacing (µsec)	Pulse 2-to-3 Spacing (µsec)	Starting Location Within Interval (µsec)
1	1	64.5	16	-	1195	120302
2	1	54.3	16	-	1589	291048
3	1	53.3	16	-	1114	462173
4	1	65.7	16	-	1931	632368
5	3	87.8	16	1367	1690	98774
6	2	80.1	16	1240	1102	269719
7	1	54.5	16	-	1638	440791
8	1	51.1	16	-	1815	611439
9	1	53.7	16	-	1423	78173
10	1	56.3	16	-	1726	248919
11	2	83.3	16	1968	1238	418817
12	3	84.3	16	1695	1567	588294
13	2	68.6	16	1033	1688	57022
14	3	84.6	16	1450	1106	227110
15	3	86.7	16	1327	1874	396805
16	1	57.5	16	-	1920	569287
17	1	64	16	-	1803	36063
18						
19						
20						

DFS Radar Parameters
FCC Radar Type 5
Channel 106 Bandwidth 50MHz

Trial Number:			25			Detection (Yes/No)
Number of Bursts in Trial:			16			
Chirp Center Frequency:			5546			Yes
Burst	Number of Pulses	Pulse Width (Microseconds)	Chirp Width (MHz)	Pulse 1-to-2 Spacing (µsec)	Pulse 2-to-3 Spacing (µsec)	Starting Location Within Interval (µsec)
1	1	62	15	-	1883	219760
2	3	97.6	15	1077	1167	400320
3	2	70.8	15	1024	1860	581864
4	1	56.1	15	-	1601	15975
5	1	51.2	15	-	1290	197567
6	2	79.7	15	1990	1391	378094
7	2	80.1	15	1270	1361	559734
8	2	81.8	15	1706	1908	740020
9	2	69	15	1407	1262	174877
10	1	54.6	15	-	1392	356737
11	1	50.4	15	-	1412	538284
12	2	77.2	15	1832	1718	717784
13	1	60.7	15	-	1998	152688
14	1	64.3	15	-	1015	334541
15	2	79.9	15	1219	1480	515033
16	3	98.1	15	1716	1774	693816
17						
18						
19						
20						

Trial Number:			26			Detection (Yes/No)
Number of Bursts in Trial:			15			
Chirp Center Frequency:			5546.4			Yes
Burst	Number of Pulses	Pulse Width (Microseconds)	Chirp Width (MHz)	Pulse 1-to-2 Spacing (µsec)	Pulse 2-to-3 Spacing (µsec)	Starting Location Within Interval (µsec)
1	3	97.7	14	1705	1314	138675
2	1	65.9	14	-	1048	332991
3	3	99.3	14	1465	1630	524723
4	3	92.4	14	1641	1744	717375
5	1	64.4	14	-	1506	115286
6	3	99.9	14	1076	1484	307804
7	2	80	14	1504	1518	501652
8	2	81.3	14	1093	1700	695144
9	2	75	14	1444	1852	91227
10	3	93.2	14	1988	1585	283689
11	2	78.3	14	1315	1063	478229
12	3	90.4	14	1098	1096	670680
13	3	95.7	14	1636	1749	67308
14	1	60.1	14	-	1499	261239
15	1	52.3	14	-	1440	454935
16						
17						
18						
19						
20						

DFS Radar Parameters
FCC Radar Type 5
Channel 106 Bandwidth 50MHz

Trial Number:			27			Detection (Yes/No)
Number of Bursts in Trial:			9			
Chirp Center Frequency:			5549.2			Yes
Burst	Number of Pulses	Pulse Width (Microseconds)	Chirp Width (MHz)	Pulse 1-to-2 Spacing (µsec)	Pulse 2-to-3 Spacing (µsec)	Starting Location Within Interval (µsec)
1	2	70.7	7	1964	1676	1080011
2	1	53.1	7	-	1351	72934
3	1	54	7	-	1462	395949
4	1	51.4	7	-	1019	719209
5	1	53.6	7	-	1297	1042120
6	1	64.7	7	-	1429	33140
7	3	89.2	7	1134	1284	355428
8	1	63.3	7	-	1409	679208
9	2	74.7	7	1686	1605	1000826
10						
11						
12						
13						
14						
15						
16						
17						
18						
19						
20						

Trial Number:			28			Detection (Yes/No)
Number of Bursts in Trial:			10			
Chirp Center Frequency:			5548.8			Yes
Burst	Number of Pulses	Pulse Width (Microseconds)	Chirp Width (MHz)	Pulse 1-to-2 Spacing (µsec)	Pulse 2-to-3 Spacing (µsec)	Starting Location Within Interval (µsec)
1	2	73.3	8	1006	1871	1191147
2	3	83.9	8	1624	1891	283890
3	2	68.8	8	1881	1576	574425
4	2	75.4	8	1020	1286	865457
5	1	54.1	8	-	1428	1156782
6	2	74	8	1626	1025	248647
7	3	93.1	8	1325	1708	538124
8	3	92	8	1344	1775	828254
9	1	53.4	8	-	1408	1120994
10	3	86.2	8	1971	1573	212364
11						
12						
13						
14						
15						
16						
17						
18						
19						
20						

DFS Radar Parameters
FCC Radar Type 5
Channel 106 Bandwidth 50MHz

Trial Number:			29			Detection (Yes/No)
Number of Bursts in Trial:			10			
Chirp Center Frequency:			5549.2			Yes
Burst	Number of Pulses	Pulse Width (Microseconds)	Chirp Width (MHz)	Pulse 1-to-2 Spacing (µsec)	Pulse 2-to-3 Spacing (µsec)	Starting Location Within Interval (µsec)
1	2	70.9	7	1001	1498	503336
2	2	68.7	7	1560	1099	793662
3	3	87.4	7	1500	1817	1081855
4	1	65.2	7	-	1222	177319
5	3	99.6	7	1157	1588	467055
6	1	62.1	7	-	1464	758649
7	2	67.6	7	1018	1216	1048657
8	3	89.6	7	1372	1330	141212
9	2	81.1	7	1596	1175	431689
10	1	58	7	-	1236	722980
11						
12						
13						
14						
15						
16						
17						
18						
19						
20						

Trial Number:			30			Detection (Yes/No)
Number of Bursts in Trial:			20			
Chirp Center Frequency:			5544			Yes
Burst	Number of Pulses	Pulse Width (Microseconds)	Chirp Width (MHz)	Pulse 1-to-2 Spacing (µsec)	Pulse 2-to-3 Spacing (µsec)	Starting Location Within Interval (µsec)
1	1	51.4	20	-	1609	506021
2	3	89.7	20	1897	1280	52498
3	3	86.2	20	1794	1855	196772
4	1	58.9	20	-	1581	343032
5	1	52.3	20	-	1809	487982
6	2	79.7	20	1202	1826	34800
7	2	74.1	20	1804	1796	179412
8	1	56.7	20	-	1960	324949
9	1	62.8	20	-	1448	470395
10	2	76.2	20	1323	1777	16963
11	3	83.4	20	1288	1461	161353
12	1	58.5	20	-	1785	307173
13	1	52.5	20	-	1481	452488
14	2	74.6	20	1719	1471	595942
15	2	69.1	20	1294	1943	143865
16	2	80.5	20	1713	1492	288615
17	2	81.1	20	1026	1526	433830
18	1	54.5	20	-	1893	579369
19	2	77.1	20	1108	1355	126201
20	1	51	20	-	1772	271436

Channel 106 Bandwidth 60MHz

Report Number : FZ561115-04A

DFS Radar Parameters
FCC Radar Type 1
Channel 106 Bandwidth 60MHz

Trial #	Pulse Repetition Frequency Number (1 to 23)	Pulse Repetition Frequency (Pulses Per Second)	Pulse Repetition Interval (Microseconds)	Detection (Yes / No)
1	3	1792.11	558	Y
2	12	326.16	3066	Y
3	21	1089.32	918	Y
4	13	1319.26	758	Y
5	10	1432.66	698	Y
6	14	1285.35	778	Y
7	4	1730.10	578	Y
8	7	1567.40	638	Y
9	20	1113.59	898	Y
10	6	1618.12	618	Y
11	5	1672.24	598	Y
12	18	1165.50	858	Y
13	17	1193.32	838	Y
14	1	1930.50	518	Y
15	15	1253.13	798	Y
16		364.56	2743	Y
17		1267.43	789	Y
18		396.67	2521	Y
19		611.62	1635	Y
20		827.13	1209	Y
21		545.85	1832	Y
22		603.14	1658	Y
23		598.80	1670	Y
24		617.67	1619	Y
25		1785.71	560	Y
26		505.82	1977	Y
27		677.05	1477	Y
28		734.75	1361	Y
29		416.49	2401	Y
30		462.96	2160	Y

DFS Radar Parameters
FCC Radar Type 2
Channel 106 Bandwidth 60MHz

Trial #	Number Pulses per Burst	Pulse Width (Microseconds)	Pulse Repetition Interval (Microseconds)	Detection (Yes / No)
1	28	4.40	162	Y
2	28	4.00	187	Y
3	24	1.70	205	Y
4	25	2.60	178	Y
5	23	1.40	218	Y
6	28	4.40	221	Y
7	23	1.30	166	Y
8	28	4.30	159	Y
9	23	1.40	201	Y
10	29	4.90	152	Y
11	24	2.00	195	Y
12	24	1.70	211	Y
13	26	2.90	151	Y
14	23	1.30	207	Y
15	23	1.50	161	Y
16	28	4.20	223	Y
17	26	3.00	180	Y
18	28	3.90	158	Y
19	28	4.10	208	Y
20	27	3.50	198	Y
21	26	3.20	214	Y
22	29	4.80	156	Y
23	25	2.20	202	Y
24	28	4.00	228	Y
25	27	3.80	150	Y
26	27	3.40	190	Y
27	23	1.50	200	Y
28	24	1.80	210	Y
29	24	1.70	197	Y
30	29	5.00	193	Y

DFS Radar Parameters
FCC Radar Type 3
Channel 106 Bandwidth 60MHz

Trial #	Number Pulses per Burst	Pulse Width (Microseconds)	Pulse Repetition Interval (Microseconds)	Detection (Yes / No)
1	18	9.40	250	Y
2	18	9.00	262	Y
3	16	6.70	282	Y
4	17	7.60	419	Y
5	16	6.40	469	Y
6	18	9.40	209	Y
7	16	6.30	268	Y
8	18	9.30	378	Y
9	16	6.40	230	Y
10	18	9.90	257	Y
11	16	7.00	479	Y
12	16	6.70	286	Y
13	17	7.90	433	Y
14	16	6.30	244	Y
15	16	6.50	204	Y
16	18	9.20	369	Y
17	17	8.00	271	Y
18	18	8.90	458	Y
19	18	9.10	267	Y
20	17	8.50	461	Y
21	17	8.20	355	Y
22	18	9.80	329	Y
23	16	7.20	444	Y
24	18	9.00	394	Y
25	18	8.80	440	Y
26	17	8.40	462	Y
27	16	6.50	281	Y
28	16	6.80	298	Y
29	16	6.70	482	Y
30	18	10.00	345	Y

DFS Radar Parameters
FCC Radar Type 4
Channel 106 Bandwidth 60MHz

Trial #	Number Pulses per Burst	Pulse Width (Microseconds)	Pulse Repetition Interval (Microseconds)	Detection (Yes / No)
1	16	18.50	250	Y
2	15	17.80	262	Y
3	12	12.70	282	Y
4	14	14.70	419	Y
5	12	11.80	469	Y
6	16	18.50	209	Y
7	12	11.70	268	Y
8	16	18.40	378	Y
9	12	11.90	230	Y
10	16	19.70	257	Y
11	13	13.30	479	Y
12	12	12.60	286	Y
13	14	15.20	433	Y
14	12	11.80	244	Y
15	12	12.10	204	Y
16	16	18.20	369	Y
17	14	15.60	271	Y
18	15	17.50	458	Y
19	15	17.90	267	Y
20	15	16.60	461	Y
21	14	16.00	355	Y
22	16	19.40	329	Y
23	13	13.70	444	Y
24	15	17.70	394	Y
25	15	17.20	440	Y
26	14	16.30	462	Y
27	12	12.20	281	Y
28	12	12.70	298	Y
29	12	12.60	482	Y
30	16	19.80	345	Y

DFS Radar Parameters
FCC Radar Type 5
Channel 106 Bandwidth 60MHz

Trial Number:			1			Detection (Yes/No)
Number of Bursts in Trial:			18			
Chirp Center Frequency:			5530			Yes
Burst	Number of Pulses	Pulse Width (Microseconds)	Chirp Width (MHz)	Pulse 1-to-2 Spacing (µsec)	Pulse 2-to-3 Spacing (µsec)	Starting Location Within Interval (µsec)
1	3	91.7	18	1598	1174	50049
2	3	87.6	18	1731	1799	210603
3	1	59.6	18	-	1250	373075
4	2	70.6	18	1972	1378	532773
5	1	54.9	18	-	1143	30432
6	3	91.7	18	1295	1603	190978
7	1	54.2	18	-	1793	352908
8	3	90.9	18	1146	1318	512779
9	1	55.3	18	-	1513	10544
10	3	98.2	18	1765	1848	170951
11	1	62.8	18	-	1349	333267
12	1	59	18	-	1393	494595
13	2	73.6	18	1438	1892	654035
14	1	54.5	18	-	1208	152063
15	1	56.2	18	-	1232	313447
16	3	90.1	18	1780	1687	471928
17	2	75.4	18	1086	1055	635355
18	3	85.8	18	1717	1161	131596
19						
20						

Trial Number:			2			Detection (Yes/No)
Number of Bursts in Trial:			17			
Chirp Center Frequency:			5530			Yes
Burst	Number of Pulses	Pulse Width (Microseconds)	Chirp Width (MHz)	Pulse 1-to-2 Spacing (µsec)	Pulse 2-to-3 Spacing (µsec)	Starting Location Within Interval (µsec)
1	3	88.5	17	1292	1124	309787
2	2	81.1	17	1965	1254	480409
3	2	77.7	17	1944	1527	650594
4	3	96.7	17	1176	1394	118400
5	1	65.3	17	-	1760	289600
6	3	86.9	17	1993	1707	458057
7	3	84.2	17	1107	1316	629583
8	2	79.5	17	1229	1205	97699
9	1	56.9	17	-	1614	268620
10	1	59.8	17	-	1776	439327
11	1	58.8	17	-	1907	609981
12	3	98.9	17	1385	1818	76481
13	2	75.7	17	1578	1770	246971
14	2	70.3	17	1329	1081	417915
15	3	92.5	17	1022	1031	587301
16	2	69	17	1556	1305	55635
17	2	68.8	17	1183	1752	226116
18						
19						
20						

DFS Radar Parameters
FCC Radar Type 5
Channel 106 Bandwidth 60MHz

Trial Number:			3			Detection (Yes/No)
Number of Bursts in Trial:			10			
Chirp Center Frequency:			5530			Yes
Burst	Number of Pulses	Pulse Width (Microseconds)	Chirp Width (MHz)	Pulse 1-to-2 Spacing (µsec)	Pulse 2-to-3 Spacing (µsec)	Starting Location Within Interval (µsec)
1	1	52.8	8	-	1386	676257
2	2	71.8	8	1950	1119	965601
3	1	51.5	8	-	1044	59063
4	2	75.9	8	1967	1309	349197
5	3	83.7	8	1133	1273	639336
6	2	81.3	8	1909	1741	929393
7	1	54.5	8	-	1307	23240
8	3	94.4	8	1148	1335	313147
9	2	77.7	8	1640	1434	603790
10	2	78.7	8	1580	1703	893927
11						
12						
13						
14						
15						
16						
17						
18						
19						
20						

Trial Number:			4			Detection (Yes/No)
Number of Bursts in Trial:			13			
Chirp Center Frequency:			5530			Yes
Burst	Number of Pulses	Pulse Width (Microseconds)	Chirp Width (MHz)	Pulse 1-to-2 Spacing (µsec)	Pulse 2-to-3 Spacing (µsec)	Starting Location Within Interval (µsec)
1	1	55	11	-	1439	911974
2	1	55.1	11	-	1427	213865
3	2	68.9	11	1863	1069	436679
4	1	55.1	11	-	1100	661157
5	2	70.7	11	1738	1691	882531
6	2	70.3	11	1941	1135	185997
7	1	52.7	11	-	1819	409686
8	2	79.7	11	1694	1926	631882
9	3	96.4	11	1281	1339	854349
10	3	86.7	11	1851	1510	158145
11	3	95	11	1277	1505	381337
12	2	72.3	11	1027	1924	604854
13	2	72.7	11	1127	1951	827899
14						
15						
16						
17						
18						
19						
20						

DFS Radar Parameters
FCC Radar Type 5
Channel 106 Bandwidth 60MHz

Trial Number:			5			Detection (Yes/No)
Number of Bursts in Trial:			9			
Chirp Center Frequency:			5530			Yes
Burst	Number of Pulses	Pulse Width (Microseconds)	Chirp Width (MHz)	Pulse 1-to-2 Spacing (µsec)	Pulse 2-to-3 Spacing (µsec)	Starting Location Within Interval (µsec)
1	3	86.4	6	1873	1894	189193
2	2	75.4	6	1276	1049	512377
3	3	84.8	6	1682	1059	834157
4	3	94.5	6	1209	1405	1156411
5	2	82	6	1697	1251	149732
6	1	56.5	6	-	1343	472962
7	2	72.5	6	1451	1383	795121
8	3	92.6	6	1869	1249	1116425
9	1	66.6	6	-	1177	110134
10						
11						
12						
13						
14						
15						
16						
17						
18						
19						
20						

Trial Number:			6			Detection (Yes/No)
Number of Bursts in Trial:			18			
Chirp Center Frequency:			5530			Yes
Burst	Number of Pulses	Pulse Width (Microseconds)	Chirp Width (MHz)	Pulse 1-to-2 Spacing (µsec)	Pulse 2-to-3 Spacing (µsec)	Starting Location Within Interval (µsec)
1	1	54.5	18	-	1791	216221
2	3	85.8	18	1582	1103	376357
3	1	53.4	18	-	1415	539032
4	2	68.2	18	1147	1398	35065
5	2	73.9	18	1663	1087	196075
6	1	59.9	18	-	1995	357502
7	1	54.7	18	-	1864	518808
8	3	99.9	18	1068	1243	15187
9	2	73.1	18	1635	1650	176099
10	1	52.3	18	-	1659	337816
11	3	87.7	18	1358	1595	496898
12	1	58.2	18	-	1577	660468
13	2	79.2	18	1507	1043	156454
14	2	74.4	18	1587	1901	317075
15	3	88	18	1646	1834	477028
16	1	54.6	18	-	1955	640235
17	3	88.1	18	1949	1531	136139
18	2	78.5	18	1986	1199	297399
19						
20						

DFS Radar Parameters
FCC Radar Type 5
Channel 106 Bandwidth 60MHz

Trial Number:			7			Detection (Yes/No)
Number of Bursts in Trial:			9			
Chirp Center Frequency:			5530			Yes
Burst	Number of Pulses	Pulse Width (Microseconds)	Chirp Width (MHz)	Pulse 1-to-2 Spacing (µsec)	Pulse 2-to-3 Spacing (µsec)	Starting Location Within Interval (µsec)
1	2	72.9	6	1631	1267	919026
2	3	90.7	6	1801	1571	1239822
3	3	96.2	6	1261	1675	233653
4	2	82.4	6	1575	1073	556712
5	2	73.8	6	1592	1735	878996
6	2	80.6	6	1021	1362	1202418
7	3	99.2	6	1402	1821	193919
8	1	65.1	6	-	1539	517390
9	1	50.4	6	-	1823	840212
10						
11						
12						
13						
14						
15						
16						
17						
18						
19						
20						

Trial Number:			8			Detection (Yes/No)
Number of Bursts in Trial:			18			
Chirp Center Frequency:			5530			Yes
Burst	Number of Pulses	Pulse Width (Microseconds)	Chirp Width (MHz)	Pulse 1-to-2 Spacing (µsec)	Pulse 2-to-3 Spacing (µsec)	Starting Location Within Interval (µsec)
1	3	98.9	18	1568	1769	578194
2	3	86.9	18	1604	1040	76884
3	2	72.5	18	1497	1121	238139
4	3	87.9	18	1651	1956	397608
5	1	55.1	18	-	1129	561501
6	3	86.1	18	1843	1767	57073
7	3	88.4	18	1246	1370	217779
8	1	50.6	18	-	1259	380130
9	2	83.2	18	1425	1164	540430
10	1	51.7	18	-	1616	37467
11	1	52.5	18	-	1404	198826
12	3	96.5	18	1381	1763	358564
13	3	92.9	18	1410	1673	519094
14	2	74.9	18	1820	1753	17547
15	3	96.6	18	1128	1768	178179
16	1	63.5	18	-	1496	340252
17	3	92.7	18	1549	1324	499451
18	3	84.6	18	1032	1257	660696
19						
20						

DFS Radar Parameters
FCC Radar Type 5
Channel 106 Bandwidth 60MHz

Trial Number:			9			Detection (Yes/No)
Number of Bursts in Trial:			9			
Chirp Center Frequency:			5530			Yes
Burst	Number of Pulses	Pulse Width (Microseconds)	Chirp Width (MHz)	Pulse 1-to-2 Spacing (µsec)	Pulse 2-to-3 Spacing (µsec)	Starting Location Within Interval (µsec)
1	1	64.4	6	-	1233	318530
2	1	57.2	6	-	1509	641474
3	1	51	6	-	1561	964446
4	3	96.8	6	1178	1740	1284875
5	3	89.8	6	1679	1532	278070
6	3	94	6	1519	1953	599941
7	2	78.1	6	1488	1546	923637
8	3	99.6	6	1564	1145	1244707
9	1	51.9	6	-	1914	238817
10						
11						
12						
13						
14						
15						
16						
17						
18						
19						
20						

Trial Number:			10			Detection (Yes/No)
Number of Bursts in Trial:			20			
Chirp Center Frequency:			5530			Yes
Burst	Number of Pulses	Pulse Width (Microseconds)	Chirp Width (MHz)	Pulse 1-to-2 Spacing (µsec)	Pulse 2-to-3 Spacing (µsec)	Starting Location Within Interval (µsec)
1	2	70.5	20	1046	1800	251940
2	2	72.2	20	1189	1952	396573
3	1	61.9	20	-	1255	543041
4	2	72.9	20	1258	1132	89340
5	2	69	20	1171	1669	234103
6	1	58.7	20	-	1602	379719
7	1	59.4	20	-	1672	524788
8	1	55.9	20	-	1186	71631
9	1	62.9	20	-	1494	216751
10	1	50.6	20	-	1841	361698
11	1	64.4	20	-	1521	507041
12	2	82.5	20	1377	1712	53571
13	2	72.2	20	1359	1702	198350
14	3	90.8	20	1671	1185	342601
15	2	73.7	20	1942	1097	487921
16	1	54.8	20	-	1123	35857
17	1	52.9	20	-	1880	180874
18	3	85.6	20	1054	1110	324882
19	2	82.1	20	1010	1245	470705
20	2	80.1	20	1052	1446	17924

DFS Radar Parameters
FCC Radar Type 5
Channel 106 Bandwidth 60MHz

Trial Number:			11			Detection (Yes/No)
Number of Bursts in Trial:			11			
Chirp Center Frequency:			5507.6			Yes
Burst	Number of Pulses	Pulse Width (Microseconds)	Chirp Width (MHz)	Pulse 1-to-2 Spacing (µsec)	Pulse 2-to-3 Spacing (µsec)	Starting Location Within Interval (µsec)
1	1	65.8	9	-	1649	296856
2	3	99.7	9	1296	1572	559614
3	2	68.8	9	1101	1983	824129
4	2	81.2	9	1867	1149	135
5	3	96	9	1482	1755	263597
6	3	84.7	9	1411	1963	526731
7	1	57.9	9	-	1886	792503
8	3	99.5	9	1348	1060	1054943
9	1	52.1	9	-	1647	231775
10	3	97.2	9	1538	1689	494560
11	2	78.6	9	1221	1628	759297
12						
13						
14						
15						
16						
17						
18						
19						
20						

Trial Number:			12			Detection (Yes/No)
Number of Bursts in Trial:			10			
Chirp Center Frequency:			5506.8			Yes
Burst	Number of Pulses	Pulse Width (Microseconds)	Chirp Width (MHz)	Pulse 1-to-2 Spacing (µsec)	Pulse 2-to-3 Spacing (µsec)	Starting Location Within Interval (µsec)
1	1	59.7	7	-	1806	1126753
2	1	55.5	7	-	1201	219269
3	3	84.2	7	1982	1779	508390
4	2	67.9	7	1529	1172	799760
5	2	78.4	7	1468	1449	1089946
6	2	71.2	7	1279	1936	183147
7	2	78.8	7	1118	1887	473489
8	3	83.5	7	1829	1957	762178
9	3	87.7	7	1790	1959	1052234
10	3	83.5	7	1678	1282	147263
11						
12						
13						
14						
15						
16						
17						
18						
19						
20						

DFS Radar Parameters
FCC Radar Type 5
Channel 106 Bandwidth 60MHz

Trial Number:			13			Detection (Yes/No)
Number of Bursts in Trial:			14			
Chirp Center Frequency:			5508.8			Yes
Burst	Number of Pulses	Pulse Width (Microseconds)	Chirp Width (MHz)	Pulse 1-to-2 Spacing (µsec)	Pulse 2-to-3 Spacing (µsec)	Starting Location Within Interval (µsec)
1	2	68.9	12	1184	1170	312588
2	3	83.6	12	1431	1217	519111
3	1	62.8	12	-	1191	728204
4	2	78.2	12	1179	1664	79693
5	1	52	12	-	1599	287305
6	3	92.3	12	1743	1459	493101
7	1	66.5	12	-	1291	702550
8	2	77.3	12	1938	1627	54125
9	3	91.9	12	1403	1062	261083
10	3	86.8	12	1016	1384	468140
11	1	58.3	12	-	1017	677199
12	3	96	12	1882	1709	28560
13	2	69.5	12	1742	1512	235731
14	3	86.1	12	1486	1754	442208
15						
16						
17						
18						
19						
20						

Trial Number:			14			Detection (Yes/No)
Number of Bursts in Trial:			9			
Chirp Center Frequency:			5506.4			Yes
Burst	Number of Pulses	Pulse Width (Microseconds)	Chirp Width (MHz)	Pulse 1-to-2 Spacing (µsec)	Pulse 2-to-3 Spacing (µsec)	Starting Location Within Interval (µsec)
1	2	70.9	6	1947	1639	1012111
2	1	53.4	6	-	1992	4874
3	2	80.8	6	1798	1014	327564
4	2	77	6	1622	1534	650090
5	3	84.4	6	1583	1890	971263
6	1	50.8	6	-	1042	1297368
7	1	60	6	-	1730	288050
8	1	53.7	6	-	1747	610998
9	1	65.8	6	-	1991	933779
10						
11						
12						
13						
14						
15						
16						
17						
18						
19						
20						

DFS Radar Parameters
FCC Radar Type 5
Channel 106 Bandwidth 60MHz

Trial Number:			15			Detection (Yes/No)
Number of Bursts in Trial:			9			
Chirp Center Frequency:			5506.8			Yes
Burst	Number of Pulses	Pulse Width (Microseconds)	Chirp Width (MHz)	Pulse 1-to-2 Spacing (µsec)	Pulse 2-to-3 Spacing (µsec)	Starting Location Within Interval (µsec)
1	2	72	7	1397	1095	1256198
2	1	54.6	7	-	1034	248399
3	2	77	7	1012	1457	570908
4	3	88	7	1781	1313	892178
5	2	72.8	7	1827	1594	1215591
6	3	95.4	7	1842	1352	208028
7	3	83.7	7	1196	1751	530298
8	2	74.2	7	1340	1530	853669
9	1	52	7	-	1039	1177967
10						
11						
12						
13						
14						
15						
16						
17						
18						
19						
20						

Trial Number:			16			Detection (Yes/No)
Number of Bursts in Trial:			18			
Chirp Center Frequency:			5510.8			Yes
Burst	Number of Pulses	Pulse Width (Microseconds)	Chirp Width (MHz)	Pulse 1-to-2 Spacing (µsec)	Pulse 2-to-3 Spacing (µsec)	Starting Location Within Interval (µsec)
1	3	94.4	17	1866	1915	83857
2	3	96.7	17	1215	1833	244340
3	3	96.9	17	1470	1490	405152
4	1	66	17	-	1764	568020
5	1	55.9	17	-	1350	64417
6	1	53	17	-	1390	225763
7	3	93.9	17	1562	1569	385114
8	3	92.4	17	1917	1975	545554
9	3	91.4	17	1342	1896	44293
10	2	72.1	17	1061	1996	205373
11	1	60.2	17	-	1160	367366
12	1	60.3	17	-	1987	528116
13	2	70.2	17	1495	1773	24594
14	1	63.8	17	-	1970	185852
15	3	86.1	17	1756	1433	345641
16	3	98.1	17	1058	1778	506322
17	3	97.1	17	1477	1187	4769
18	2	75	17	1655	1447	165712
19						
20						

DFS Radar Parameters
FCC Radar Type 5
Channel 106 Bandwidth 60MHz

Trial Number:			17			Detection (Yes/No)
Number of Bursts in Trial:			14			
Chirp Center Frequency:			5509.2			Yes
Burst	Number of Pulses	Pulse Width (Microseconds)	Chirp Width (MHz)	Pulse 1-to-2 Spacing (µsec)	Pulse 2-to-3 Spacing (µsec)	Starting Location Within Interval (µsec)
1	3	90.5	13	1555	1312	420017
2	1	51.8	13	-	1293	628872
3	3	99.2	13	1000	2000	833226
4	3	86.9	13	1981	1643	187282
5	2	73.4	13	1346	1725	394911
6	1	65.2	13	-	1155	603401
7	2	67.8	13	1945	1345	808983
8	3	90.9	13	1515	1928	161960
9	2	73.5	13	1072	1668	369540
10	2	75.1	13	1937	1721	576140
11	1	54.3	13	-	1802	784840
12	3	93.7	13	1478	1932	136442
13	2	81.9	13	1698	1681	343758
14	1	58.2	13	-	1311	552157
15						
16						
17						
18						
19						
20						

Trial Number:			18			Detection (Yes/No)
Number of Bursts in Trial:			17			
Chirp Center Frequency:			5510.4			Yes
Burst	Number of Pulses	Pulse Width (Microseconds)	Chirp Width (MHz)	Pulse 1-to-2 Spacing (µsec)	Pulse 2-to-3 Spacing (µsec)	Starting Location Within Interval (µsec)
1	1	62.6	16	-	1711	625094
2	1	56.2	16	-	1002	91798
3	1	51.6	16	-	1849	262438
4	2	72.9	16	1958	1341	432297
5	3	89.3	16	1139	1876	601557
6	1	54.8	16	-	1656	70675
7	3	97.5	16	1766	1795	240453
8	2	77.7	16	1140	1662	411598
9	2	83.1	16	1844	1144	581963
10	3	92	16	1710	1067	49457
11	1	59.4	16	-	1934	220347
12	3	87.9	16	1750	1152	389853
13	3	93.6	16	1674	1003	560095
14	1	55.4	16	-	1336	28611
15	1	51.8	16	-	1704	199382
16	3	90.9	16	1252	1736	368865
17	3	91	16	1469	1065	539300
18						
19						
20						

DFS Radar Parameters
FCC Radar Type 5
Channel 106 Bandwidth 60MHz

Trial Number:			19			Detection (Yes/No)
Number of Bursts in Trial:			17			
Chirp Center Frequency:			5510.8			Yes
Burst	Number of Pulses	Pulse Width (Microseconds)	Chirp Width (MHz)	Pulse 1-to-2 Spacing (µsec)	Pulse 2-to-3 Spacing (µsec)	Starting Location Within Interval (µsec)
1	3	89.9	17	1071.000	1224.000	7532
2	2	75.8	17	1159.000	1211.000	178176
3	2	70.4	17	1523.000	1430.000	348511
4	3	93.2	17	1797.000	1761.000	517537
5	2	72.3	17	1333.000	1543.000	689552
6	1	52.9	17	-	1810.000	157284
7	1	57.5	17	-	1919.000	327993
8	2	73.2	17	1458.000	1633.000	497896
9	2	81.7	17	1080.000	1514.000	668818
10	3	98.2	17	1138.000	1112.000	135957
11	1	65.1	17	-	1406.000	307187
12	2	79.5	17	1301.000	1830.000	476874
13	2	68.8	17	1247.000	1306.000	647846
14	3	88.1	17	1541.000	1463.000	114821
15	3	97.8	17	1930.000	1396.000	284733
16	3	90.2	17	1902.000	1166.000	454680
17	1	51.9	17	-	1875.000	627438
18						
19						
20						

Trial Number:			20			Detection (Yes/No)
Number of Bursts in Trial:			16			
Chirp Center Frequency:			5509.6			Yes
Burst	Number of Pulses	Pulse Width (Microseconds)	Chirp Width (MHz)	Pulse 1-to-2 Spacing (µsec)	Pulse 2-to-3 Spacing (µsec)	Starting Location Within Interval (µsec)
1	3	97.7	14	1872	1347	99657
2	1	63.9	14	-	1483	281667
3	1	62.1	14	-	1248	463352
4	1	63.1	14	-	1903	644383
5	1	58.8	14	-	1540	77761
6	3	92.2	14	1878	1939	257841
7	2	77.5	14	1590	1302	440015
8	1	62.7	14	-	1948	621997
9	2	68.7	14	1194	1517	55315
10	1	57.2	14	-	1997	236782
11	2	77.4	14	1784	1625	417407
12	3	85.5	14	1724	1759	597437
13	2	71.6	14	1554	1999	32953
14	1	62.3	14	-	1732	214512
15	3	89	14	1460	1812	394407
16	2	82.6	14	1962	1660	576010
17						
18						
19						
20						

DFS Radar Parameters
FCC Radar Type 5
Channel 106 Bandwidth 60MHz

Trial Number:			21			Detection (Yes/No)
Number of Bursts in Trial:			15			
Chirp Center Frequency:			5550.8			Yes
Burst	Number of Pulses	Pulse Width (Microseconds)	Chirp Width (MHz)	Pulse 1-to-2 Spacing (µsec)	Pulse 2-to-3 Spacing (µsec)	Starting Location Within Interval (µsec)
1	3	84.2	13	1906	1545	11350
2	1	64.4	13	-	1961	204939
3	2	67.9	13	1226	1921	397896
4	1	61.5	13	-	1976	592028
5	1	65	13	-	1131	786406
6	3	90.3	13	1489	1846	180440
7	1	53.3	13	-	1969	374644
8	3	94.2	13	1615	1476	566414
9	3	99.7	13	1748	1094	759412
10	1	57.6	13	-	1839	157281
11	1	56.6	13	-	1837	350862
12	2	82.3	13	1652	1473	543562
13	3	98.2	13	1758	1516	735365
14	1	64.3	13	-	1389	133512
15	1	53.8	13	-	1037	327345
16						
17						
18						
19						
20						

Trial Number:			22			Detection (Yes/No)
Number of Bursts in Trial:			20			
Chirp Center Frequency:			5548.4			Yes
Burst	Number of Pulses	Pulse Width (Microseconds)	Chirp Width (MHz)	Pulse 1-to-2 Spacing (µsec)	Pulse 2-to-3 Spacing (µsec)	Starting Location Within Interval (µsec)
1	1	61.7	19	-	1213	390555
2	3	97.8	19	1413	1455	532608
3	3	91.6	19	1271	1263	81865
4	1	57.8	19	-	1036	227509
5	3	87.9	19	1220	1304	370930
6	2	78.8	19	1544	1693	516141
7	2	77.8	19	1788	1847	64069
8	2	81.1	19	1435	1083	209097
9	3	83.6	19	1813	1256	352652
10	3	92.9	19	1720	1898	497032
11	2	80.5	19	1811	1454	46281
12	1	53.6	19	-	1151	191685
13	3	95.8	19	1366	1723	334930
14	2	80.1	19	1782	1230	480666
15	3	87.7	19	1326	1182	28425
16	1	60	19	-	1737	173625
17	3	85.9	19	1977	1090	317062
18	2	76.2	19	1356	1979	462581
19	3	97	19	1508	1940	10590
20	3	84.7	19	1320	1272	155220

DFS Radar Parameters
FCC Radar Type 5
Channel 106 Bandwidth 60MHz

Trial Number:			23			Detection (Yes/No)
Number of Bursts in Trial:			11			
Chirp Center Frequency:			5552.4			Yes
Burst	Number of Pulses	Pulse Width (Microseconds)	Chirp Width (MHz)	Pulse 1-to-2 Spacing (µsec)	Pulse 2-to-3 Spacing (µsec)	Starting Location Within Interval (µsec)
1	2	73.7	9	1116	1729	547157
2	2	79.9	9	1870	1973	810303
3	2	78.7	9	1692	1057	1075031
4	3	86.9	9	1550	1364	250401
5	1	57.3	9	-	1214	515423
6	1	60.6	9	-	1644	779401
7	2	68	9	1353	1007	1042896
8	1	63.5	9	-	1831	218460
9	1	51.2	9	-	1030	482950
10	3	85.5	9	1814	1141	744899
11	3	95.3	9	1104	1680	1008928
12						
13						
14						
15						
16						
17						
18						
19						
20						

Trial Number:			24			Detection (Yes/No)
Number of Bursts in Trial:			17			
Chirp Center Frequency:			5549.6			Yes
Burst	Number of Pulses	Pulse Width (Microseconds)	Chirp Width (MHz)	Pulse 1-to-2 Spacing (µsec)	Pulse 2-to-3 Spacing (µsec)	Starting Location Within Interval (µsec)
1	1	64.5	16	-	1195	120302
2	1	54.3	16	-	1589	291048
3	1	53.3	16	-	1114	462173
4	1	65.7	16	-	1931	632368
5	3	87.8	16	1367	1690	98774
6	2	80.1	16	1240	1102	269719
7	1	54.5	16	-	1638	440791
8	1	51.1	16	-	1815	611439
9	1	53.7	16	-	1423	78173
10	1	56.3	16	-	1726	248919
11	2	83.3	16	1968	1238	418817
12	3	84.3	16	1695	1567	588294
13	2	68.6	16	1033	1688	57022
14	3	84.6	16	1450	1106	227110
15	3	86.7	16	1327	1874	396805
16	1	57.5	16	-	1920	569287
17	1	64	16	-	1803	36063
18						
19						
20						

DFS Radar Parameters
FCC Radar Type 5
Channel 106 Bandwidth 60MHz

Trial Number:			25			Detection (Yes/No)
Number of Bursts in Trial:			16			
Chirp Center Frequency:			5550			Yes
Burst	Number of Pulses	Pulse Width (Microseconds)	Chirp Width (MHz)	Pulse 1-to-2 Spacing (µsec)	Pulse 2-to-3 Spacing (µsec)	Starting Location Within Interval (µsec)
1	1	62	15	-	1883	219760
2	3	97.6	15	1077	1167	400320
3	2	70.8	15	1024	1860	581864
4	1	56.1	15	-	1601	15975
5	1	51.2	15	-	1290	197567
6	2	79.7	15	1990	1391	378094
7	2	80.1	15	1270	1361	559734
8	2	81.8	15	1706	1908	740020
9	2	69	15	1407	1262	174877
10	1	54.6	15	-	1392	356737
11	1	50.4	15	-	1412	538284
12	2	77.2	15	1832	1718	717784
13	1	60.7	15	-	1998	152688
14	1	64.3	15	-	1015	334541
15	2	79.9	15	1219	1480	515033
16	3	98.1	15	1716	1774	693816
17						
18						
19						
20						

Trial Number:			26			Detection (Yes/No)
Number of Bursts in Trial:			15			
Chirp Center Frequency:			5550.4			Yes
Burst	Number of Pulses	Pulse Width (Microseconds)	Chirp Width (MHz)	Pulse 1-to-2 Spacing (µsec)	Pulse 2-to-3 Spacing (µsec)	Starting Location Within Interval (µsec)
1	3	97.7	14	1705	1314	138675
2	1	65.9	14	-	1048	332991
3	3	99.3	14	1465	1630	524723
4	3	92.4	14	1641	1744	717375
5	1	64.4	14	-	1506	115286
6	3	99.9	14	1076	1484	307804
7	2	80	14	1504	1518	501652
8	2	81.3	14	1093	1700	695144
9	2	75	14	1444	1852	91227
10	3	93.2	14	1988	1585	283689
11	2	78.3	14	1315	1063	478229
12	3	90.4	14	1098	1096	670680
13	3	95.7	14	1636	1749	67308
14	1	60.1	14	-	1499	261239
15	1	52.3	14	-	1440	454935
16						
17						
18						
19						
20						

DFS Radar Parameters
FCC Radar Type 5
Channel 106 Bandwidth 60MHz

Trial Number:			27			Detection (Yes/No)
Number of Bursts in Trial:			9			
Chirp Center Frequency:			5553.2			Yes
Burst	Number of Pulses	Pulse Width (Microseconds)	Chirp Width (MHz)	Pulse 1-to-2 Spacing (µsec)	Pulse 2-to-3 Spacing (µsec)	Starting Location Within Interval (µsec)
1	2	70.7	7	1964	1676	1080011
2	1	53.1	7	-	1351	72934
3	1	54	7	-	1462	395949
4	1	51.4	7	-	1019	719209
5	1	53.6	7	-	1297	1042120
6	1	64.7	7	-	1429	33140
7	3	89.2	7	1134	1284	355428
8	1	63.3	7	-	1409	679208
9	2	74.7	7	1686	1605	1000826
10						
11						
12						
13						
14						
15						
16						
17						
18						
19						
20						

Trial Number:			28			Detection (Yes/No)
Number of Bursts in Trial:			10			
Chirp Center Frequency:			5552.8			Yes
Burst	Number of Pulses	Pulse Width (Microseconds)	Chirp Width (MHz)	Pulse 1-to-2 Spacing (µsec)	Pulse 2-to-3 Spacing (µsec)	Starting Location Within Interval (µsec)
1	2	73.3	8	1006	1871	1191147
2	3	83.9	8	1624	1891	283890
3	2	68.8	8	1881	1576	574425
4	2	75.4	8	1020	1286	865457
5	1	54.1	8	-	1428	1156782
6	2	74	8	1626	1025	248647
7	3	93.1	8	1325	1708	538124
8	3	92	8	1344	1775	828254
9	1	53.4	8	-	1408	1120994
10	3	86.2	8	1971	1573	212364
11						
12						
13						
14						
15						
16						
17						
18						
19						
20						

DFS Radar Parameters
FCC Radar Type 5
Channel 106 Bandwidth 60MHz

Trial Number:			29			Detection (Yes/No)
Number of Bursts in Trial:			10			
Chirp Center Frequency:			5553.2			Yes
Burst	Number of Pulses	Pulse Width (Microseconds)	Chirp Width (MHz)	Pulse 1-to-2 Spacing (µsec)	Pulse 2-to-3 Spacing (µsec)	Starting Location Within Interval (µsec)
1	2	70.9	7	1001	1498	503336
2	2	68.7	7	1560	1099	793662
3	3	87.4	7	1500	1817	1081855
4	1	65.2	7	-	1222	177319
5	3	99.6	7	1157	1588	467055
6	1	62.1	7	-	1464	758649
7	2	67.6	7	1018	1216	1048657
8	3	89.6	7	1372	1330	141212
9	2	81.1	7	1596	1175	431689
10	1	58	7	-	1236	722980
11						
12						
13						
14						
15						
16						
17						
18						
19						
20						

Trial Number:			30			Detection (Yes/No)
Number of Bursts in Trial:			19			
Chirp Center Frequency:			#VALUE!			Yes
Burst	Number of Pulses	Pulse Width (Microseconds)	Chirp Width (MHz)	Pulse 1-to-2 Spacing (µsec)	Pulse 2-to-3 Spacing (µsec)	Starting Location Within Interval (µsec)
1	3	89.7	20	1897	1280	52498
2	3	86.2	20	1794	1855	196772
3	1	58.9	20	-	1581	343032
4	1	52.3	20	-	1809	487982
5	2	79.7	20	1202	1826	34800
6	2	74.1	20	1804	1796	179412
7	1	56.7	20	-	1960	324949
8	1	62.8	20	-	1448	470395
9	2	76.2	20	1323	1777	16963
10	3	83.4	20	1288	1461	161353
11	1	58.5	20	-	1785	307173
12	1	52.5	20	-	1481	452488
13	2	74.6	20	1719	1471	595942
14	2	69.1	20	1294	1943	143865
15	2	80.5	20	1713	1492	288615
16	2	81.1	20	1026	1526	433830
17	1	54.5	20	-	1893	579369
18	2	77.1	20	1108	1355	126201
19	1	51	20	-	1772	271436
20						

Channel 106 Bandwidth 80MHz

Report Number : FZ561115-04A

DFS Radar Parameters
FCC Radar Type 1
Channel 106 Bandwidth 80MHz

Trial #	Pulse Repetition Frequency Number (1 to 23)	Pulse Repetition Frequency (Pulses Per Second)	Pulse Repetition Interval (Microseconds)	Detection (Yes / No)
1	3	1792.11	558	Y
2	12	326.16	3066	Y
3	21	1089.32	918	Y
4	13	1319.26	758	Y
5	10	1432.66	698	Y
6	14	1285.35	778	Y
7	4	1730.10	578	Y
8	7	1567.40	638	Y
9	20	1113.59	898	Y
10	6	1618.12	618	Y
11	5	1672.24	598	Y
12	18	1165.50	858	Y
13	17	1193.32	838	Y
14	1	1930.50	518	Y
15	15	1253.13	798	Y
16		364.56	2743	Y
17		1267.43	789	Y
18		396.67	2521	Y
19		611.62	1635	Y
20		827.13	1209	Y
21		545.85	1832	Y
22		603.14	1658	Y
23		598.80	1670	Y
24		617.67	1619	Y
25		1785.71	560	Y
26		505.82	1977	Y
27		677.05	1477	Y
28		734.75	1361	Y
29		416.49	2401	Y
30		462.96	2160	Y

DFS Radar Parameters
FCC Radar Type 2
Channel 106 Bandwidth 80MHz

Trial #	Number Pulses per Burst	Pulse Width (Microseconds)	Pulse Repetition Interval (Microseconds)	Detection (Yes / No)
1	28	4.40	162	Y
2	28	4.00	187	Y
3	24	1.70	205	Y
4	25	2.60	178	Y
5	23	1.40	218	Y
6	28	4.40	221	Y
7	23	1.30	166	Y
8	28	4.30	159	Y
9	23	1.40	201	Y
10	29	4.90	152	Y
11	24	2.00	195	Y
12	24	1.70	211	Y
13	26	2.90	151	Y
14	23	1.30	207	Y
15	23	1.50	161	Y
16	28	4.20	223	Y
17	26	3.00	180	Y
18	28	3.90	158	Y
19	28	4.10	208	Y
20	27	3.50	198	Y
21	26	3.20	214	Y
22	29	4.80	156	Y
23	25	2.20	202	Y
24	28	4.00	228	Y
25	27	3.80	150	Y
26	27	3.40	190	Y
27	23	1.50	200	Y
28	24	1.80	210	Y
29	24	1.70	197	Y
30	29	5.00	193	Y

DFS Radar Parameters
FCC Radar Type 3
Channel 106 Bandwidth 80MHz

Trial #	Number Pulses per Burst	Pulse Width (Microseconds)	Pulse Repetition Interval (Microseconds)	Detection (Yes / No)
1	18	9.40	250	Y
2	18	9.00	262	Y
3	16	6.70	282	Y
4	17	7.60	419	Y
5	16	6.40	469	Y
6	18	9.40	209	Y
7	16	6.30	268	Y
8	18	9.30	378	Y
9	16	6.40	230	Y
10	18	9.90	257	Y
11	16	7.00	479	Y
12	16	6.70	286	Y
13	17	7.90	433	Y
14	16	6.30	244	Y
15	16	6.50	204	Y
16	18	9.20	369	Y
17	17	8.00	271	Y
18	18	8.90	458	Y
19	18	9.10	267	Y
20	17	8.50	461	Y
21	17	8.20	355	Y
22	18	9.80	329	Y
23	16	7.20	444	Y
24	18	9.00	394	Y
25	18	8.80	440	Y
26	17	8.40	462	Y
27	16	6.50	281	Y
28	16	6.80	298	Y
29	16	6.70	482	Y
30	18	10.00	345	Y

DFS Radar Parameters
FCC Radar Type 4
Channel 106 Bandwidth 80MHz

Trial #	Number Pulses per Burst	Pulse Width (Microseconds)	Pulse Repetition Interval (Microseconds)	Detection (Yes / No)
1	16	18.50	250	Y
2	15	17.80	262	Y
3	12	12.70	282	Y
4	14	14.70	419	Y
5	12	11.80	469	Y
6	16	18.50	209	Y
7	12	11.70	268	Y
8	16	18.40	378	Y
9	12	11.90	230	Y
10	16	19.70	257	Y
11	13	13.30	479	Y
12	12	12.60	286	Y
13	14	15.20	433	Y
14	12	11.80	244	Y
15	12	12.10	204	Y
16	16	18.20	369	Y
17	14	15.60	271	Y
18	15	17.50	458	Y
19	15	17.90	267	Y
20	15	16.60	461	Y
21	14	16.00	355	Y
22	16	19.40	329	Y
23	13	13.70	444	Y
24	15	17.70	394	Y
25	15	17.20	440	Y
26	14	16.30	462	Y
27	12	12.20	281	Y
28	12	12.70	298	Y
29	12	12.60	482	Y
30	16	19.80	345	Y

DFS Radar Parameters
FCC Radar Type 5
Channel 106 Bandwidth 80MHz

Trial Number:			1			Detection (Yes/No)
Number of Bursts in Trial:			18			
Chirp Center Frequency:			5530			Yes
Burst	Number of Pulses	Pulse Width (Microseconds)	Chirp Width (MHz)	Pulse 1-to-2 Spacing (µsec)	Pulse 2-to-3 Spacing (µsec)	Starting Location Within Interval (µsec)
1	3	91.7	18	1598	1174	50049
2	3	87.6	18	1731	1799	210603
3	1	59.6	18	-	1250	373075
4	2	70.6	18	1972	1378	532773
5	1	54.9	18	-	1143	30432
6	3	91.7	18	1295	1603	190978
7	1	54.2	18	-	1793	352908
8	3	90.9	18	1146	1318	512779
9	1	55.3	18	-	1513	10544
10	3	98.2	18	1765	1848	170951
11	1	62.8	18	-	1349	333267
12	1	59	18	-	1393	494595
13	2	73.6	18	1438	1892	654035
14	1	54.5	18	-	1208	152063
15	1	56.2	18	-	1232	313447
16	3	90.1	18	1780	1687	471928
17	2	75.4	18	1086	1055	635355
18	3	85.8	18	1717	1161	131596
19						
20						

Trial Number:			2			Detection (Yes/No)
Number of Bursts in Trial:			17			
Chirp Center Frequency:			5530			Yes
Burst	Number of Pulses	Pulse Width (Microseconds)	Chirp Width (MHz)	Pulse 1-to-2 Spacing (µsec)	Pulse 2-to-3 Spacing (µsec)	Starting Location Within Interval (µsec)
1	3	88.5	17	1292	1124	309787
2	2	81.1	17	1965	1254	480409
3	2	77.7	17	1944	1527	650594
4	3	96.7	17	1176	1394	118400
5	1	65.3	17	-	1760	289600
6	3	86.9	17	1993	1707	458057
7	3	84.2	17	1107	1316	629583
8	2	79.5	17	1229	1205	97699
9	1	56.9	17	-	1614	268620
10	1	59.8	17	-	1776	439327
11	1	58.8	17	-	1907	609981
12	3	98.9	17	1385	1818	76481
13	2	75.7	17	1578	1770	246971
14	2	70.3	17	1329	1081	417915
15	3	92.5	17	1022	1031	587301
16	2	69	17	1556	1305	55635
17	2	68.8	17	1183	1752	226116
18						
19						
20						

DFS Radar Parameters
FCC Radar Type 5
Channel 106 Bandwidth 80MHz

Trial Number:			3			Detection (Yes/No)
Number of Bursts in Trial:			10			
Chirp Center Frequency:			5530			Yes
Burst	Number of Pulses	Pulse Width (Microseconds)	Chirp Width (MHz)	Pulse 1-to-2 Spacing (µsec)	Pulse 2-to-3 Spacing (µsec)	Starting Location Within Interval (µsec)
1	1	52.8	8	-	1386	676257
2	2	71.8	8	1950	1119	965601
3	1	51.5	8	-	1044	59063
4	2	75.9	8	1967	1309	349197
5	3	83.7	8	1133	1273	639336
6	2	81.3	8	1909	1741	929393
7	1	54.5	8	-	1307	23240
8	3	94.4	8	1148	1335	313147
9	2	77.7	8	1640	1434	603790
10	2	78.7	8	1580	1703	893927
11						
12						
13						
14						
15						
16						
17						
18						
19						
20						

Trial Number:			4			Detection (Yes/No)
Number of Bursts in Trial:			13			
Chirp Center Frequency:			5530			Yes
Burst	Number of Pulses	Pulse Width (Microseconds)	Chirp Width (MHz)	Pulse 1-to-2 Spacing (µsec)	Pulse 2-to-3 Spacing (µsec)	Starting Location Within Interval (µsec)
1	1	55	11	-	1439	911974
2	1	55.1	11	-	1427	213865
3	2	68.9	11	1863	1069	436679
4	1	55.1	11	-	1100	661157
5	2	70.7	11	1738	1691	882531
6	2	70.3	11	1941	1135	185997
7	1	52.7	11	-	1819	409686
8	2	79.7	11	1694	1926	631882
9	3	96.4	11	1281	1339	854349
10	3	86.7	11	1851	1510	158145
11	3	95	11	1277	1505	381337
12	2	72.3	11	1027	1924	604854
13	2	72.7	11	1127	1951	827899
14						
15						
16						
17						
18						
19						
20						

DFS Radar Parameters
FCC Radar Type 5
Channel 106 Bandwidth 80MHz

Trial Number:			5			Detection (Yes/No)
Number of Bursts in Trial:			9			
Chirp Center Frequency:			5530			Yes
Burst	Number of Pulses	Pulse Width (Microseconds)	Chirp Width (MHz)	Pulse 1-to-2 Spacing (µsec)	Pulse 2-to-3 Spacing (µsec)	Starting Location Within Interval (µsec)
1	3	86.4	6	1873	1894	189193
2	2	75.4	6	1276	1049	512377
3	3	84.8	6	1682	1059	834157
4	3	94.5	6	1209	1405	1156411
5	2	82	6	1697	1251	149732
6	1	56.5	6	-	1343	472962
7	2	72.5	6	1451	1383	795121
8	3	92.6	6	1869	1249	1116425
9	1	66.6	6	-	1177	110134
10						
11						
12						
13						
14						
15						
16						
17						
18						
19						
20						

Trial Number:			6			Detection (Yes/No)
Number of Bursts in Trial:			18			
Chirp Center Frequency:			5530			Yes
Burst	Number of Pulses	Pulse Width (Microseconds)	Chirp Width (MHz)	Pulse 1-to-2 Spacing (µsec)	Pulse 2-to-3 Spacing (µsec)	Starting Location Within Interval (µsec)
1	1	54.5	18	-	1791	216221
2	3	85.8	18	1582	1103	376357
3	1	53.4	18	-	1415	539032
4	2	68.2	18	1147	1398	35065
5	2	73.9	18	1663	1087	196075
6	1	59.9	18	-	1995	357502
7	1	54.7	18	-	1864	518808
8	3	99.9	18	1068	1243	15187
9	2	73.1	18	1635	1650	176099
10	1	52.3	18	-	1659	337816
11	3	87.7	18	1358	1595	496898
12	1	58.2	18	-	1577	660468
13	2	79.2	18	1507	1043	156454
14	2	74.4	18	1587	1901	317075
15	3	88	18	1646	1834	477028
16	1	54.6	18	-	1955	640235
17	3	88.1	18	1949	1531	136139
18	2	78.5	18	1986	1199	297399
19						
20						

DFS Radar Parameters
FCC Radar Type 5
Channel 106 Bandwidth 80MHz

Trial Number:			7			Detection (Yes/No)
Number of Bursts in Trial:			9			
Chirp Center Frequency:			5530			Yes
Burst	Number of Pulses	Pulse Width (Microseconds)	Chirp Width (MHz)	Pulse 1-to-2 Spacing (µsec)	Pulse 2-to-3 Spacing (µsec)	Starting Location Within Interval (µsec)
1	2	72.9	6	1631	1267	919026
2	3	90.7	6	1801	1571	1239822
3	3	96.2	6	1261	1675	233653
4	2	82.4	6	1575	1073	556712
5	2	73.8	6	1592	1735	878996
6	2	80.6	6	1021	1362	1202418
7	3	99.2	6	1402	1821	193919
8	1	65.1	6	-	1539	517390
9	1	50.4	6	-	1823	840212
10						
11						
12						
13						
14						
15						
16						
17						
18						
19						
20						

Trial Number:			8			Detection (Yes/No)
Number of Bursts in Trial:			18			
Chirp Center Frequency:			5530			Yes
Burst	Number of Pulses	Pulse Width (Microseconds)	Chirp Width (MHz)	Pulse 1-to-2 Spacing (µsec)	Pulse 2-to-3 Spacing (µsec)	Starting Location Within Interval (µsec)
1	3	98.9	18	1568	1769	578194
2	3	86.9	18	1604	1040	76884
3	2	72.5	18	1497	1121	238139
4	3	87.9	18	1651	1956	397608
5	1	55.1	18	-	1129	561501
6	3	86.1	18	1843	1767	57073
7	3	88.4	18	1246	1370	217779
8	1	50.6	18	-	1259	380130
9	2	83.2	18	1425	1164	540430
10	1	51.7	18	-	1616	37467
11	1	52.5	18	-	1404	198826
12	3	96.5	18	1381	1763	358564
13	3	92.9	18	1410	1673	519094
14	2	74.9	18	1820	1753	17547
15	3	96.6	18	1128	1768	178179
16	1	63.5	18	-	1496	340252
17	3	92.7	18	1549	1324	499451
18	3	84.6	18	1032	1257	660696
19						
20						

DFS Radar Parameters
FCC Radar Type 5
Channel 106 Bandwidth 80MHz

Trial Number:			9			Detection (Yes/No)
Number of Bursts in Trial:			9			
Chirp Center Frequency:			5530			Yes
Burst	Number of Pulses	Pulse Width (Microseconds)	Chirp Width (MHz)	Pulse 1-to-2 Spacing (µsec)	Pulse 2-to-3 Spacing (µsec)	Starting Location Within Interval (µsec)
1	1	64.4	6	-	1233	318530
2	1	57.2	6	-	1509	641474
3	1	51	6	-	1561	964446
4	3	96.8	6	1178	1740	1284875
5	3	89.8	6	1679	1532	278070
6	3	94	6	1519	1953	599941
7	2	78.1	6	1488	1546	923637
8	3	99.6	6	1564	1145	1244707
9	1	51.9	6	-	1914	238817
10						
11						
12						
13						
14						
15						
16						
17						
18						
19						
20						

Trial Number:			10			Detection (Yes/No)
Number of Bursts in Trial:			20			
Chirp Center Frequency:			5530			Yes
Burst	Number of Pulses	Pulse Width (Microseconds)	Chirp Width (MHz)	Pulse 1-to-2 Spacing (µsec)	Pulse 2-to-3 Spacing (µsec)	Starting Location Within Interval (µsec)
1	2	70.5	20	1046	1800	251940
2	2	72.2	20	1189	1952	396573
3	1	61.9	20	-	1255	543041
4	2	72.9	20	1258	1132	89340
5	2	69	20	1171	1669	234103
6	1	58.7	20	-	1602	379719
7	1	59.4	20	-	1672	524788
8	1	55.9	20	-	1186	71631
9	1	62.9	20	-	1494	216751
10	1	50.6	20	-	1841	361698
11	1	64.4	20	-	1521	507041
12	2	82.5	20	1377	1712	53571
13	2	72.2	20	1359	1702	198350
14	3	90.8	20	1671	1185	342601
15	2	73.7	20	1942	1097	487921
16	1	54.8	20	-	1123	35857
17	1	52.9	20	-	1880	180874
18	3	85.6	20	1054	1110	324882
19	2	82.1	20	1010	1245	470705
20	2	80.1	20	1052	1446	17924

DFS Radar Parameters
FCC Radar Type 5
Channel 106 Bandwidth 80MHz

Trial Number:			11			Detection (Yes/No)
Number of Bursts in Trial:			11			
Chirp Center Frequency:			5495.6			Yes
Burst	Number of Pulses	Pulse Width (Microseconds)	Chirp Width (MHz)	Pulse 1-to-2 Spacing (µsec)	Pulse 2-to-3 Spacing (µsec)	Starting Location Within Interval (µsec)
1	1	65.8	9	-	1649	296856
2	3	99.7	9	1296	1572	559614
3	2	68.8	9	1101	1983	824129
4	2	81.2	9	1867	1149	135
5	3	96	9	1482	1755	263597
6	3	84.7	9	1411	1963	526731
7	1	57.9	9	-	1886	792503
8	3	99.5	9	1348	1060	1054943
9	1	52.1	9	-	1647	231775
10	3	97.2	9	1538	1689	494560
11	2	78.6	9	1221	1628	759297
12						
13						
14						
15						
16						
17						
18						
19						
20						

Trial Number:			12			Detection (Yes/No)
Number of Bursts in Trial:			10			
Chirp Center Frequency:			5494.8			Yes
Burst	Number of Pulses	Pulse Width (Microseconds)	Chirp Width (MHz)	Pulse 1-to-2 Spacing (µsec)	Pulse 2-to-3 Spacing (µsec)	Starting Location Within Interval (µsec)
1	1	59.7	7	-	1806	1126753
2	1	55.5	7	-	1201	219269
3	3	84.2	7	1982	1779	508390
4	2	67.9	7	1529	1172	799760
5	2	78.4	7	1468	1449	1089946
6	2	71.2	7	1279	1936	183147
7	2	78.8	7	1118	1887	473489
8	3	83.5	7	1829	1957	762178
9	3	87.7	7	1790	1959	1052234
10	3	83.5	7	1678	1282	147263
11						
12						
13						
14						
15						
16						
17						
18						
19						
20						

DFS Radar Parameters
FCC Radar Type 5
Channel 106 Bandwidth 80MHz

Trial Number:			13			Detection (Yes/No)
Number of Bursts in Trial:			14			
Chirp Center Frequency:			5496.8			Yes
Burst	Number of Pulses	Pulse Width (Microseconds)	Chirp Width (MHz)	Pulse 1-to-2 Spacing (µsec)	Pulse 2-to-3 Spacing (µsec)	Starting Location Within Interval (µsec)
1	2	68.9	12	1184	1170	312588
2	3	83.6	12	1431	1217	519111
3	1	62.8	12	-	1191	728204
4	2	78.2	12	1179	1664	79693
5	1	52	12	-	1599	287305
6	3	92.3	12	1743	1459	493101
7	1	66.5	12	-	1291	702550
8	2	77.3	12	1938	1627	54125
9	3	91.9	12	1403	1062	261083
10	3	86.8	12	1016	1384	468140
11	1	58.3	12	-	1017	677199
12	3	96	12	1882	1709	28560
13	2	69.5	12	1742	1512	235731
14	3	86.1	12	1486	1754	442208
15						
16						
17						
18						
19						
20						

Trial Number:			14			Detection (Yes/No)
Number of Bursts in Trial:			9			
Chirp Center Frequency:			5494.4			Yes
Burst	Number of Pulses	Pulse Width (Microseconds)	Chirp Width (MHz)	Pulse 1-to-2 Spacing (µsec)	Pulse 2-to-3 Spacing (µsec)	Starting Location Within Interval (µsec)
1	2	70.9	6	1947	1639	1012111
2	1	53.4	6	-	1992	4874
3	2	80.8	6	1798	1014	327564
4	2	77	6	1622	1534	650090
5	3	84.4	6	1583	1890	971263
6	1	50.8	6	-	1042	1297368
7	1	60	6	-	1730	288050
8	1	53.7	6	-	1747	610998
9	1	65.8	6	-	1991	933779
10						
11						
12						
13						
14						
15						
16						
17						
18						
19						
20						

DFS Radar Parameters
FCC Radar Type 5
Channel 106 Bandwidth 80MHz

Trial Number:			15			Detection (Yes/No)
Number of Bursts in Trial:			9			
Chirp Center Frequency:			5494.8			Yes
Burst	Number of Pulses	Pulse Width (Microseconds)	Chirp Width (MHz)	Pulse 1-to-2 Spacing (µsec)	Pulse 2-to-3 Spacing (µsec)	Starting Location Within Interval (µsec)
1	2	72	7	1397	1095	1256198
2	1	54.6	7	-	1034	248399
3	2	77	7	1012	1457	570908
4	3	88	7	1781	1313	892178
5	2	72.8	7	1827	1594	1215591
6	3	95.4	7	1842	1352	208028
7	3	83.7	7	1196	1751	530298
8	2	74.2	7	1340	1530	853669
9	1	52	7	-	1039	1177967
10						
11						
12						
13						
14						
15						
16						
17						
18						
19						
20						

Trial Number:			16			Detection (Yes/No)
Number of Bursts in Trial:			18			
Chirp Center Frequency:			5498.8			Yes
Burst	Number of Pulses	Pulse Width (Microseconds)	Chirp Width (MHz)	Pulse 1-to-2 Spacing (µsec)	Pulse 2-to-3 Spacing (µsec)	Starting Location Within Interval (µsec)
1	3	94.4	17	1866	1915	83857
2	3	96.7	17	1215	1833	244340
3	3	96.9	17	1470	1490	405152
4	1	66	17	-	1764	568020
5	1	55.9	17	-	1350	64417
6	1	53	17	-	1390	225763
7	3	93.9	17	1562	1569	385114
8	3	92.4	17	1917	1975	545554
9	3	91.4	17	1342	1896	44293
10	2	72.1	17	1061	1996	205373
11	1	60.2	17	-	1160	367366
12	1	60.3	17	-	1987	528116
13	2	70.2	17	1495	1773	24594
14	1	63.8	17	-	1970	185852
15	3	86.1	17	1756	1433	345641
16	3	98.1	17	1058	1778	506322
17	3	97.1	17	1477	1187	4769
18	2	75	17	1655	1447	165712
19						
20						

DFS Radar Parameters
FCC Radar Type 5
Channel 106 Bandwidth 80MHz

Trial Number:			17			Detection (Yes/No)
Number of Bursts in Trial:			14			
Chirp Center Frequency:			5497.2			Yes
Burst	Number of Pulses	Pulse Width (Microseconds)	Chirp Width (MHz)	Pulse 1-to-2 Spacing (µsec)	Pulse 2-to-3 Spacing (µsec)	Starting Location Within Interval (µsec)
1	3	90.5	13	1555	1312	420017
2	1	51.8	13	-	1293	628872
3	3	99.2	13	1000	2000	833226
4	3	86.9	13	1981	1643	187282
5	2	73.4	13	1346	1725	394911
6	1	65.2	13	-	1155	603401
7	2	67.8	13	1945	1345	808983
8	3	90.9	13	1515	1928	161960
9	2	73.5	13	1072	1668	369540
10	2	75.1	13	1937	1721	576140
11	1	54.3	13	-	1802	784840
12	3	93.7	13	1478	1932	136442
13	2	81.9	13	1698	1681	343758
14	1	58.2	13	-	1311	552157
15						
16						
17						
18						
19						
20						

Trial Number:			18			Detection (Yes/No)
Number of Bursts in Trial:			17			
Chirp Center Frequency:			5498.4			Yes
Burst	Number of Pulses	Pulse Width (Microseconds)	Chirp Width (MHz)	Pulse 1-to-2 Spacing (µsec)	Pulse 2-to-3 Spacing (µsec)	Starting Location Within Interval (µsec)
1	1	62.6	16	-	1711	625094
2	1	56.2	16	-	1002	91798
3	1	51.6	16	-	1849	262438
4	2	72.9	16	1958	1341	432297
5	3	89.3	16	1139	1876	601557
6	1	54.8	16	-	1656	70675
7	3	97.5	16	1766	1795	240453
8	2	77.7	16	1140	1662	411598
9	2	83.1	16	1844	1144	581963
10	3	92	16	1710	1067	49457
11	1	59.4	16	-	1934	220347
12	3	87.9	16	1750	1152	389853
13	3	93.6	16	1674	1003	560095
14	1	55.4	16	-	1336	28611
15	1	51.8	16	-	1704	199382
16	3	90.9	16	1252	1736	368865
17	3	91	16	1469	1065	539300
18						
19						
20						

DFS Radar Parameters
FCC Radar Type 5
Channel 106 Bandwidth 80MHz

Trial Number:			19			Detection (Yes/No)
Number of Bursts in Trial:			17			
Chirp Center Frequency:			5498.8			Yes
Burst	Number of Pulses	Pulse Width (Microseconds)	Chirp Width (MHz)	Pulse 1-to-2 Spacing (µsec)	Pulse 2-to-3 Spacing (µsec)	Starting Location Within Interval (µsec)
1	3	89.9	17	1071.000	1224.000	7532
2	2	75.8	17	1159.000	1211.000	178176
3	2	70.4	17	1523.000	1430.000	348511
4	3	93.2	17	1797.000	1761.000	517537
5	2	72.3	17	1333.000	1543.000	689552
6	1	52.9	17	-	1810.000	157284
7	1	57.5	17	-	1919.000	327993
8	2	73.2	17	1458.000	1633.000	497896
9	2	81.7	17	1080.000	1514.000	668818
10	3	98.2	17	1138.000	1112.000	135957
11	1	65.1	17	-	1406.000	307187
12	2	79.5	17	1301.000	1830.000	476874
13	2	68.8	17	1247.000	1306.000	647846
14	3	88.1	17	1541.000	1463.000	114821
15	3	97.8	17	1930.000	1396.000	284733
16	3	90.2	17	1902.000	1166.000	454680
17	1	51.9	17	-	1875.000	627438
18						
19						
20						

Trial Number:			20			Detection (Yes/No)
Number of Bursts in Trial:			16			
Chirp Center Frequency:			5497.6			Yes
Burst	Number of Pulses	Pulse Width (Microseconds)	Chirp Width (MHz)	Pulse 1-to-2 Spacing (µsec)	Pulse 2-to-3 Spacing (µsec)	Starting Location Within Interval (µsec)
1	3	97.7	14	1872	1347	99657
2	1	63.9	14	-	1483	281667
3	1	62.1	14	-	1248	463352
4	1	63.1	14	-	1903	644383
5	1	58.8	14	-	1540	77761
6	3	92.2	14	1878	1939	257841
7	2	77.5	14	1590	1302	440015
8	1	62.7	14	-	1948	621997
9	2	68.7	14	1194	1517	55315
10	1	57.2	14	-	1997	236782
11	2	77.4	14	1784	1625	417407
12	3	85.5	14	1724	1759	597437
13	2	71.6	14	1554	1999	32953
14	1	62.3	14	-	1732	214512
15	3	89	14	1460	1812	394407
16	2	82.6	14	1962	1660	576010
17						
18						
19						
20						

DFS Radar Parameters
FCC Radar Type 5
Channel 106 Bandwidth 80MHz

Trial Number:			21			Detection (Yes/No)
Number of Bursts in Trial:			15			
Chirp Center Frequency:			5562.8			Yes
Burst	Number of Pulses	Pulse Width (Microseconds)	Chirp Width (MHz)	Pulse 1-to-2 Spacing (µsec)	Pulse 2-to-3 Spacing (µsec)	Starting Location Within Interval (µsec)
1	3	84.2	13	1906	1545	11350
2	1	64.4	13	-	1961	204939
3	2	67.9	13	1226	1921	397896
4	1	61.5	13	-	1976	592028
5	1	65	13	-	1131	786406
6	3	90.3	13	1489	1846	180440
7	1	53.3	13	-	1969	374644
8	3	94.2	13	1615	1476	566414
9	3	99.7	13	1748	1094	759412
10	1	57.6	13	-	1839	157281
11	1	56.6	13	-	1837	350862
12	2	82.3	13	1652	1473	543562
13	3	98.2	13	1758	1516	735365
14	1	64.3	13	-	1389	133512
15	1	53.8	13	-	1037	327345
16						
17						
18						
19						
20						

Trial Number:			22			Detection (Yes/No)
Number of Bursts in Trial:			20			
Chirp Center Frequency:			5560.4			Yes
Burst	Number of Pulses	Pulse Width (Microseconds)	Chirp Width (MHz)	Pulse 1-to-2 Spacing (µsec)	Pulse 2-to-3 Spacing (µsec)	Starting Location Within Interval (µsec)
1	1	61.7	19	-	1213	390555
2	3	97.8	19	1413	1455	532608
3	3	91.6	19	1271	1263	81865
4	1	57.8	19	-	1036	227509
5	3	87.9	19	1220	1304	370930
6	2	78.8	19	1544	1693	516141
7	2	77.8	19	1788	1847	64069
8	2	81.1	19	1435	1083	209097
9	3	83.6	19	1813	1256	352652
10	3	92.9	19	1720	1898	497032
11	2	80.5	19	1811	1454	46281
12	1	53.6	19	-	1151	191685
13	3	95.8	19	1366	1723	334930
14	2	80.1	19	1782	1230	480666
15	3	87.7	19	1326	1182	28425
16	1	60	19	-	1737	173625
17	3	85.9	19	1977	1090	317062
18	2	76.2	19	1356	1979	462581
19	3	97	19	1508	1940	10590
20	3	84.7	19	1320	1272	155220

DFS Radar Parameters
FCC Radar Type 5
Channel 106 Bandwidth 80MHz

Trial Number:			23			Detection (Yes/No)
Number of Bursts in Trial:			11			
Chirp Center Frequency:			5564.4			Yes
Burst	Number of Pulses	Pulse Width (Microseconds)	Chirp Width (MHz)	Pulse 1-to-2 Spacing (µsec)	Pulse 2-to-3 Spacing (µsec)	Starting Location Within Interval (µsec)
1	2	73.7	9	1116	1729	547157
2	2	79.9	9	1870	1973	810303
3	2	78.7	9	1692	1057	1075031
4	3	86.9	9	1550	1364	250401
5	1	57.3	9	-	1214	515423
6	1	60.6	9	-	1644	779401
7	2	68	9	1353	1007	1042896
8	1	63.5	9	-	1831	218460
9	1	51.2	9	-	1030	482950
10	3	85.5	9	1814	1141	744899
11	3	95.3	9	1104	1680	1008928
12						
13						
14						
15						
16						
17						
18						
19						
20						

Trial Number:			24			Detection (Yes/No)
Number of Bursts in Trial:			17			
Chirp Center Frequency:			5561.6			Yes
Burst	Number of Pulses	Pulse Width (Microseconds)	Chirp Width (MHz)	Pulse 1-to-2 Spacing (µsec)	Pulse 2-to-3 Spacing (µsec)	Starting Location Within Interval (µsec)
1	1	64.5	16	-	1195	120302
2	1	54.3	16	-	1589	291048
3	1	53.3	16	-	1114	462173
4	1	65.7	16	-	1931	632368
5	3	87.8	16	1367	1690	98774
6	2	80.1	16	1240	1102	269719
7	1	54.5	16	-	1638	440791
8	1	51.1	16	-	1815	611439
9	1	53.7	16	-	1423	78173
10	1	56.3	16	-	1726	248919
11	2	83.3	16	1968	1238	418817
12	3	84.3	16	1695	1567	588294
13	2	68.6	16	1033	1688	57022
14	3	84.6	16	1450	1106	227110
15	3	86.7	16	1327	1874	396805
16	1	57.5	16	-	1920	569287
17	1	64	16	-	1803	36063
18						
19						
20						

DFS Radar Parameters
FCC Radar Type 5
Channel 106 Bandwidth 80MHz

Trial Number:			25			Detection (Yes/No)
Number of Bursts in Trial:			16			
Chirp Center Frequency:			5562			Yes
Burst	Number of Pulses	Pulse Width (Microseconds)	Chirp Width (MHz)	Pulse 1-to-2 Spacing (µsec)	Pulse 2-to-3 Spacing (µsec)	Starting Location Within Interval (µsec)
1	1	62	15	-	1883	219760
2	3	97.6	15	1077	1167	400320
3	2	70.8	15	1024	1860	581864
4	1	56.1	15	-	1601	15975
5	1	51.2	15	-	1290	197567
6	2	79.7	15	1990	1391	378094
7	2	80.1	15	1270	1361	559734
8	2	81.8	15	1706	1908	740020
9	2	69	15	1407	1262	174877
10	1	54.6	15	-	1392	356737
11	1	50.4	15	-	1412	538284
12	2	77.2	15	1832	1718	717784
13	1	60.7	15	-	1998	152688
14	1	64.3	15	-	1015	334541
15	2	79.9	15	1219	1480	515033
16	3	98.1	15	1716	1774	693816
17						
18						
19						
20						

Trial Number:			26			Detection (Yes/No)
Number of Bursts in Trial:			15			
Chirp Center Frequency:			5562.4			Yes
Burst	Number of Pulses	Pulse Width (Microseconds)	Chirp Width (MHz)	Pulse 1-to-2 Spacing (µsec)	Pulse 2-to-3 Spacing (µsec)	Starting Location Within Interval (µsec)
1	3	97.7	14	1705	1314	138675
2	1	65.9	14	-	1048	332991
3	3	99.3	14	1465	1630	524723
4	3	92.4	14	1641	1744	717375
5	1	64.4	14	-	1506	115286
6	3	99.9	14	1076	1484	307804
7	2	80	14	1504	1518	501652
8	2	81.3	14	1093	1700	695144
9	2	75	14	1444	1852	91227
10	3	93.2	14	1988	1585	283689
11	2	78.3	14	1315	1063	478229
12	3	90.4	14	1098	1096	670680
13	3	95.7	14	1636	1749	67308
14	1	60.1	14	-	1499	261239
15	1	52.3	14	-	1440	454935
16						
17						
18						
19						
20						

DFS Radar Parameters
FCC Radar Type 5
Channel 106 Bandwidth 80MHz

Trial Number:			27			Detection (Yes/No)
Number of Bursts in Trial:			9			
Chirp Center Frequency:			5565.2			Yes
Burst	Number of Pulses	Pulse Width (Microseconds)	Chirp Width (MHz)	Pulse 1-to-2 Spacing (µsec)	Pulse 2-to-3 Spacing (µsec)	Starting Location Within Interval (µsec)
1	2	70.7	7	1964	1676	1080011
2	1	53.1	7	-	1351	72934
3	1	54	7	-	1462	395949
4	1	51.4	7	-	1019	719209
5	1	53.6	7	-	1297	1042120
6	1	64.7	7	-	1429	33140
7	3	89.2	7	1134	1284	355428
8	1	63.3	7	-	1409	679208
9	2	74.7	7	1686	1605	1000826
10						
11						
12						
13						
14						
15						
16						
17						
18						
19						
20						

Trial Number:			28			Detection (Yes/No)
Number of Bursts in Trial:			10			
Chirp Center Frequency:			5564.8			Yes
Burst	Number of Pulses	Pulse Width (Microseconds)	Chirp Width (MHz)	Pulse 1-to-2 Spacing (µsec)	Pulse 2-to-3 Spacing (µsec)	Starting Location Within Interval (µsec)
1	2	73.3	8	1006	1871	1191147
2	3	83.9	8	1624	1891	283890
3	2	68.8	8	1881	1576	574425
4	2	75.4	8	1020	1286	865457
5	1	54.1	8	-	1428	1156782
6	2	74	8	1626	1025	248647
7	3	93.1	8	1325	1708	538124
8	3	92	8	1344	1775	828254
9	1	53.4	8	-	1408	1120994
10	3	86.2	8	1971	1573	212364
11						
12						
13						
14						
15						
16						
17						
18						
19						
20						

DFS Radar Parameters
FCC Radar Type 5
Channel 106 Bandwidth 80MHz

Trial Number:			29			Detection (Yes/No)
Number of Bursts in Trial:			10			
Chirp Center Frequency:			5565.2			Yes
Burst	Number of Pulses	Pulse Width (Microseconds)	Chirp Width (MHz)	Pulse 1-to-2 Spacing (µsec)	Pulse 2-to-3 Spacing (µsec)	Starting Location Within Interval (µsec)
1	2	70.9	7	1001	1498	503336
2	2	68.7	7	1560	1099	793662
3	3	87.4	7	1500	1817	1081855
4	1	65.2	7	-	1222	177319
5	3	99.6	7	1157	1588	467055
6	1	62.1	7	-	1464	758649
7	2	67.6	7	1018	1216	1048657
8	3	89.6	7	1372	1330	141212
9	2	81.1	7	1596	1175	431689
10	1	58	7	-	1236	722980
11						
12						
13						
14						
15						
16						
17						
18						
19						
20						

Trial Number:			30			Detection (Yes/No)
Number of Bursts in Trial:			20			
Chirp Center Frequency:			5560			Yes
Burst	Number of Pulses	Pulse Width (Microseconds)	Chirp Width (MHz)	Pulse 1-to-2 Spacing (µsec)	Pulse 2-to-3 Spacing (µsec)	Starting Location Within Interval (µsec)
1	1	51.4	20	-	1609	506021
2	3	89.7	20	1897	1280	52498
3	3	86.2	20	1794	1855	196772
4	1	58.9	20	-	1581	343032
5	1	52.3	20	-	1809	487982
6	2	79.7	20	1202	1826	34800
7	2	74.1	20	1804	1796	179412
8	1	56.7	20	-	1960	324949
9	1	62.8	20	-	1448	470395
10	2	76.2	20	1323	1777	16963
11	3	83.4	20	1288	1461	161353
12	1	58.5	20	-	1785	307173
13	1	52.5	20	-	1481	452488
14	2	74.6	20	1719	1471	595942
15	2	69.1	20	1294	1943	143865
16	2	80.5	20	1713	1492	288615
17	2	81.1	20	1026	1526	433830
18	1	54.5	20	-	1893	579369
19	2	77.1	20	1108	1355	126201
20	1	51	20	-	1772	271436