UBIQUITI®
NETWORKS

PowerBeam® ac

High-Performance Integrated InnerFeed® airMAX® ac Bridge

Model: PBE-5AC620

Quick Start Guide

Introduction

Thank you for purchasing the Ubiquiti Networks® PowerBeam® ac. This Quick Start Guide is designed to guide you through installation and also includes warranty terms.

Package Contents

Dish Reflector with Mounting Bracket

Antenna Feed

Rear Housing

Support Arm

Upper Pole Bracket Assembly

Lower Pole Bracket

Brace

Screws (M6, Qty. 4)

Hex Head Bolts (M8, Qty. 5)

Lock Washers (M8, Qty. 5)

Flat Washers (M8, Qty. 5)

Stabilizer Brackets (Qty. 2)

M10x100 Bolts (Qty. 2)

Serrated Flange Nuts (M10, Qty. 2)

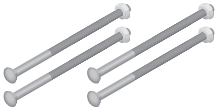

M8x150 Carriage Bolts (Qty. 4)

Pole Clamps (Qty. 2)

Gigabit PoE Adapter with Wall-Mount Bracket

Power Cord

Quick Start Guide

TERMS OF USE: Ubiquiti radio devices must be professionally installed. Shielded Ethernet cable and earth grounding must be used as conditions of product warranty. TOUGHCable™ is designed for outdoor installations. It is the customer's responsibility to follow local country regulations, including operation within legal frequency channels, output power, and Dynamic Frequency Selection (DFS) requirements.

Hardware Overview

Bottom View

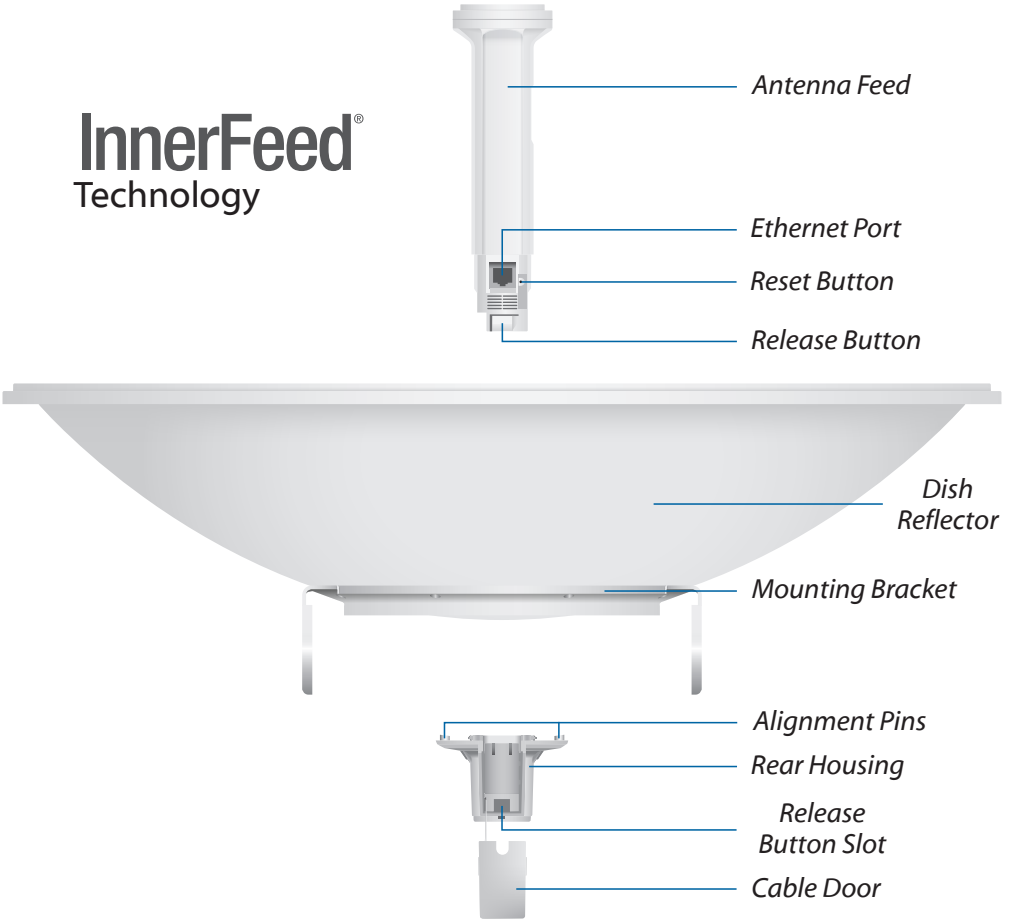

Reset Button To reset to factory defaults, press and hold the *Reset* button for more than 10 seconds while the PowerBeam is already powered on. Alternatively, the PowerBeam may be reset remotely via a *Reset* button located on the bottom of the *Gigabit PoE Adapter*.

Release Button After you assemble the PowerBeam, check the *Release* button; it should be fully engaged in the *Release Button Slot* of the *Rear Housing*. This ensures that the *Antenna Feed* is locked into place. If you need to remove the *Antenna Feed*, you must depress the *Release* button first.

LEDs

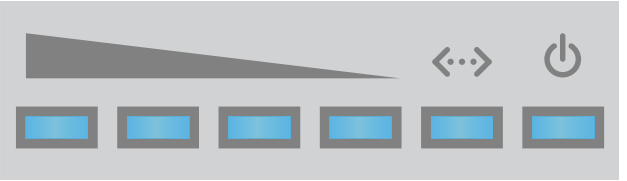

Signal The default values (from left to right) are shown below:

- LED will light blue when the wireless signal strength is equal to or above -65 dBm.
- LED will light blue when the wireless signal strength is equal to or above -73 dBm.
- LED will light blue when the wireless signal strength is equal to or above -80 dBm.
- LED will light blue when the wireless signal strength is equal to or above -94 dBm.

Ethernet The Ethernet LED will light steady blue when an active Ethernet connection is made and flash when there is activity.

Power The Power LED will light blue when the device is connected to a power source.

Application Examples

The PowerBeam mounted outdoors with the *Dish Reflector* installed provides directional outdoor coverage. (The gain depends on the reflector.)

The PowerBeam mounted outdoors without the *Dish Reflector* installed provides outdoor-to-indoor coverage using the 3 dBi *Antenna Feed* only.

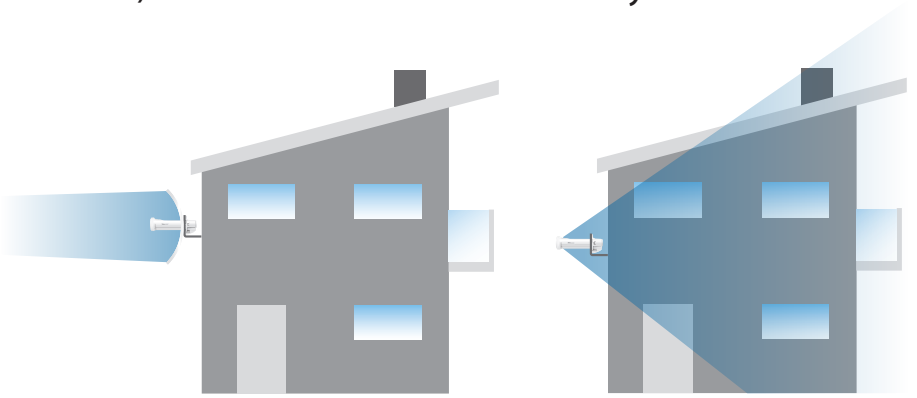

Installation Requirements

- Phillips screwdriver
- 13 mm wrench
- 16 mm wrench
- Shielded Category 5 (or above) cabling should be used for all wired Ethernet connections and should be grounded through the AC ground of the PoE.

  We recommend that you protect your networks from the most brutal environments and devastating ESD attacks with industrial-grade shielded Ethernet cable from Ubiquiti Networks. For more details, visit **www.ubnt.com/toughcable**

Installation

1. Line up the *Alignment Pins* of the *Rear Housing* with the alignment holes of the *Dish Reflector*. Insert the pins and push until they lock into place.

2. Push in the sides of the *Cable Door* and detach it from the *Rear Housing*.

3. Attach the *Antenna Feed*:
   a. Insert the *Antenna Feed* into the *Rear Housing*, and push until it locks into place with a click.
   b. Lightly pull the *Antenna Feed* to ensure that it is locked into place and the *Release* button is fully engaged.

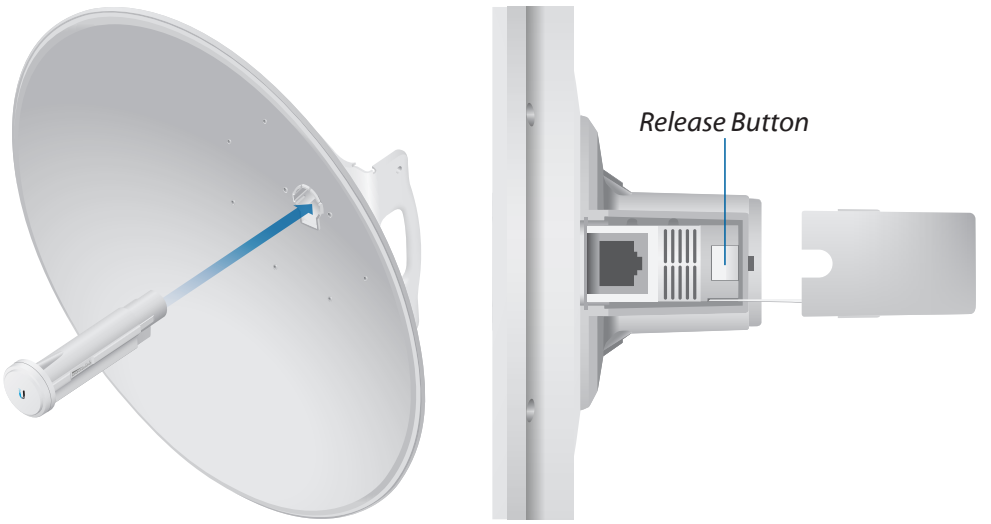

Bottom View

4. Connect the Ethernet cable:
   a. Connect an Ethernet cable to the *Ethernet Port* of the *Antenna Feed*.
   b. Re-attach the *Cable Door* to the *Rear Housing*.

5. Attach two *Hex Head Bolts*, two *Lock Washers*, and two *Flat Washers* to the bottom of the *Mounting Bracket*. Ensure that there is a gap of 8 mm between each *Flat Washer* and the *Mounting Bracket*.

Note: Ensure that each *Lock Washer* is always installed between the *Hex Head Bolt* and *Flat Washer*.

6. Attach the horizontal slot of the *Support Arm* to the *Upper Pole Bracket* using a *Hex Head Bolt*, *Lock Washer*, and *Flat Washer*.

Note: Ensure that the degree settings are the same on both arms of the *Upper Pole Bracket*.

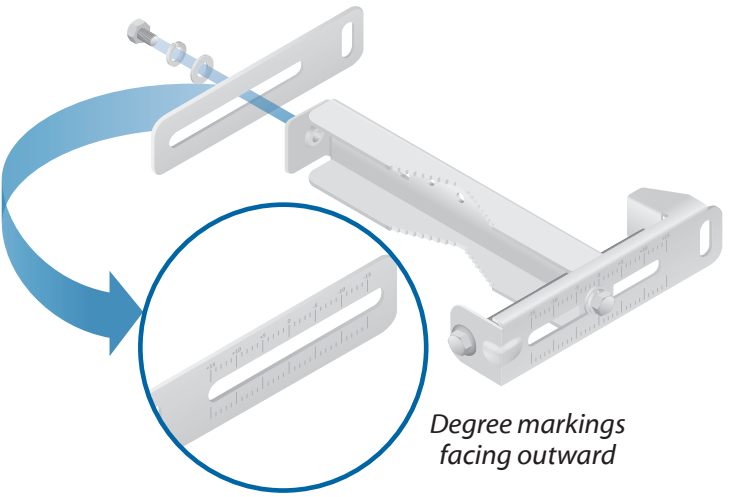

7. Attach the *Brace* to the pole brackets using the four *Screws*.

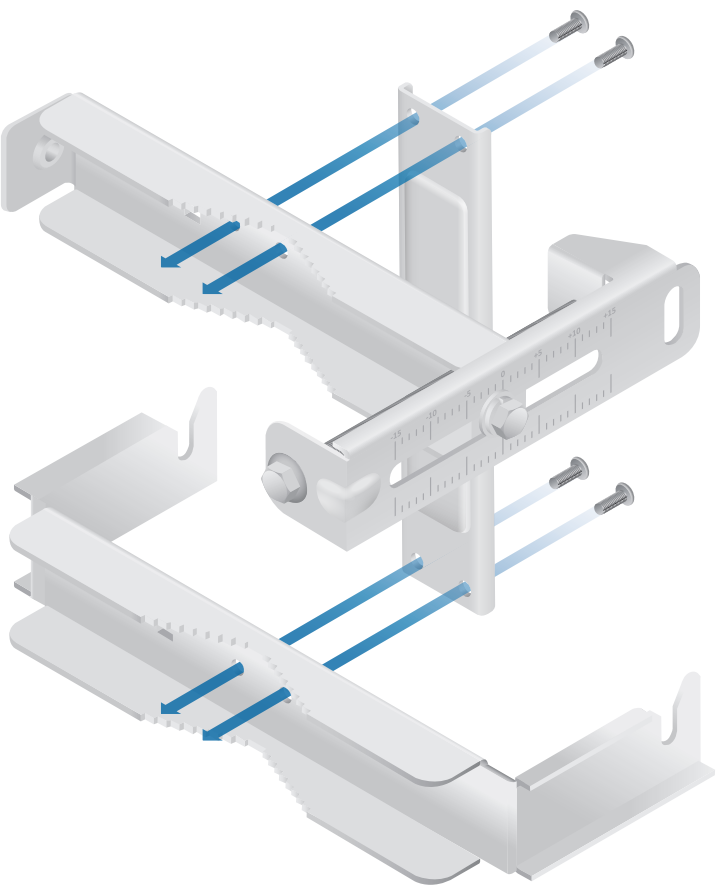

8. Each *M8x150 Carriage Bolt* includes a serrated flange nut. Remove these and use them in the next step.
9. Attach one *Pole Clamp* to each pole bracket.
   a. Insert two *M8x150 Carriage Bolts* into each pole bracket.
   b. Slide the hole of a *Pole Clamp* over one bolt of each pole bracket.
   c. Place one serrated flange nut on each bolt.

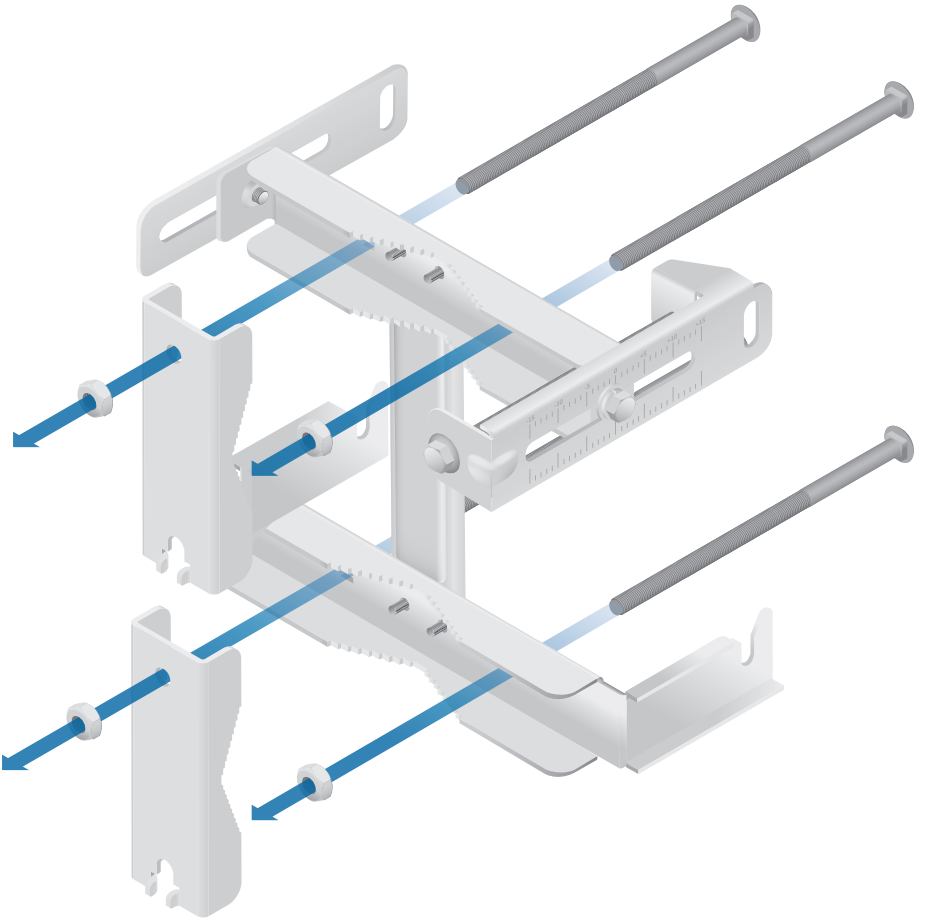

10. Attach the *Stabilizer Brackets* to the pole just beneath the area where the PowerBeam will be attached.

Note: The pole-bracket assembly can accommodate a Ø 38 - 101 mm pole.

a. Place one *Stabilizer Bracket* on each side of the pole.
b. Insert the two *M10x100 Bolts* into the *Stabilizer Brackets*.
c. Secure each bolt with one *Serrated Flange Nut*.

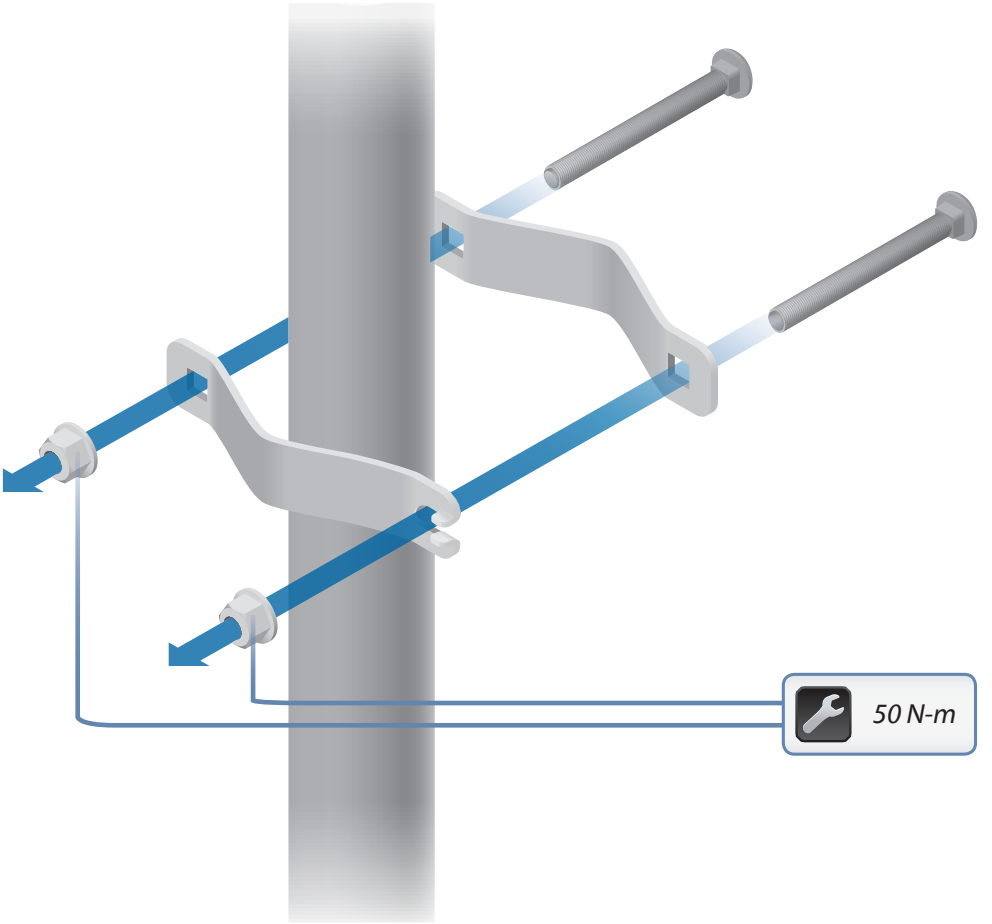

11. Attach the pole-bracket assembly to the pole:
    a. Slide the slot of each *Pole Clamp* over the corresponding *M8x150 Carriage Bolt*.
    b. Tighten the serrated flange nuts of the bolts to secure the pole-bracket assembly to the pole.

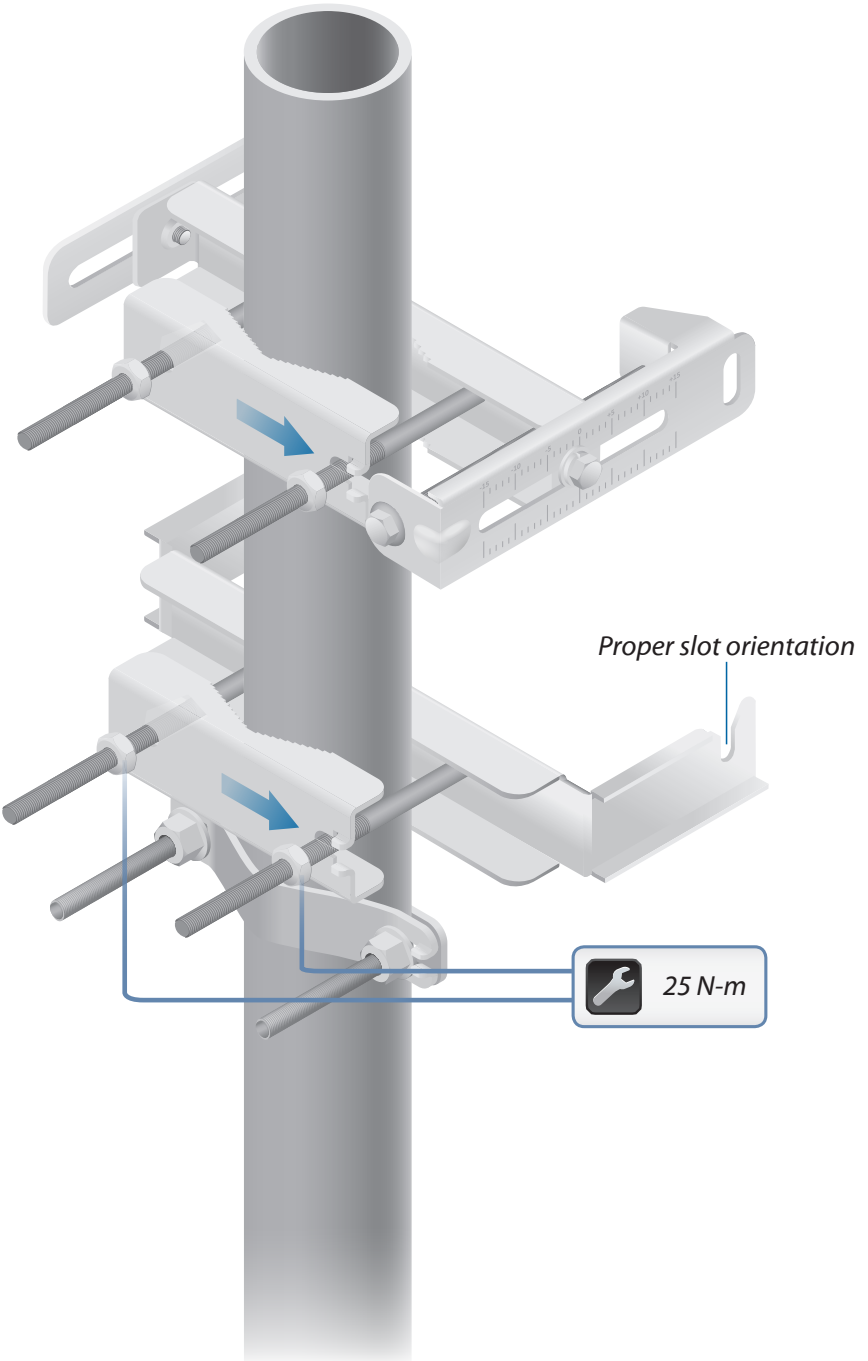

12. Lift the *Dish Reflector* and align the two lower *Hex Head Bolts* with the slots on the *Lower Pole Bracket*. Seat the bolts in the slots.

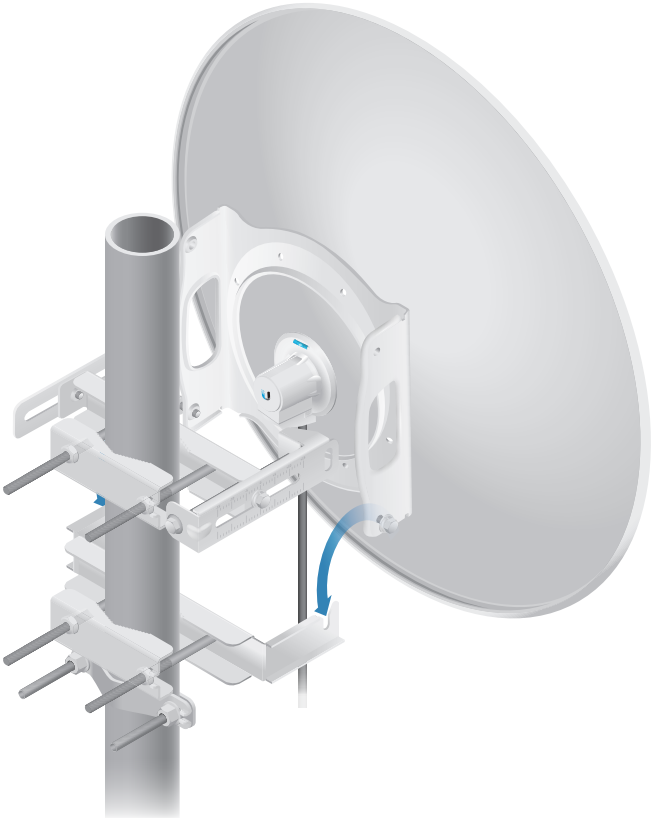

13. Attach each arm of the *Upper Pole Bracket* to the *Mounting Bracket* using a *Hex Head Bolt*, *Lock Washer*, and *Flat Washer*.

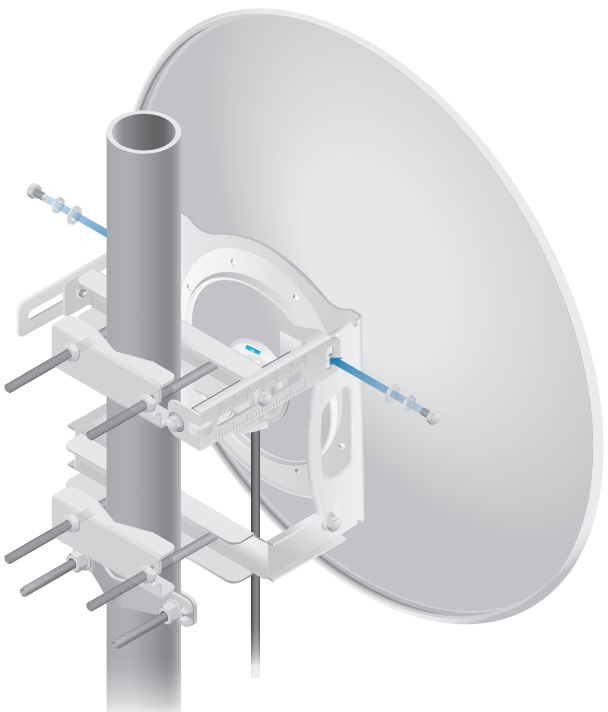

14. Before adjusting the tilt angle, ensure that the six *Hex Head Bolts* are loose enough to allow movement.

IMPORTANT: If you cannot spin the washers freely by hand, then loosen the *Hex Head Bolts* until you can.

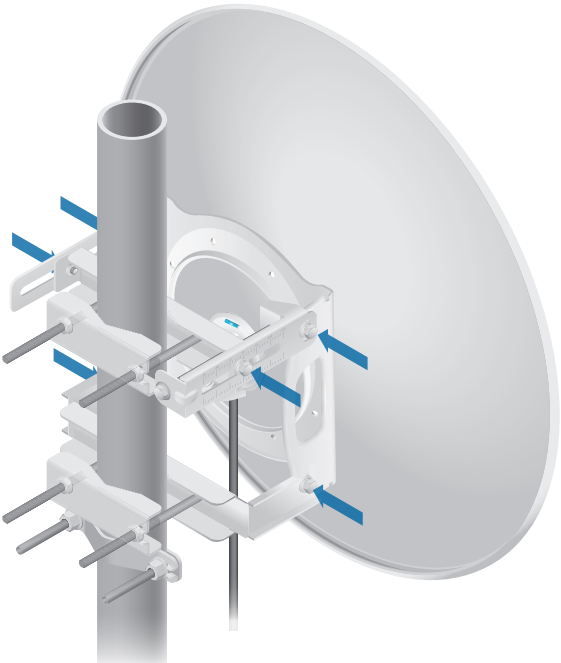

15. To adjust the tilt angle, turn the screw head of the elevation rod until the desired tilt is reached.

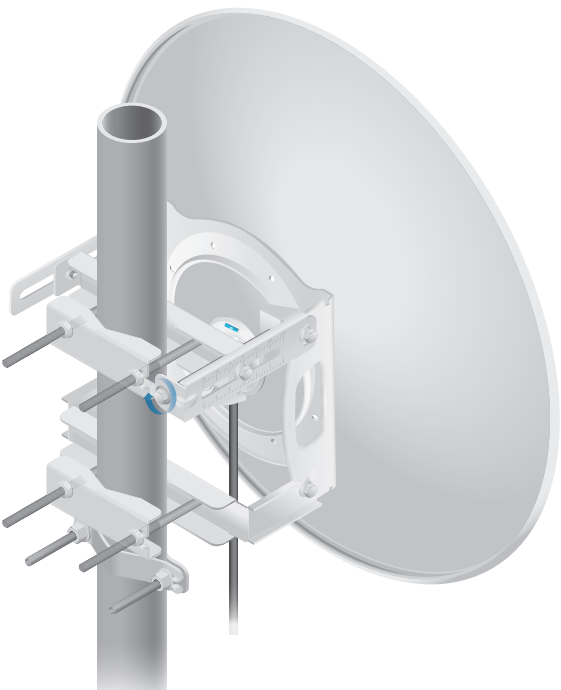

16. Lock the alignment by tightening all six *Flange Bolts* to 25 N-m.

Note: Steps 17-20 are optional instructions for mounting the *Gigabit PoE Adapter* on a wall.

17. Remove the wall-mount bracket from the *Gigabit PoE Adapter* and position it at the desired location on the wall with the arrow pointing up.
18. Use a pencil to mark the two holes on the wall.

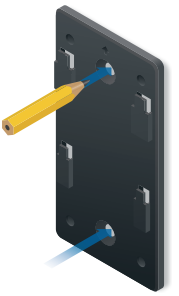

19. Attach the wall-mount bracket to the wall using the appropriate fasteners (not included).

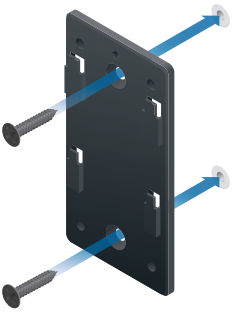

20. Align the tabs of the *Gigabit PoE Adapter* with the slots of the wall-mount bracket and slide the *Gigabit PoE Adapter* down.

640-00136-05