UniFi 6 Enterprise

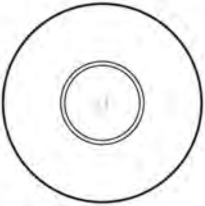
a

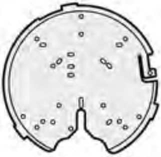
b

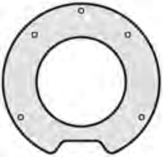
c

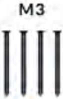

d

e

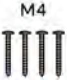

f

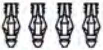
g

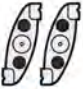
h

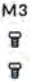

i

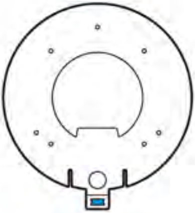

ⓙ ⓚ ⓛ ⓜ

1

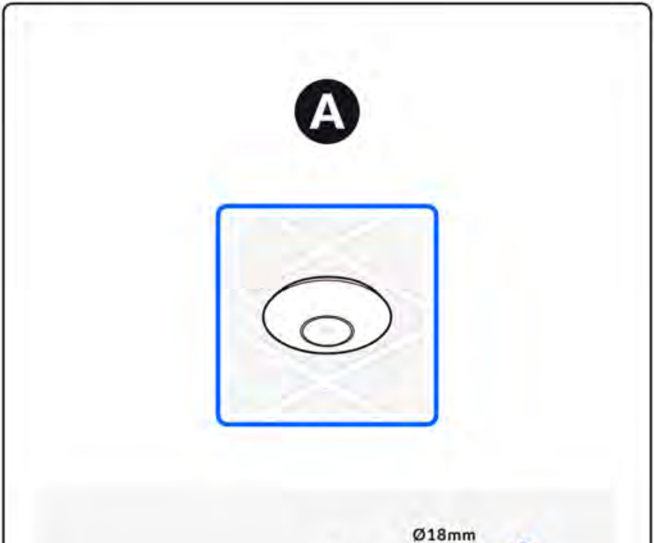

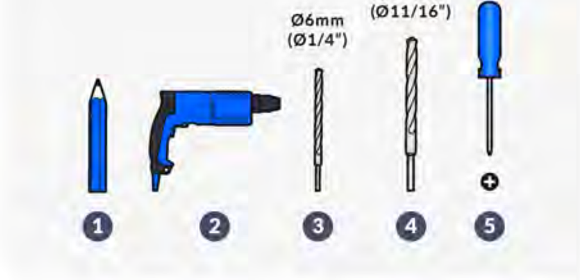
(Ø11/16")
Ø6mm
(Ø1/4")
1
2
3
4
5

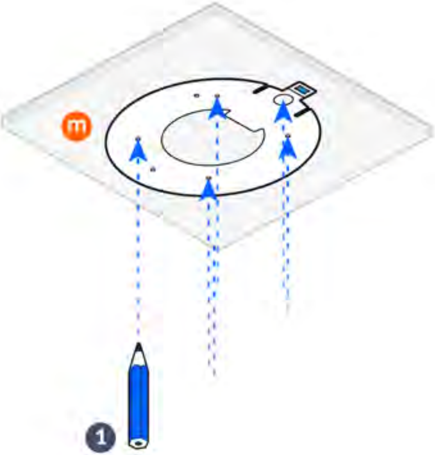

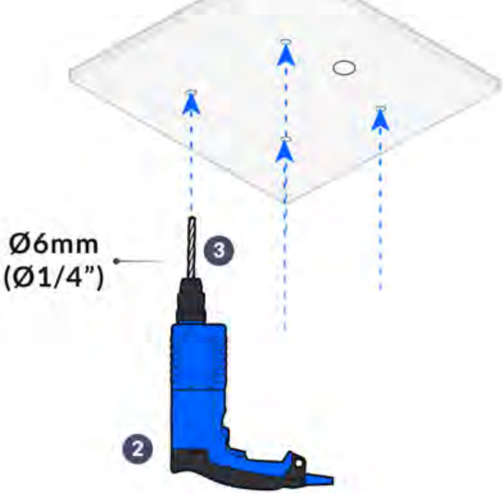

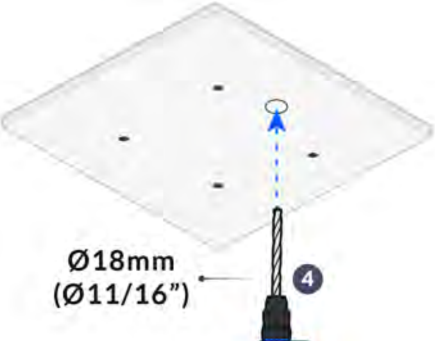
Ø18mm
(Ø11/16")
4

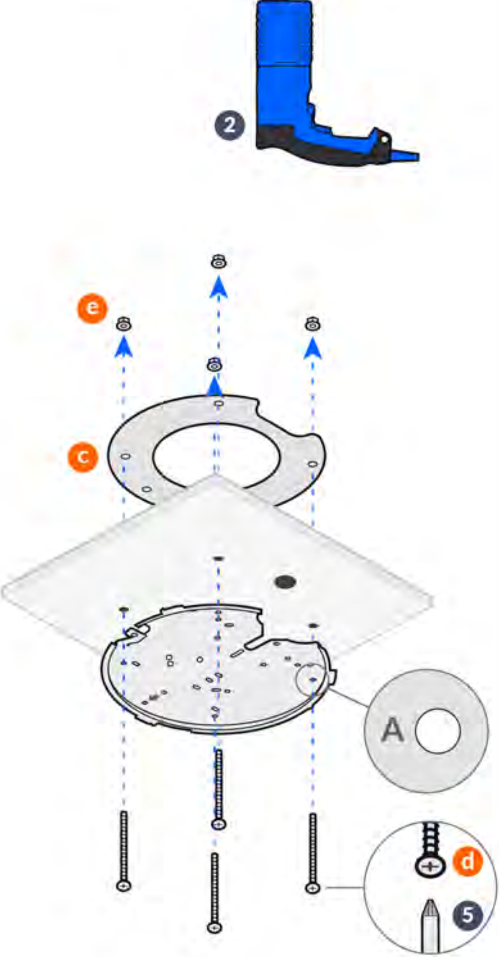

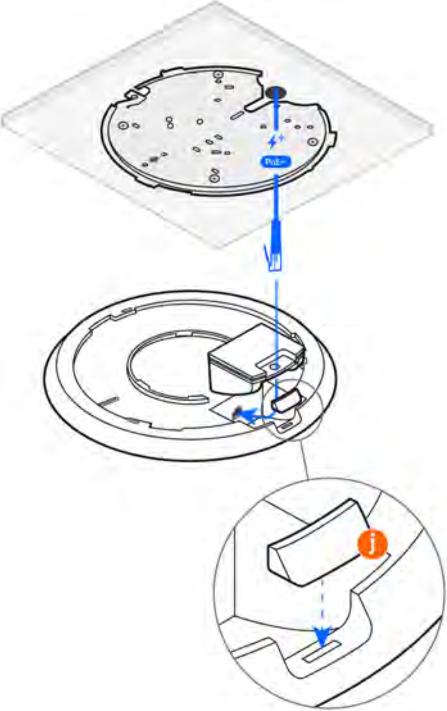

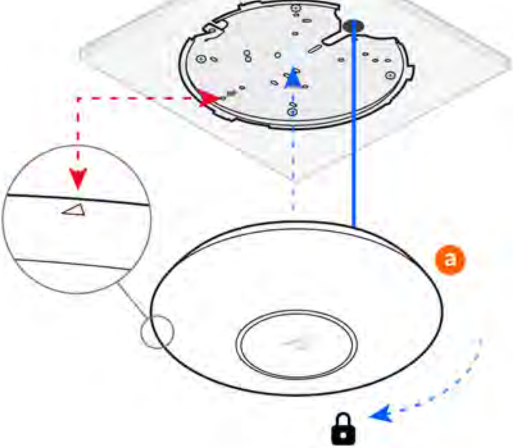

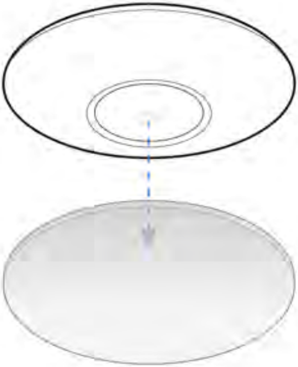

B

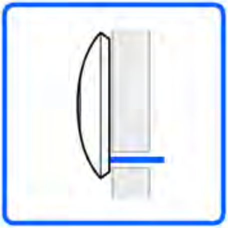

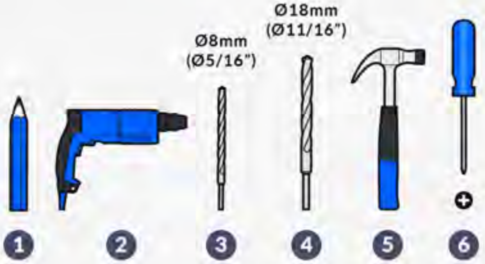
Ø8mm
(Ø5/16")
Ø18mm
(Ø11/16")
+
1
2
3
4
5
6

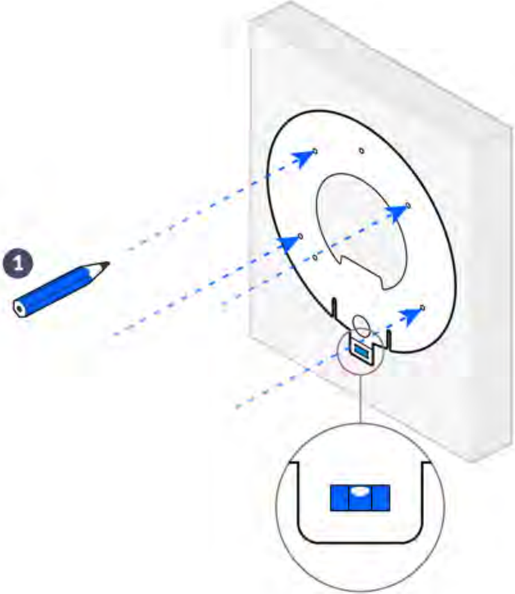

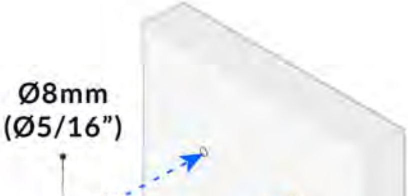

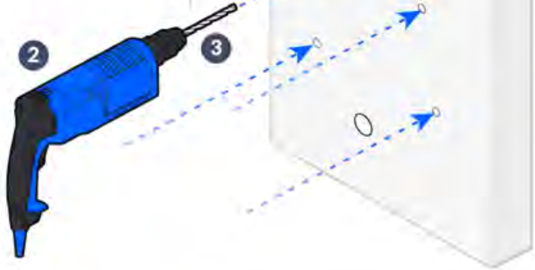

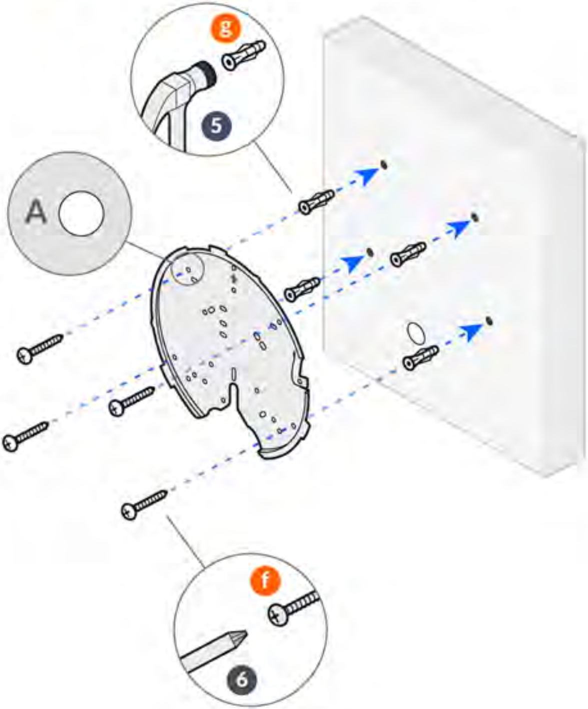

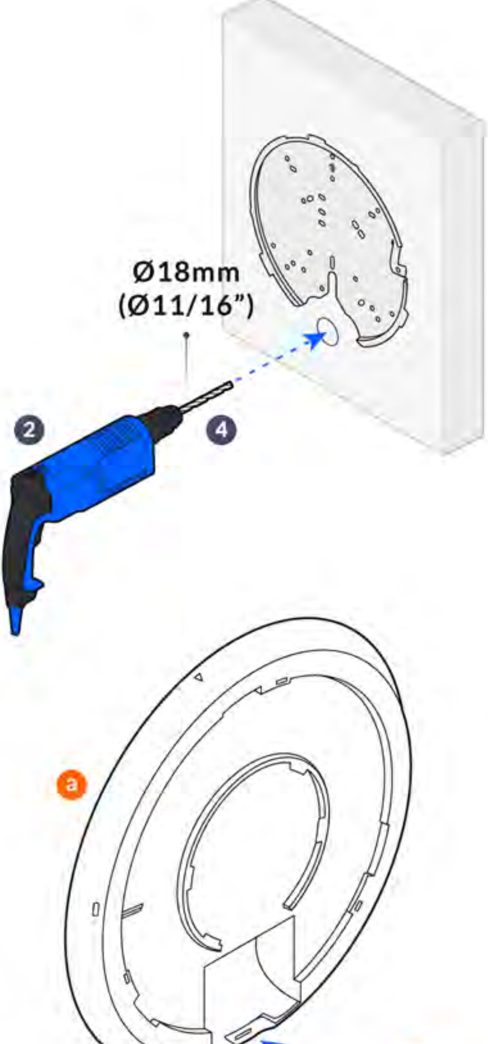
Ø18mm
(Ø11/16")
2
4
a

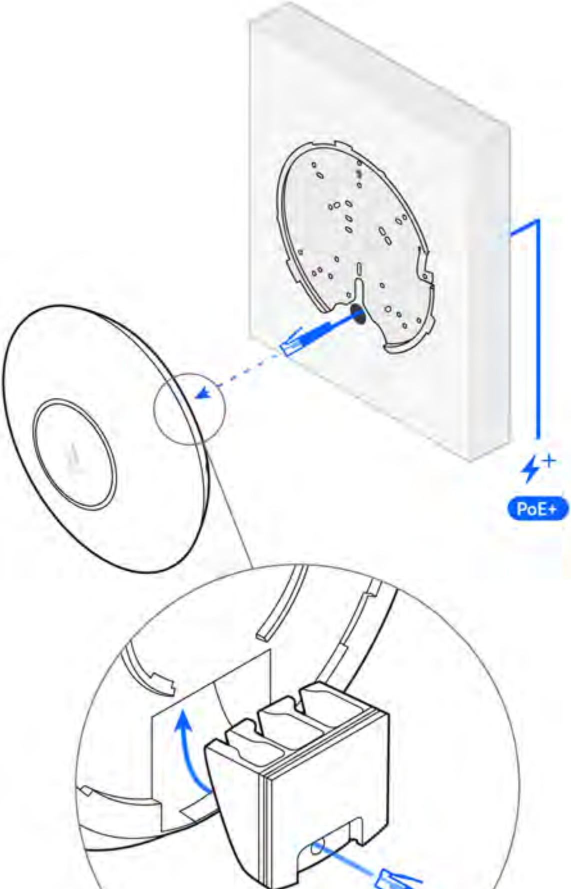

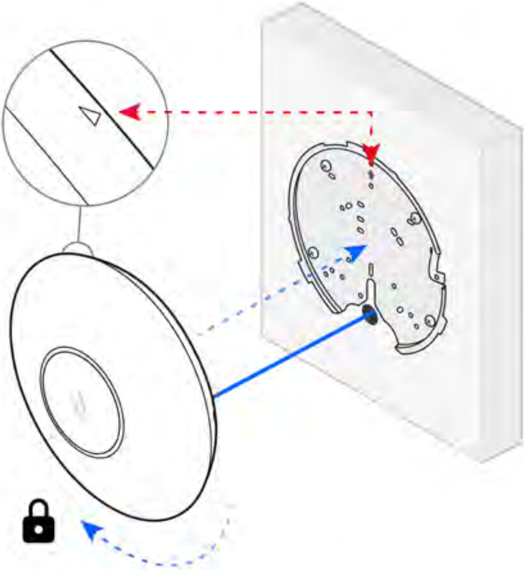

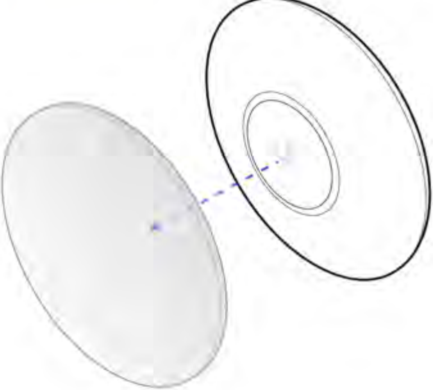

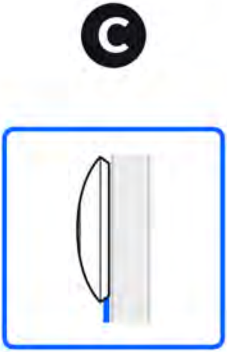

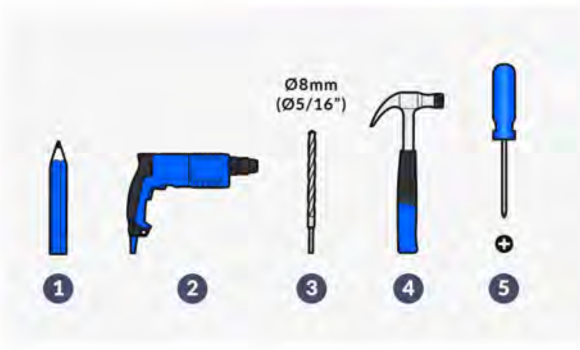
Ø8mm
(Ø5/16")
1
2
3
4
5

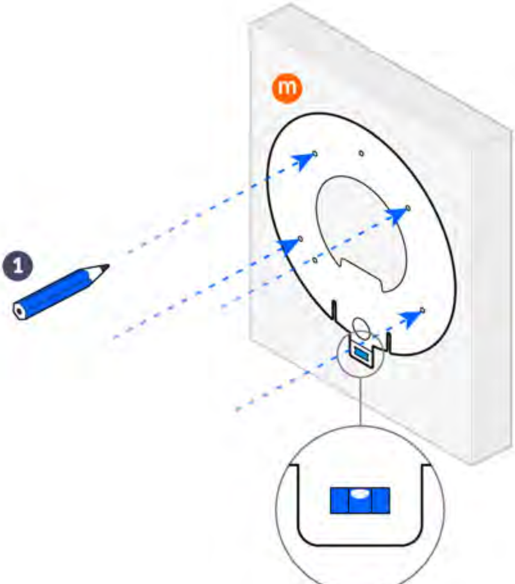

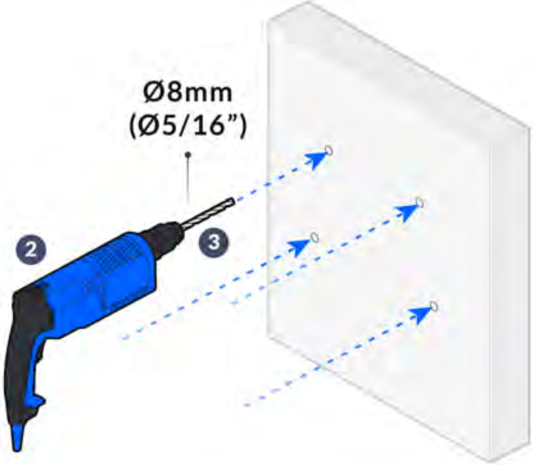
Ø8mm
(Ø5/16")
2
3

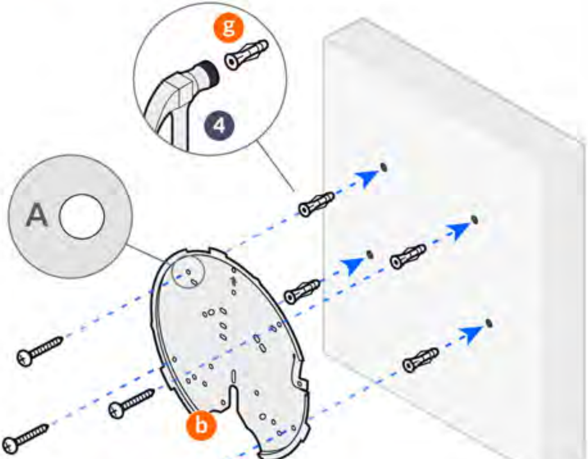

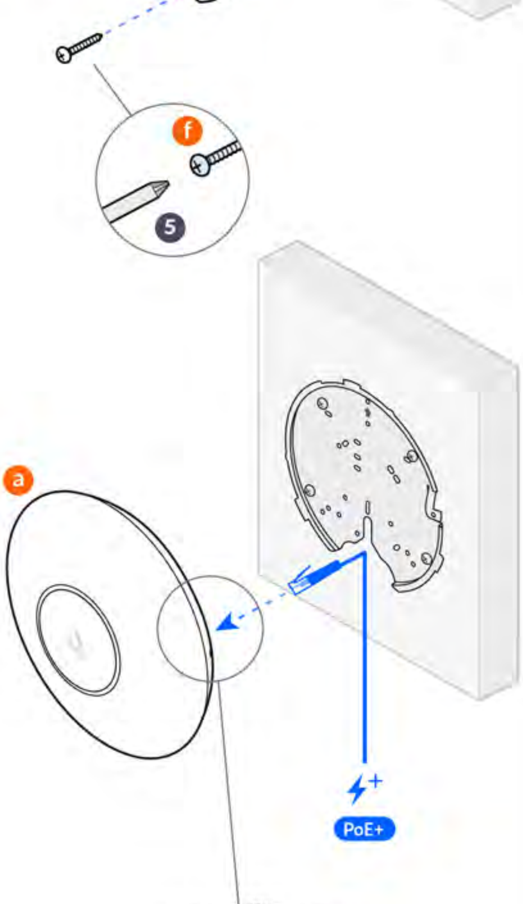

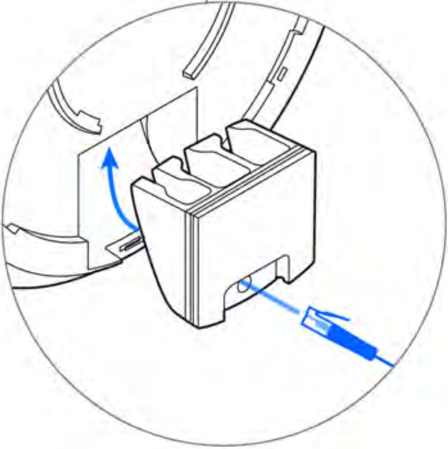

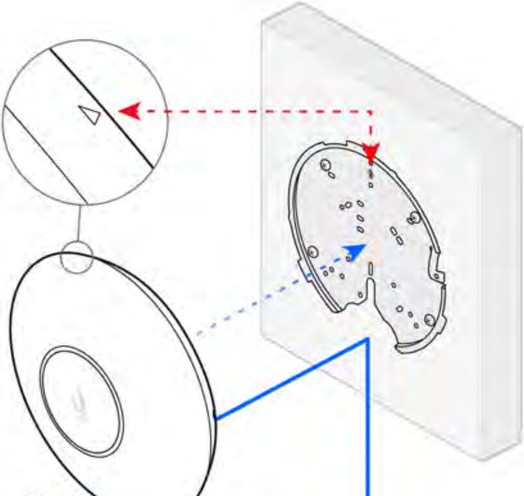

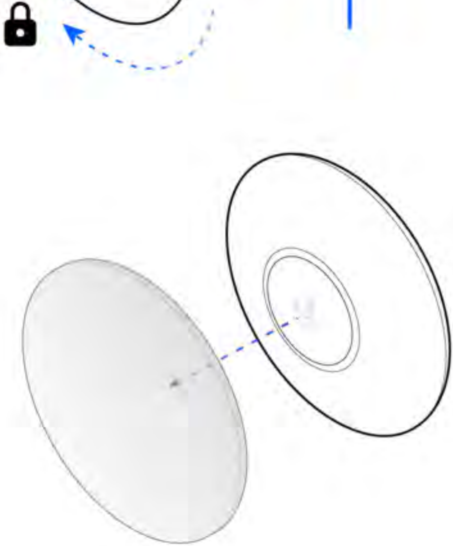

D

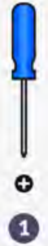

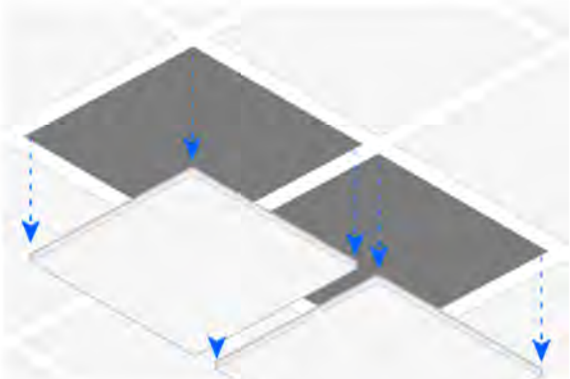

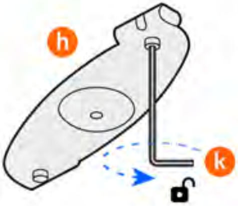

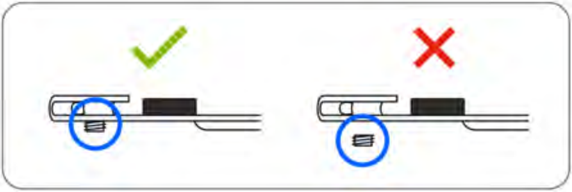

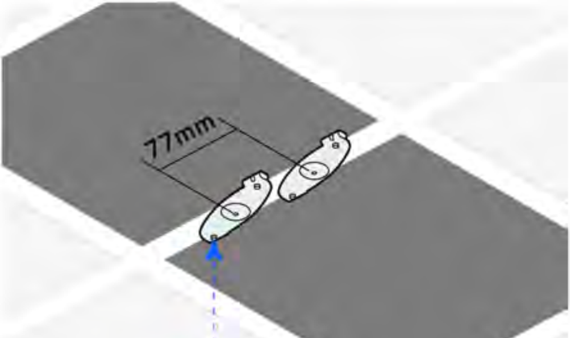

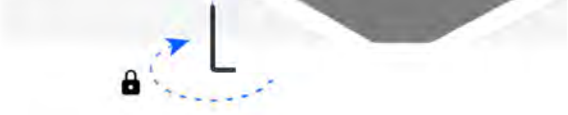

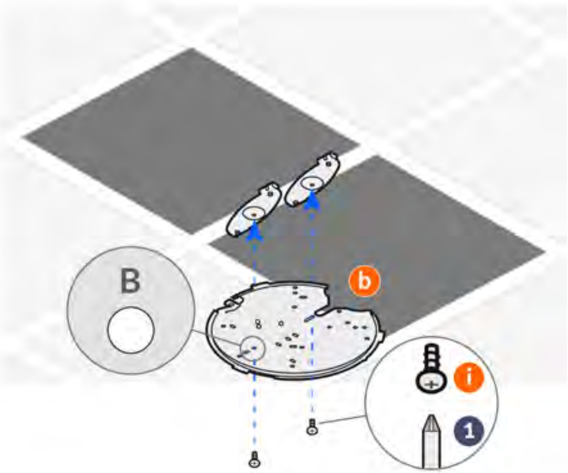

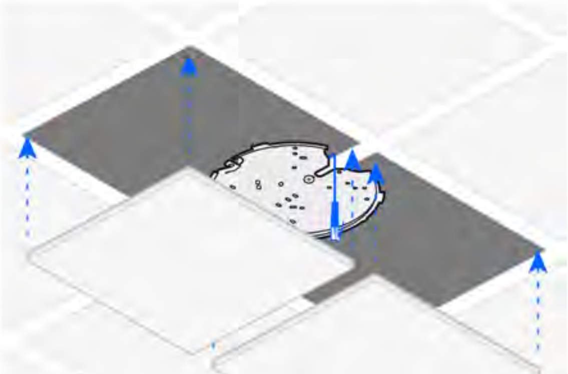

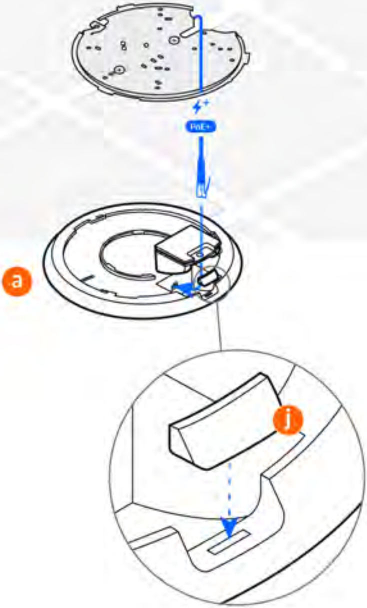

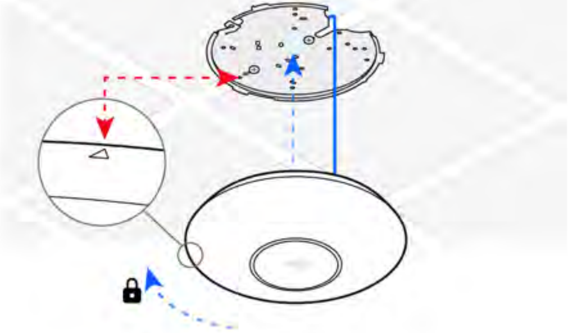

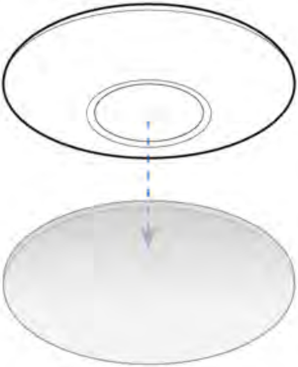

E

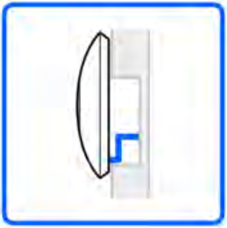

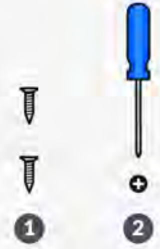

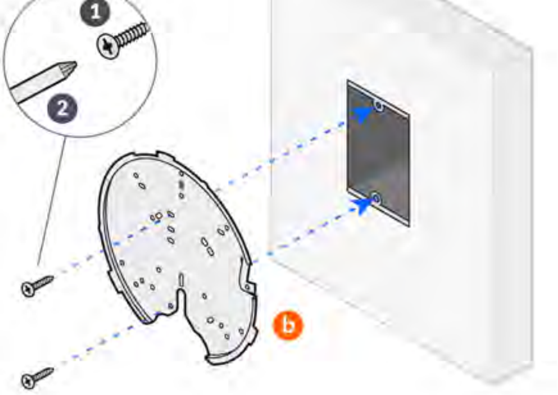

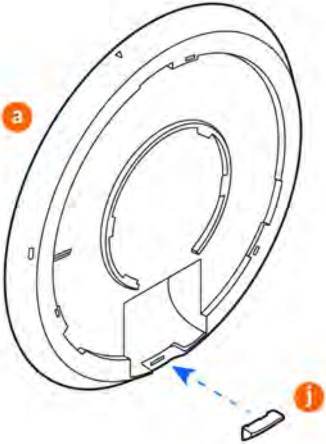

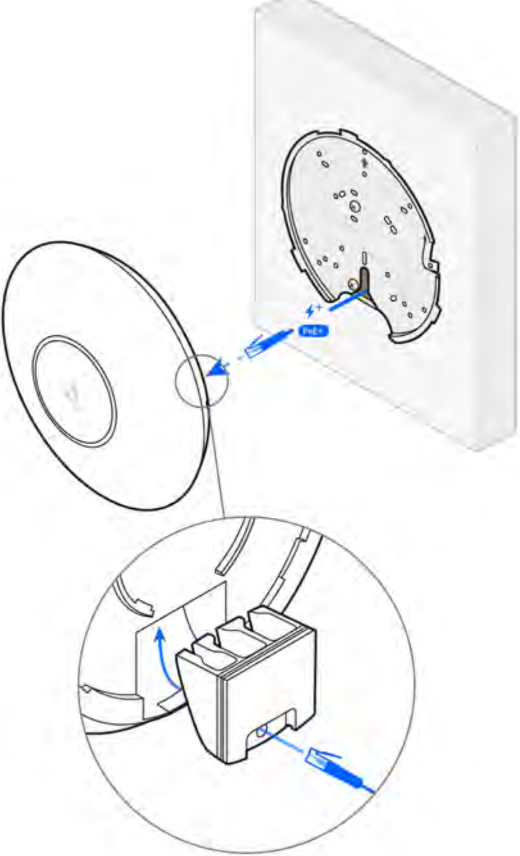

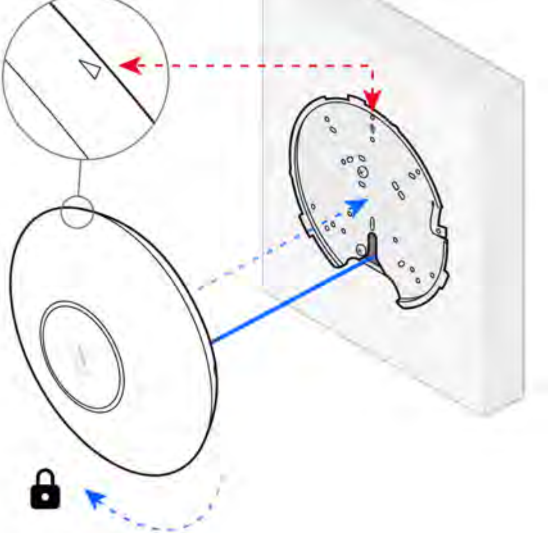

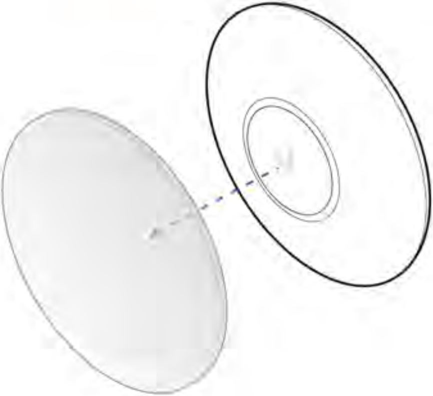

2

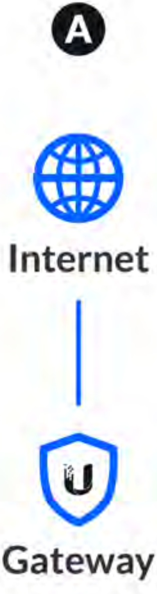
Ⓐ
Internet
Gateway

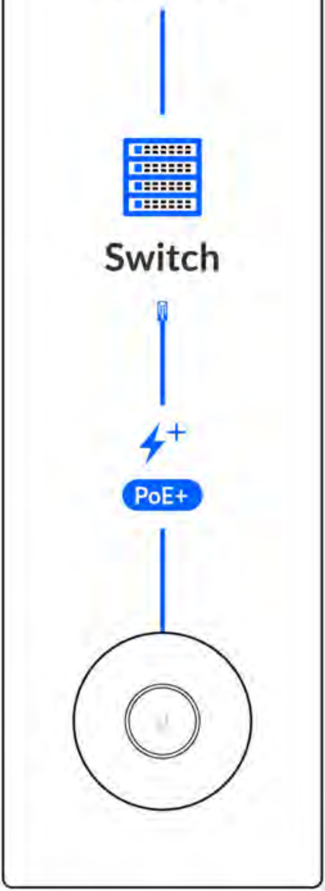

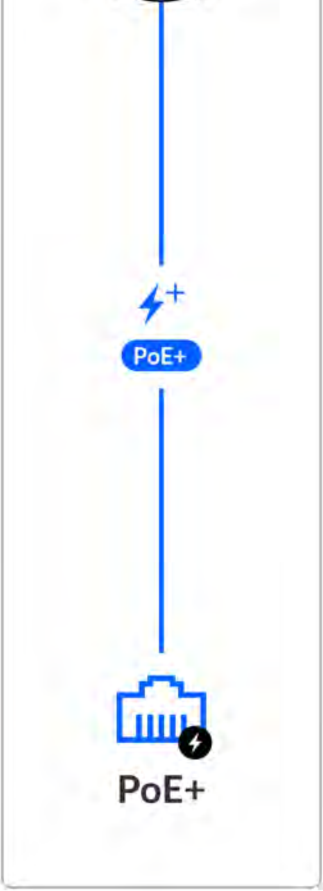

3

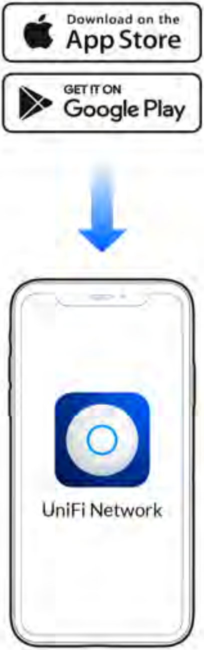
Download on the App Store
GET IT ON Google Play
UniFi Network

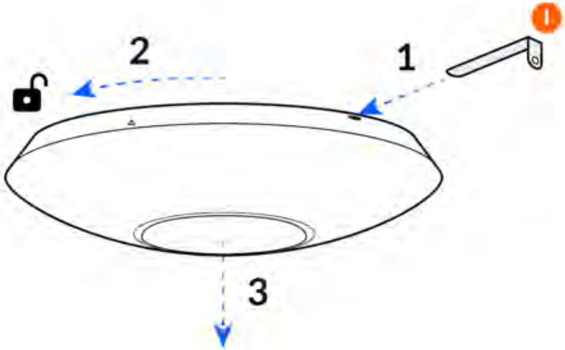

UniFi Network

🔗

Get Answers
help.ui.com

UI Support

🔗