U7 Pro

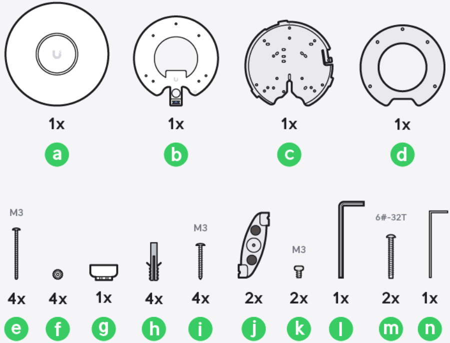
1x
a
1x
b
1x
c
1x
d
M3
4x
e
4x
f
1x
g
4x
h
M3
4x
i
2x
j
M3
2x
k
1x
l
6#-32T
2x
m
1x
n

A

B

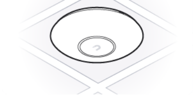

🔗

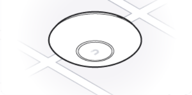

🔗

C

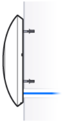

🔗

D

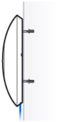

🔗

E

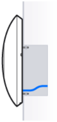

🔗

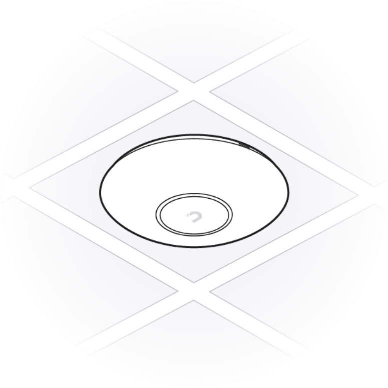

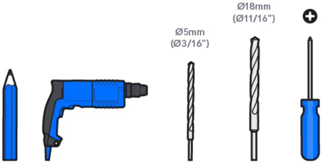
Ø5mm
(Ø3/16")
Ø18mm
(Ø11/16")

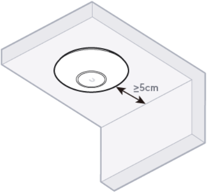

1

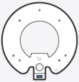

1x

b

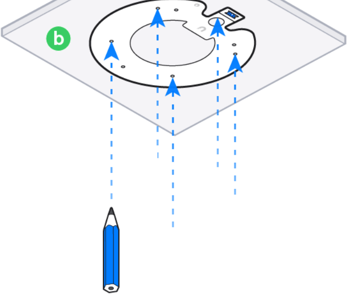

2

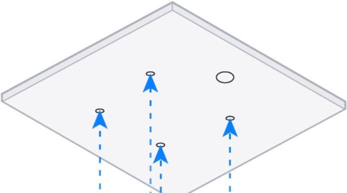

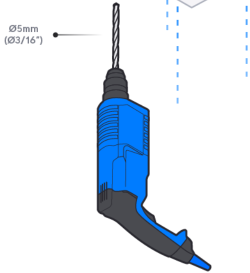

3

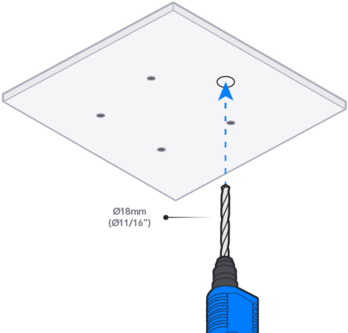
Ø18mm
(Ø11/16")

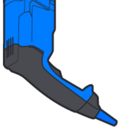

4

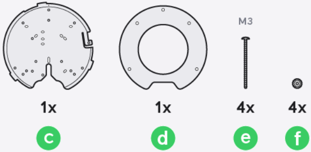
1x
c
1x
d
M3
4x
e
4x
f

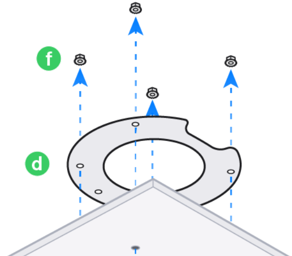

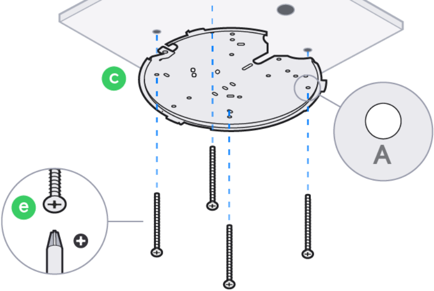

5

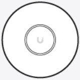

1x

a

1x

g

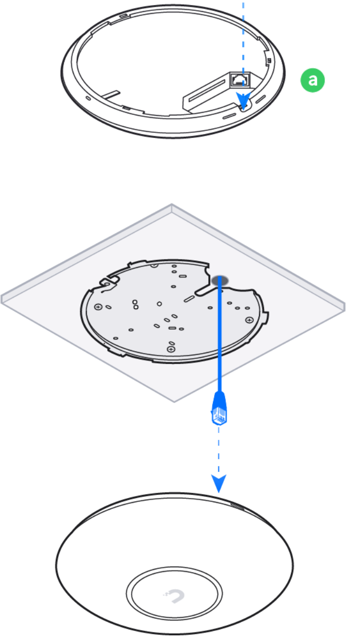

6

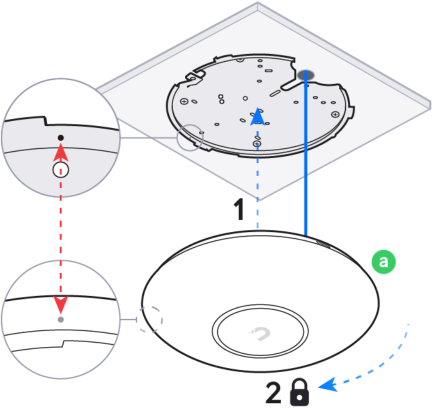

7

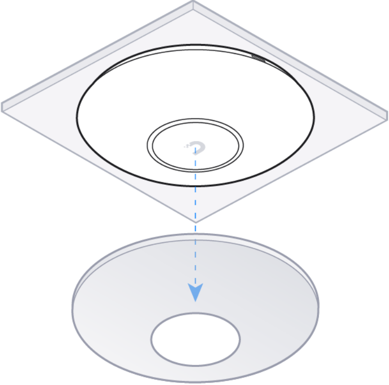

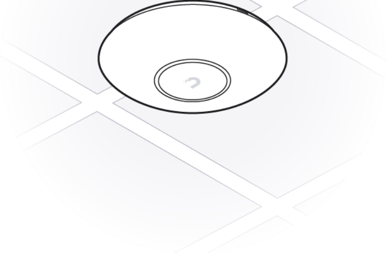

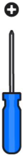

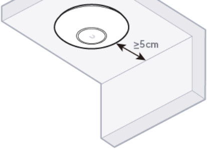

1

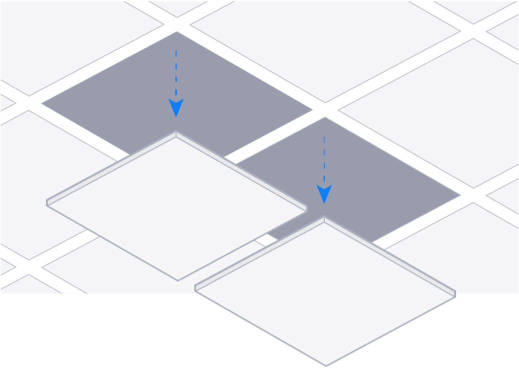

2

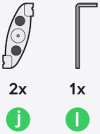

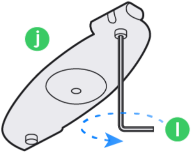

✓

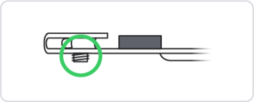

✗

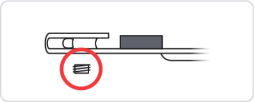

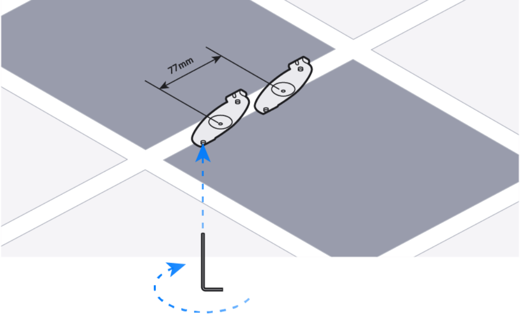

3

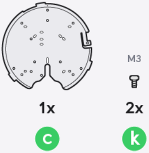

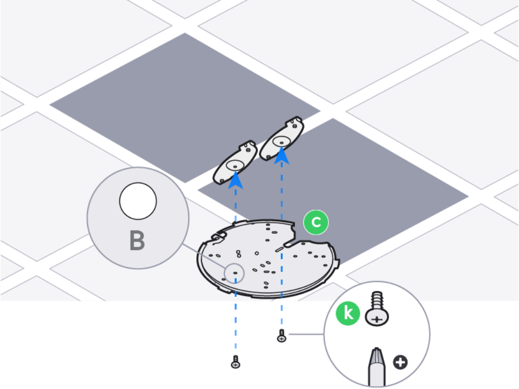

4

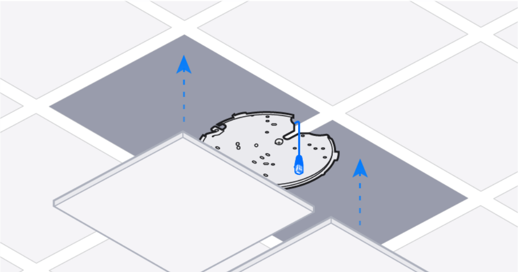

5

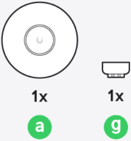

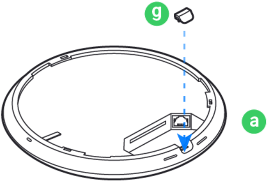

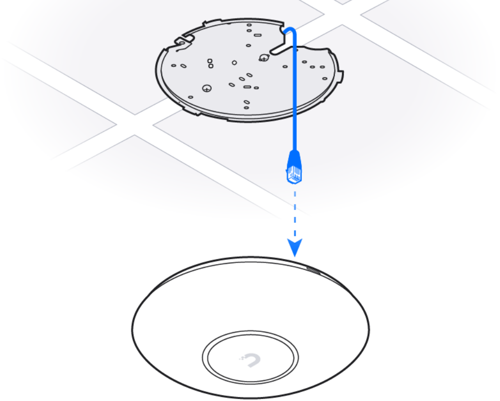

6

1x

a

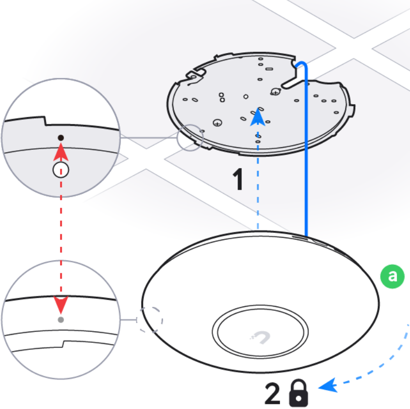

7

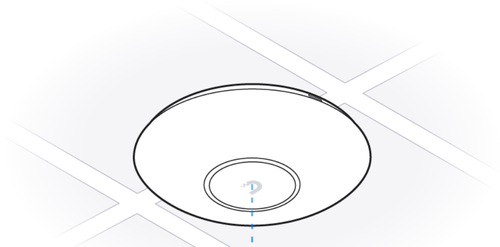

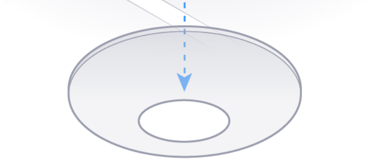

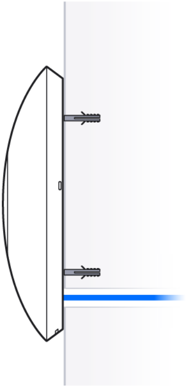

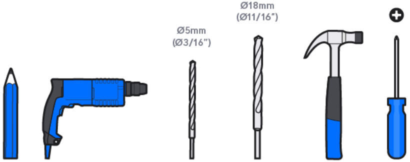
Ø5mm
(Ø3/16")
Ø18mm
(Ø11/16")
+

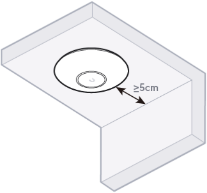

1

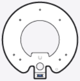

1x

b

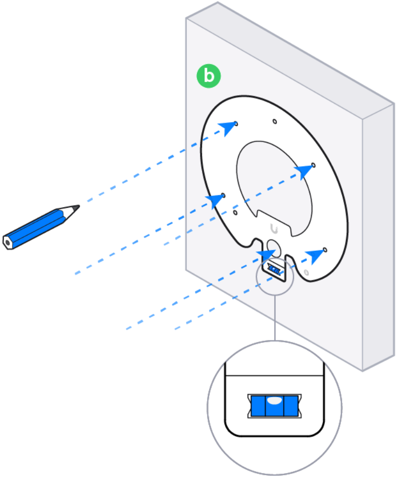

2

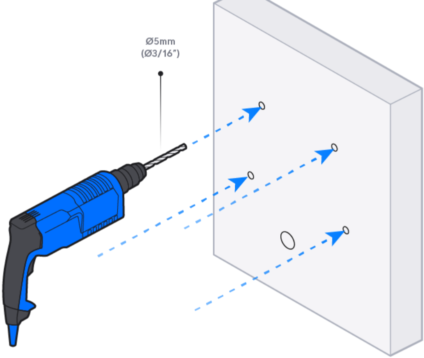

3

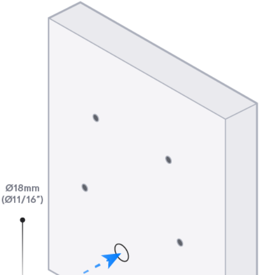
Ø18mm
(Ø11/16")

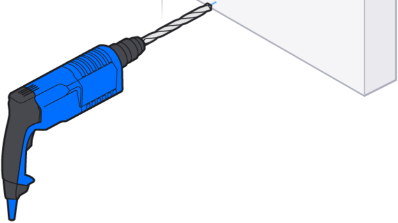

4

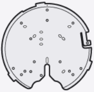

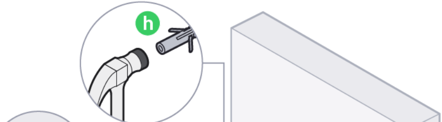

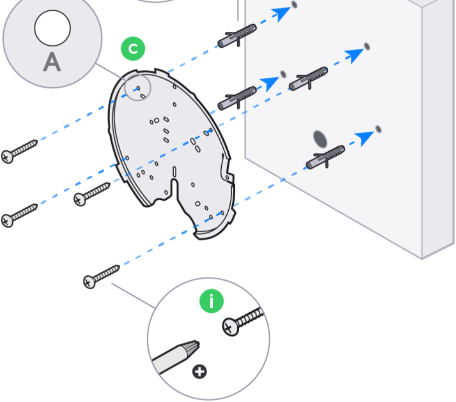

5

a

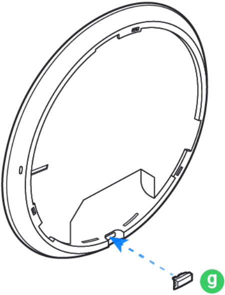

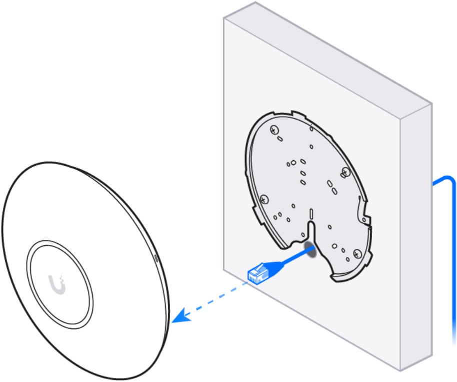

6

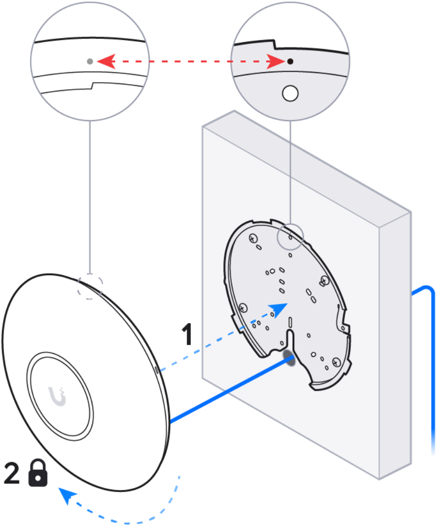

7

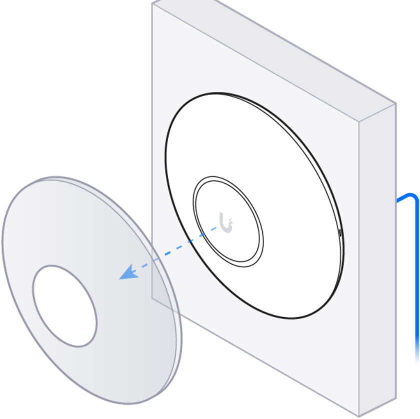

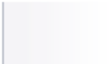

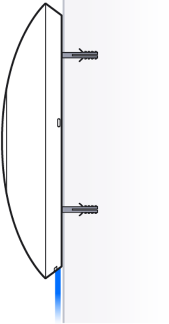

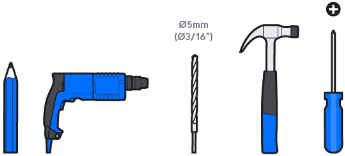

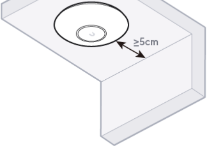

1

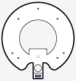

1x

b

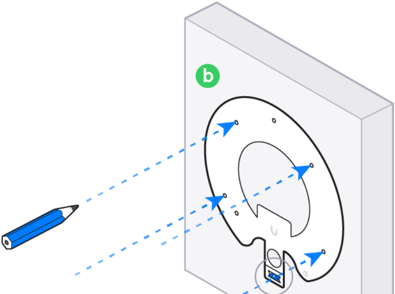

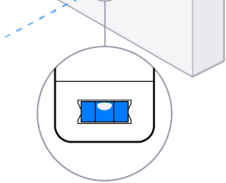

2

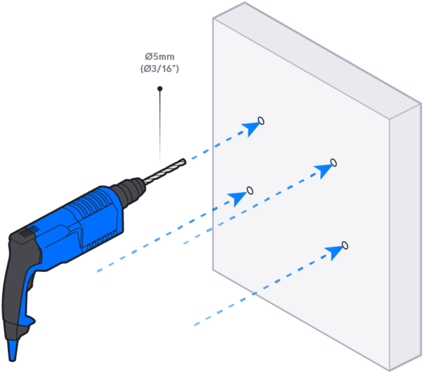

3

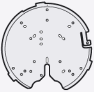

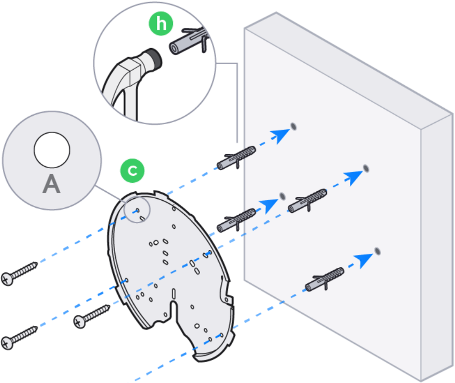

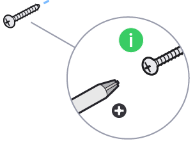

4

1x

a

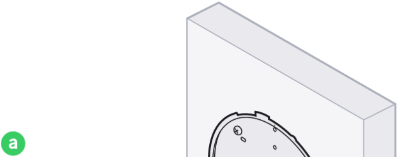

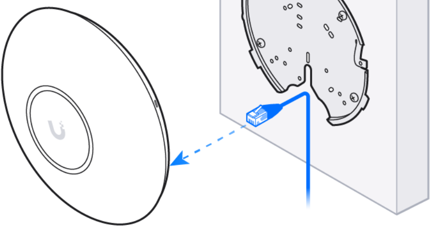

5

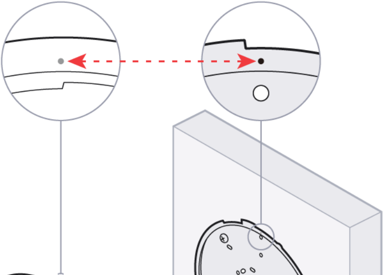

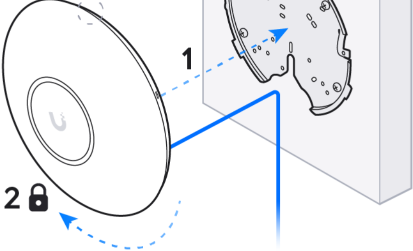

6

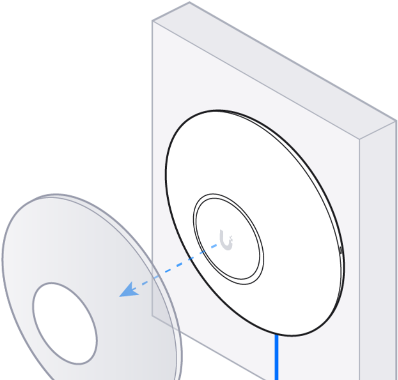

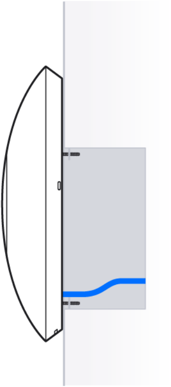

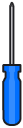

1

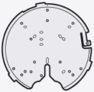

1x

c

2x

m

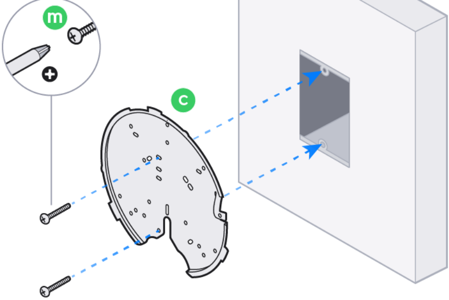

2

1x

a

1x

g

a

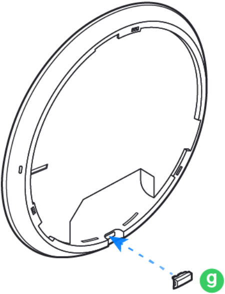

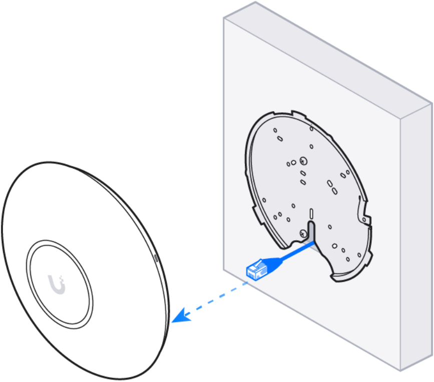

3

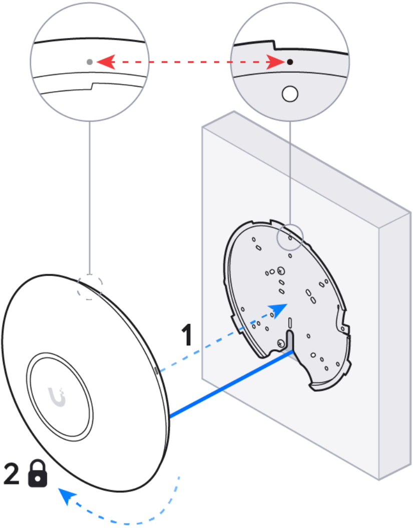

4

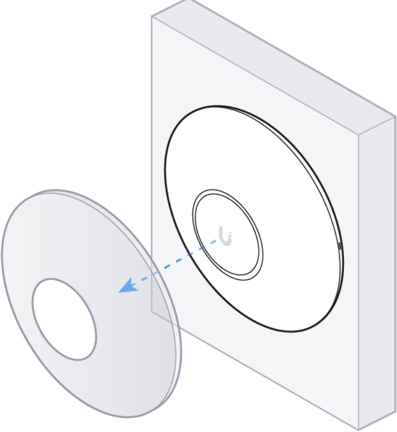

5

A

🌐

B

🌐

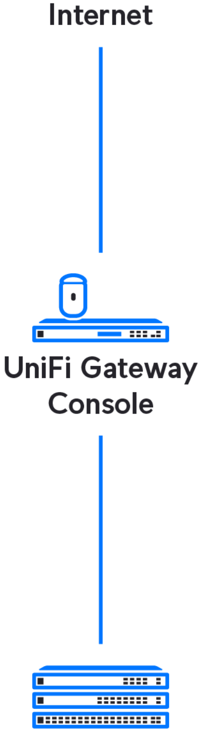
Internet
UniFi Gateway Console

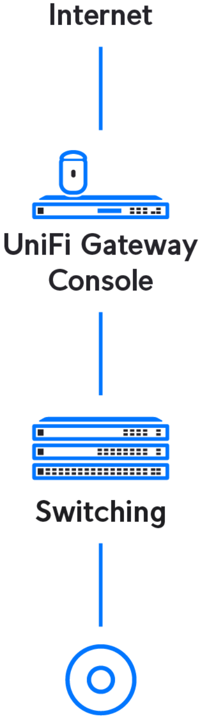
Internet
UniFi Gateway Console
Switching

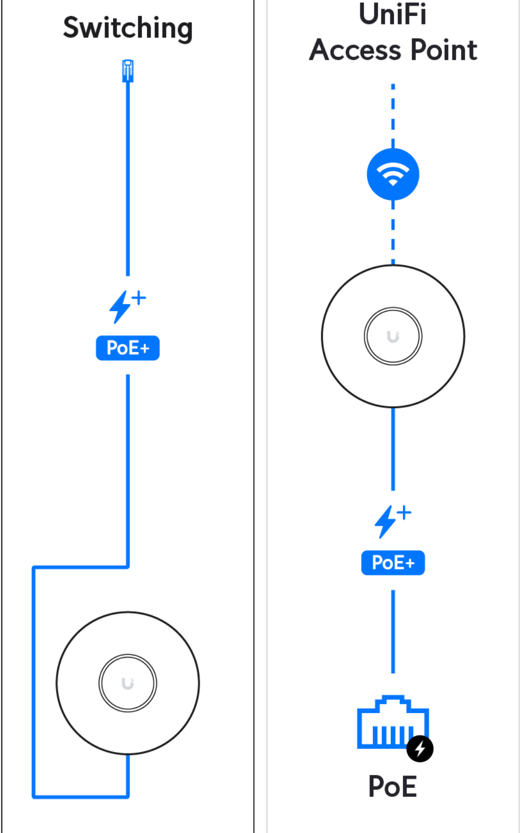
Switching
PoE+
UniFi
Access Point
PoE+
PoE

6

Download on the App Store | GET IT ON Google Play

🔗 | 🔗

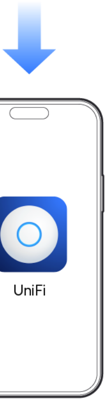

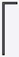

1x

n

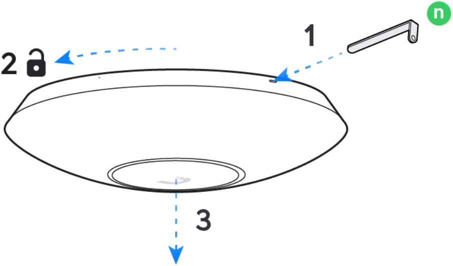

If you need further assistance, visit our Help Center or contact Ubiquiti Support.

©2023 Ubiquiti Inc. All rights reserved. Ubiquiti, the Ubiquiti U logo, and UniFi are trademarks or registered trademarks of Ubiquiti Inc. in the United States and in other countries. Apple and the Apple logo are trademarks of Apple Inc., registered in the U.S. and other countries. App Store is a service mark of Apple Inc., registered in the U.S. and other countries. Android, Google, Google Play, and the Google Play logo are trademarks of Google LLC.