DATASHEET

UniFi® | Antenna

Directional Dual-Band Antenna for UAP-AC-M

Model: UMA-D

Dual-Band, Dual-Polarity Optimized for 802.11ac

High Efficiency Directional Radiation Pattern

Three-Axis Ball Joint Mount for Precise Aiming

UBIQUITI® NETWORKS

Hardware Overview

The UniFi Antenna, model UMA-D, is an optional mesh antenna designed to work with the UniFi® AC Mesh AP, model UAP-AC-M. With dual-band support, the UMA-D expands range coverage and provides customized pattern shaping. It is available in single- and five-packs.

Antenna Features Optimized for 802.11ac, the UMA-D offers a high efficiency directional radiation pattern with dual polarity.

Weather-Resistant Enclosure Encased in UV-stabilized plastic, the UMA-D can be used indoors or outdoors.

Versatile Mounting The UMA-D has a ball joint mount designed for precise aiming and can be mounted on a pole or wall.

Compatibility The UMA-D is a connectorized antenna that is compatible with the UAP-AC-M.

Pole-Mount Installation

Mounting Kit

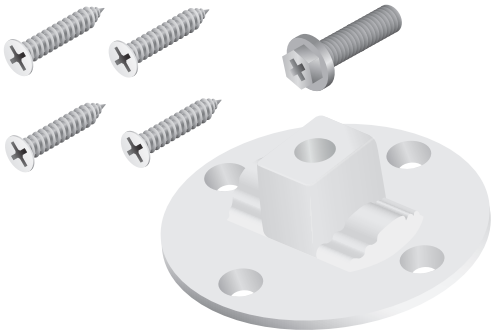

Wall-Mount Kit

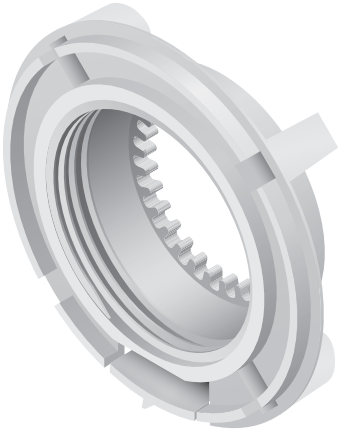

Lock Ring

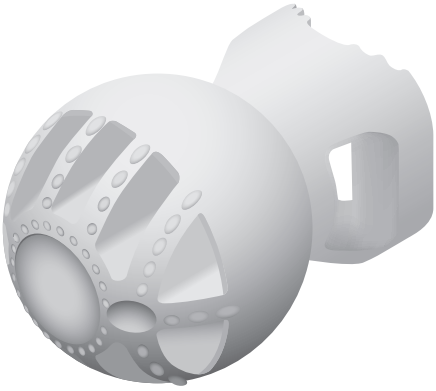

Ball Joint Mount

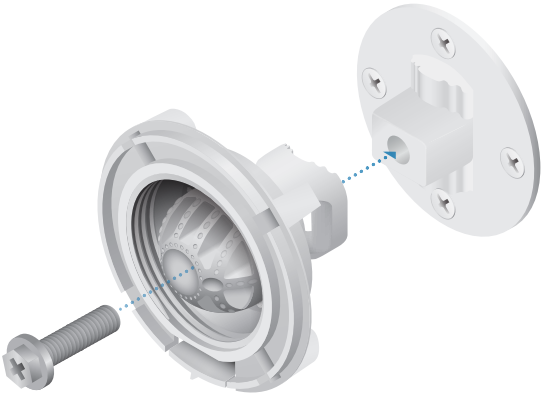

Mount Assembly

Specifications

UMA-D	
Dimensions	201.3 x 128.0 x 32.5 mm (7.93 x 5.04 x 1.28")
Weight (with Mount) (without Mount)	 480 g (16.93 oz) 400 g (14.11 oz)
Enclosure	Outdoor UV Stabilized Plastic
RF Connections	(2) RP-SMA
Supported Frequency Range	2.4 - 2.5 GHz, 5.1 - 5.9 GHz
HPOL Beamwidth 2.4 GHz 5 GHz	 90° 45°
VPOL Beamwidth 2.4 GHz 5 GHz	 90° 45°
Elevation Beamwidth 2.4 GHz 5 GHz	 90° 45°
Maximum VSWR	2:1
Polarization	Dual-Linear
Cross-Pol Isolation 2.4 GHz 5 GHz	 25 dB 30 dB
Antenna Gain 2.4 GHz 5 GHz	 10 dBi 15 dBi
Mounting	Wall/Pole (Kits Included)

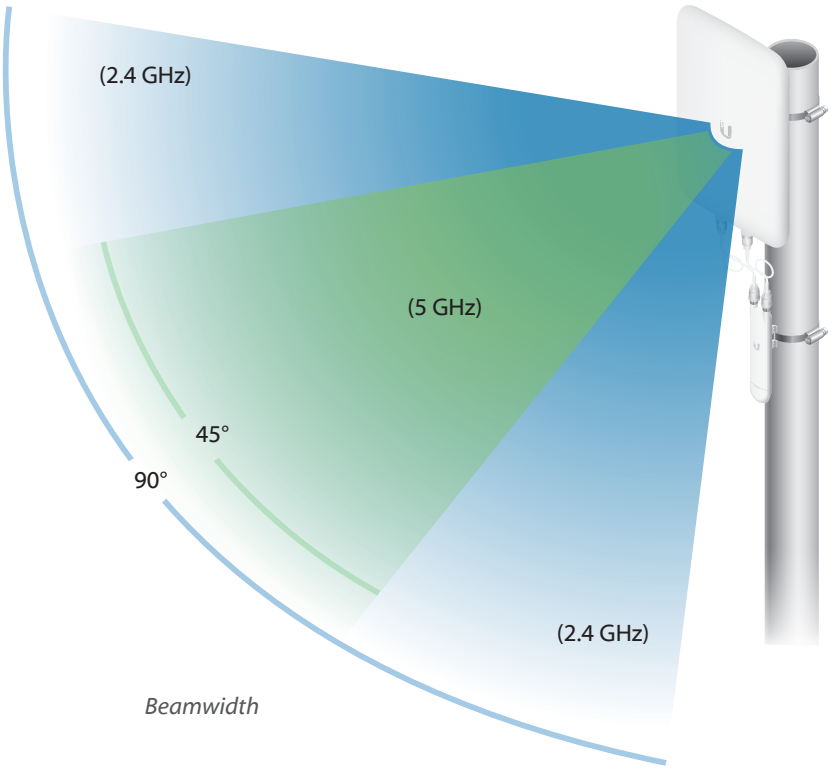

Azimuth (2.4 GHz)

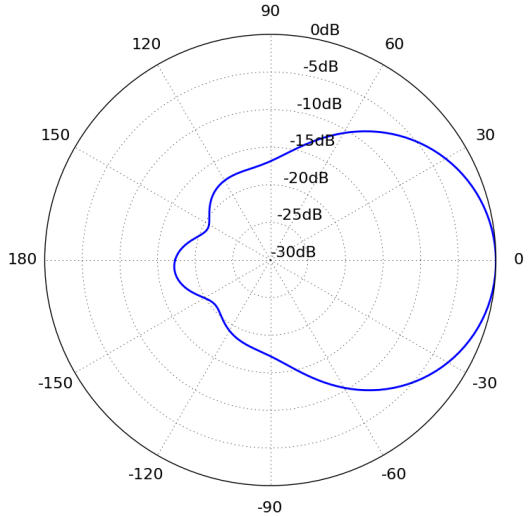

Elevation (2.4 GHz)

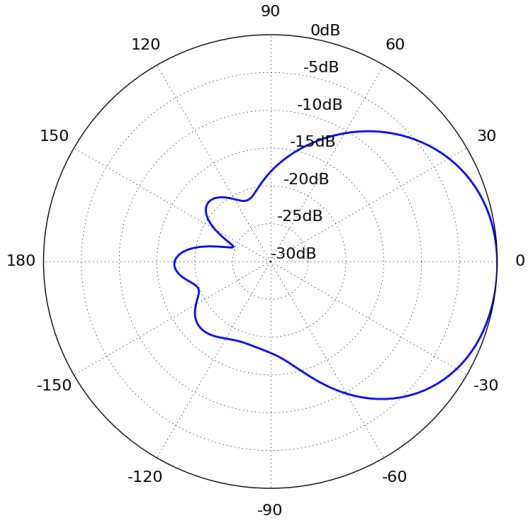

Azimuth (5 GHz)

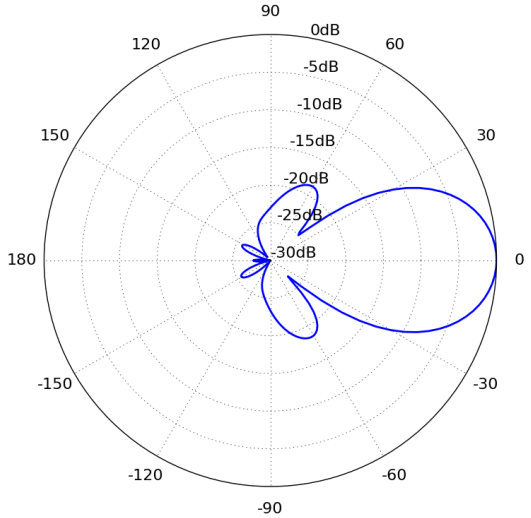

Elevation (5 GHz)

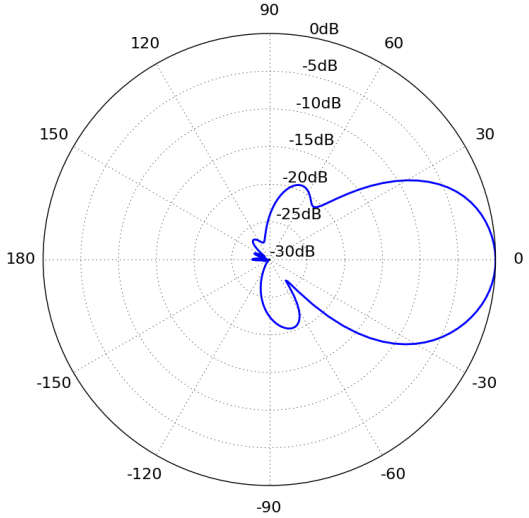

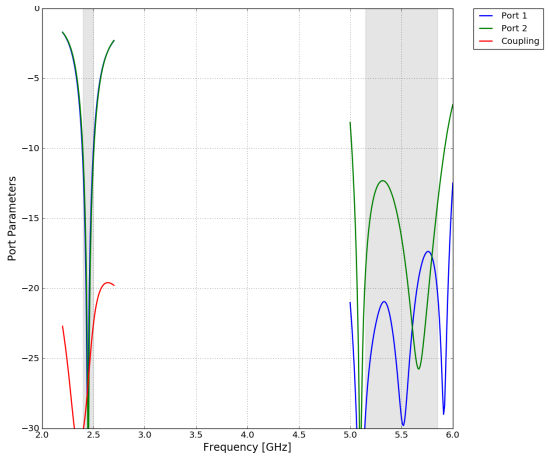

Specifications are subject to change. Ubiquiti products are sold with a limited warranty described at: www.ubnt.com/support/warranty
©2017 Ubiquiti Networks, Inc. All rights reserved. Ubiquiti, Ubiquiti Networks, the Ubiquiti U logo, the Ubiquiti beam logo, and UniFi are trademarks or registered trademarks of Ubiquiti Networks, Inc. in the United States and in other countries. All other trademarks are the property of their respective owners.