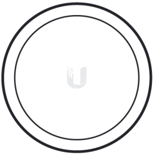

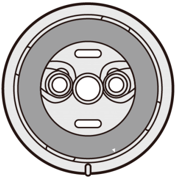

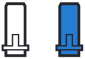

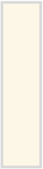

1

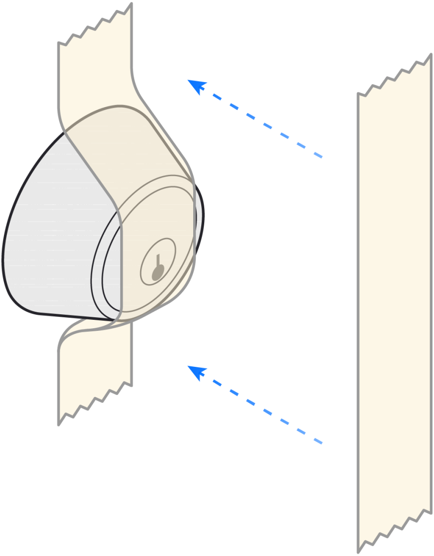

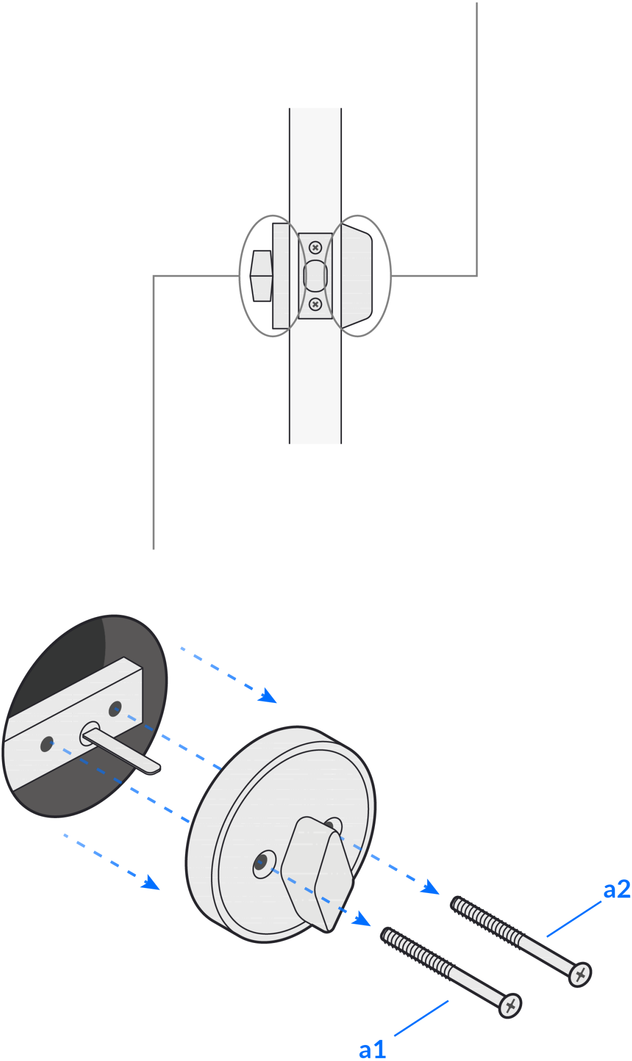

2

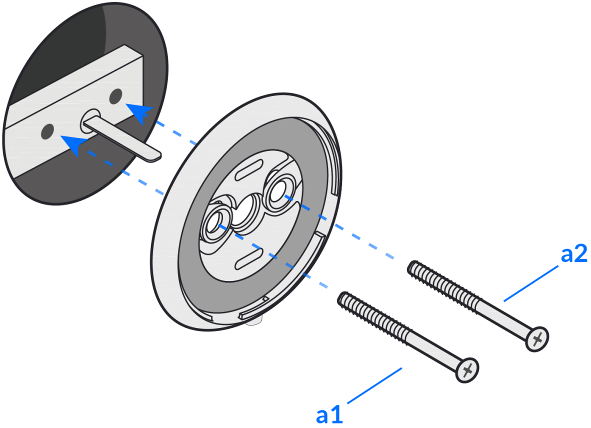

3

A

B

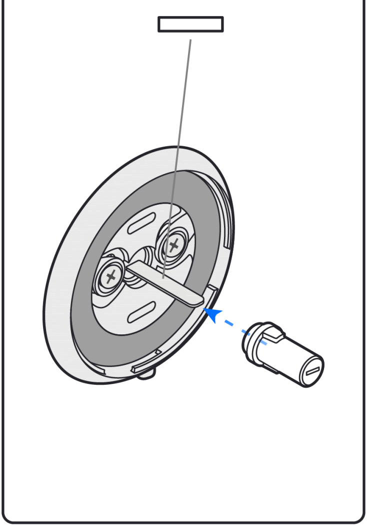

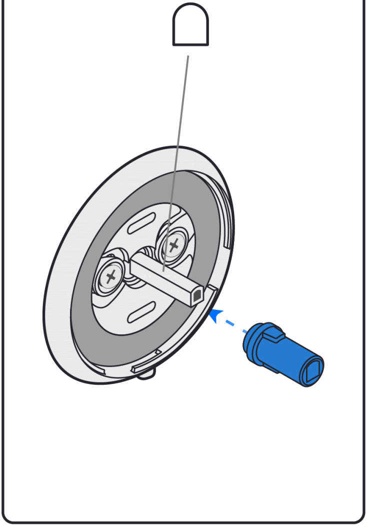

4

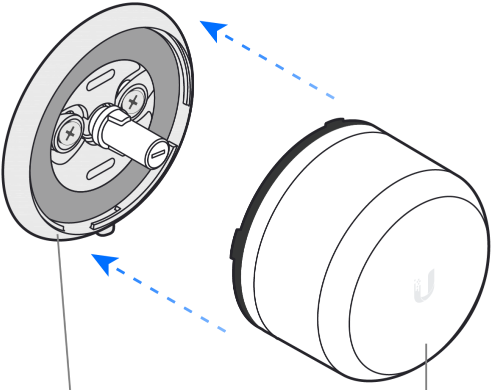

✓

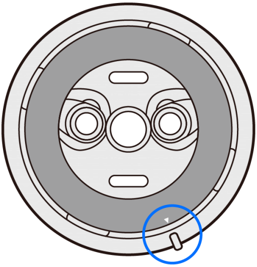

✓

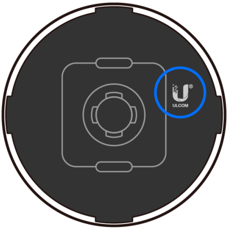

✗

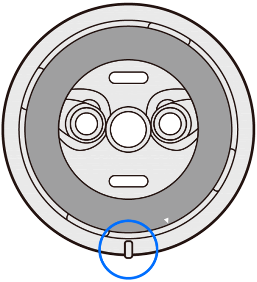

✗

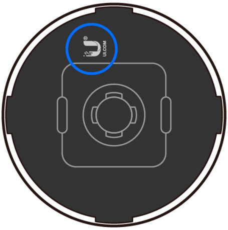

5

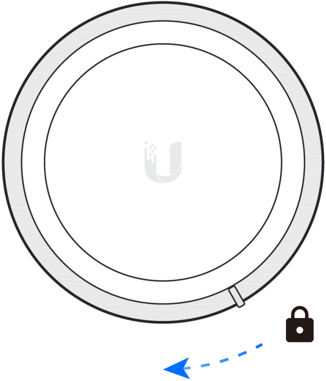

6

Download on the App Store

GET IT ON Google Play

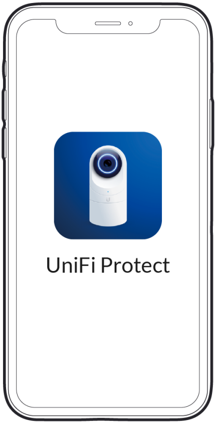
UniFi Protect

1

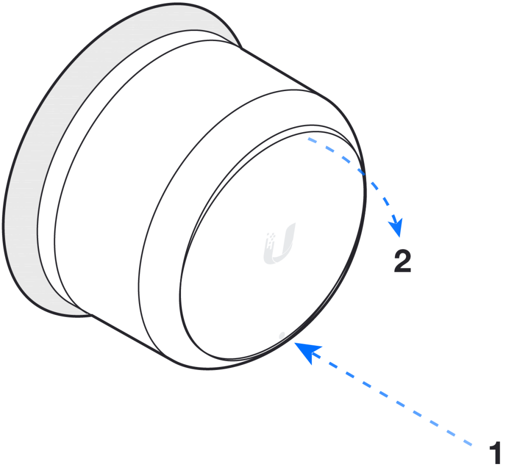

2

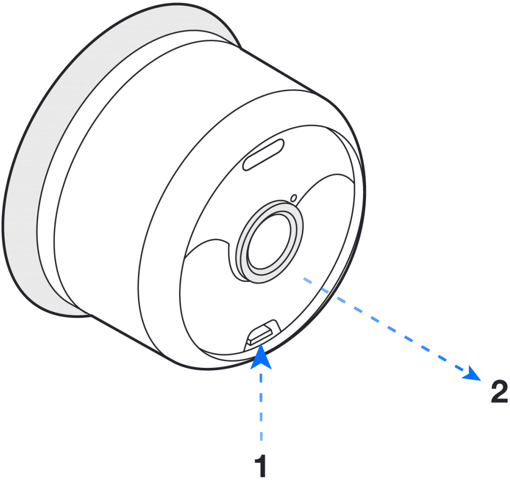

3

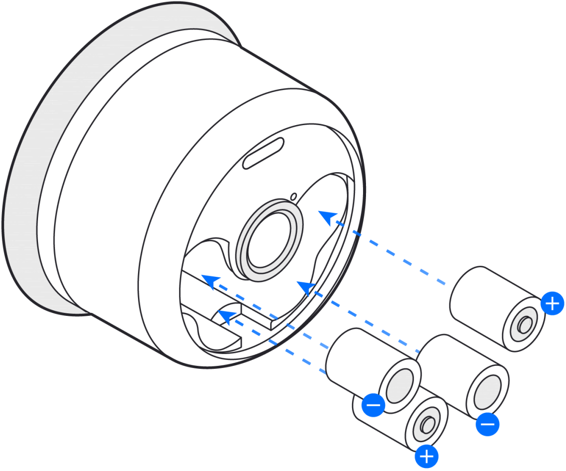

4

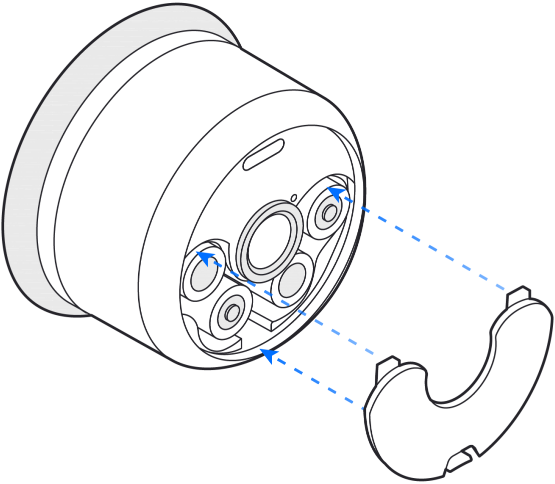

5

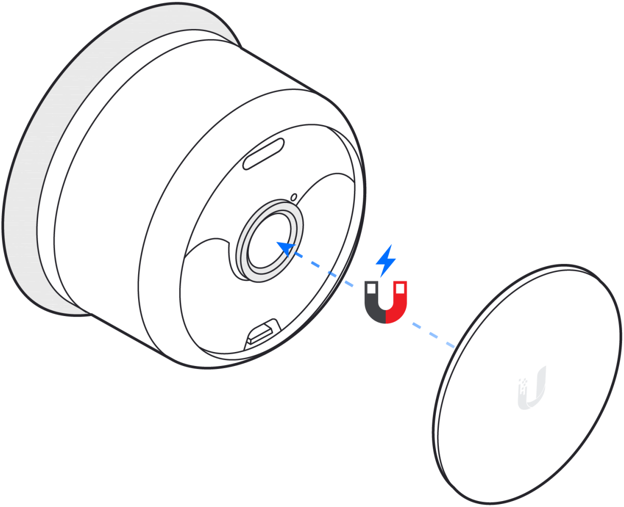

UniFi® Protect

Lock

Get Answers
community.ui.com