UniFi® Talk Conference

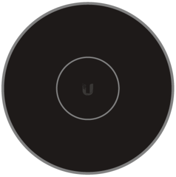

a

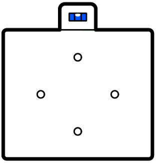

b

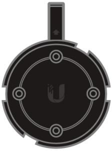

c

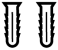

d

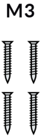

e

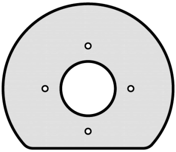

f

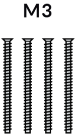

g

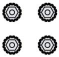

h

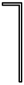

i

1

A

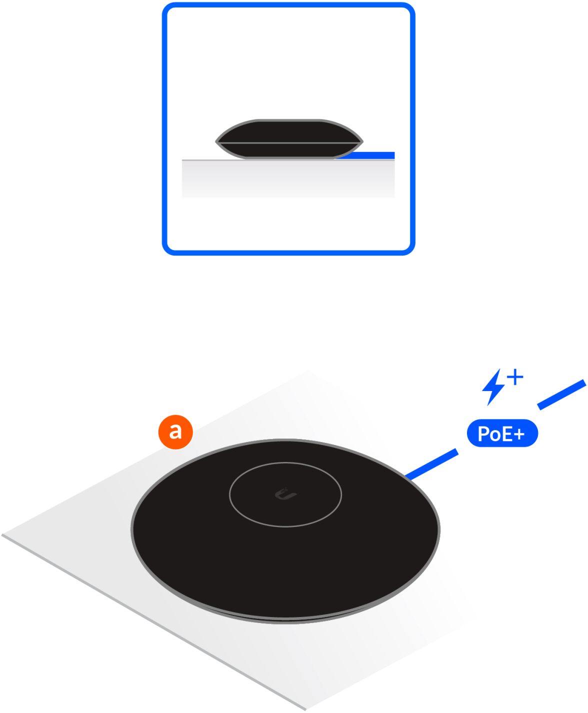

B

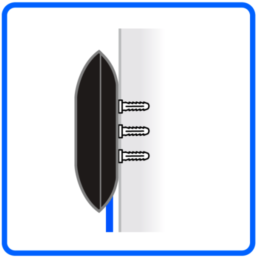

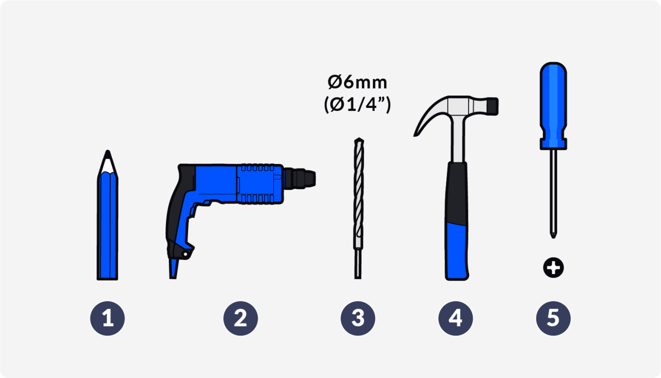
Ø6mm
(Ø1/4”)
1
2
3
4
5

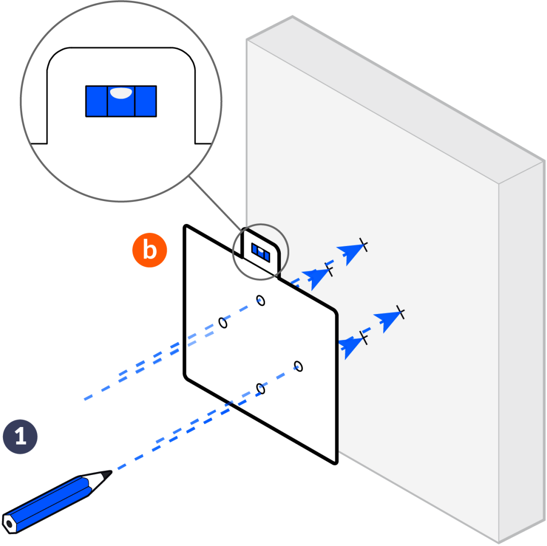

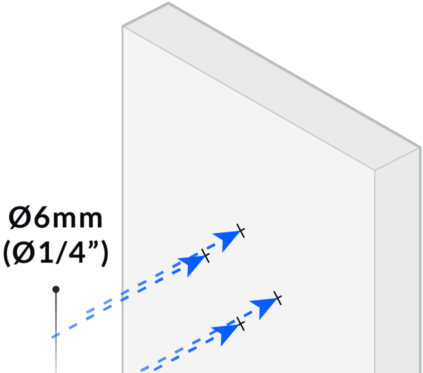

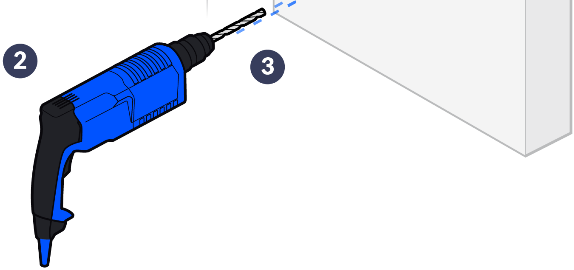

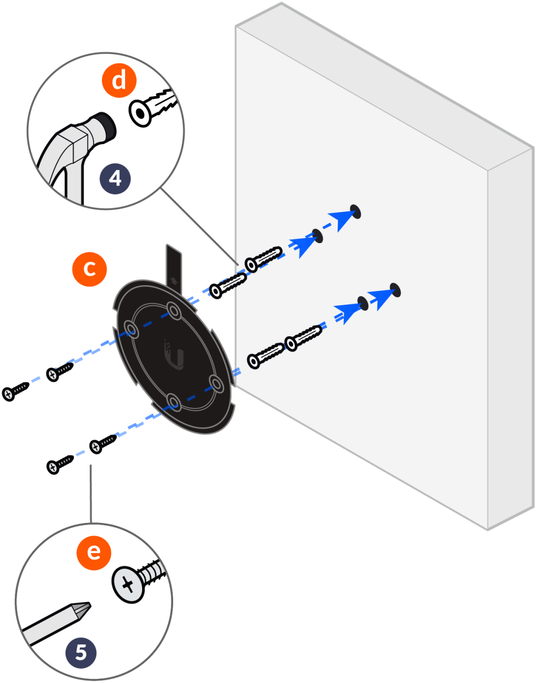

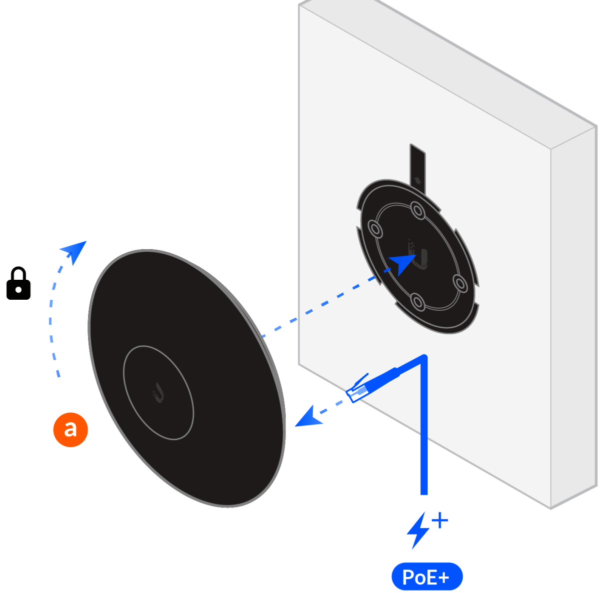

C

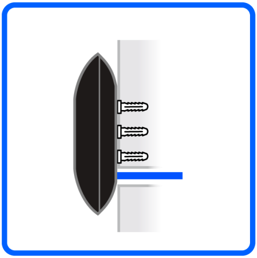

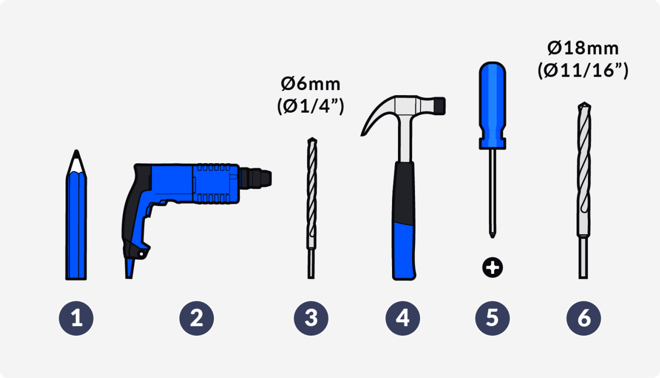
Ø6mm
(Ø1/4”)
Ø18mm
(Ø11/16”)
1
2
3
4
5
6

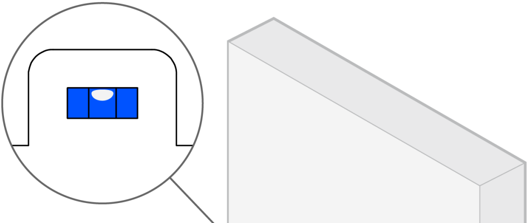

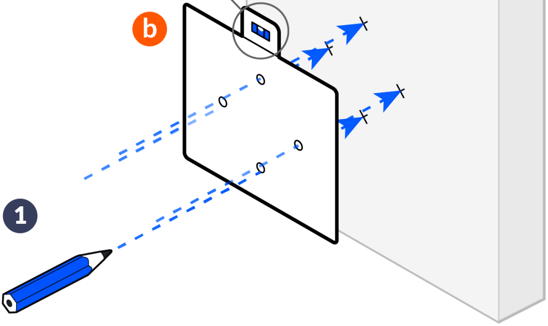

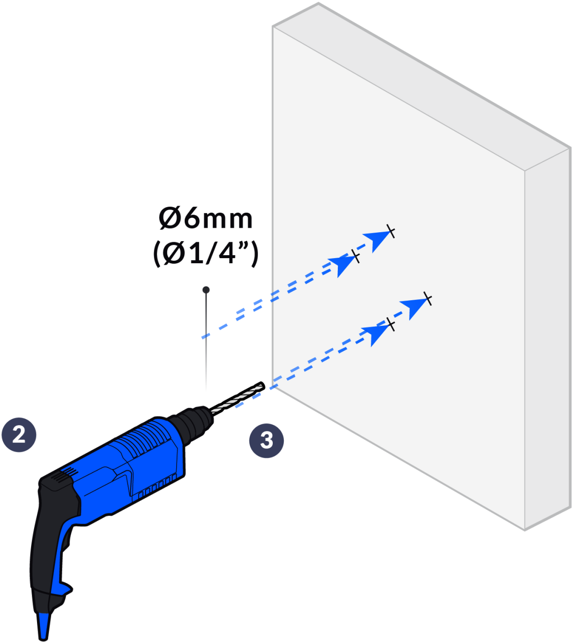

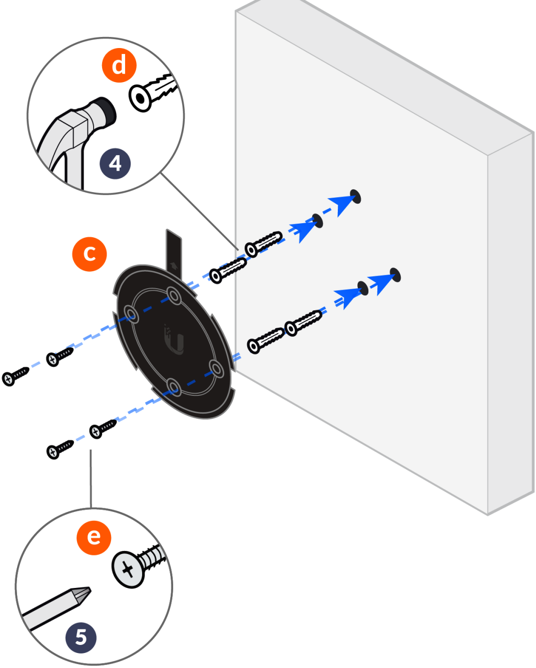

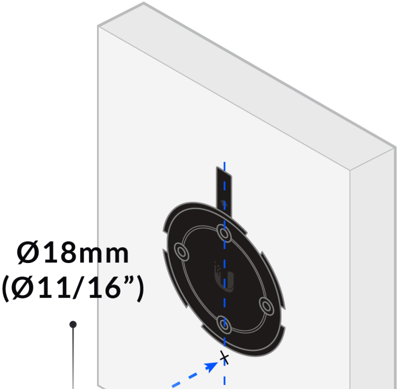
Ø18mm
(Ø11/16”)

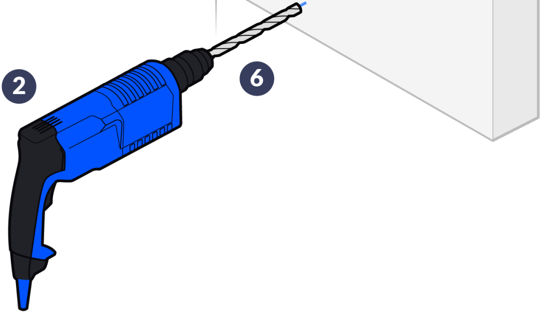

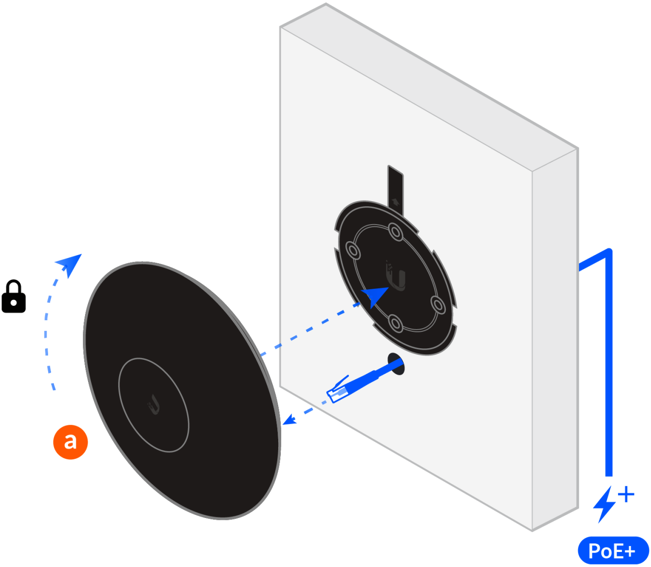

D

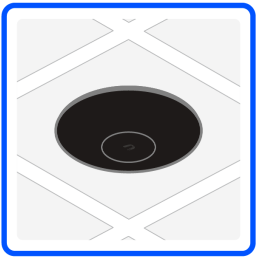

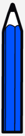

①

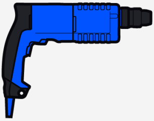

②

Ø6mm
(Ø1/4")

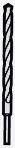

③

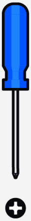

④

Ø18mm
(Ø11/16")

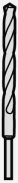

⑥

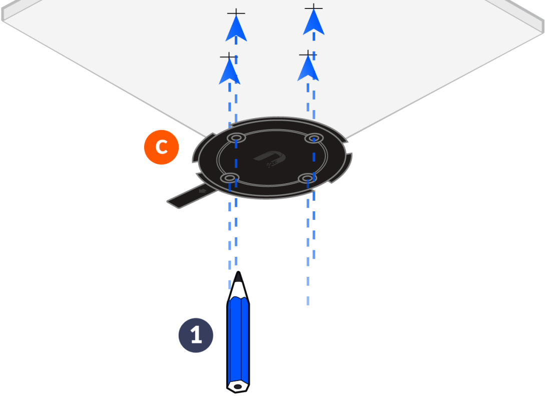

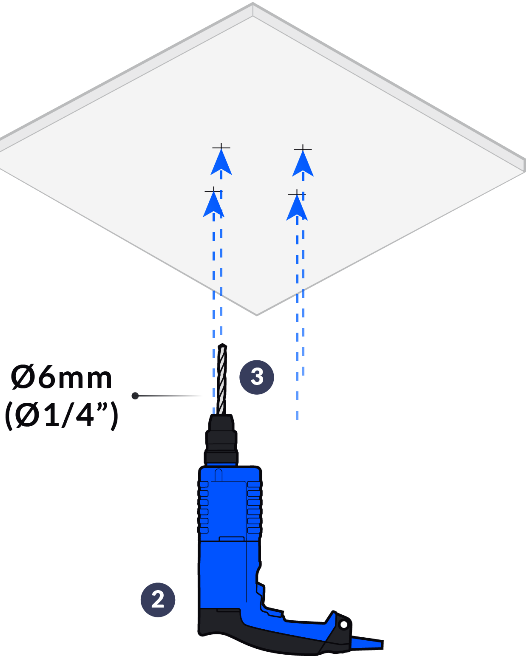

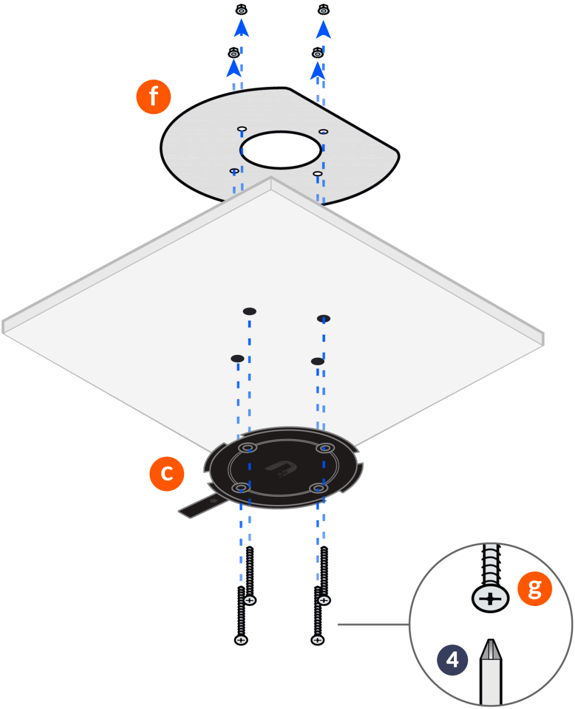

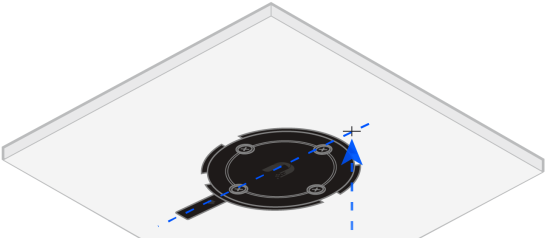

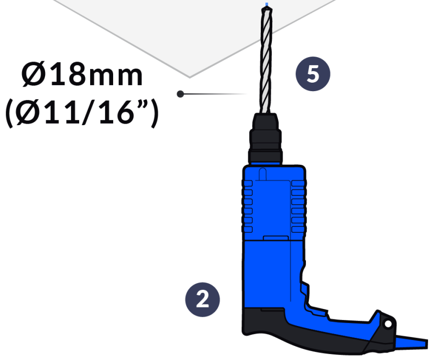
Ø18mm
(Ø11/16”)
5
2

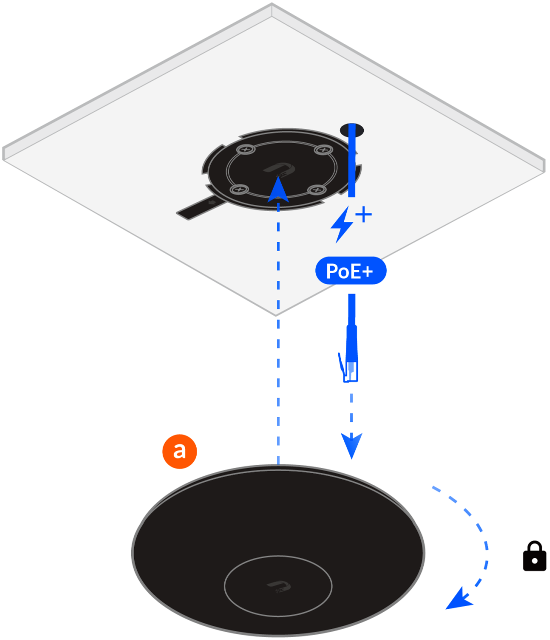

2

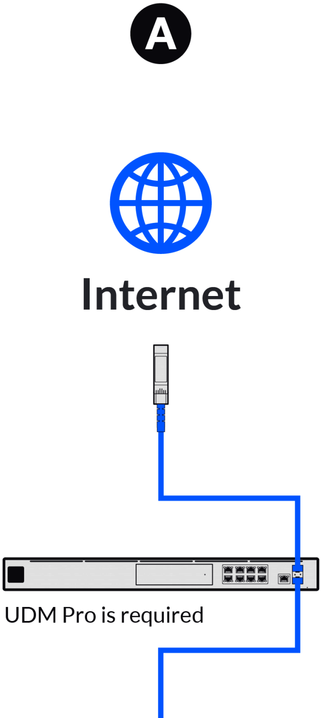

UDM Pro is required

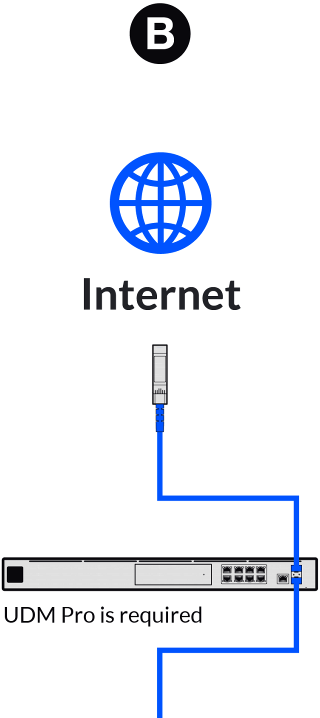

UDM Pro is required

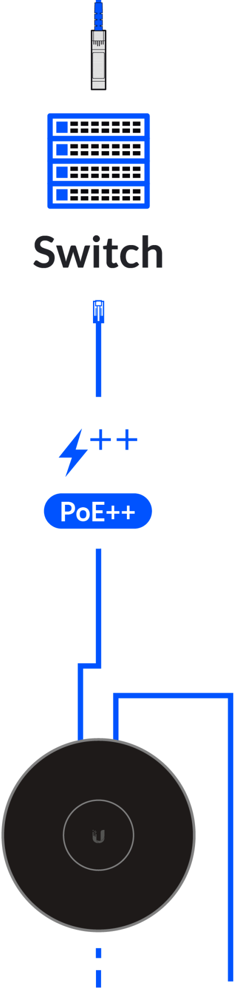

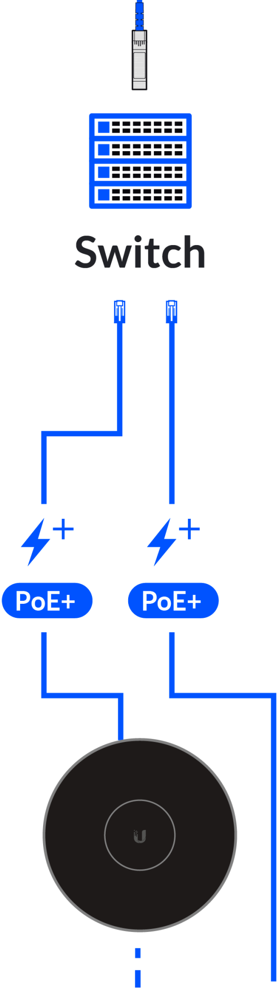
Switch
+
+
PoE+
PoE+

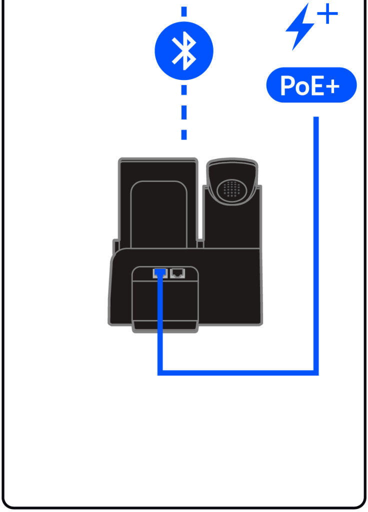

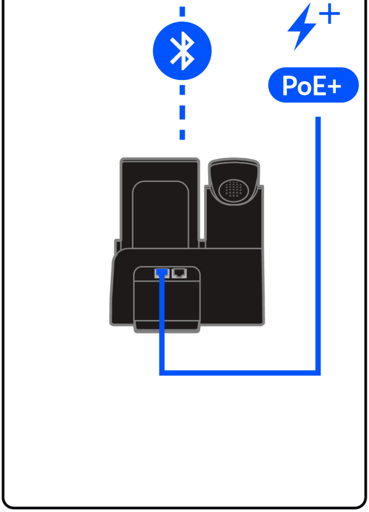

3

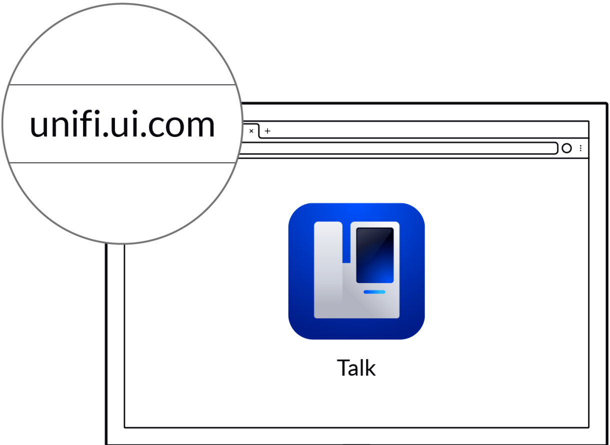
unifi.ui.com
Talk

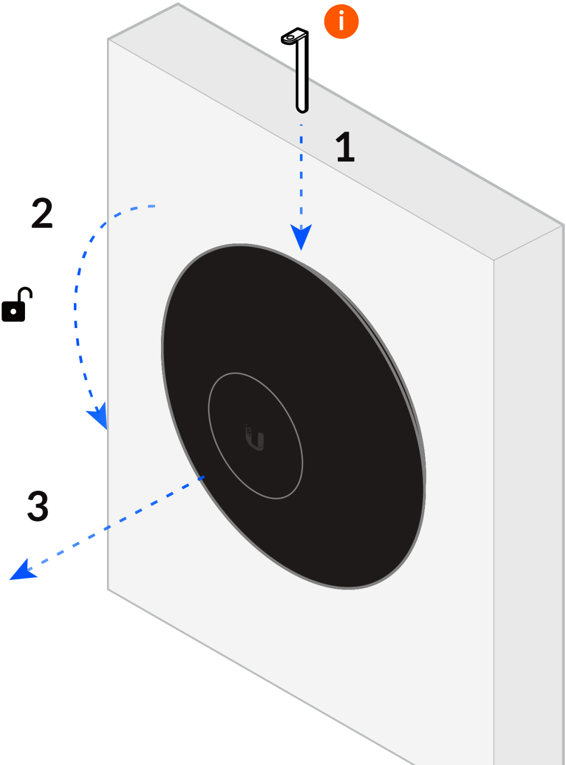

Get Answers
help.ui.com

UI Support

🔗