INDUSTRIE ELEKTRIK

KOSTAL

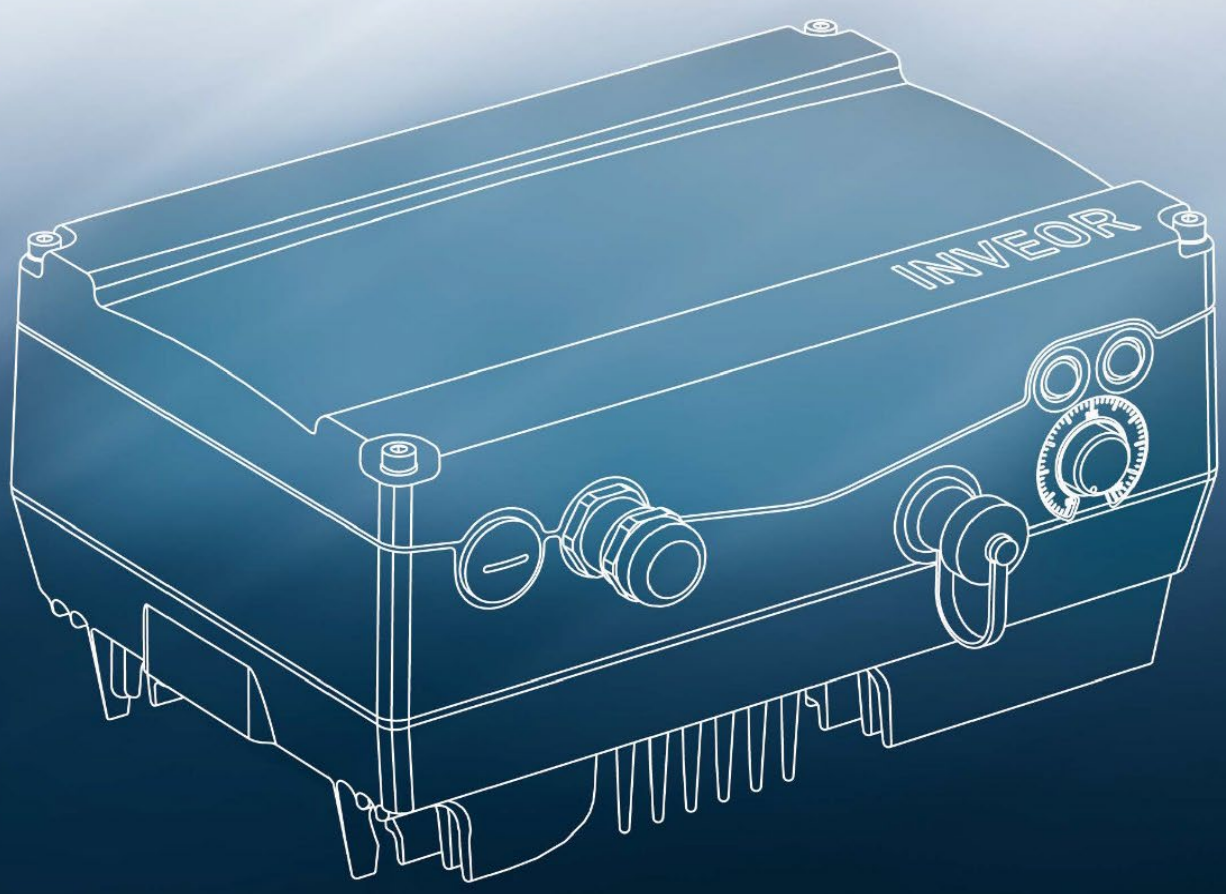

Smart connections.

Operating manual

INVEOR M Drive Controller

Legal notice

KOSTAL Industrie Elektrik GmbH
An der Bellmerei 10
58513 Lüdenscheid
Germany
Tel. +49 (0)2351 16-0
Fax + 49 (0)2351 16-2400
info-industrie@kostal.com

Register Court Iserlohn HRB 3924

IMPORTANT NOTE AND LIMITATIONS OF LIAILITY – READ TO UNDERSTAND RIGHTS AND LIMITATIONS

A. The information, recommendations, and other content of this Operating Manual ("Content") is provided as part of the sale of the referenced product and is subject to all limitations and disclaimers that apply to warrantees, remedies, and other provisions of the contract of sale. This includes those found in the General Terms and Conditions of Sale or similar document of the KOSTAL entity seller ("KOSTAL Seller") that sells the product, as available on its website or provided pursuant to a written request. Content supersedes all previous similar information published by KOSTAL unless specifically provided in writing by a KOSTAL Seller pursuant to a specific inquiry. The Content is that the Content is based on knowledge and experience of KOSTAL Industrie Elektrik GmbH as of the date of initial publication without any obligation to provide updates. For example, industry codes cited in the Content may change. All information provided by a KOSTAL company, regardless of nature or form, is prepared in good faith based upon our experience, mathematical models, and/or scientific models as general information only. However, inquiries on specific prospective product uses that may involve safety risks may be addressed to the KOSTAL central service hotline (see chapter 1 "General information").

B. The Content and all subsequently provided information and advice are provided without additional warranty. For example only, there is no warranty that the Content conforms to any specific national or international industry code or any law or government regulation except as specifically stated. There may be others that provide for more strict safety rules than those on which the Content is based. Mere reference to a specific code or regulation does not constitute a warranty that the Content or product meets the code or standard. In addition, the Content is expressed in general terms for general guidance and must be used in connection with such codes, laws, regulations, best industry practices, and common sense relevant to the specific condition in which KOSTAL product is used. However, errors can occur. The safe use of KOSTAL products is encouraged and users should ask for written clarification if the Content is not clear or adequate for a specific situation. Only written clarifications may be relief upon, and they must be used in connection with the relevant codes, laws, regulations and best industry practices. Any suggestions, projections, or similar information offered in writing, electronically by phone, in person, or in any other form are provided in good faith, but since the functionality and reliability of the products can vary with the application and with the equipment and other components with which they are used, and user skills, ALL WARRANTIES AND REPRESENTATIONS (OTHER THAN THE KOSTAL COMPANY'S NON-ASSIGNABLE STANDARD EXPRESS WRITTEN WARRANTY GIVEN TO DIRECT PURCHASERS FROM THE KOSTAL COMPANY SELLER), SUCH AS, BUT NOT LIMITED TO, ANY IMPLIED WARRANTY OF MERCHANTABILITY FITNESS FOR A PARTICULAR PURPOSE, AND NON-INFRINGEMENT OTHER THAN DIRECT INFRINGEMENT, ARE DISCLAIMED.

C. The specific use of the Content and product shall be at the user's own risk, and the user shall be responsible for observing in connection with the use of the product all national or international proprietary rights, laws and provisions relating to third party intellectual property rights.

D. A failure to comply with the Content or any clarifications provided could adversely effect the enforceability of any warranty or remedy.

E. This Manual was original prepared as of the month and year noted in the footer. Users of the product can download an updated version of the manual at any time from https://www.kostal-industrie-elektrik.com/INVEOR M drive controllers US Version

Exclusion of liability

All names, trademarks, product names or other designations used in this manual may be legally protected even if not indicated as such (e.g. as a trademark). KOSTAL assumes no liability for their free usage.

The illustrations and texts have been compiled with great care. However, the possibility of errors cannot be ruled out. The compilation is made without any guarantee.

General note on gender equality

KOSTAL is aware of how language impacts on gender equality and always make an effort to reflect this in documentation. Nevertheless, for the sake of readability we are unable to use non-gender-specific terms throughout and use the masculine form instead.

© 2021 KOSTAL Industrie Elektrik GmbH

All rights reserved by KOSTAL, including those of reproduction by photocopy and storage in electronic media. Commercial use or distribution of the texts, displayed models, diagrams and photographs appearing in this product is not permitted. This manual may not be reproduced, stored, transmitted or translated in any form or by means of any medium - in whole or in part - without prior written permission.

Contents

1. General information 5
1.1 Information about documentation 5
1.1.1 Other applicable documents 5
1.1.2 Storing the documentation 5
1.2 Notes in this manual..... 5
1.2.1 Warnings..... 5
1.2.2 Warning symbols used..... 6
1.2.3 Signal words..... 6
1.2.4 Information notes 7
Symbols within the information notes 7
Other notes.....7
1.3 Symbols used in this manual 7
Abbreviations used 7
1.4 Labels on the drive controller 8
1.5 Qualified staff 8
1.6 Proper use 9
1.7 Responsibility 9
Alcohol and drug use 9
1.8 Relevant standards and directives 10
North American standards.....10
1.9 Safety instructions 10
Personal protective equipment 10
1.9.1 General information..... 11
1.9.2 Transport & storage 12
1.9.3 Long-term storage 12
1.9.4 Information about commissioning 13
1.9.5 Instructions concerning operation..... 14
1.9.6 Maintenance and inspection..... 15
Measurement of insulation resistance on control part.....15
Measurement of insulation resistance on power part 16
Pressure test on an INVEOR.....16
1.9.7 Repairs..... 16
2. Overview of the drive controller.....17
2.1 Model description 17
2.1.1 Model description (valid until end of February 2016) 17
2.1.2 Model description (current)..... 18
2.2 Scope of delivery..... 19
2.3 PIN assignment MMI*/connecting cable..... 19
2.4 Description of the INVEOR drive controller.. 20
3. Installation 20
3.1 Recommended preliminary fuses / line protection 20
3.2 Installation requirements..... 21
3.2.1 Suitable ambient conditions 21
3.2.2 Suitable installation location for the motor-integrated drive controller 22
3.2.3 Basic connection versions..... 22
Triangle connection variant 23
Star connection variant.....24
3.2.4 Short-circuit and ground-fault protection 25
3.2.5 Wiring instructions 25
Control terminals (sizes A – D).....25
Power connections (sizes A – C) 26
Power connections (size D) 27
3.2.6 Preventing electromagnetic interferences ... 28
3.3 Installing the drive controller integrated in the motor 28
3.3.1 Mechanical installation..... 28
Mechanical installation of sizes A - C.....28
Mechanical installation of size D 31
3.3.2 Power connection 33
Power connection for size D.....35
3.3.3 Connections for brake resistor 36
3.3.4 Control connections X5, X6, X7 37
Control connections of the standard application board 37
X6 relay 1 40
X7 relay 40
Control connections of the basic application board 41
3.3.5 Connection diagram..... 42
3.4 Installing the wall-mounted drive controller. 43
3.4.1 Suitable installation location for wall mounting 43
3.4.2 Mechanical installation sizes A - C..... 44
3.4.3 Mechanical installation of size D 47
3.4.4 Power connection 50
3.4.5 Brake chopper..... 50
3.4.6 Control connections..... 50
3.5 Disassembly and assembly of the INVEOR fan, size "D"..... 51
3.5.1 Fan disassembly..... 51
3.5.2 Fan assembly 53
4. Commissioning 54
4.1 Safety instructions for commissioning 54
4.2 Communication 55
4.3 Block diagram 57
4.4 Commissioning steps..... 58
4.4.1 Commissioning using the PC:..... 58
4.4.2 Commissioning using PC, combined with MMI option..... 58
Turning the display 180° 59

5. Parameter ... 59
5.1 Safety instructions for working with parameters ... 59
5.2 General information on parameters ... 60
5.2.1 Explanation of operating modes ... 60
Frequency setting mode: ... 60
PID process control: ... 60
PID inverted: ... 60
An example: ... 60
Stand-by function in PID process control ... 61
Fixed frequency ... 62
5.2.2 Structure of the parameter tables ... 63
5.3 Application parameters ... 64
5.3.1 Basic parameter ... 64
5.3.2 Fixed frequency ... 69
5.3.3 Motor potentiometer ... 69
5.3.4 PID process controller ... 70
5.3.5 Analogue inputs ... 73
5.3.6 Digital inputs ... 76
5.3.7 Analogue output ... 76
5.3.8 Digital outputs ... 77
5.3.9 Relay ... 78
5.3.10 Virtual output ... 80
5.3.11 External fault ... 81
5.3.12 Motor current limit ... 82
5.3.13 Stall detection ... 82
5.3.14 Additional function ... 83
5.3.15 MMI Parameters ... 84
5.3.16 Fieldbus ... 85
5.3.17 Bluetooth ... 87
5.4 Performance parameters ... 88
5.4.1 Motor data ... 88
5.4.2 I^2t 91
5.4.3 Switching frequency ... 91
5.4.4 Controller data ... 91
5.4.5 Quadratic characteristic curve ... 93
5.4.6 Synchronous motor controller data ... 94

6. Error detection and troubleshooting ... 95
6.1 List of the LED flash codes for error recognition ... 95
6.2 List of errors and system errors ... 96

7. Disassembly and disposal ... 99
7.1 Drive controller disassembly ... 99
7.2 Information on correct disposal ... 99

8. Technical data ... 100
8.1 General data ... 100
8.1.1 General technical data for 400V devices ... 100
8.1.2 General technical data for 230 V devices ... 101
8.1.3 Specification of interfaces ... 102
8.1.4 Power loss table ... 103
8.2 Derating of output power ... 104
8.2.1 Derating due to increased ambient temperature ... 104
8.2.2 Derating due to installation altitude ... 105
8.2.3 Derating due to switching frequency ... 106
INVEOR M BG. A – D (0.37 kW – 15 kW) ... 106
INVEOR M BG. D (18.5 kW) ... 107
INVEOR M BG. D (22 kW) ... 107

9. Optional accessories ... 108
9.1 Adapter plates ... 108
9.1.1 Motor adapter plates ... 108
9.1.2 Motor adapter plates (specific) ... 111
9.1.3 Wall adapter plates (standard) ... 111
9.2 Foil keypad ... 113
9.3 MMI handheld controller including a 3 m RJ9 connection cable with M12 plug ... 115
9.4 PC communication cable USB on M12/RS485 plug (converter integrated) ... 115
9.5 Bluetooth stick M12 ... 115

10. Approvals, standards and guidelines ... 116
10.1 EMC limit classes ... 116
10.2 Classification acc. to IEC/EN 61800-3 ... 117
Definition of environment ... 117
10.3 Harmonics currents and grid impedance for devices > 16 A and ≤ 75 A ... 117
10.4 Standards and guidelines ... 117
10.5 UL approval ... 118
10.5.1 UL Specification (English version) ... 118
Required Markings ... 118
Short circuit current rating (SCCR) ... 119
10.5.2 Homologation CL (Version en française) ... 120
Mentions requises ... 120
Short circuit current rating (SCCR) ... 121

11. Quickstart guide ... 122
11.1 Quickstart guide ... 122
11.2 Quickstart guide for synchronous motors ... 123

12. Index ... 124

1. General information

Thank you for choosing an INVEOR drive controller from KOSTAL Industrie Elektrik GmbH!
Our INVEOR drive controller platform is designed to be universally usable with all common motor types.

If you have any technical questions, please call our central service hotline:

Tel.:	+49 (0)2331 80 40-848 Monday to Friday: 7 am to 5 pm (UTC/GMT +1)
Fax:	+49 (0)2331 80 40-602
E-mail	INVEOR-service@kostal.com Drives@kostal.com
Website address:	www.kostal-industrie-elektrik.com

1.1 Information about documentation

The following information explains how to navigate through the documentation.

Read this manual carefully in its entirety. It contains important information for operating the INVEOR.

We assume no liability for any damage resulting from non-observance of this manual.

This manual is an integral part of the product and applies exclusively to the INVEOR from KOSTAL Industrie Elektrik GmbH.

Provide the operator of the system with this manual so it is available when needed.

1.1.1 Other applicable documents

This refers to all manuals that describe how to operate the drive controller system and any other manuals for the equipment used. Download the 3D files (.stp) for INVEOR and adapter plates from www.kostal-industrie-elektrik.com/downloads/downloadmanager#Antriebstechnik

A description of parameters is available for download (www.kostal-industrie-elektrik.com/downloads/downloadmanager#Antriebstechnik) for parameterising the drive controller.
In the download, you will find all the information required for correct parameterisation.

1.1.2 Storing the documentation

Store this operating manual and all other applicable documents carefully so they are available when needed.

1.2 Notes in this manual

1.2.1 Warnings

The warnings refer to life-threatening dangers. Serious injuries possibly resulting in death may occur.

Each warning consists of the following elements:

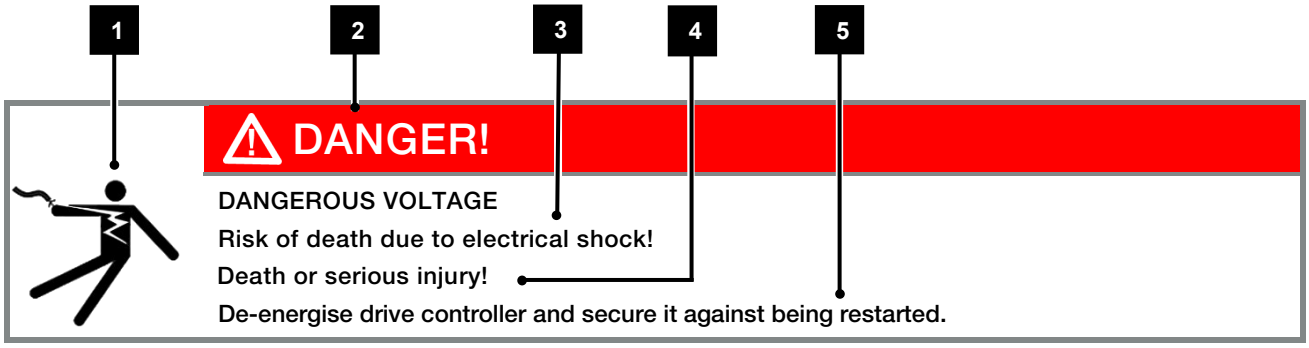

Abb. 1: Aufbau der Warnhinweise

1	Warning symbol	4	Possible consequence(s) of failure to comply
2	Signal word	5	Corrective actions
3	Type of danger and its source		

1.2.2 Warning symbols used

Symbol	Meaning
	Dangerous voltage
	Danger
	Danger due to electrical shock and discharge
	Danger due to electromagnetic fields

1.2.3 Signal words

Signal words are used to identify the severity of the danger.

⚠ DANGER!

Indicates a direct hazard with a high level of risk, which, if not avoided, will result in death or serious injury.

⚠ WARNING!

Indicates a hazard with a moderate level of risk, which, if not avoided, will result in death or serious injury.

⚠ CAUTION!

Indicates a hazard with a low level of risk, which, if not avoided, may result property damage.

1.2.4 Information notes

Information notes contain important instructions for the installation and problem-free operation of the drive controller. These must be followed at all times.
The information notes also point out that failure to observe can result in damage to property or financial damages.

NOTICE
The drive controller may only be assembled, operated, maintained and installed by trained and qualified staff.

Fig. 2: Example of an information note

Symbols within the information notes

Symbol	Meaning
!	NOTICE
	DAMAGE TO PROPERTY POSSIBLE

Other notes

Symbol	Meaning
!	NOTICE
	Enlarged view

1.3 Symbols used in this manual

Symbol	Meaning
■	List

Fig. 3: Symbols and icons used

Abbreviations used

Abbreviation	Explanation
Tab.	Table
Fig.	Figure
It.	Item
Ch.	Chapter

1.4 Labels on the drive controller

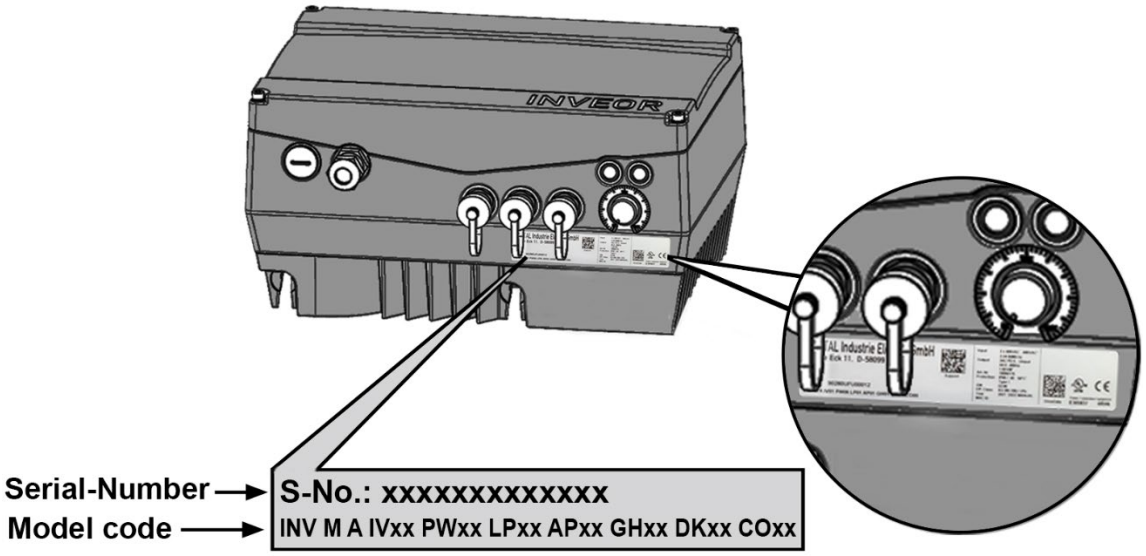

Fig. 4: Labels on the drive controller

Signs and labels are affixed to the drive controller. These may not be altered or removed.

Symbol	Meaning
	Danger due to electrical shock and discharge
	Dangerous voltage
2 min	Danger due to electrical shock and discharge. Wait two minutes (discharge time of the capacitors) after shut-down
	Additional earth connection
	Observe and read operating manual

1.5 Qualified staff

NOTICE

In the context of this operating manual, qualified staff refers to electronics specialists who are familiar with the installation, assembly, commissioning and operation of the drive controller and the dangers involved, and whose specialist training and knowledge of relevant standards and regulations provide them with the necessary abilities.

1.6 Proper use

If the device is installed in a machine, drive controllers may not be commissioned (i.e. intended operation may not begin) until it has been determined that the machine complies with the regulations of EC Directive 2006/42/EC or US National Electrical Code NFPA 70 (Machinery Directive); DIN EN 60204-1; VDE 0113-1; NFPA 70 must be observed.

Commissioning (i.e. beginning intended operation) is only permitted if the EMC Directive (2014/30/EU) is complied with.

The harmonised standards of DIN EN 50178; VDE 0160 must be applied for this drive controller along with DIN EN 61439-1/DIN EN 61439-2; VDE 0660-600.

Always perform all operations on the drive controller in accordance with the US National Electrical Code NFPA 70.

NOTICE

- This drive controller may not be operated in areas where there is a danger of explosion!
- Repairs may only be performed by authorised repair bodies.
- Independent and unauthorised intervention may result in death, injury or property damage.
  The warranty provided by KOSTAL will be invalidated in such cases.
- External mechanical loads on the housing are not permitted!
- Using drive controllers in equipment that is not fixed is considered as an exceptional environmental condition and is only permitted if allowed by the standards and guidelines applicable on site.

1.7 Responsibility

Alcohol and drug use

NOTICE

The consumption of alcohol and or drugs is strictly PROHIBITED before entering and for the time of stay at the workplace!

NOTICE

As a basic principle, electronic devices are not fail-safe. The operator and/or the contractor setting up the machine or system is responsible for ensuring that the drive switches to a safe state if the device fails.

The “Electrical equipment of machines” section in DIN EN 60204-1; VDE 0113-1, “Safety of machinery” describes the safety requirements for electrical control units. These are provided for the safety of people and machines and must be observed in order to retain the functional capability of the machine or system.

NOTICE

An emergency stop feature does not have to result in the voltage supply to the drive being switched off. To avoid dangerous situations, it may be useful for individual drives to remain operational or for specific safety procedures to be initiated.
The effectiveness of emergency stop measures is evaluated by means of a risk assessment for the machine or system and its electrical equipment, and is determined by selecting a circuit category according to DIN EN 13849 “Safety of machinery – Safety-related parts of control systems”.

1.8 Relevant standards and directives

KOSTAL Industrie Elektrik GmbH hereby declares that the drive controller described in this document complies with the basic requirements and other relevant conditions of the directives listed below.

- Directive 2014/30/EU
  (on the approximation of the laws of the Member States relating to electromagnetic compatibility (EMC)).
- Directive 2014/35/EU
  (on the harmonisation of the laws of the Member States relating to the making available on the market of electrical equipment designed for use within certain voltage limits – in short: Low Voltage Directive).
- Directive 2011/65/EU
  (Restriction of the use of certain hazardous substances in electrical and electronic equipment, in short: RoHS Directive)
- Directive 2014/53/EU
  (relating to the making available on the market of radio equipment and repealing Directive 1999/5/EC)

You will find a detailed EU Declaration of Conformity at:

www.kostal-industrie-elektrik.com/EU-Konform-INVEOR

North American standards

- UL 508 C
- CSA C22.2 No. 274

1.9 Safety instructions

The following warnings, precautionary measures and information are provided for your safety and serve to prevent damage to the drive controller and the components connected to it.
This chapter contains warnings and information that are generally applicable when handling drive controllers. They are split into general information, transport & storage and dismantling & disposal.

Specific warnings and comments that apply to specific activities can be found at the start of the appropriate chapters and are repeated or added to at various critical points in these chapters.

Please read this information carefully as it is provided for your personal safety and will also prolong the life of the drive controller and connected devices

Personal protective equipment

NOTICE

Before carrying out any work on the drive controller, please put on your personal protective equipment, e.g. helmet, safety goggles, safety shoes.

If necessary, observe any additional national regulations!

1.9.1 General information

NOTICE

- Carefully read this operating manual and the warning signs affixed to the drive controller before installation and commissioning. Make sure that all warning signs on the drive controller are legible; replace any missing or damaged signs.

  They contain important information on the installation and operation of the drive controller. In particular, note the information in the "Important information" chapter.

  KOSTAL Industrie Elektrik GmbH assumes no liability for damages arising from the non-observance of this operating manual.

  This operating manual is an integral part of the product. It applies exclusively to the drive controller from KOSTAL Industrie Elektrik GmbH.

  Keep the operating manual close to the drive controller so it is easily accessible to all users.

- The drive controller can only be operated safely if the required environmental conditions listed in the “Suitable environmental conditions” chapter are met.

DANGER!

Risk of death due to electrical shock!
Death or serious injury!
De-energise drive controller and secure it against being restarted.

DANGER!

Risk of death due to electrical shock!
Death or serious injury!
Always ground the device in accordance with DIN EN 61140; VDE 0140, NEC and other relevant standards.

The drive controller must be grounded with the motor according to relevant regulations. Non-compliance may result in death or serious injury.

If spring elements are not used when assembling the adapter plate, there must be an extra connection between the motor and drive controller to produce a correct protective conductor connection.

DANGER!

Risk of death due to revolving mechanical parts!
Death or serious injury!
De-energise drive controller and secure it against being restarted.

DANGER!

Risk of death due to fire or electrical shock!
Death or serious injury!
Always use the drive controller as intended.
Do not modify the drive controller.
Only use spare parts and accessories sold or recommended by the manufacturer.
During assembly, ensure a sufficient distance from neighbouring parts.

WARNING!

Risk of burns from hot surfaces!
Serious burns to the skin from hot surfaces!
Allow the drive controller's cooling elements to cool sufficiently.

1.9.2 Transport & storage

DAMAGE TO PROPERTY POSSIBLE

- Risk of damage to drive controller!
- Risk of damage to drive controller from improper transport, storage, installation and assembly!
- In general, transport the drive controller correctly in its original packaging on a pallet.
- Always store the drive controller properly.
- Only allow qualified staff to undertake installation and assembly.

1.9.3 Long-term storage

DAMAGE TO PROPERTY POSSIBLE

If devices with a single-phase feed-in have been in storage for more than 2 years, the following regeneration process is required before installation / use under the nominal conditions:

- The drive controller must be connected to supply voltage (+/- 3 %) for 30 minutes without the device being loaded. This applies to the motor connection as well as possible consumers and connections to the application.
- Perform this process once before commissioning.
- In all cases, observe the general requirements for storing drive controllers!

1.9.4 Information about commissioning

⚠ DANGER!

Risk of death due to electrical shock!

Death or serious injury!

De-energise drive controller and secure it against being restarted.

The following terminals may lead to dangerous currents even when the motor is not running:

- Supply terminals X1: L1, L2, L3
- Motor connection terminals X2: U, V, W
- Connecting terminals X6, X7: Relay contacts for relays 1 and 2
- PTC terminals T1/ T2

! NOTICE

- If different voltages are used (e.g. +24 V/230 V), crossing cable runs are not permitted under any circumstances. The operator must also ensure compliance with the applicable regulations (e.g. double or reinforced insulation acc. to DIN EN 61800-5-1).
- The drive controller contains components susceptible to electrical discharge.
  These may be destroyed through improper handling. Therefore, precautionary measures against electrostatic charges must be taken when work is performed on these components.

! NOTICE

- Only use mains connections with hardwiring.
- Ground the drive controller in accordance with DIN EN 61140; VDE 0140-1.
- The INVEOR may have touch currents of > 3.5 mA.
  In accordance with DIN EN 61800-5-1, an extra protective grounding conductor of the same cross-section as the original protective grounding conductor should therefore be fitted. A second protective grounding conductor can be connected under the mains supply
  (position marked with a ground symbol) on the outside of the device. A M6 x 0,47 inch(12 mm) screw (4.0 Nm torque) suitable for this connection is provided with the adapter plate.
- If three-phase frequency inverters are used, the use of conventional type A FI protection switches RCDs (residual current-operated protective devices) are not permissible as protection against direct or indirect contact.
  According to DIN VDE 0160 and EN 50178, the FI protection switch must be universal current sensitive (RCD type B).

1.9.5 Instructions concerning operation

⚠ DANGER!

Risk of death due to electrical shock!
Death or serious injury!
De-energise drive controller and secure it against being restarted.

⚠ DANGER!

Risk of death due to revolving mechanical parts!
Death or serious injury!
De-energise drive controller and secure it against being restarted.

! NOTICE

Observe the following instructions during operation:

- The drive controller runs at high voltages.
- When electrical devices are operated, some of their parts are always subject to dangerous voltage.
- Emergency stop equipment according to DIN EN 60204-1; VDE 0113-1:2007-06 must function in all the control device's operating modes.
  Resetting the emergency stop equipment may not result in uncontrolled or undefined restarting.
- In order to ensure safe disconnection from the mains, the mains cable has to be fully disconnected from the drive controller in a synchronous manner.
- A pause of at least 1 to 2 mins must be observed between consecutive mains activations for devices with a single-phase feed and for size D (11 to 22 kW).
- A pause of at least 3 sec. must be observed between consecutive grid connections for devices with three-phase feed-in in sizes A - C (0.55 to 7.5 kW).
- Certain parameter settings may result in the drive controller restarting automatically after the supply voltage has failed.

DAMAGE TO PROPERTY POSSIBLE

If the information is not observed, the drive controller could be damaged and destroyed during subsequent commissioning.

Observe the following instructions during operation:

- The motor parameters, especially the I^2t settings, have to be configured properly to provide proper motor overload protection.
- The drive controller has internal motor overload protection. See parameters 33.010 and 33.011.
  I^2t is ON by default. Motor overload protection can also be ensured via an external PTC.
- The drive controller must not be used as "Emergency stop equipment"
  (see DIN EN 60204-1; VDE 0113-1:2007-06).

1.9.6 Maintenance and inspection

NOTICE

The drive controllers may only be maintained and inspected by electricians with recognised training. Unless explicitly described in this operating manual, changes to hardware and software may only be undertaken by KOSTAL experts or persons authorised by KOSTAL.

Cleaning the drive controllers

Drive controllers are maintenance-free if operated as intended. If the air contains dust, the cooling fins of the motor and drive controller have to be cleaned regularly.
If devices are fitted with integrated fans (optional for size C, standard for size D), we would recommend cleaning with compressed air.

Measurement of insulation resistance on control part

An insulation test on the control card's input terminals is not permitted

Measurement of insulation resistance on power part

The power part of an INVEOR is tested with 2.02 kV in the course of series testing.

Should the insulation resistance have to be measured during a system test, this can be done under the following conditions:

- an insulation test can be undertaken for the power part alone,
- to avoid excessively high voltages, all the INVEOR's connection cables must be disconnected before testing,
- a 500 V DC insulation tester should be used.

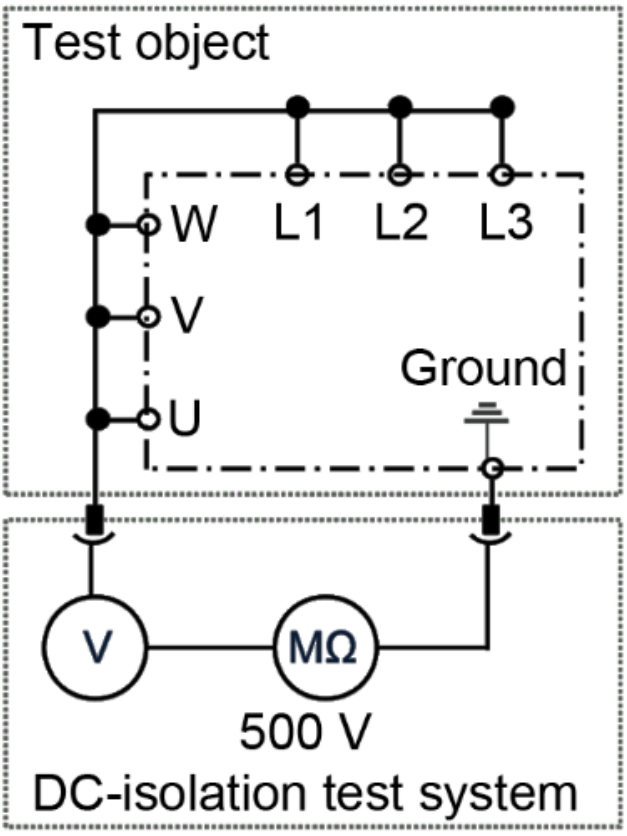

Fig. 5: Insulation test on the power board

Pressure test on an INVEOR

NOTICE

A pressure test is not permitted on a standard INVEOR.

1.9.7 Repairs

DAMAGE TO PROPERTY POSSIBLE

If the information is not observed, the drive controller could be damaged and destroyed during subsequent commissioning.

- Repairs to the drive controller may only be performed by the KOSTAL Service department.

DANGER!

Risk of death due to electrical shock!

Death or serious injury!

De-energise drive controller and secure it against being restarted.

DANGER!

Danger due to electrical shock and discharge. Wait two minutes (discharge time of the capacitors) after shut-down.

2. Overview of the drive controller

This chapter contains information on the scope of delivery for the drive controller and the function description.

2.1 Model description

2.1.1 Model description (valid until end of February 2016)

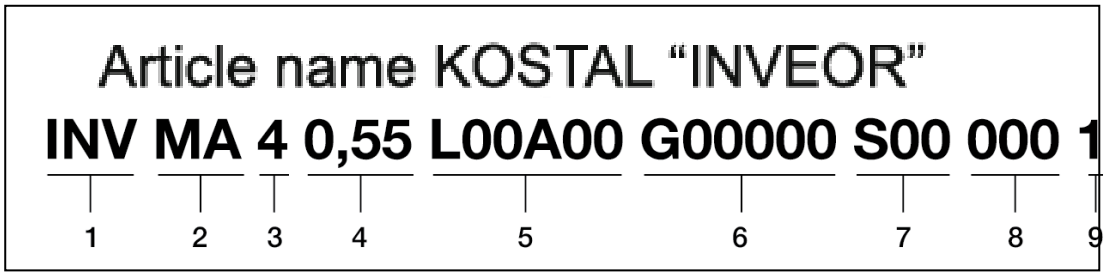

Fig. 6: Item description

Key			
1	Drive controller series: INVEOR	6	Housing: G0 – standard (black with inscription); 0 – standard (cooling elements); 0 – standard (with potentiometer); 00 – standard screw connections
2	Installation location/size: M-motor-integrated, size: A, B, C, D	7	Firmware version: S00 – standard
3	Input voltage: 2 – 230 V, 4 – 400 V	8	Model: 000 standard; 001 specific
4	Recommended motor rating: 0.55; 0.75; 1.1; 1.5; 2.2; 3.0; 4.0; 5.5; 7.5; 11; 15; 18.5; 22 kW	9	Equipment generation: 1 – current version
5	Printed circuit boards: L00 – standard (without brake chopper); A00 – standard (without TTL evaluation); – standard (without fieldbus)		

2.1.2 Model description (current)

	Drive controller type, size											
INV M A	Inverter, size A											
INV M B	Inverter, size B											
INV M C	Inverter, size C											
INV M D	Inverter, size D											
		Supply voltage							A	B	C	D
	IV01	400 V							x	x	x	x
	IV02	230 V							x			
			Recommended motor rating						A	B	C	D
		PW02	0.37 kW (1 x 230 VAC)						x			
		PW03	0.55 kW (1 x 230 VAC / 3 x 400 VAC)						x			
		PW04	0.75 kW (1 x 230 VAC / 3 x 400 VAC)						x			
		PW05	1.10 kW (1 x 230 VAC / 3 x 400 VAC)						x			
		PW06	1.50 kW (3 x 400 VAC)						x			
		PW07	2.20 kW							x		
		PW08	3.00 kW							x		
		PW09	4.00 kW							x		
		PW10	5.50 kW								x	
		PW11	7.50 kW								x	
		PW12	11.00 kW									x
		PW13	15.00 kW									x
		PW14	18.50 kW									x
		PW15	22.00 kW									x
				Power-conducting plate					A	B	C	D
			LP01	Without brake chopper					x	x	x	
			LP02	With brake chopper					x	x		
			LP03	Without brake chopper								x
			LP04	With brake chopper							x	x
					Application PCB				A	B	C	D
				AP01	Default				x	x	x	x
				AP03	Basic				x	x	x	
				AP05	Standard + CANopen				x	x	x	x
				AP06	Standard + EtherCAT				x	x	x	x
				AP09	Standard + PROFINET				x	x	x	x
				AP14	Standard + Sercos III				x	x	x	x
				AP16	Standard + PROFIBUS				x	x	x	x
				AP10	Functional safety				x	x	x	x
				AP21	Functional safety + CANopen				x	x	x	x
				AP22	Functional safety + EtherCAT				x	x	x	x
				AP23	Functional safety + PROFINET				x	x	x	x
				AP24	Functional safety + Sercos III				x	x	x	x
				AP25	Functional safety + PROFIBUS				x	x	x	x
						Housing type			A	B	C	D
					GH01	Passive cooling type, potentiometer, standard screw conn.			x	x	x	
					GH02	Passive cooling, standard screw conn.			x	x	x	
					GH06	Active cooling, potentiometer, standard screw conn.						x
					GH09	Active cooling, standard screw conn.						x
							Cover type		A	B	C	D
						DK01	Cover without foil keypad		x	x	x	x
						DK02	Cover with foil keypad and potentiometer (only with GH02), (size D only with GH09)		x	x	x	x
						DK05	Cover with integrated MMI		x	x	x	x
								Model	A	B	C	D
							CO00	KOSTAL - standard	x	x	x	x
INV Mx	IVxx	PWxx	LPxx	APxx	GHxx	DKxx	COxx					

2.2 Scope of delivery

Compare the scope of delivery of your product with that provided below.

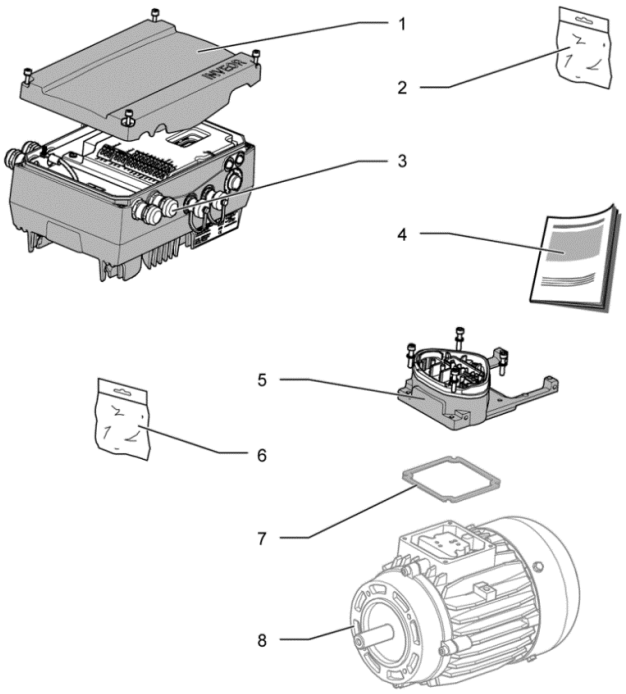

Fig. 7: Scope of delivery

Key	
Drive controller article number	
1	Drive controller (variant)
2	Poly bag containing fastening bolts
3	Cable screw connections
4	Operating manual
Adapter plate article number	
5	Adapter plate with terminal (not part of the scope of delivery)
6	Poly bag containing connecting material for terminal block
7	Seal (not part of the scope of delivery)
8	Motor (not part of the scope of delivery)

2.3 PIN assignment MMI*/connecting cable

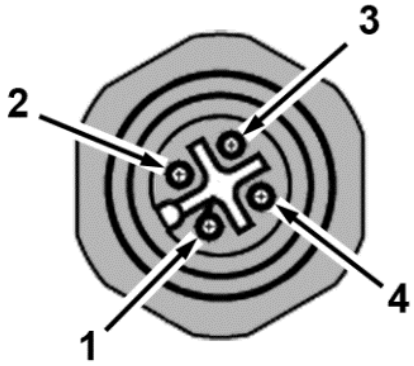

Fig. 8: M12 plug PIN assignment

Description: Round plug (plug)
4-pin M12 A-coded

M12 plug assignment	Signal
1	24 V
2	RS485 - A
3	GND
4	RS485 - B

Description: RJ9 plug connector

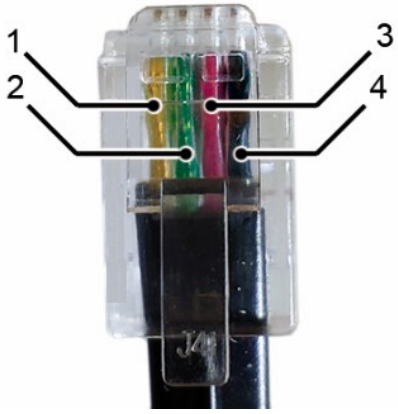

Pin	Signal
1	yellow
2	green
3	Red
4	brown
Attention: The colours may vary!	

* Man-machine interface

2.4 Description of the INVEOR drive controller

The INVEOR drive controller is a device for the speed control of three-phase AC motors.

The drive controller can be integrated in the motor (with the standard adapter plate) or fitted close to the motor (with the wall installation adapter plate).

The permitted ambient temperatures specified in the technical data refer to operation at nominal load.
In many cases, higher temperatures may be permitted after a detailed technical analysis.
These have to be approved by KOSTAL on a case-by-case basis.

3. Installation

⚠ DANGER!

Risk of death due to revolving mechanical parts!

Death or serious injury!

De-energise drive controller and secure it against being restarted.

Only allow appropriately qualified staff to install the drive controller.

Only use staff who are trained in mounting, installation, commissioning and handling.

Always ground the device in accordance with DIN EN 61140; VDE 0140, NEC and other relevant standards.

The drive controller must be grounded with the motor according to relevant regulations.
Non-compliance may result in death or serious injury.

If spring elements are not used when assembling the adapter plate, there must be an extra connection between the motor and drive controller to produce a correct protective conductor connection

Unused open cable ends in the motor terminal box must be insulated.

Use suitable line circuit breakers with the prescribed nominal current between the mains and drive controller.

Mains connections must be hardwired.

3.1 Recommended preliminary fuses / line protection

INVEOR M	Size A 1 x 230 V AC	Size A 3 x 400 V AC	Size B 3 x 400 V AC	Size C 3 x 400 V AC	Size D 3 x 400 V AC	Size D 3 x 400 V AC
Rated motor speed	up to 1.1 kW	up to 1.5 kW	up to 4.0 kW	up to 7.5 kW	up to 15 kW	up to 22 kW
Mains current	9.2 A	3.3 A	7.9 A	14.8 A	28.2 A	39.9 A
Mains current 150% (overload 60 s)	13.8 A	4.95 A	11.85 A	22.2 A	42.3 A	51.87 A
Line circuit breaker - recommendation	C 16	C 10	C 16	C 25	C 50	C 63
	Characteristics C = line circuit breaker tripping between 6 – 10 times In					

⚠ WARNING!

Fire hazard due to short circuit!

Death or severe burns!

The cross-section of the supply line must be designed according to the transfer category and maximum permitted current. The contractor commissioning the device must ensure protection for the power line.

3.2 Installation requirements

3.2.1 Suitable ambient conditions

Conditions	Values
Altitude of the installation location:	up to 3280 ft (1000 m) above sea level / over 3280 ft (1000 m) with reduced performance (1% per 328 ft (100 m)) (max. 6561 ft (2000 m)), see chapter 8.2
Ambient temperature:	- 13 °F (-25 °C) to 122 °F (+50 °C) (different ambient temperatures may be possible in individual cases), see chapter 8.2
Relative air humidity	≤ 96 %, condensation not permitted.
Resistance to vibration and shock:	DIN EN 60068-2-6 severity 2 (vibration from transport) DIN EN 60068-2-27 (vertical impact test) 2…200 Hz for sinusoidal vibrations.
Electromagnetic compatibility:	Immune to interference acc. to DIN EN 61800-3
Cooling:	Surface cooling: sizes A to C: free convection; size C: optionally with integrated fan; size D: with integrated fans.

Tab. 1: Ambient conditions

- Ensure that the housing type (protection class) is suitable for the operating environment:
  - Ensure that the seal between the motor and the adapter plate is inserted correctly.
  - All unused cable screw connections must be sealed.
  - Check that the cover of the drive controller is closed and bolted down tightly.
    - Size A – C (4 x M4 x 1.1 inch (28 mm)) 2 Nm,
    - Size D (4 x M6 x 1.1 inch (28 mm)) 4 Nm.

DAMAGE TO PROPERTY POSSIBLE

Failure to comply with the information may result in damage to the drive controller!

- When attaching a cover with integrated foil keypad, be absolutely sure that the flat ribbon cable is not pinched.

Although the drive controller can, in principle, be painted later on, the user must nevertheless check the material compatibility of the intended paint.

DAMAGE TO PROPERTY POSSIBLE

Failure to comply with this requirement may eventually result in the loss of the protection class (particularly in respect to seals and fibre-optic elements).

The INVEOR is supplied in black RAL 9005 (black) as standard.

Disassembling the circuit boards (even for the purpose of painting the housing sections) renders the warranty void!

Mounting points and sealing surfaces must be kept free of paint for purposes of EMC and grounding!

3.2.2 Suitable installation location for the motor-integrated drive controller

Ensure that the motor with a motor-integrated drive controller is only installed and operated if aligned as shown in the following diagram.

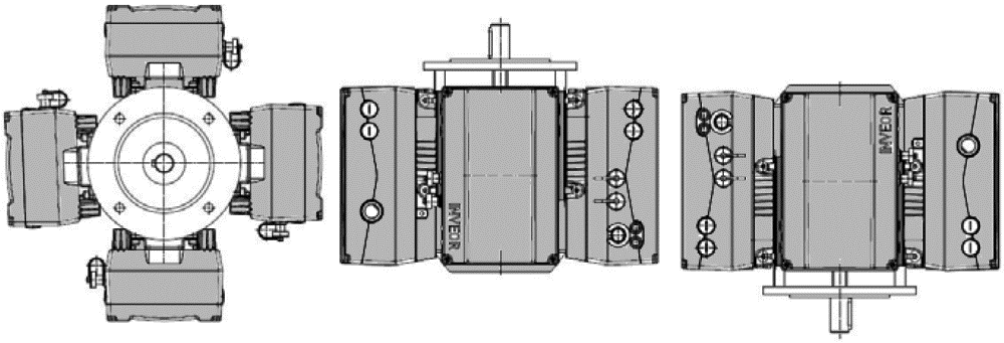

Fig. 9: Motor installation location/permitted alignments

NOTICE

Ensure that no condensate from the motor can enter the drive controller during and after installation.

3.2.3 Basic connection versions

DANGER!

Risk of death due to electrical shock!
Death or serious injury!
De-energise drive controller and secure it against being restarted.

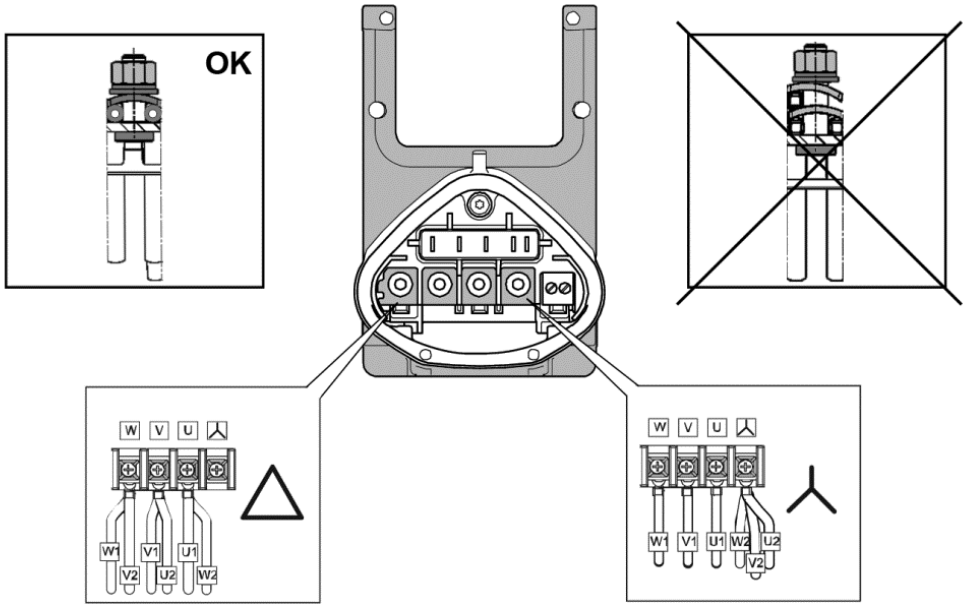

Fig. 10: Star or triangle connection for drive controllers integrated in the motor

Triangle connection variant

DANGER!

Risk of death due to electrical shock!
Death or serious injury!
De-energise drive controller and secure it against being restarted.

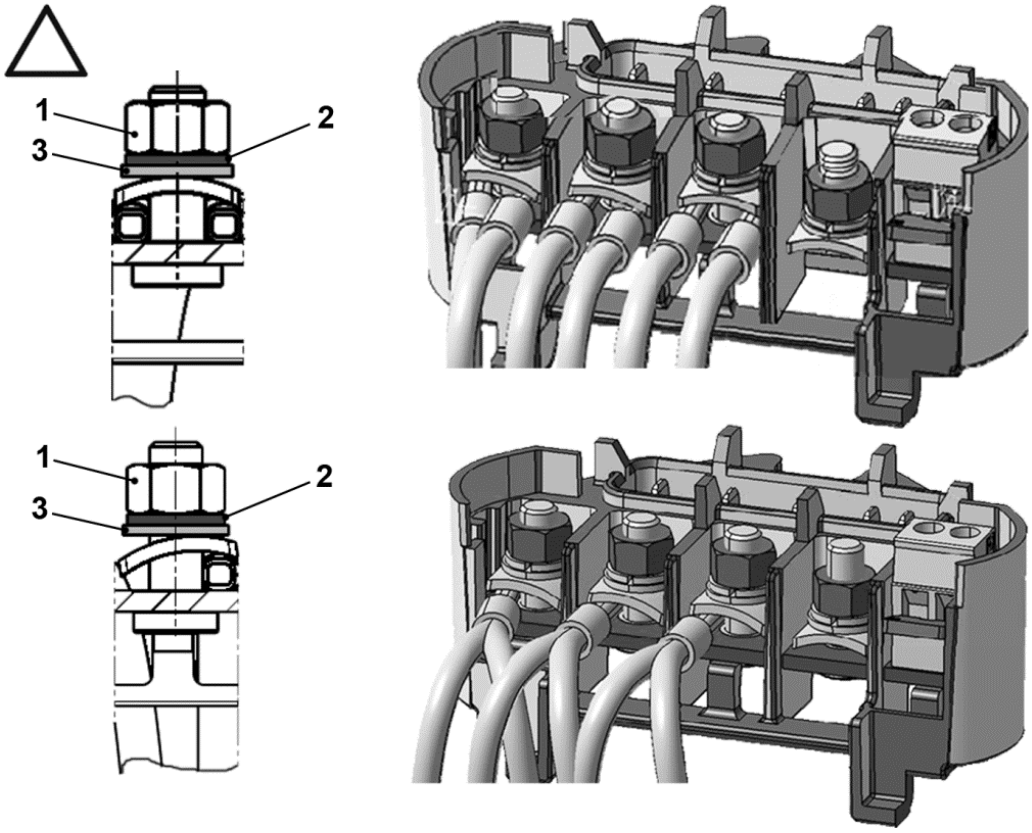

1. Nut M_A = 5 Nm
2. Circlip
3. Plain washer

NOTICE

Regularly check that the nuts (1) are secure [clockwise direction of rotation]!

Star connection variant

DANGER!

Risk of death due to electrical shock!
Death or serious injury!
De-energise drive controller and secure it against being restarted.

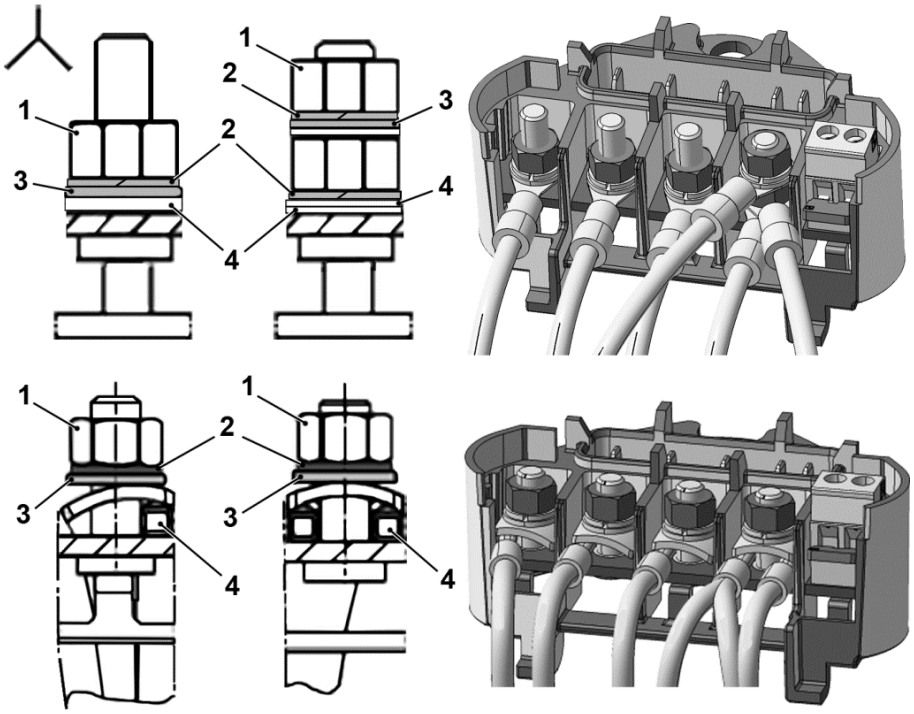

NOTICE

Regularly check that the nuts (1) are secure [clockwise direction of rotation]!

NOTICE

If a thermal resistor (PTC or Klixon) is used, the bridging contact fitted on the connection terminal for the PTC in the delivery state has to be removed.

DAMAGE TO PROPERTY POSSIBLE

Risk of damage to the drive controller.
Correct phase assignment must be observed when connecting the drive controller,
otherwise the motor may be overloaded.

The supplied assembly material can be used to connect core end sleeves and cable shoes. Fig. 5 shows the different connection options.

The cross-section of the supply line must be designed according to the transfer category and maximum permitted current. The contractor commissioning the device must ensure protection for the power line.

3.2.4 Short-circuit and ground-fault protection

The drive controller has internal short-circuit and ground-fault protection.

3.2.5 Wiring instructions

The control connections of the application card are located inside the drive controller.
The configuration may vary depending on the version.

Control terminals (sizes A – D)

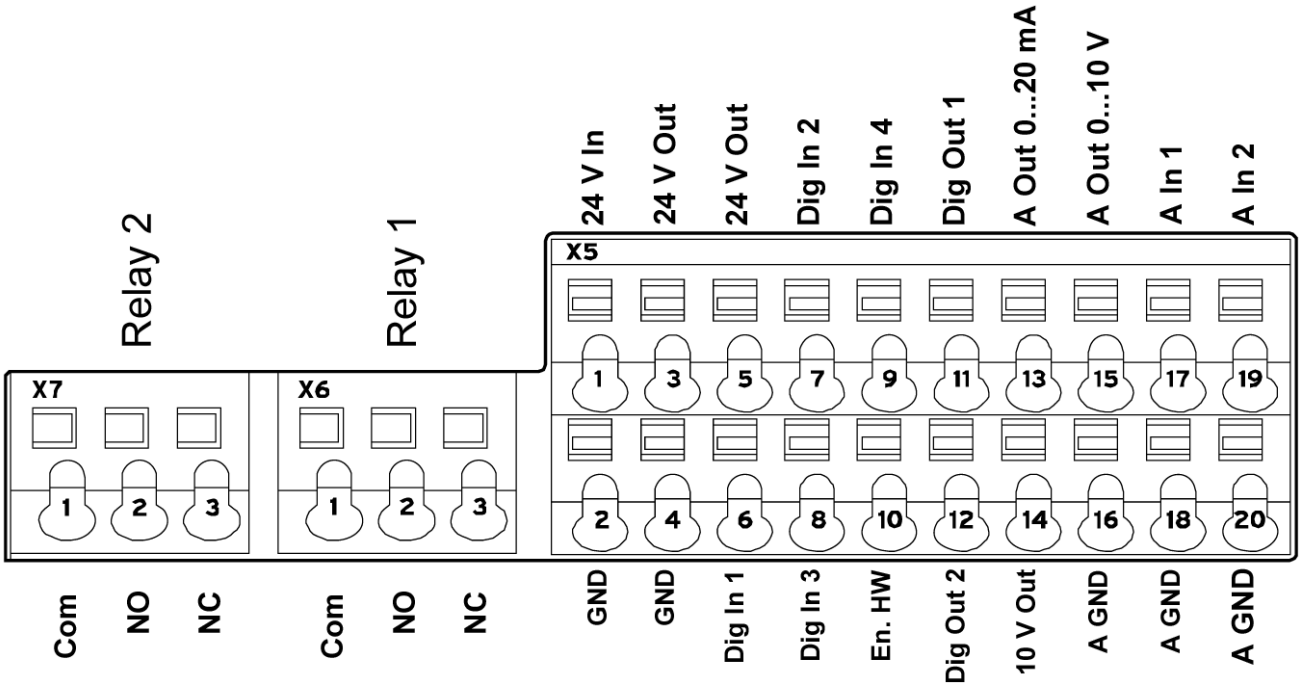

Sizes A - D		
X5 – X7	Terminals:	Plug terminal clamp with activation button (slot screwdriver, max. width 0.1 inch (2.5 mm))
	Connection cross-section:	AWG 20 to AWG 14, (0.5 to 1.5 mm^2), single-wire
	Connection cross-section:	AWG 18 to AWG 14, (0.75 to 1.5 mm^2), fine-wired
	Connection cross-section:	AWG 20 to AWG 17 (0.5 to 1.0 mm^2), fine-wired, (core end sleeves with and without plastic collar)
	Length of stripped insulation:	9 to 0.39 inch (9 to 10 mm)

Power connections (sizes A – C)

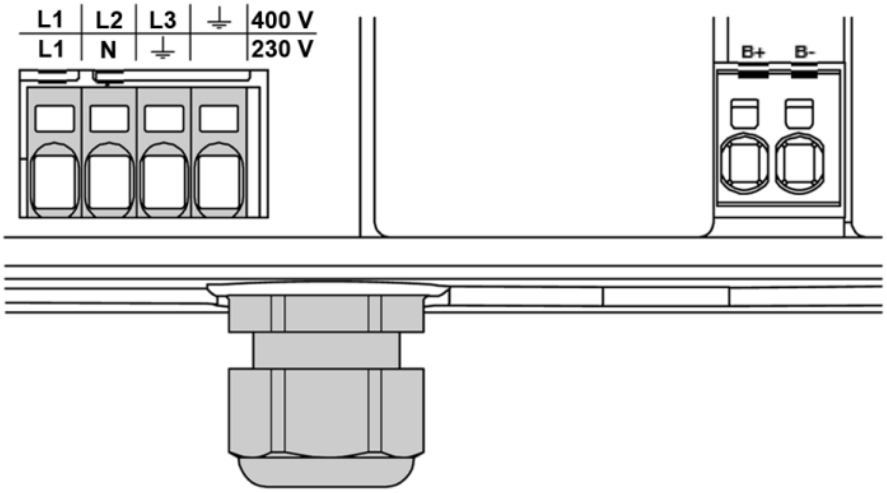

Sizes A - C		
X1 mains + B - brake resistor	The terminals for the mains cable are located inside the drive controller. The INVEOR also has the option of being equipped with terminals for connecting a brake resistor. The configuration may vary depending on the version.	
	Core end sleeves with plastic collars and lugs are recommended.	
	Terminals:	Spring force connection (slot screwdriver, max. width 0.1 inch (2.5 mm))
	Conductor cross-section, rigid	min. AWG 24 (0.2 mm^2) max. AWG 8 (10 mm^2)
	Conductor cross-section, flexible	min. AWG 24 (0.2 mm^2) max. AWG 10 (6 mm^2)
	Conductor cross-section, flexible with core end sleeve without plastic sleeve	min. AWG 23 (0.25 mm^2) max. AWG 10 (6 mm^2)
	Conductor cross-section, flexible with core end sleeve with plastic sleeve	min. AWG 23 (0.25 mm^2) max.AWG 11 (4 mm^2)
	2 conductors of the same cross-section, flexible with TWIN-AEH with plastic sleeve	min. AWG 23 (0.25 mm^2) max. AWG 16 (1.5 mm^2)
	AWG/kcmil conductor cross-section according to UL/CUL	min. 24 max. 8
	Length of stripped insulation:	0.59 inch (15 mm)
	Mounting temperature:	23 °F (-5°C) to + 212 °F (100°C)

Power connections (size D)

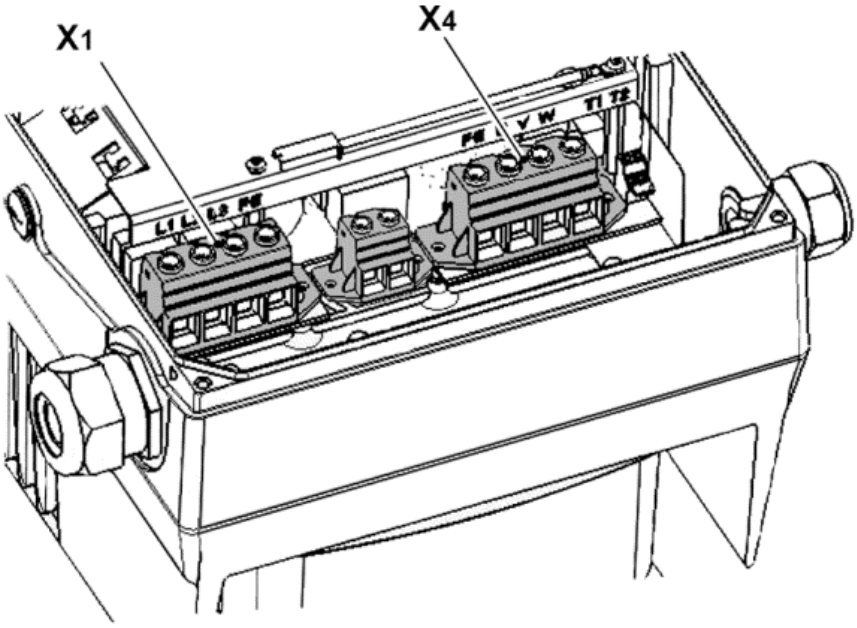

Size D		
X1 mains / X4 motor + B - brake resistor	The terminals for the mains cable are located inside the drive controller. The INVEOR also has the option of being equipped with terminals for connecting a brake resistor. The configuration may vary depending on the version.	
	Core end sleeves with plastic collars and lugs are recommended.	
	Torque min. 2.5 Nm / max. 4.5 Nm	
	Conductor cross-section:	rigid min. AWG 20 (0.5 mm^2) / rigid max. AWG 2 (35 mm^2)
	Conductor cross-section, flexible:	min. AWG 20 (0.5 mm^2) / max. AWG 4 (25 mm^2)
	Conductor cross-section, flexible with core end sleeve without plastic collar	min. AWG 17 (1 mm^2) max. AWG 4 (25 mm^2)
	Conductor cross-section, flexible with core end sleeves with plastic sleeve	min. AWG 16 (1.5 mm^2) max. AWG 4 (25 mm^2)
	AWG / kcmil conductor cross-section according to UL/CUL	min 20 max. 2
	2 conductors of the same cross-section, rigid	min. AWG 20 (0.5 mm^2) max. AWG 10 (6 mm^2)
	2 conductors of the same cross-section, flexible	min. AWG 20 (0.5 mm^2) max. AWG 10 (6 mm^2)
	2 conductors of the same cross-section, flexible with AEH without plastic sleeve	min. AWG 20 (0.5 mm^2) max. AWG 4 (25 mm^2)
	2 conductors of the same cross-section, flexible with TWIN-AEH with plastic sleeve	min. AWG 20 (0.5 mm^2) max. AWG 10 (6 mm^2)
	AWG according to UL/CUL	min. 20 max. 2

3.2.6 Preventing electromagnetic interferences

To ensure immunity to interference, be sure that control lines run separately from grid and motor cables. Where possible use shielded lines for analogue control circuits. At the line end, the shielding should be fitted with great care. The use of EMC cable screw connections is recommended for this purpose. These are not part of the scope of delivery.

Ensure that no parasitic currents (compensating currents etc.) can flow via an analogue control cable's shielding.

Route the control lines as far away as possible from the power lines. Under certain circumstances, separate power ducts should be used.

If lines do cross, an angle of 90° should be observed as far as possible.

Upstream switch elements, such as protector switches and brake coils or circuit elements that are operated via the outputs of the drive controller have to be interference-suppressed.

RC circuits are suitable as AC voltage protector switches, while free-wheeling diodes or varistors are usually used as DC voltage protector switches. These interference suppression devices are attached directly to the protector switch coils.

NOTICE

Where possible, the power for a mechanical brake should be supplied in a separate cable

Power connections between the drive controller and motor should always be shielded or reinforced, and the shielding must have large-scale grounding at both ends! The use of EMC cable screw connections is recommended. These are not part of the scope of delivery.

Wiring suitable for EMC must be ensured.

3.3 Installing the drive controller integrated in the motor

3.3.1 Mechanical installation

Mechanical installation of sizes A - C

DANGER!

Risk of death due to electrical shock!

Death or serious injury!

De-energise drive controller and secure it against being restarted.

Proceed as follows to mechanically install the drive controller:

1. Open the standard motor connection box.
2. Disconnect the wires from the connection terminals. Memorise or write down the connection sequence.
3. Remove the motor terminal block if necessary.
4. Remove the connection housing's retaining bolts and take the housing off. Be careful not to damage the seal.

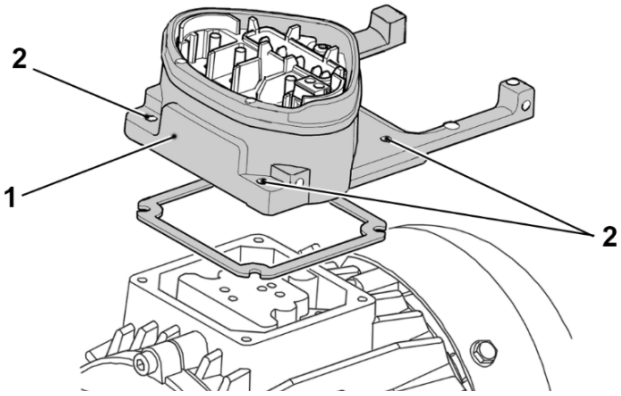

NOTICE

The standard adapter plate is a plate the underside of which is not reworked; i.e. no holes have been produced yet. You can order individually modified adapter plates from KOSTAL for selected motors.

5. Modify the adapter plate (1) by producing the necessary holes (2) for mounting on the motor.

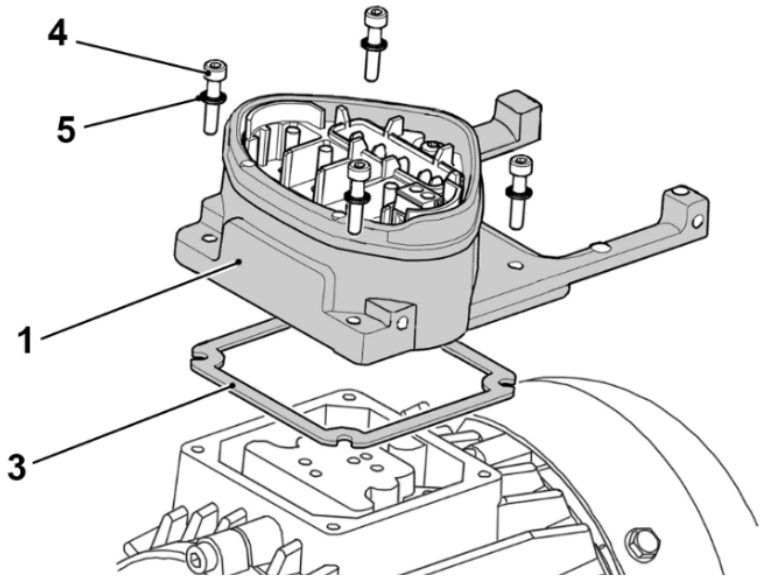

NOTICE

The commissioning technician is responsible for protection class compliance when sealing the adapter plate on the motor.

When installing the adapter plate, he or she should ensure that water is prevented from entering the system via the screw fastenings.

Appropriate measures should be taken to seal the threads of the screw connections.

If you have any questions, please ask your KOSTAL contact.

6. Fit the seal (3).
7. Lead the motor connection line past the connection terminal and through the adapter plate (1) and screw down to the motor with the four retaining bolts (4) and the four spring elements (torque: 2.0 Nm).

DANGER!

Risk of death due to electrical shock! Death or serious injury!

The drive controller must be grounded with the motor according to relevant regulations. Non-compliance may result in death or serious injury.

If spring elements (5) are not used when assembling the adapter plate, there must be an extra connection between the motor and drive controller to produce a correct protective conductor connection.

NOTICE

When mounting the adapter plates, ensure that all four screws, including the spring elements, are tightened to the necessary torque (2 Nm)!

All contact points must be free of dirt/paint because otherwise a correct protective conductor connection is not ensured!

8. Attach the motor wires in the correct circuit, see also Fig. 11 (torque: 5.0 Nm).
   We would recommend using insulated M5 annular cable sockets with a connection cross-section of 4 to 6 mm^2.

NOTICE

When installing the motor wires, ensure that all bolts on the terminal board are fitted with the nuts provided even if the star point is not connected!

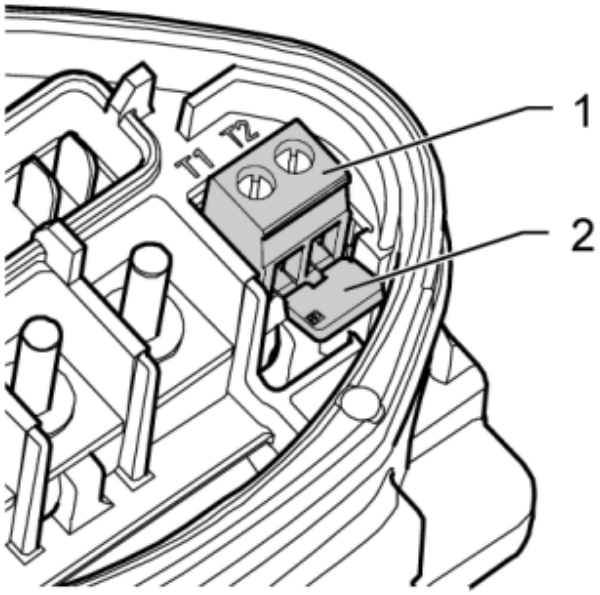

9. If present, wire the connection cables of the motor PTC/Klixon to the T1 and T2 terminals (1) (torque: 0.6 Nm).

NOTICE

During assembly, ensure that the connection cable is not crushed!

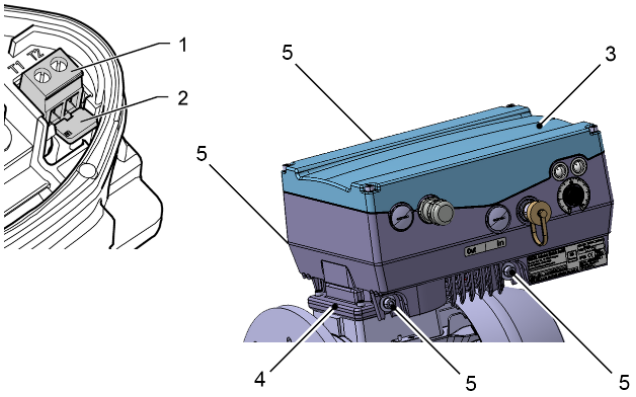

NOTICE

If the motor is fitted with a temperature sensor, this is connected to the T1 and T2 terminals (1).

Remove the bridging contact (2) inserted for delivery for this purpose.

When the bridge is in place, the temperature of the motor is not monitored!

Only motor PTCs corresponding to DIN 44081/44082 may be connected!

DANGER!

Risk of death due to electrical shock!

Death or serious injury!

The drive controller must be grounded with the motor according to relevant regulations. Non-compliance may result in death or serious injury.

10. Plug the drive controller (3) onto the adapter plate (4) and secure uniformly using the four lateral bolts (5) (sizes A – C) (torque: 4.0 Nm).

Mechanical installation of size D

Proceed as follows to mechanically install the drive controller:

1. Open the standard motor connection box.
2. Remove the connection housing's retaining bolts and lift off the housing.

DAMAGE TO PROPERTY POSSIBLE

Be careful not to damage the seal.

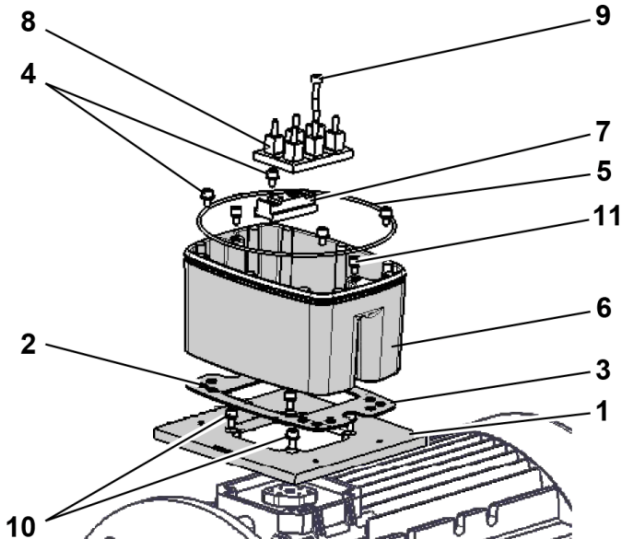

Fig. 11 Assembly sequence:
Connection box – adapter plate, size D

Key	
1	Adapter plate option (variant)
2	Holes depending on motor
3	Seal
4	Retaining bolts with spring elements
5	O-ring seal
6	Cup for INVEOR/adapter plate
7	Junction plate heightening option
8	Original junction plate (not included)
9	Extended screw option (for It. 7)
10	Retaining bolts with spring elements option
11	INVEOR/cup retaining bolts

NOTICE

The standard adapter plate is a plate the underside of which is not reworked; i.e. no holes have been produced yet.

You can order individually modified adapter plates from KOSTAL for selected motors.

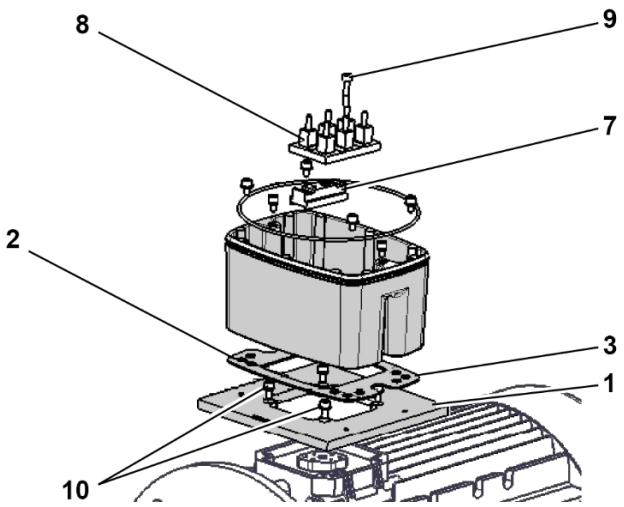

3. Modify the adapter plate (1) by producing the necessary holes (2) for mounting on the motor.

NOTICE

Correct sealing between the adapter plate and motor is of vital importance to compliance with the protection class.

When installing the adapter plate, he or she should ensure that water is prevented from entering the system via the screw fastenings.

Appropriate measures should be taken to seal the threads of the screw connections.

The commissioning technician alone is responsible for this.

If you have any questions, please ask your KOSTAL contact.

4. Fit the seal (3).
5. Screw the adapter plate (1) on to the motor with the four retaining bolts (10) and four spring elements (torques: M4 to 2.4 Nm, M5 to 5.0 Nm, M6 to 8.5 Nm).

NOTICE

When mounting the adapter plate (1), ensure that all four retaining bolts (10), including the spring elements, are tightened to the necessary torque!

All contact points must be free of dirt/paint because otherwise a correct protective conductor connection is not ensured!

6. Secure the original junction plate (8), if necessary using the optional junction plate heightening part (7) and the optional extended screws (9), on the motor.
7. Connect the four lines (PE, U, V, W) of the corresponding cross-section (depending on rating of INVEOR used) to the original junction plate (8).

NOTICE

The connecting lines (approx. 11.81 inch (30 cm)) needed to wire the motor junction plate/INVEOR are not included in the scope of supply!

NOTICE

Please ensure that the seal (3) sits perfectly!

8. Screw the cup (6) to the adapter plate (1) with four retaining bolts (4) incl. the spring elements (torque: 8.5 Nm).

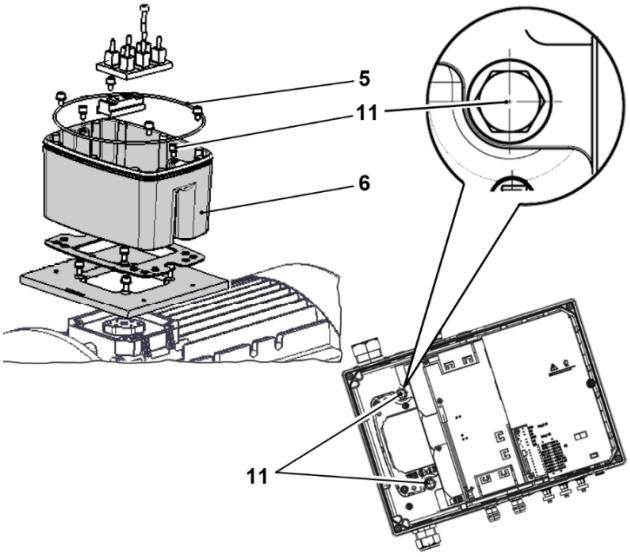

9. Guide the four lines (PE, U, V, W) through the cup (6) of the INVEOR.

NOTICE

Please ensure that the O-ring seal (5) sits perfectly!

10. Carefully attach the drive controller to the cup (6) and secure uniformly with two M8 screws (11) (torque: max. 25.0 Nm).

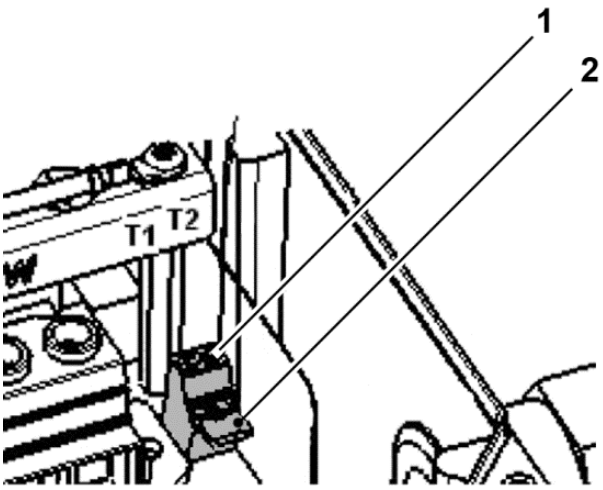

NOTICE

During assembly, ensure that the connection cable is not crushed!

11. If present, wire the connection cable of the motor PTC/Klixon to the T1 and T2 terminals (1) (torque: 0.6 Nm).

NOTICE

If the motor is fitted with a temperature sensor, this is connected to the T1 and T2 terminals (1).

Remove the bridging contact (2) inserted for delivery for this purpose.

When the bridge is in place, the temperature of the motor is not monitored!

3.3.2 Power connection

Power connection for sizes A - C

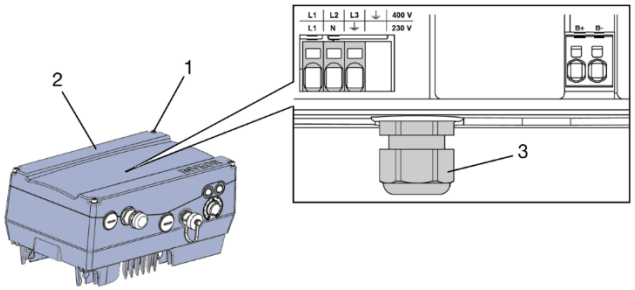

NOTICE

When connecting a brake resistor to an optional brake chopper, cables with shielding and double insulation must be used!

DANGER!

Risk of death due to electrical shock!

Death or serious injury!

De-energise drive controller and secure it against being restarted.

1. Unscrew the four screws (1) from the drive controller's housing cover (2) and then take it off.
2. Guide the mains connection cable through the cable glands (3).

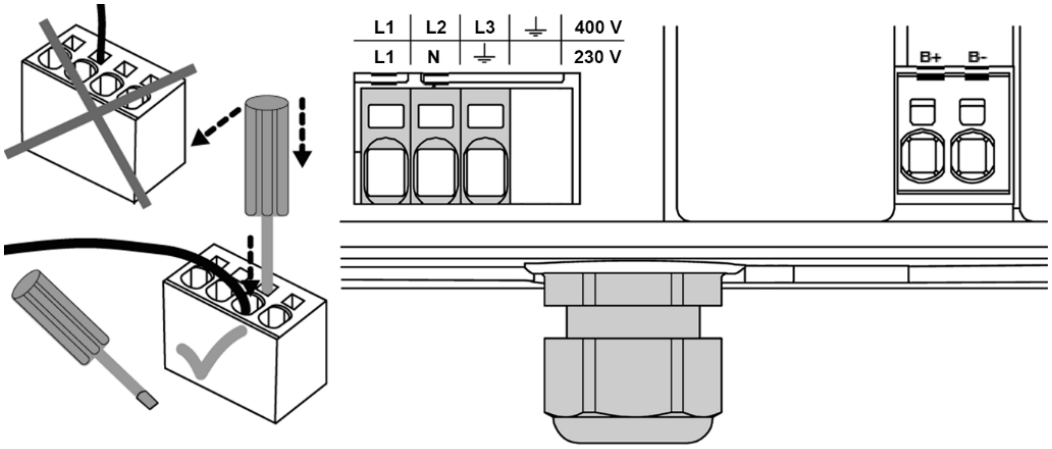

3. Connect the cables with the terminals as follows:

230 V connection		
L1	N	PE

400 V connection			
L1	L2	L3	PE

Terminal no.	Designation	Assignment
1	L1	Mains phase 1
2	L2	Mains phase 2
3	L3	Mains phase 3
4	PE	Protective conductor

Tab. 2: 3 x 400 VAC terminal assignment X1

Terminal no.	Designation	Assignment
1	L1	DC mains (+)
2	L2	Not assigned
3	L3	DC mains (-)
4	PE	Protective conductor

Tab. 3: DC feed 565 V terminal assignment X1

Terminal no.	Designation	Assignment
1	L1	Mains phase 1
2	N	Neutral wire
3	PE	Protective conductor

Tab. 4: 1 x 230 VAC terminal assignment X1

Terminal no.	Designation	Assignment
1	L1	DC mains (+)
2	N	DC mains (-)
3	PE	Protective conductor

Tab. 5: DC feed 325 V terminal assignment X1

Power connection for size D

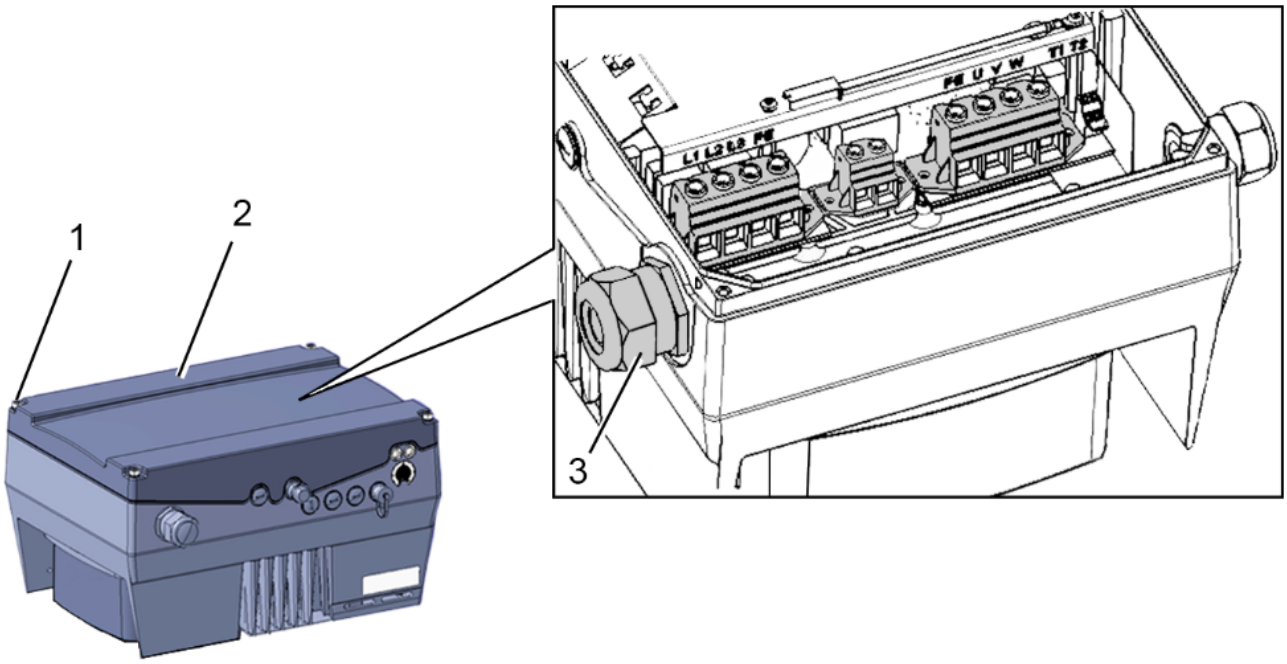

Fig. 12: Power connection for size D

NOTICE

When connecting a brake resistor to an optional braking module, cables with shielding and double insulation must be used!

1. Unscrew the four screws (1) from the drive controller's housing cover (2) and then take it off.
2. Guide the mains connection cable through the cable glands (3).

DANGER!

Risk of death due to electrical shock!

Death or serious injury!

De-energise drive controller and secure it against being restarted.

NOTICE

The cable screw connection provides strain relief, and the PE connection cable must be connected in a leading fashion (considerably longer)

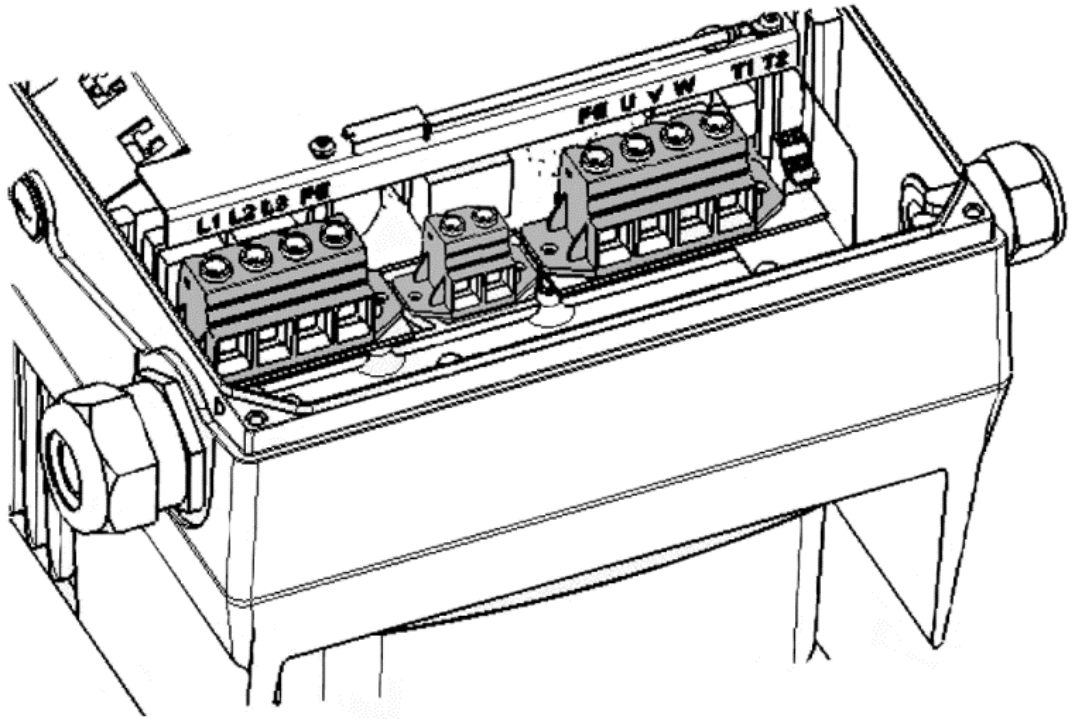

3. Connect the cables with the terminals as follows:

400 V connection			
L1	L2	L3	PE

Terminal no.	Designation	Assignment
1	L1	Mains phase 1
2	L2	Mains phase 2
3	L3	Mains phase 3
4	PE	Protective conductor

Tab. 6: 3 x 400 VAC terminal assignment X1

The protective conductor must be connected to the "PE" contact.

Terminal no.	Designation	Assignment
1	L1	DC mains (+)
2	L2	Not assigned
3	L3	DC mains (-)
4	PE	Protective conductor

Tab. 7: DC feed 565 V terminal assignment X1

Terminal no.	Designation	Assignment
1	PE	Protective conductor
2	U	Motor phase 1
3	V	Motor phase 2
4	W	Motor phase 3

Tab. 8: Motor connection assignment X4

3.3.3 Connections for brake resistor

Terminal no.	Designation	Assignment
1	B +	Anschluss Bremswiderstand (+)
2	B -	Anschluss Bremswiderstand (-)

Tab. 9 Optional terminal assignment for brake chopper

3.3.4 Control connections X5, X6, X7

Control connections of the standard application board

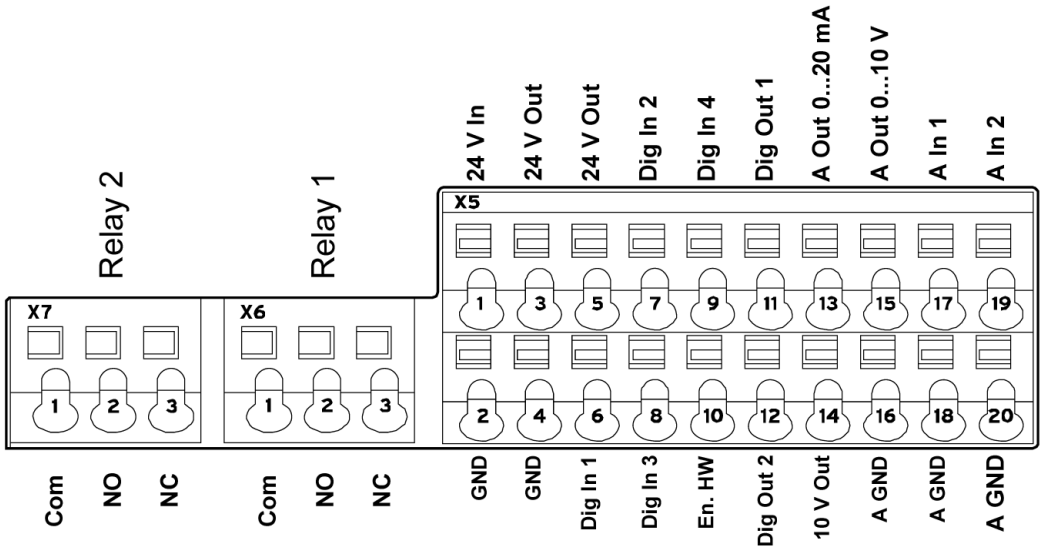

Fig. 13: Control connections of the standard application board

NOTICE

Danger of external signals being coupled in.
Use only shielded control line!

1. Guide the required control cable into the housing through the cable screw connections.
2. Connect the control cables according to the figure and/or table. Use shielded control cables.
3. Place the cover on the housing of the drive controller and bolt it tight to the following torque.

Size.	Torque	
A - C	2 Nm	(4 x M4 x 1.1 inch (28 mm))
D	4 Nm	(4 x M6 x 1.1 inch (28 mm))

Continues on next page

Continuation

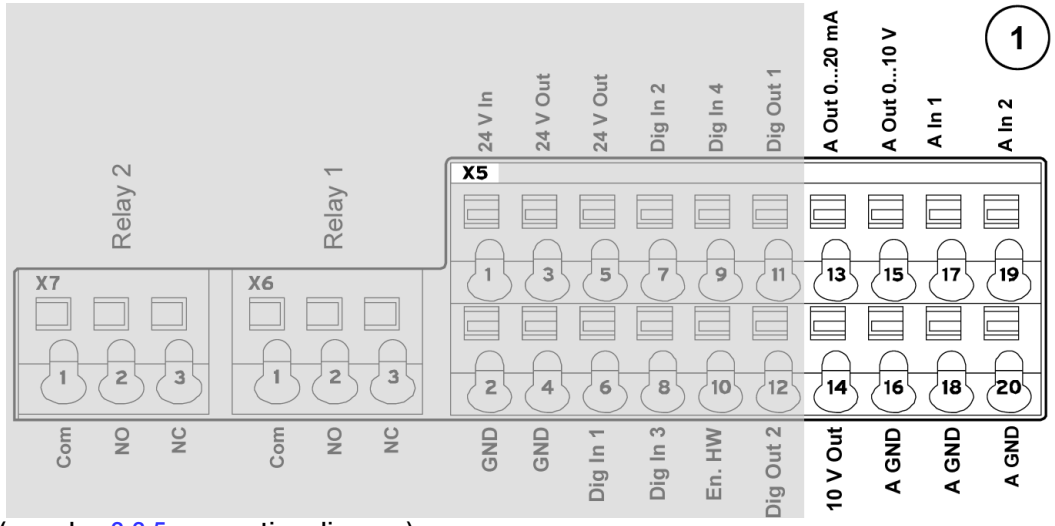

(see also 3.3.5 connection diagram)

Terminal no.	Designation	Assignment
13	A. Out 0 … 20 mA	Actual frequency value (parameter 4.100)
14	10 V Out	For ext. voltage divider
15	A. Out 0 … 10 V	Actual frequency value (parameter 4.100)
16	A GND (ground 10 V)	Ground
17	A. In 1	PID actual value (parameter 3.060)
18	A GND (Ground 10 V)	Ground
19	A. In 2	Free (not assigned)
20	A GND (ground 10 V)	Ground

Tab. 10: Terminal assignment X5 of the standard application board

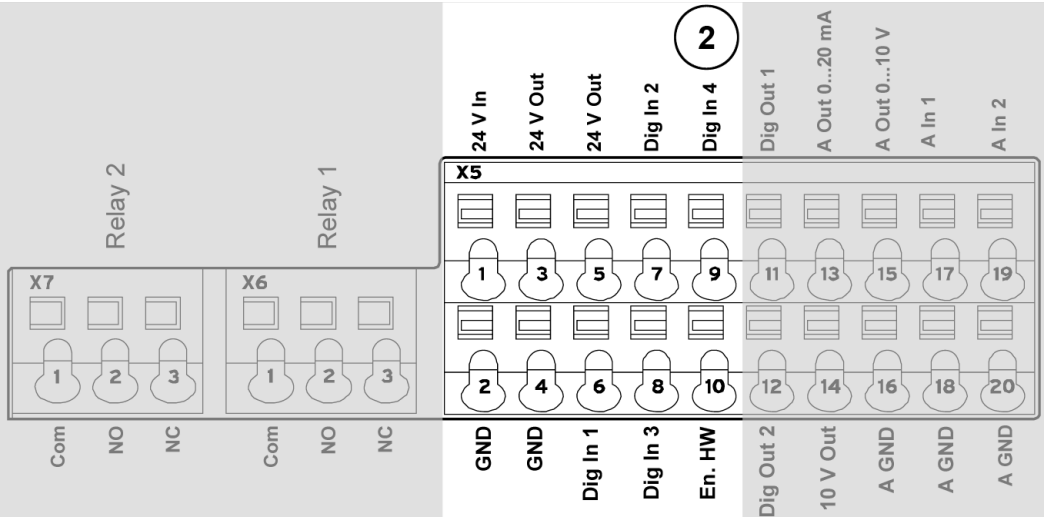

(see also 3.3.5 connection diagram)

Terminal no.	Designation	Assignment
1	24 V In	Ext. power supply
2	GND (ground)	Ground
3	24 V Out	Int. power supply
4	GND (ground)	Ground
5	24 V Out	Int. power supply
6	Dig. In 1	Target value enable (parameter 1.131)
7	Dig. In 2	Free (not assigned)
8	Dig. In 3	Free (not assigned)
9	Dig. In 4	Error reset (parameter 1.180)
10	En HW (enable)	Enable hardware

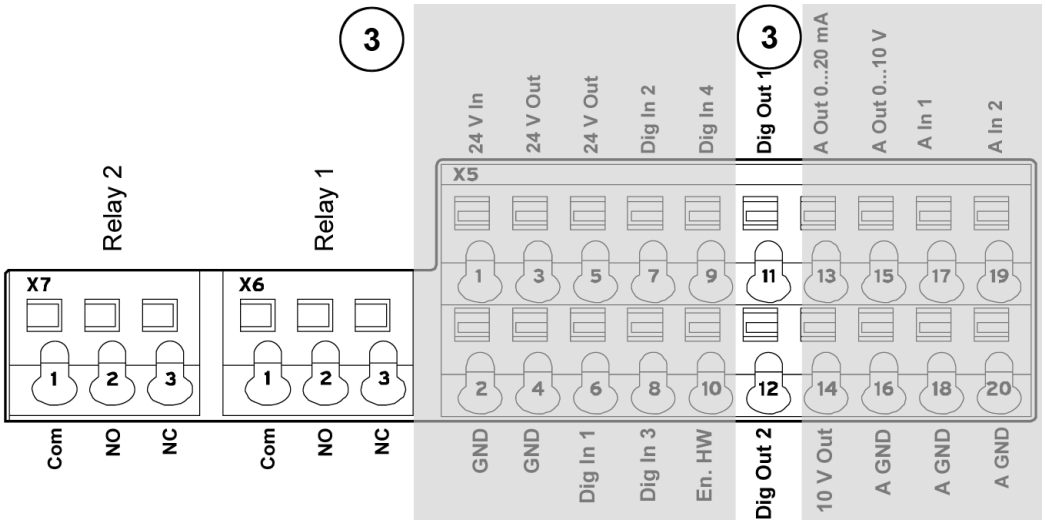

(see also 3.3.5 connection diagram)

Terminal no.	Designation	Assignment
11	Dig. Out 1	Fault message (parameter 4.150)
12	Dig. Out 2	Free (not assigned)

X6 relay 1

Terminal no.	Designation	Assignment
2	COM	Centre contact relay 1
2	NO	Normally open relay 1
3	NC	Normally closed relay 1

Tab. 11: Terminal assignment X6 (relay 1)

NOTICE

In the factory setting, relay 1 is programmed as “relay error” (parameter 4.190)

X7 relay

Terminal no.	Designation	Assignment
1	COM	Centre contact relay 2
2	NO	Normally open relay 2
3	NC	Normally closed relay 2

Tab. 12: Terminal assignment X7 (relay 2)

NOTICE

In the factory setting, “no function” is assigned to relay 2 (parameter 4.210)

Control connections of the basic application board

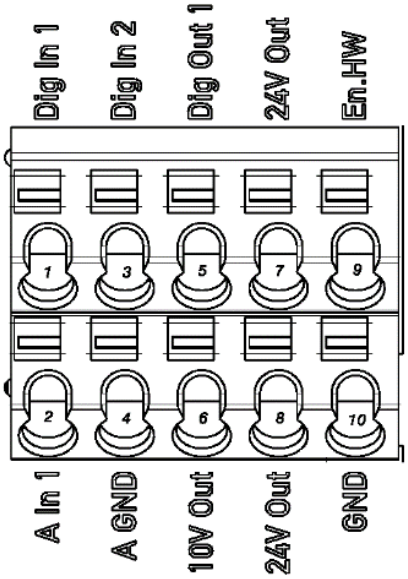

Fig. 14: Control connections of the basic application board

Terminal no.	Designation	Assignment
1	Dig. In 1	Target value enable (parameter 1.131)
2	A. In 1	Free (not assigned)
3	Dig. In 2	Free (not assigned)
4	A GND (ground 10 V)	Ground
5	Dig. Out	Fault message (parameter 4.150)
6	10 V Out	For ext. voltage divider
7	24 V Out	Int. power supply
8	24 V Out	Int. power supply
9	En HW (enable)	Enable hardware
10	GND (ground)	Ground

3.3.5 Connection diagram

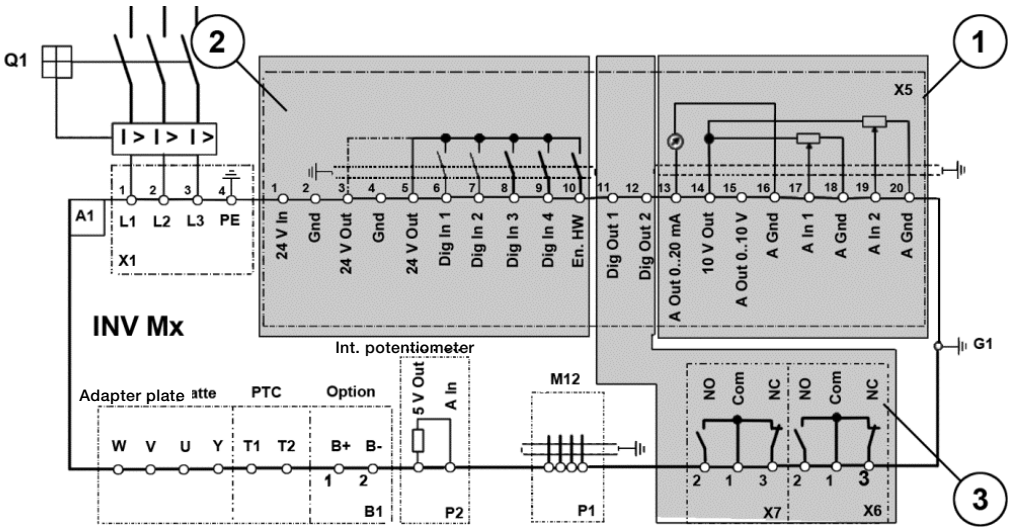

Fig. 15: Control connections

Characters	Explanation
A1	Drive controller type: INV Mx IV01 (3 x 400 VAC)
B1	Connection for external brake resistor (option)
G1	M6 grounding screw (connection for residual currents > 3.5 mA)
P1	RS485 programming interface (M12 plug)
P2	Internal potentiometer
Q1	Motor protection switch or load break switch (optional)
X1	Mains terminals
X5 – X7	Digital/analogue inputs and outputs

The drive controller is ready once a 3 x 400 VAC mains supply has been activated (on terminals L1 to L3) or a 565 V DC mains supply has been activated (on terminals L1 and L3).

The drive controller can also be started up by connecting an external 24 V voltage.

3.4 Installing the wall-mounted drive controller

3.4.1 Suitable installation location for wall mounting

Ensure that the installation location for an INVEOR wall mounting meets the following conditions:

- The drive controller has to be mounted on an even and fixed surface.
- The drive controller may only be mounted on non-inflammable bases.
- There must be clearance of 7.87 inch (200 mm) around the drive controller to ensure free convection.

The following figure shows the assembly dimensions and the free spaces required for installing the drive controller.

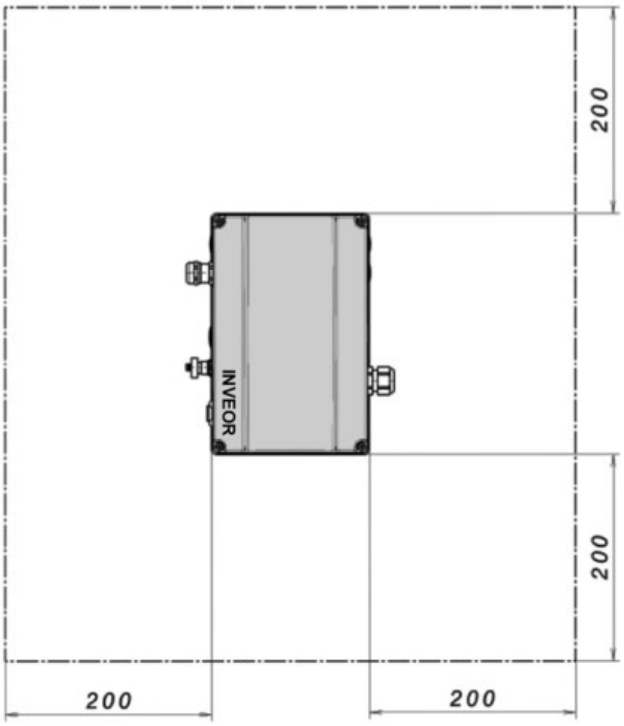

Fig. 16: Minimum clearances

INVEOR size	Max. length shielded	Max. length unshielded
A	16 ft (5 m)	16 ft (5 m)
B	16 ft (5 m)	16 ft (5 m)
C	65 ft (20 m)	328 ft (100 m
D	65 ft (20 m)	328 ft (100 m

(For exceptions, see chapter 1.2 EMC Limit Classes)

NOTICE

Only use shielded cables with the appropriate cross-section.

Establish a PE connection beneath the terminal board of the wall mounting!

3.4.2 Mechanical installation sizes A - C

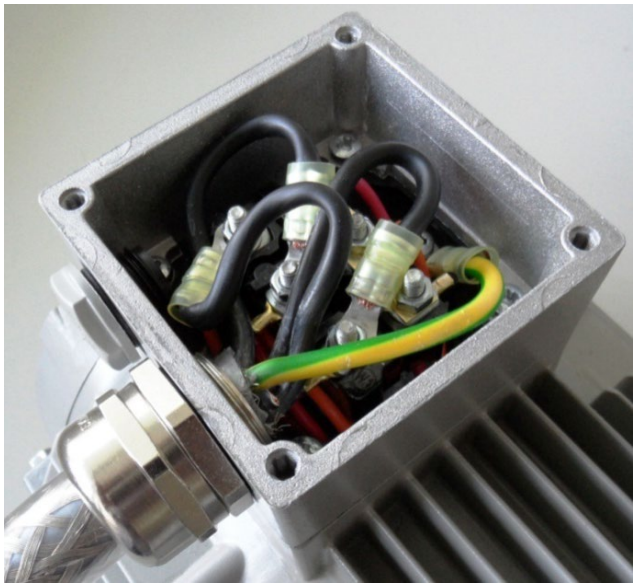

Fig. 17: Wiring on the motor connection box

1. Open the motor connection box.

NOTICE

Depending on the required motor voltage, the star or triangle connection must be made in the motor connection box!

2. Use suitable EMC screw connections to attach the shielded motor cables to the motor connection boxes! Ensure that the shielding contact is in order (large surface)!
3. Connect the prescribed PE connection in the motor connection box!
4. Close the motor connection box.

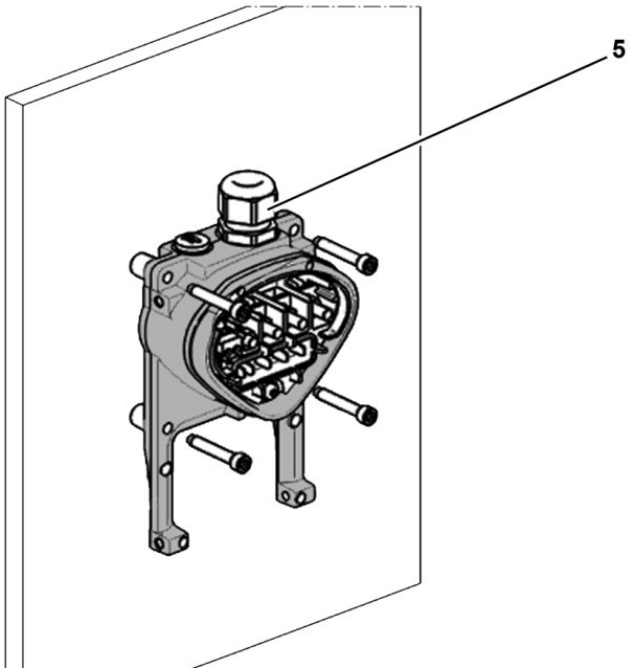

NOTICE

The drive controller may not be installed without an adapter plate!

- Find a position that meets the required ambient conditions described in the "Installation requirements" section.
- To achieve optimum self-convection of the drive controller, ensure that the (EMC) screw connection (5) is facing upwards during installation.
- If there is no additional ventilation for the INVEOR (optional for size C), only vertical installation is permitted.

Continues on next page

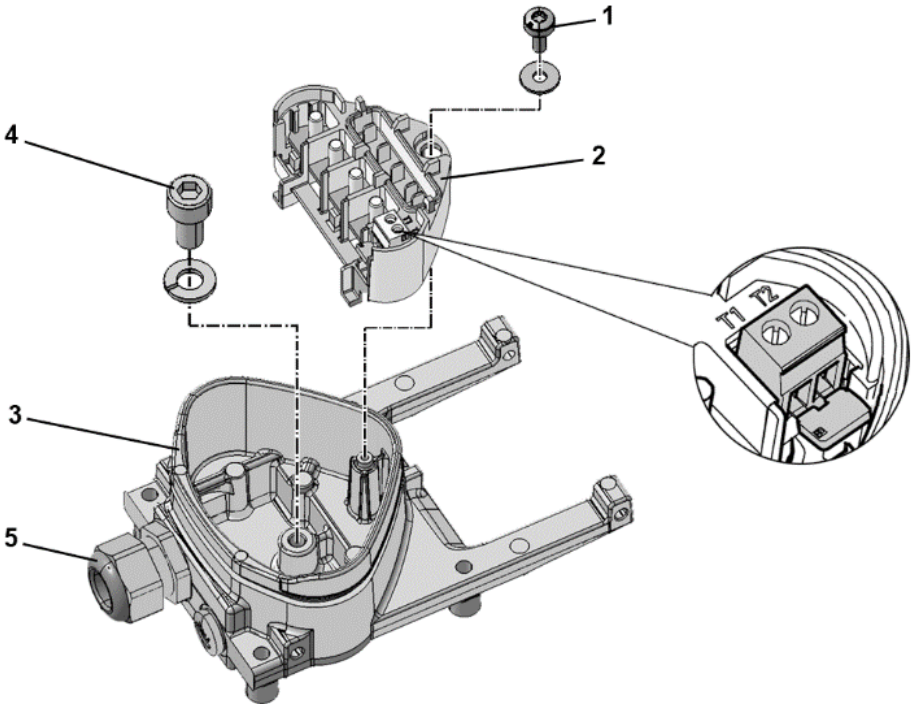

Fig. 18: Wiring

1. Release the screw (1) to remove the contact plate (2) from the adapter plate (3). The (M6 x 0.47 inch (12 mm)) PE connection (4) is underneath the contact plate.
2. Guide the connection cable from the motor to the adapter plate (3) through the integrated EMC screw connection (5).
3. This PE connection (torque: 4.0 Nm) must be made to the same ground potential as the motor. The cross-section of the equipotential bonding line must correspond to at least the cross-section of the power cable.

⚠ DANGER!

Risk of death due to electrical shock!
Death or serious injury!
The drive controller must be grounded with the motor according to relevant regulations.
The PE connection between the motor and drive controller should be established using the hexagon socket screw (4) and the spring ring included in the scope of supply for the adapter plate (3).

4. Refit the contact plate (2) in the adapter plate (3).
5. Fasten the contact plate (2) using the screw (1) (torque: 1.2 Nm).

! NOTICE

After fastening the contact plate (2), ensure that it is mounted floating.

Continues on next page

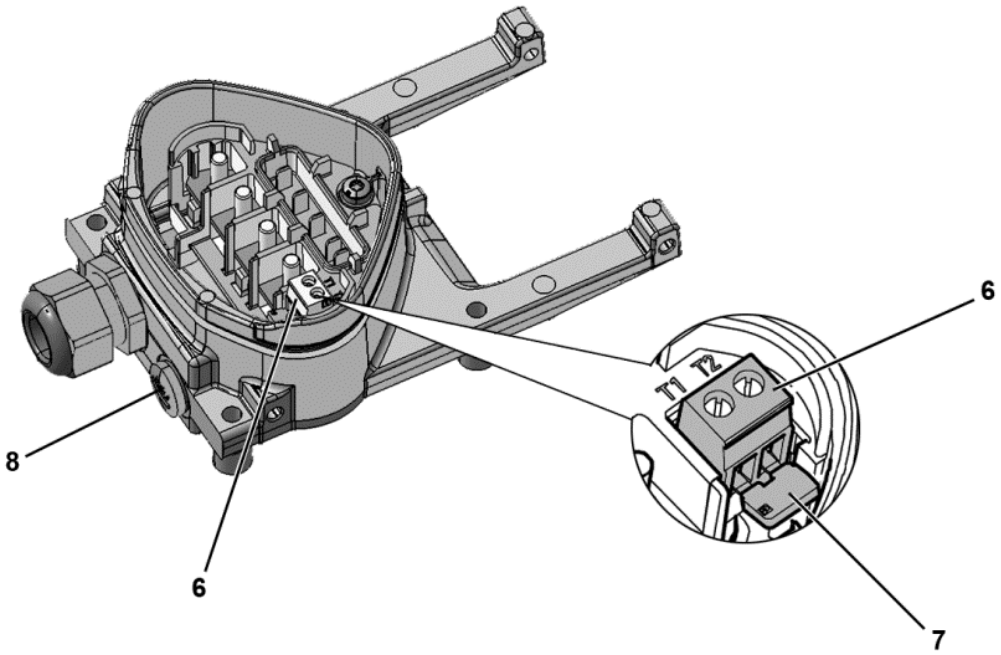

6. Wire the motor cable to contacts U, V, W (and the star point in some cases) in the connection terminal, as described in the "Basic connection versions" chapter.
   Use cable shoes (M5) to do this.
7. Before connecting an existing motor PTC to the T1 and T2 terminals (6), remove the pre-assembled short-circuit bridge (7).

⚠ DANGER!

Risk of death due to electrical shock!
Death or serious injury!
The motor PTC is energised once the INVEOR is connected,
therefore it must be connected using a separate insulated motor lead.
Only motor PTCs corresponding to DIN 44081/44082 may be connected!

Replace the dummy screw (8) with a suitable standard screw connection and guide both ends to T1 and T2 (6).

Continues on next page

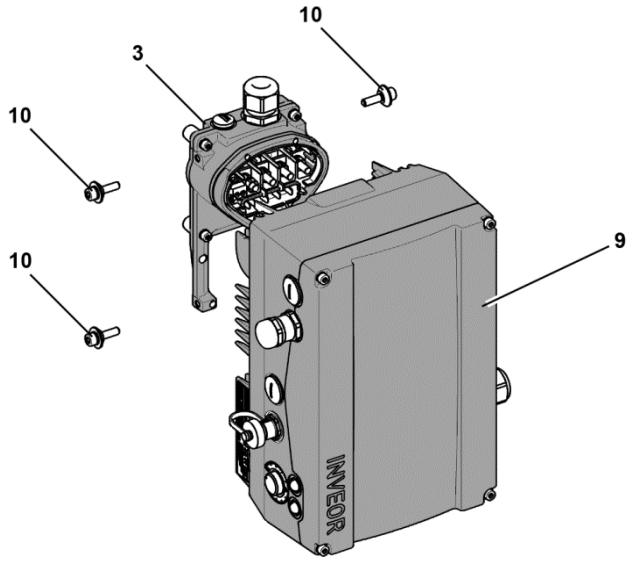

Fig. 19: Attaching the drive controller

8. Position the drive controller (9) on the adapter plate (3) so that the collar of the adapter dips into the opening on the floor of the cooling element.
9. Fasten the drive controller (9) to the adapter plate (3) with the help of the screws (10) provided (torque: 4.0 Nm).

3.4.3 Mechanical installation of size D

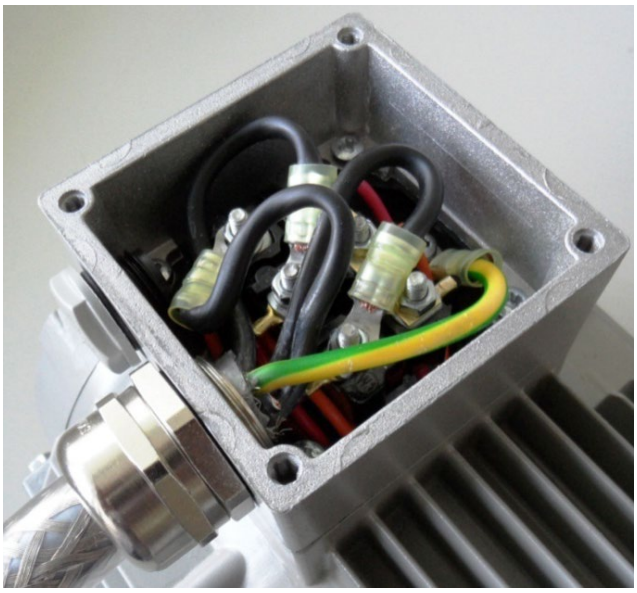

Fig. 20: Wiring on the motor connection box

1. Open the motor connection box.

NOTICE

Depending on the required motor voltage, the star or triangle connection must be made in the motor connection box!

2. Use suitable EMC screw connections to attach the shielded motor cables to the motor connection boxes! Ensure that the shielding contact is in order (large surface)!
3. Connect the prescribed PE connection in the motor connection box!
4. Close the motor connection box.

Continues on next page

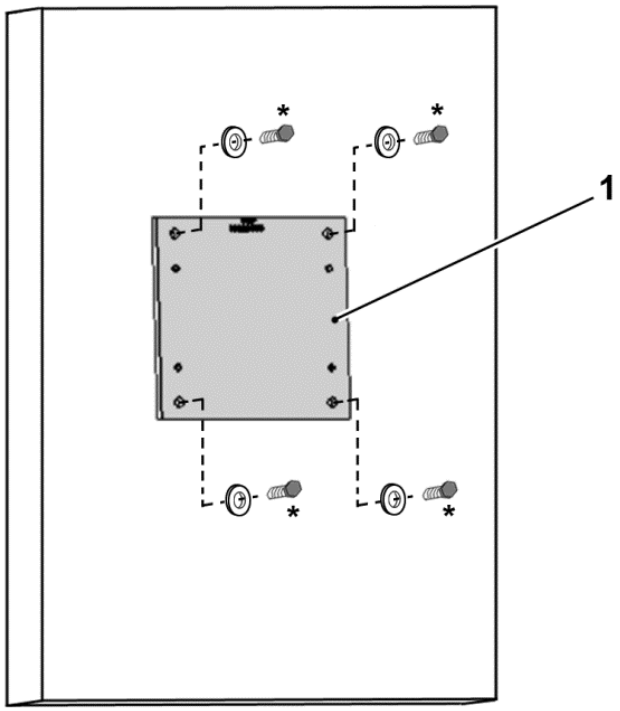

Fig. 21: Fastening adapter plate size D to the wall

NOTICE

The drive controller may not be installed without an adapter plate (1)!

- Find a position that meets the required ambient conditions described in the "Installation requirements" section.

5. Mount the adapter plate (1) on the wall with four screws*.

* The screws are not part of the scope of delivery.

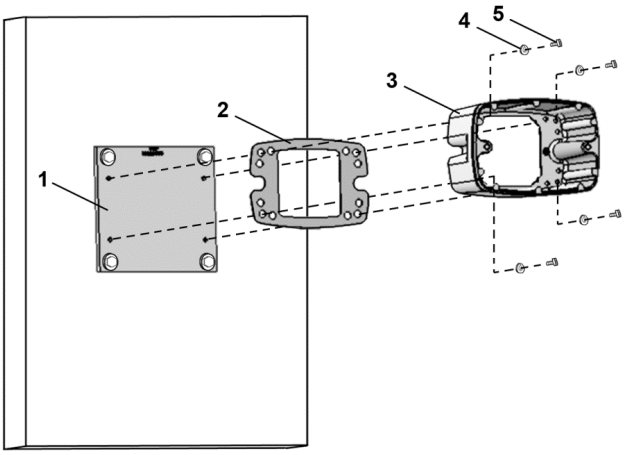

Fig. 22: Fastening the size D cup to the adapter plate

6. Mount seal (2), along with cup (3), to the adapter plate (1).
   Use the retaining bolts (5) and spring elements (4) provided (torque 8.5 Nm).

NOTICE

Please ensure that the seal (2) sits perfectly!

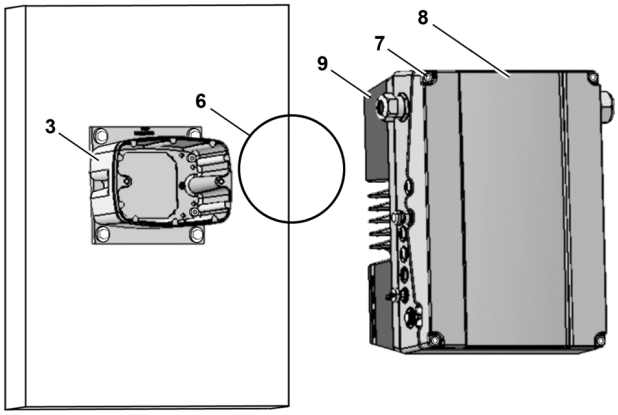

Fig. 23: Inserting O-ring seal size D

7. Insert the O-ring seal (6) in the groove of the cup (3).

NOTICE

Please ensure that the O-ring seal (6) sits perfectly!

8. Unscrew the four screws (7) from the cover (8) of the drive controller (9).
9. Take off the cover (8).

Continues on next page

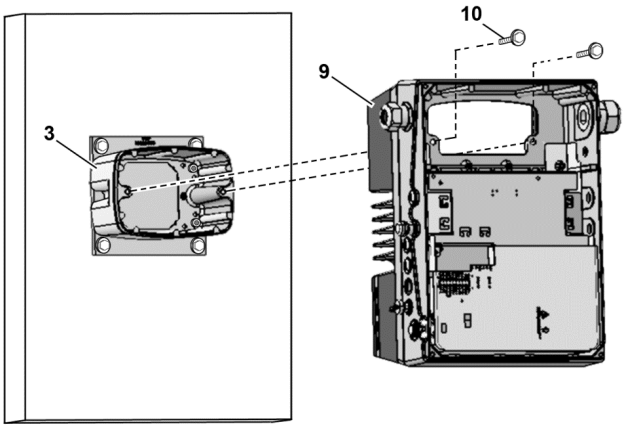

Fig. 24: Fastening drive controller to size D cup

10. Carefully place the drive controller (9) onto the cup (3), if necessary with the help of a second person.
11. Screw down both parts uniformly with the two M8 screws (10)
(torque: max. 25 Nm).

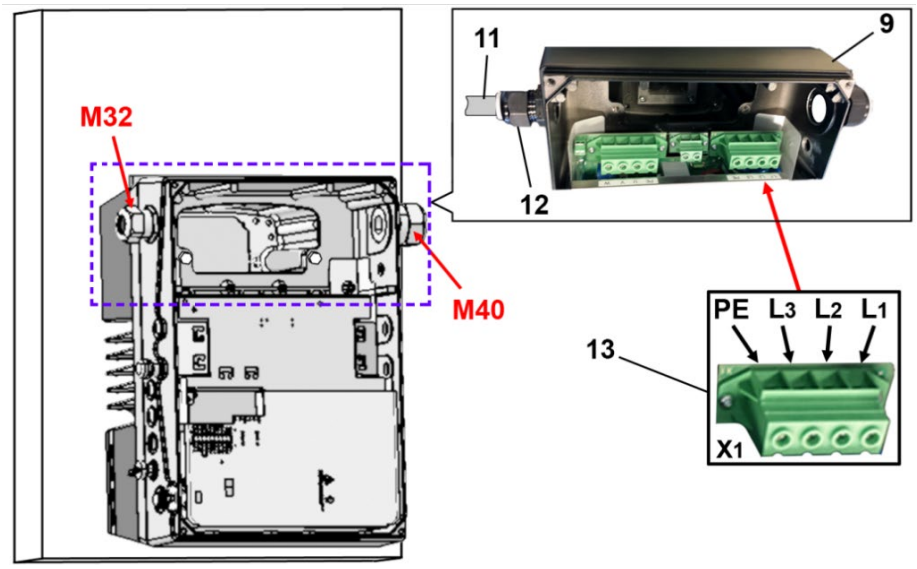

Fig. 25: Mains connection size D

12. Guide mains connection cable (11) through cable screw connection (12) [M32] into drive controller (9).

NOTICE

The cable screw connection provides strain relief, and the PE connection cable must be connected in a leading fashion (considerably longer).

13. Connect the cables with the terminals [X1] (13) as follows:

Anschluss 400 V			
L1	L2	L3	PE

The protective conductor must be connected to the "PE" contact.

Terminal no.	Designation	Assignment
1	L1	Mains phase 1
2	L2	Mains phase 2
3	L3	Mains phase 3
4	PE	Protective conductor

Tab. 13: 3~ 400 V terminal assignment X1

Terminal no.	Designation	Assignment
1	L1	DC mains (+)
2	L2	Not assigned
3	L3	DC mains (-)
4	PE	Protective conductor

Tab. 14: DC feed 565 V terminal assignment X1

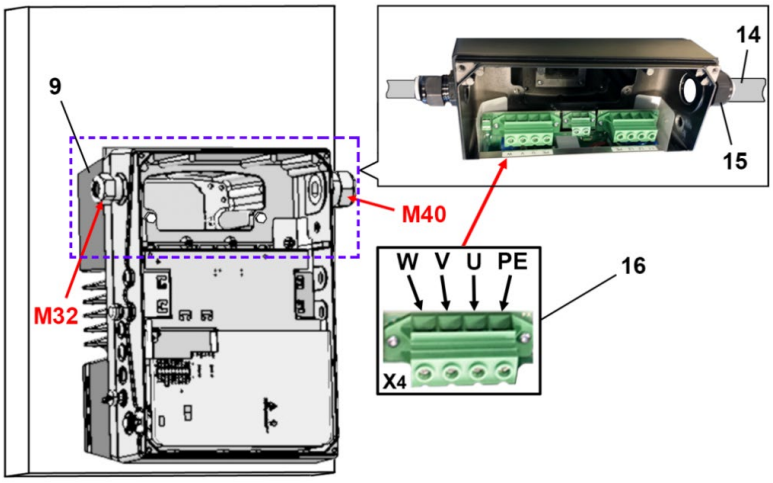

Fig. 26: Motor connection size D

14. Guide motor connection cable (14) through cable screw connection (15) [M40] into drive controller (9).

NOTICE

The cable screw connection provides strain relief, and the PE connection cable must be connected in a leading fashion (considerably longer).

15. Connect the cables with the terminals [X4] (16) as follows:

Terminal no.	Designation	Assignment
1	PE	Protective conductor
2	U	Motor phase 1
3	V	Motor phase 2
4	W	Motor phase 3

Tab. 15: Motor connection assignment X4

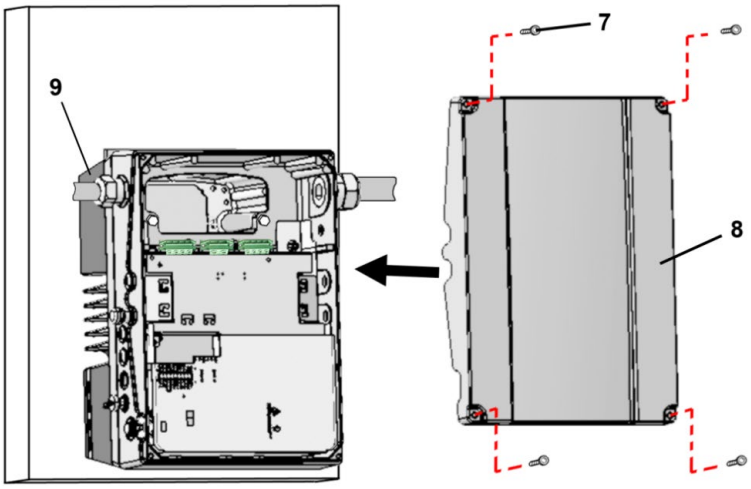

Fig. 27: Closing housing size D

16. Place cover (8) on housing of drive controller (9).
17. Screw down both parts with the four screws (7) (torque 4 Nm).

3.4.4 Power connection

The power connections should be designed as described in section 3.3 ff. Installing the drive controller integrated in the motor.

3.4.5 Brake chopper

The brake connections should be designed as described in section. 3.3.3 ff. "Connections for brake resistor".

3.4.6 Control connections

The control connections should be designed as described in section 3.4 Installing the wall-mounted drive controller ff. .

3.5 Disassembly and assembly of the INVEOR fan, size "D”

Below you will find a description of how to replace the size "D" fan on the INVEOR. For your own safety, be sure to observe the safety notices and information provided.

⚠ DANGER!

Risk of death due to fire or electrical shock!

Death or serious injury!

De-energise drive controller and secure it against being restarted.

Only allow appropriately qualified staff to undertake disassembly and assembly.

Only use staff who are trained in mounting, installation, commissioning and handling.

Always ground the device in accordance with DIN EN 61140; VDE 0140, NEC and other relevant standards.

3.5.1 Fan disassembly

⚠ DANGER!

Risk of death due to electrical shock!

Death or serious injury!

De-energise drive controller and secure it against being restarted.

⚠ DANGER!

Danger due to electrical shock and discharge. Wait two minutes (discharge time of the capacitors) after shut-down.

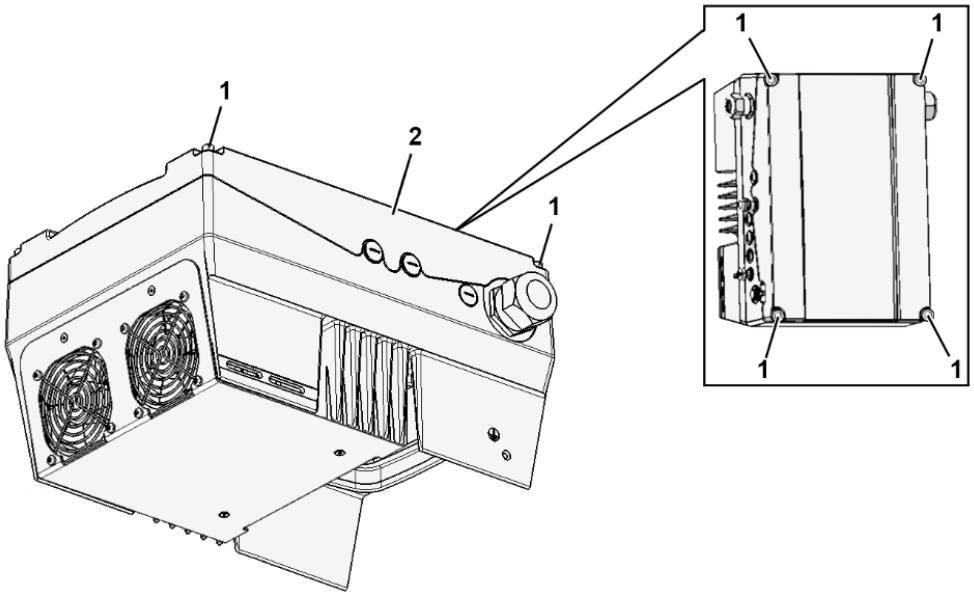

Fig. 28: Disassembly of fan, size D

1. Unscrew the four screws (1) from the cover (2) of the drive controller.
2. Take off the cover (2) of the drive controller.

Continues on next page

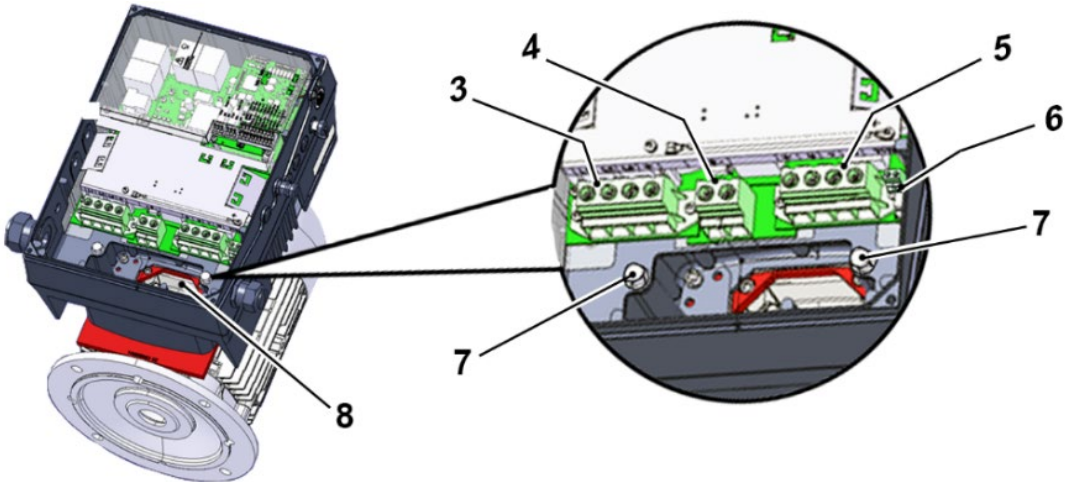

⚠ DANGER!

Risk of death due to electrical shock!
Death or serious injury!
De-energise drive controller and secure it against being restarted.

3. Disconnect the wires from the following connections:
   (3) "Mains terminal [X1]",
   (4) "Brake resistor [X2] (optional)",
   (5) "Motor terminal [X4]",
   (6) "Motor PTC/Klixon [X11]".
4. Unscrew both screws (7).
5. Carefully lift the drive controller off the cup (8) and place on a clean, level surface.

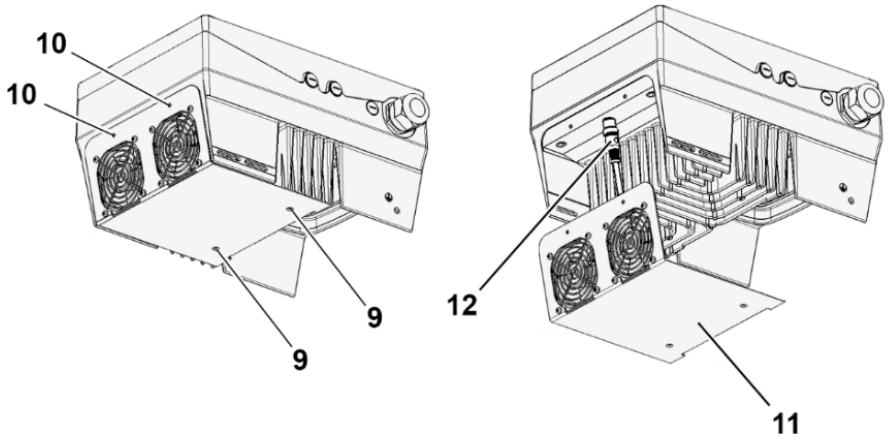

Fig. 29: Disassembly/assembly of fan, size D

6. Unscrews the screws (9) and (10).
7. Carefully release fan unit (11) from drive controller.
8. Disconnect the M12 plug (12).

3.5.2 Fan assembly

1. Plug M12 plug (12) of new fan unit (11) onto socket on drive controller.
2. Insert new fan unit (11) in drive controller and screw together with screws (9) and (10).

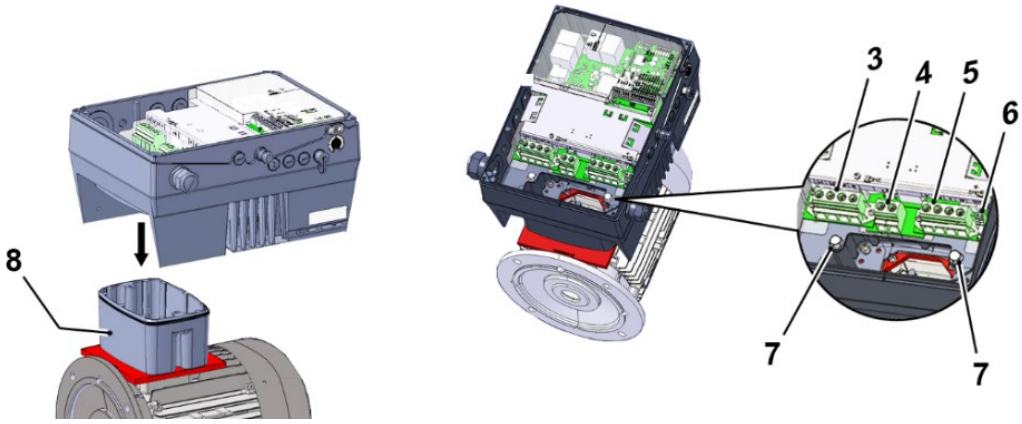

NOTICE

When placing the drive controller on the cup (8), ensure that seal (13) sits perfectly!

3. Carefully attach the drive controller to the cup (8) and secure uniformly with both M8 screws (7) (torque: max. 25.0 Nm).

DANGER!

Risk of death due to electrical shock!

Death or serious injury!

De-energise drive controller and secure it against being restarted.

4. Connect all cables to the following connections:
   (3) "Mains terminal [X1]"
   (see chapter 3.3.2 "Power connection/size D")
   (4) "Brake resistor [X2] (optional)"
   (see chapter 3.3.3)
   (5) "Motor terminal [X4]"
   (see chapter 3.3.2 "Power connection/size D")
   (6) "Motor PTC/Klixon [X11]" (optional)

Continues on next page

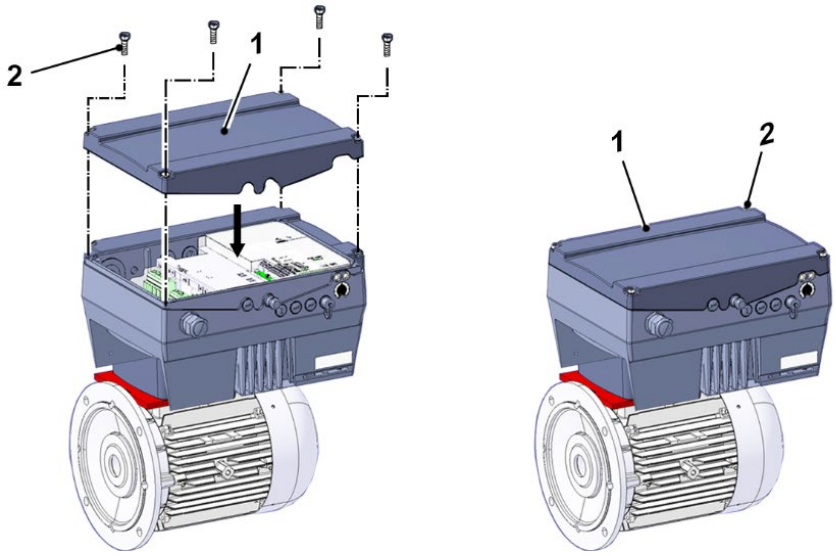

5. Place cover (1) on housing of drive controller.
6. Screw down both parts with the four screws (2) (torque: 4 Nm).

4. Commissioning

4.1 Safety instructions for commissioning

DAMAGE TO PROPERTY POSSIBLE

If the information is not observed, the drive controller could be damaged and destroyed during subsequent commissioning.

Commissioning may only be performed by qualified staff. Safety precautions and warnings must always be observed.

DANGER!

Risk of death due to electrical shock!

Death or serious injury!

Be sure that the power supply provides the correct voltage and is designed for the required current.

Use suitable circuit breakers with the prescribed nominal current between the mains and drive controller.

Use suitable fuses with appropriate current values between the mains and drive controller (see technical data).

The drive controller must be grounded with the motor according to relevant regulations. Non-compliance may result in serious injury.

4.2 Communication

The drive controller can be commissioned in the following ways:

- using the INVERTERpc PC software

Fig. 30: PC software – start screen

- using the INVEOR MMI handheld controller*

Fig. 31: MMI handheld controller

- using the MMI* in the cover (option)

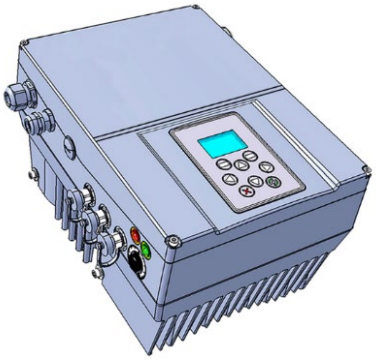

Fig. 32: MMI option

Continues on next page

* Man-machine interface

Continuation

- using Bluetooth (option)

Fig. 33: INVERTERapp

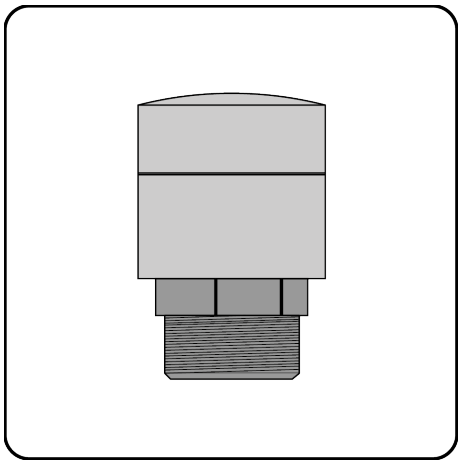

Fig. 34: Bluetooth module M16
(fitted permanently ex factory)

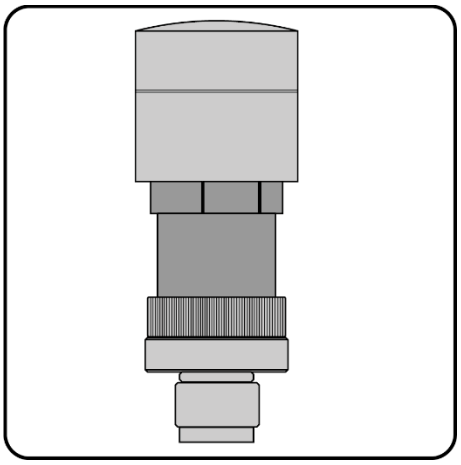

Fig. 35: Bluetooth stick M12
(optional accessory)

NOTE
If using the Bluetooth stick,
the password is fixed as 000000.

4.3 Block diagram

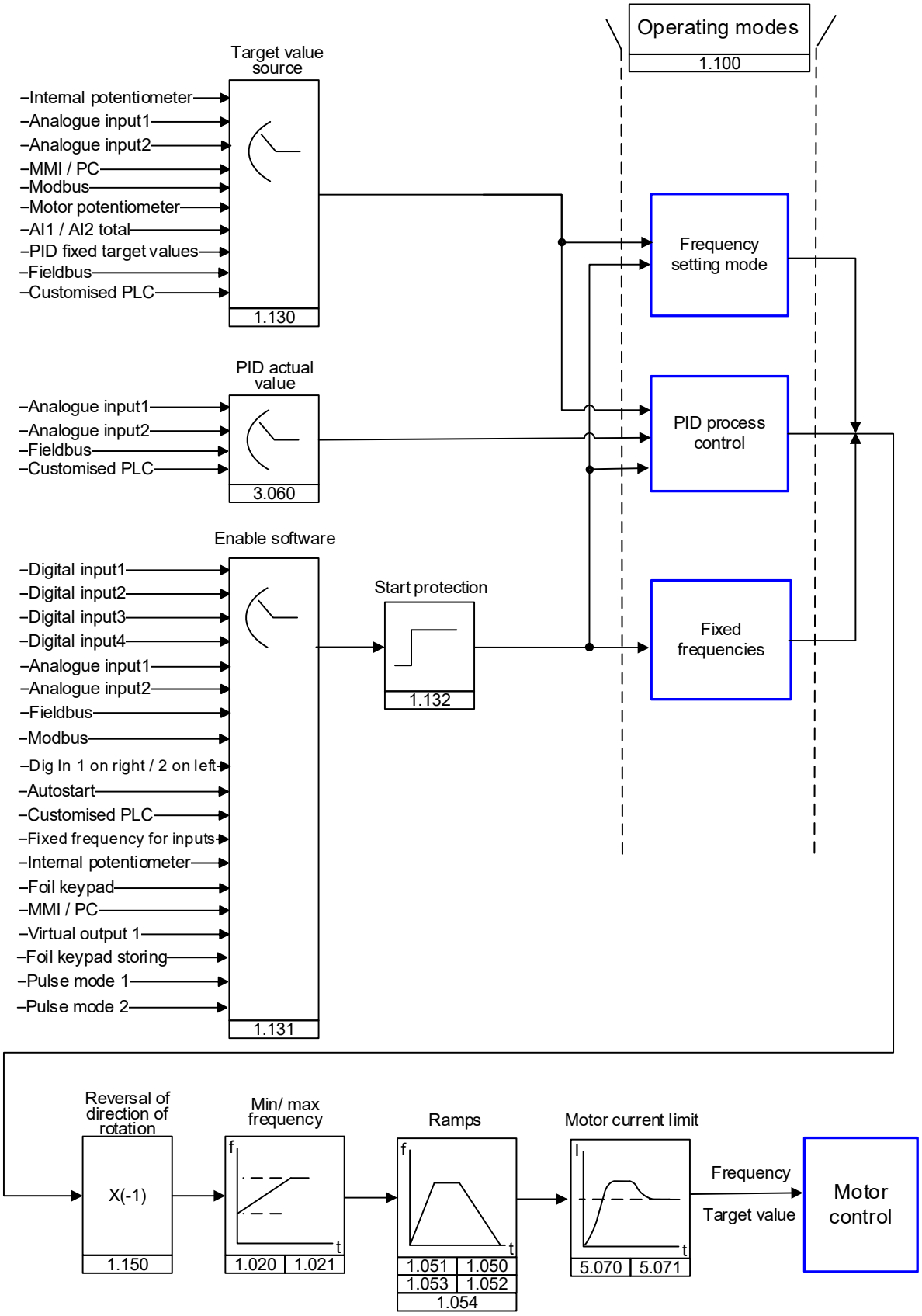

Fig. 36: General structure of target value generation

4.4 Commissioning steps

NOTICE

Parameterisation is possible prior to device installation!

Parameterisation can be performed before the drive controller is installed in the motor.

The drive control has a 24 V low-voltage input for this purpose, which can supply the electric system without requiring mains power.

The commissioning can be performed using a PC communication cable USB at M12 plug with integrated interface converter RS485/RS232 (part no. 10023950) or using the INVEOR handheld controller MMI with connection cable RJ9 at M12 plug (part no. 10004768).

4.4.1 Commissioning using the PC:

1. Install the INVERTERpc software (you can obtain programming software from KOSTAL free of charge). Operating system required: Windows XP or Windows 7 [32 / 64 bit]).
   We recommend undertaking the installation process as an administrator.
2. Connect the PC to the M12 plug M1 with the optional connection cable.
3. Load or determine the motor data record (parameters 33.031 to 33.050); it may be necessary to optimise the speed control (parameters 34.090 to 34.091).
4. Perform the application settings (ramps, inputs, outputs, target values etc.).
5. Optional: Define an access level (1 – MMI, 2 – user, 3 – manufacturer).

See Fig. of block diagram in chapter Quickstart guide 11

In order to ensure an ideal operating structure for the PC software, the parameters are classified into different access levels.

The following levels exist:

1. handheld controller: – the drive controller is programmed using the handheld controller.
2. user: – the basic parameters can be programmed into the drive controller using the PC software.
3. Manufacturer: - an extended selection of parameters can be programmed into the drive controller using the PC software.

4.4.2 Commissioning using PC, combined with MMI option

1. Install the INVERTERpc software (you can obtain programming software from KOSTAL free of charge). Operating system required: Windows XP or Windows 7 [32 / 64 bit]).
   We recommend undertaking the installation process as an administrator.
2. Connect the PC to the M12 plug M1 with the optional connection cable.

NOTICE

After the power on the drive controller has been switched on, the diagnosis interface (M12 PC/MMI) is initially inactive.

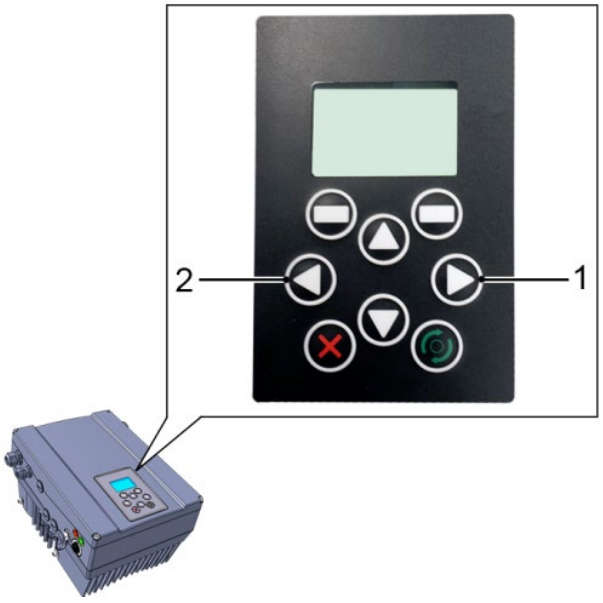

To activate this interface, the "MMI option" has to be put into standby mode.

To do this, simultaneously press buttons (1) and (2) for approx. 1.5 sec.

"Standby" appears in the MMI display and internal communication is interrupted for 25 sec.

If communication for the INVERTERpc tool is established within 25 sec., the "MMI option" remains in standby mode. Data can now be exchanged with the PC and/or an external MMI.

If communication is aborted or cannot be established within 25 sec., the "MMI option" switches from standby mode to normal mode.

Turning the display 180°

Depending on how the INVEOR is installed within the system, the display may have to be turned 180°.

You can turn the display 180° using parameter 5.200

by setting the parameter value to "1"

NOTICE

The display is only turned 180° once the "Disconnect" button has been pressed in the "INVERTERpc tool"

Alternatively, the display can also be turned 180° in "normal mode".

To do this, simultaneously press buttons (3) and (4) for approx. 1.5 sec.

The display and functional button assignment are turned 180°.

5. Parameter

This chapter contains the following:

- an introduction to the parameters
- an overview of the most important commissioning and operation parameters

5.1 Safety instructions for working with parameters

DANGER!

Risk of death due to restarting motors!

Death or serious injury!

Non-observance may result in death, serious injury or damage.

Certain parameter settings and changing parameter settings during operation may result in the INVEOR drive controller restarting automatically after the supply voltage has failed, or in undesirable changes in the operating behaviour.

NOTICE

If parameters are changed while the device is in operation, it may take a few seconds for the effect to become noticeable.

5.2 General information on parameters

5.2.1 Explanation of operating modes

The operating mode is the instance in which the target value is generated.
In the case of frequency setting mode, this is a simple conversion of the raw input target value into a rotation speed target value. In the case of PID process control, the target value and actual value are compared and the system then regulates to a specific process variable.

Frequency setting mode:

The target values from the “target value source” (1.130) are rescaled into frequency target values.

0 % is the "minimum frequency" (1.020).

100 % is the "maximum frequency" (1.021).

The target value's plus or minus sign is the decisive factor in rescaling.

PID process control:

The target value for the PID process controller is read in percentage steps as in the “frequency setting mode”. 100 % corresponds to the working range of the connected sensor, which is read in via the actual value input (selected by the “PID actual value”).

Depending on the control difference, a rotation speed value is output to the control output with the help of the amplification factors for the proportional gain (3.050), integral gain (3.051) and derivative gain (3.052).

In order to prevent the integral share from increasing infinitely in the case of uncontrollable control differences, this value is limited to a specific set value (corresponding to the "maximum frequency" (1.021)).

PID inverted:

The PID actual value can be inverted using parameter 3.061. The actual value is imported inversely, i.e. 0 V…10 V correspond internally to 100%…0%.

Please note that the target value must also be defined inversely.

An example:

A sensor with an analogue output signal (0 V…10 V) is to operate as the source of the actual value (at AIx). At an output variable of 7 V (70 %), this is to be regulated inversely. The internal actual value then corresponds to 100% – 70% = 30%.

In other words, the target value to be specified is 30 %.

PID process controller operating mode

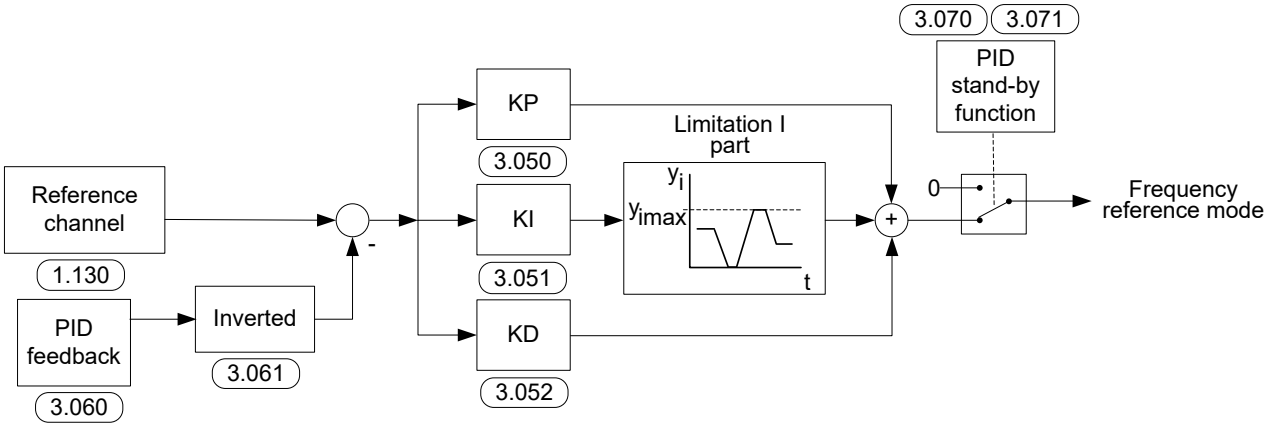

Fig. 37: PID process control

Stand-by function in PID process control

This function can provide energy savings in applications such as booster stations where PID process control is used to control to a specific process value and the pump has to run at a "minimum frequency" (1.020).
As the drive controller can reduce the rotation speed of the pump in normal operation when the process variable is reducing, but it can never fall below the “minimum frequency” (1.020), this provides an opportunity for stopping the motor if it is running during a waiting time, the “PID stand-by time” (3.070) with the “minimum frequency” (1.020).

Once the actual value deviates from the target value by the set % value, the “PID stand-by hysteresis” (3.071), the control (the motor) is started again.

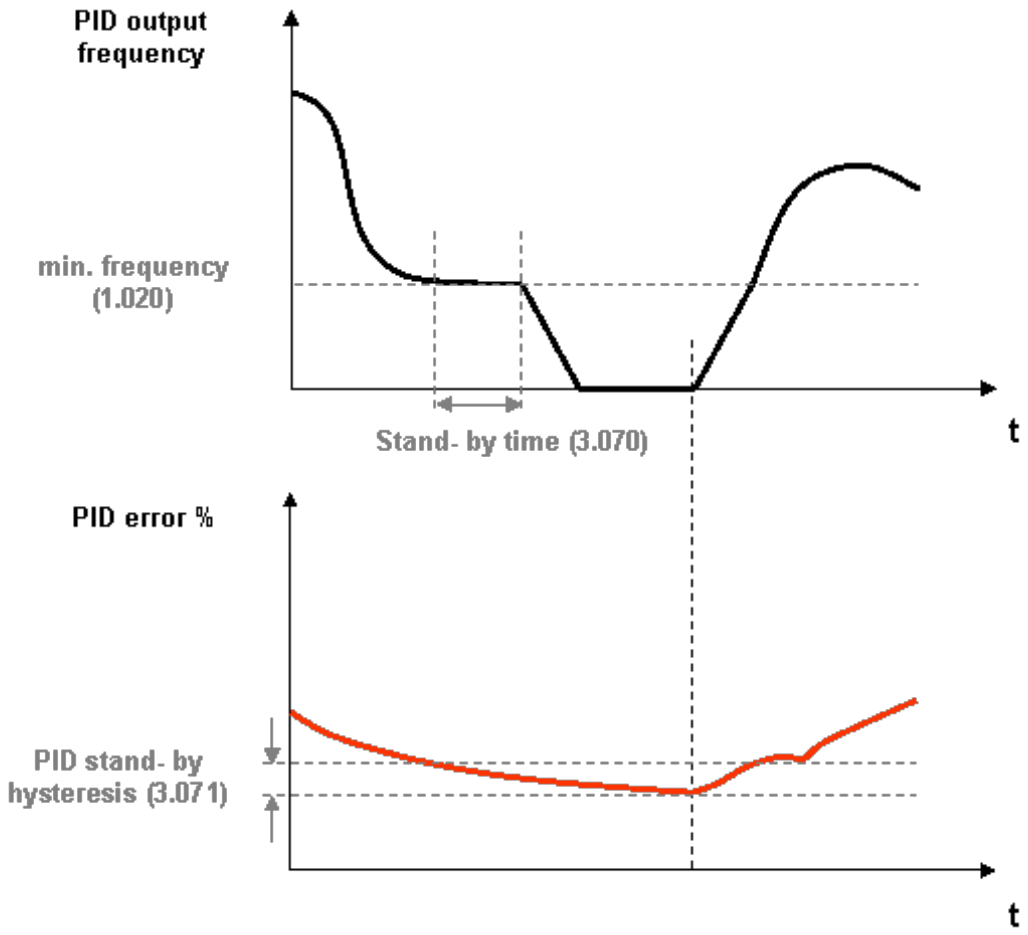

Fig. 38: Stand-by function in PID process control

Fixed frequency

This operating mode controls the drive controller with up to 7 fixed target values.
These are selected under parameter 2.050, where you can select how many fixed frequencies are to be used.

Parameter	Name	Selection options	Function	Number of digital inputs needed
2.050	Fixed frequency/mode	0	1 fixed frequency	1
		1	3 fixed frequencies	2
		2	7 fixed frequencies	3
	Foil keypad (option)	3	2 fixed frequencies	-
	Foil keypad (option)	4	2 fixed frequencies	-

Depending on the number of fixed frequencies required, up to 3 digital inputs are permanently assigned in the table.

Parameter	Name	Presetting	DI 3	DI2	DI1
1.020	Min. frequency	0 Hz	0	0	0
2.051 to 2.057	Fixed frequency 1	10 Hz	0	0	1
2.051 to 2.057	Fixed frequency 2	20 Hz	0	1	0
2.051 to 2.057	Fixed frequency 3	30 Hz	0	1	1
2.051 to 2.057	Fixed frequency 4	35 Hz	1	0	0
2.051 to 2.057	Fixed frequency 5	40 Hz	1	0	1
2.051 to 2.057	Fixed frequency 6	45 Hz	1	1	0
2.051 to 2.057	Fixed frequency 7	50 Hz	1	1	1

Tab. 16: Logic table for fixed frequencies

5.2.2 Structure of the parameter tables

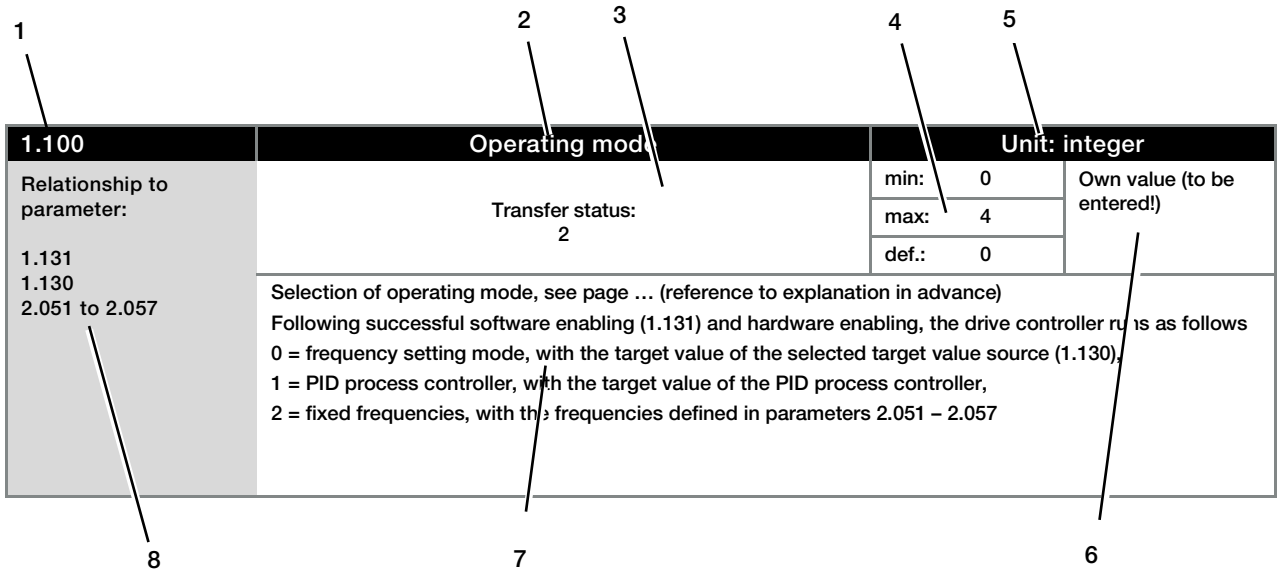

Fig. 39 Example of a parameter table

Key			
1	Parameter number	5	Unit
2	Parameter name	6	Field for entering an own value
3	Transfer status 0 = switch drive controller off and on for transfer 1 = at speed of 0 2 = during operation	7	Explanation of the parameter
4	Value range (from – to – factory setting)	8	Other parameters related to this parameter.

5.3 Application parameters

5.3.1 Basic parameter

1.020	Minimum frequency	Unit: Hz		
Relationship to parameter: 1.150 3.070 3.080 5.085	Transfer status: 2	min.:	0	Own value (to be entered!)
		max.:	400	
		def.:	0	
	The minimum frequency is the frequency which is supplied by the drive controller as soon as it is enabled and there is no additional target value. The frequency falls below this level if: a) the drive accelerates from stationary b) the frequency converter is blocked. The frequency then falls to 0 Hz before it is blocked. c) the frequency converter reverses (1.150). The field of rotation reverses at 0 Hz. d) the standby function (3.070) is active. e) the current limit is reached			

1.021	Maximum frequency	Unit: Hz		
Relationship to parameter: 1.050 1.051	Transfer status: 2	min.:	0	Own value (to be entered!)
		max.:	400	
		def.:	50	
	The maximum frequency is the highest frequency produced by the inverter depending on the target value.			

1.050	Deceleration time 1	Unit: s		
Relationship to parameter: 1.021 1.054	Transfer status: 2	min.:	0.1	Own value (to be entered!)
		max.:	1000	
		def.:	5	
	Deceleration time 1 is the time that the drive controller needs to brake to 0 Hz from the max. frequency (1.021). If the set deceleration time cannot be reached, the fastest possible deceleration time is implemented.			

1.051	Run up time 1	Unit: s		
Relationship to parameter: 1.021 1.054	Transfer status: 2	min.:	0.1	Own value (to be entered!)
		max.:	1000	
		def.:	5	
	Run up time 1 is the time that the drive controller needs to accelerate from 0 Hz to the max. frequency. The run up time can be increased as a result of certain circumstances, e.g. if the drive controller is overloaded.			

1.052	Deceleration time 2	Unit: s		
Relationship to parameter: 1.021 1.054	Transfer status: 2	min.:	0.1	Own value (to be entered!)
		max.:	1000	
		def.:	10	
	Deceleration time 2 is the time that the drive controller needs to brake to 0 Hz from the max. frequency (1.021). If the set deceleration time cannot be reached, the fastest possible deceleration time is implemented.			

1.053	Run up time 2	Unit: s		
Relationship to parameter: 1.021 1.054	Transfer status: 2	min.:	0.1	Own value (to be entered!)
		max.:	1000	
		def.:	10	
	Run up time 2 is the time that the drive controller needs to accelerate from 0 Hz to the max. frequency. The acceleration time can be increased as a result of certain circumstances, e.g. if the drive controller is overloaded.			

1.054	Ramp selection	Unit: integer		
Relationship to parameter: 1.050 - 1.053	Transfer status: 2	min.:	0	Own value (to be entered!)
		max.:	9	
		def.:	0	
	Selection of used ramp pair 0 = deceleration time 1 (1.050) / run up time 1 (1.051) 1 = deceleration time 2 (1.052) / run up time 2 (1.053) 2 = digital input 1 (false = ramp pair 1 / true = ramp pair 2) 3 = digital input 2 (false = ramp pair 1 / true = ramp pair 2) 4 = digital input 3 (false = ramp pair 1 / true = ramp pair 2) 5 = digital input 4 (false = ramp pair 1 / true = ramp pair 2) 6 = customer PLC 7 = analogue input 1 (must be selected in parameter 4.030) (V 03.70 and higher) 8 = analogue input 2 (must be selected in parameter 4.060) (V 03.70 and higher) 9 = virtual output (4.230) (V 03.70 and higher)			

1.088	Rapid stop	Unit: s		
Relationship to parameter:	Transfer status: 2	min.:	0.1	Own value (to be entered!)
		max.:	1000	
		def.:	10	
	Only for variant with functional safety The rapid stop parameter prescribes the time that the inverter requires to brake to 0 Hz from the max. speed (1.021). If the set rapid stop time cannot be achieved, the fastest possible deceleration time is implemented.			

1.100	Operating mode	Unit: integer		
Relationship to parameter: 1.130 1.131 2.051 to 2.057 3.050 to 3.071	Transfer status: 2	min.:	0	Own value (to be entered!)
		max.:	3	
		def.:	0	
	Selecting the operating mode Following software enabling (1.131) and hardware enabling, the drive controller runs as follows: 0 = frequency setting mode, with the target value of the selected target value source (1.130) 1 = PID process controller, with the target value of the PID process controller (3.050 – 3.071), 2 = fixed frequencies, with the frequencies defined in parameters 2.051 – 2.057 3 = selection via INVEOR soft PLC			

1.130	Target value source	Unit: integer		
Relationship to parameter: 3.062 to 3.069	Transfer status: 2	min.:	0	Own value (to be entered!)
		max.:	10	
		def.:	0	

Determines the source from which the target value is to be read.
0 = internal potentiometer
1 = analogue input 1
2 = analogue input 2
3 = MMI/PC
4 = SAS
6 = motor potentiometer
7= sum of analogue inputs 1 and 2
8 = PID fixed target values (3.062 to 3.069)
9 = field bus
10 = INVEOR soft PLC

1.131	Enable software	Unit: integer		
Relationship to parameter: 1.132 1.150 2.050 4.030 4.030 / 4.060	Transfer status: 2	min.:	0	Own value (to be entered!)
		max.:	16	
		def.:	0	

DANGER!

The motor may start immediately, depending on the change made.
Selection of the source for the control release.
0 = digital input 1
1 = digital input 2
2 = digital input 3
3 = digital input 4
4 = analogue input 1 (must be selected in parameter 4.030)
5 = analogue input 2 (must be selected in parameter 4.060)
6 = field bus
7 = SAS / Modbus (V 03.080 and higher)
8 = digital input 1 on right / digital input 2 on left
1.150 must be set to "0"
9 = autostart
The motor may start immediately if hardware is enabled and a target value has been provided.
This cannot be prevented even with parameter 1.132.

10 = INVEOR soft PLC
11 = fixed frequency inputs
(all inputs which were selected in parameter 2.050)
12 = internal potentiometer
13 = foil keypad (Start & Stop keys)
14 = MMI/PC
15 = virtual output (4.230) (V 03.70 and higher)
16 = foil keypad storing (V 03.70 and higher)
17 = edge of Dig In 1 start / Dig In 2 stop (V 03.92 and higher)
18 = edge for Dig In 1 start on right /
edge for Dig In 2 start on left /
Dig In 3 stop (V 03.92 and higher)
1.150 must be set to "0"

1.132	Start-up protection	Unit: integer		
Relationship to parameter: 1.131	Transfer status: 2	min.:	0	Own value (to be entered!)
		max.:	8	
		def.:	1	

Selection of behaviour in response to enabling software (parameter 1.131).
No effect if autostart was selected.
0 = immediate start with high signal at input of control enable
1 = start only with rising edge at input of control enable
2 = digital input 1 (function active with high signal)
3 = digital input 2 (function active with high signal)
4 = digital input 3 (function active with high signal)
5 = digital input 4 (function active with high signal)
6 = INVEOR soft PLC
7 = analogue input 1 (must be selected in parameter 4.030)
(V 03.70 and higher)
8 = analogue input 2 (must be selected in parameter 4.060)
(V 03.70 and higher)

1.150	Rotation direction	Unit: integer		
Relationship to parameter: 1.131 4.030 4.030 / 4.060	Transfer status: 2	min.:	0	Own value (to be entered!)
		max.:	16	
		def.:	0	

Selection of direction of rotation specification
0 = dependent on target value (depending on the plus or minus sign of the target value:
positive: forwards; negative: backwards)
1 = forwards only (no change in direction of rotation possible)
2 = backwards only (no change in direction of rotation possible)
3 = digital input 1 (0 V = forwards, 24 V = backwards)
4 = digital input 2 (0 V = forwards, 24 V = backwards)
5 = digital input 3 (0 V = forwards, 24 V = backwards)
6 = digital input 4 (0 V = forwards, 24 V = backwards)
7 = INVEOR soft PLC
8 = analogue input 1 (must be selected in parameter 4.030)
9 = analogue input 2 (must be selected in parameter 4.060)
10 = foil keypad key for reversing direction of rotation (only when motor is running)
11 = foil keypad key I forwards / 2 backwards (reversal always possible)
12 = foil keypad key I forwards / 2 backwards
(reversal only possible when motor stationary)
13 = virtual output (4.230) (V 03.70 and higher)
14 = foil keypad key for reversing direction of rotation (only in operational status) storing
(V 03.70 and higher)
15 = foil keypad key I + II storing (V 03.70 and higher)
16 = foil keypad key I + II (only if motor is stationary) stores the last
active rotation direction
(V 03.70 and higher)

1.180	Acknowledge function	Unit: integer		
Relationship to parameter: 1.181 1.182	Transfer status: 2	min.:	0	Own value (to be entered!)
		max.:	7	
		def.:	4	
	Selection of the source for error confirmation. Errors can only be acknowledged once the error is no longer present. Auto acknowledgement via parameter 1.181. 0 = manual acknowledgement not possible 1 = rising flank at digital input 1 2 = rising flank at digital input 2 3 = rising flank at digital input 3 4 = rising flank at digital input 4 5 = foil keypad (Ackn key) 6 = analogue input 1 (must be selected in parameter 4.030) (V 03.70 and higher) 7 = analogue input 2 (must be selected in parameter 4.060) (V 03.70 and higher)			

1.181	Automatic acknowledgement function	Unit: s		
Relationship to parameter: 1.180 1.182	Transfer status: 2	min.:	0	Own value (to be entered!)
		max.:	1000	
		def.:	0	
	In addition to the acknowledgement function (1.180), an automatic fault acknowledgement can be selected. 0 = no automatic acknowledgement > 0 = time for automatic resetting of error in seconds			

1.182	Number of automatic acknowledgements	Unit:		
Relationship to parameter: 1.180 1.181	Transfer status: 2	min.:	0	Own value (to be entered!)
		max.:	500	
		def.:	5	
	In addition to the automatic acknowledgement function (1.181), it is possible to limit the maximum number of automatic acknowledgements here. 0 = no restriction on automatic acknowledgements > 0 = maximum number of automatic acknowledgements			

NOTICE

INFORMATION

The internal counter for automatic acknowledgements already undertaken is reset if the motor is operated for the "maximum number of acknowledgements x auto acknowledgement time" period without any errors occurring (motor current > 0.2 A).

Example of resetting the auto acknowledgement counter

max. number of acknowledgements = 8 auto acknowledgement time = 20 sec.	8 x 20 sec. = 160 sec.

After 160 sec. of motor operation without errors, the internal counter for "auto acknowledgements" undertaken is reset to "0".

In this example, 8 "auto acknowledgements" were accepted.

If an error occurs within the 160 sec., "error 22" is triggered on the 9th acknowledgement attempt.

This error has to be acknowledged manually by switching off the mains.

5.3.2 Fixed frequency

This mode has to be selected in parameter 1.100, see also the section on selecting the operating mode.

2.050	Fixed frequency mode	Unit: integer		
Relationship to parameter: 1.100 2.051 to 2.057	Transfer status: 2	min.:	0	Own value (to be entered!)
		max.:	4	
		def.:	2	
	Selection of the digital inputs used for fixed frequencies 0 = Digital In 1 (Fixed frequency 1) (2.051) 1 = Digital In 1, 2 (Fixed frequencies 1 - 3) (2.051 to 2.053) 2 = Digital In 1, 2, 3 (Fixed frequencies 1 - 7) (2.051 to 2.057) 3 = foil keypad (key I = fixed frequency 1 / key II = fixed frequency 2) 4 = fixed frequency (key I = fixed frequency 1 / key II = fixed frequency 2) storing (V 03.70 and higher)			

2.051 to 2.057	Fixed frequency	Unit: Hz		
Relationship to parameter: 1.020 1.021 1.100 1.150 2.050	Transfer status: 2	min.:	- 400	Own value (to be entered!)
		max.:	+ 400	
		def.:	0	
	The frequencies that are to be output at the digital inputs 1 - 3 specified in parameter 2.050 depending on the switching patterns. See chapter 5.2.1 Explanation of operating modes / fixed frequency.			

5.3.3 Motor potentiometer

This mode must be selected in parameter 1.130.
The function can be used as a target value source for frequency mode and for the PID process controller.

The motor potentiometer can be used to gradually increase / decrease the target value (PID/frequency). Use parameters 2.150 to 2.154 for this purpose.

2.150	MOP digital Input	Unit: integer		
Relationship to parameter: 1.130 4.030 4.050	Transfer status: 2	min.:	0	Own value (to be entered!)
		max.:	8	
		def.:	3	
	Selection of the source for increasing and reducing the target value 0 = digital input 1 + / digital input 2 – 1 = digital input 1 + / digital input 3 – 2 = digital input 1 + / digital input 4 – 3 = digital input 2 + / digital input 3 – 4 = digital input 2 + / digital input 4 – 5 = digital input 3 + / digital input 4 – 6 = analogue input 1 + / analogue input 2 – (must be selected in parameters 4.030 / 4.050) 7 = INVEOR soft PLC 8 = foil keypad (key 1 - / key 2 +)			

2.151	MOP step range	Unit: %		
Relationship to parameter: 1.020 1.021	Transfer status: 2	min.:	0	Own value (to be entered!)
		max.:	100	
		def.:	1	
	Increments at which the target value changes per keystroke.			

2.152	MOP step time	Unit: s		
Relationship to parameter:	Transfer status: 2	min.:	0.02	Own value (to be entered!)
		max.:	1000	
		def.:	0.04	
	Indicates the time during which the target value is totalled with a permanent signal.			

2.153	MOP response time	Unit: s		
Relationship to parameter:	Transfer status: 2	min.:	0.02	Own value (to be entered!)
		max.:	1000	
		def.:	0.3	
	Indicates the time for which the signal is considered permanent.			

2.154	MOP reference memory	Unit: integer		
Relationship to parameter:	Transfer status: 2	min.:	0	Own value (to be entered!)
		max.:	1	
		def.:	0	
	Defines whether the target value of the motor potentiometer is retained even after power outage. 0 = disable 1 = enable			

5.3.4 PID process controller

This mode must be selected in parameter 1.100,
the target value source must be selected in parameter 1.130,
see also chapter 5.2.1 Explanation of operating modes / fixed frequency.

3.050	PID-P amplification factor	Unit:		
Relationship to parameter: 1.100 1.130	Transfer status: 2	min.:	0	Own value (to be entered!)
		max.:	100	
		def.:	1	
	Proportional share of PID controller amplification factor			

3.051	PID-I amplification factor	Unit: 1/s		
Relationship to parameter: 1.100 1.130	Transfer status: 2	min.:	0	Own value (to be entered!)
		max.:	100	
		def.:	1	
	Integral share of PID controller amplification factor			

3.052	PID-D amplification factor	Unit: s		
Relationship to parameter: 1.100 1.130	Transfer status: 2	min.:	0	Own value (to be entered!)
		max.:	100	
		def.:	0	
	Differential share of PID controller amplification factor			

3.055	PID mode	Unit: integer		
Relationship to parameter:	Transfer status: 2	min.:	0	Own value (to be entered!)
		max.:	1	
		def.:	0	
	(V 03.84 and higher) Switches can be made between PID modes here: 0: Standard (no consideration of actual frequency) 1: with consideration of actual frequency			

3.060	PID actual value	Unit: integer		
Relationship to parameter: 1.100 1.130 3.061	Transfer status: 2	min.:	0	Own value (to be entered!)
		max.:	3	
		def.:	0	
	Selection of the input source from which the actual value for the PID process controller is imported: 0 = analogue input 1 1 = analogue input 2 2 = INVEOR soft PLC 3 = field bus (fixed customer-specific input variable 2) (V 03.72 and higher)			

3.061	PID inverted	Unit: integer		
Relationship to parameter: 3.060	Transfer status: 2	min.:	0	Own value (to be entered!)
		max.:	1	
		def.:	0	
	The actual value source (parameter 3.060) is inverted 0 = disable 1 = enable			

3.062 to 3.068	PID fixed target values	Unit: %		
Relationship to parameter: 1.130 3.069	Transfer status: 2	min.:	0	Own value (to be entered!)
		max.:	100	
		def.:	0	
	The PID fixed target values which are to be issued depending on the switching patterns at the digital inputs 1 – 3 specified in parameter 3.069 (has to be selected in parameter 1.130).			

3.069	PID fixed target mode	Unit: integer	
Relationship to parameter: 1.100 3.062 to 3.068	Transfer status: 2	min.: 0 max.: 2 def.: 0	Own value (to be entered!)
	Selection of the digital inputs used for fixed frequencies		
	0 = Digital In 1 (PID fixed target value 1) (3.064) 1 = Digital In 1, 2 (PID fixed target values 1 – 3) (3.062 to 3.064) 2 = Digital In 1, 2, 3 (PID fixed target values 1 – 7) (3.062 to 3.068)		

3.070	PID standby time	Unit: s	
Relationship to parameter: 1.020	Transfer status: 2	min.: 0 max.: 10000 def.: 0	Own value (to be entered!)
	If the drive controller runs for the set time at its minimum frequency (parameter 1.020), the motor is stopped (0 Hz), see also Chapter 5.2.1 Explanation of operating modes / fixed frequency. 0 = disable > 0 = waiting time until stand-by function is enabled		

3.071	PID stand-by hysteresis	Unit: %	
Relationship to parameter: 3.060	Transfer status: 2	min.: 0 max.: 50 def.: 0	Own value (to be entered!)
	Condition for waking up the PID controller from stand-by. Once the control difference exceeds the set value as %, the control begins again, see also PID controller operating modes.		

3.072	PID dry run time	Unit: s	
Relationship to parameter:	Transfer status: 2	min.: 0 max.: 32767 def.: 0	Own value (to be entered!)
	(V 03.70 and higher) After this set time, if the PID actual value has not reached at least 5 % and the controller is running at the max. limit, the INVEOR switches off with error no. 16 PID dry run.		

3.073	PID nominal value min	Unit: %	
Relationship to parameter: 3.074	Transfer status: 2	min.: 0 max.: 100 def.: 0	Own value (to be entered!)
	(V 03.70 and higher) The PID nominal value can be limited using 2 parameters. Example: 0 -10 V nominal value potentiometer Read Min PID nominal value = 20 % Read Max PID nominal value = 80 % (3.074) Nominal value at < 2 V = 20 % Nominal value at 2 V – 8 V = 20 % - 80 % Nominal value at > 8 V = 80 %		

3.074	PID nominal value max	Unit: %		
Relationship to parameter: 3.073	Transfer status: 2	min.:	0	Own value (to be entered!)
		max.:	100	
		def.:	100	
	(V 03.70 and higher) The PID nominal value can be limited using 2 parameters. Example: 0 -10 V nominal value potentiometer Read Min PID nominal value = 20 % Read Max PID nominal value = 80 % (3.073) Nominal value at < 2 V = 20 % Nominal value at 2 V – 8 V = 20 % - 80 % Nominal value at > 8 V = 80 %			

3.080	PID minimum frequency 2	Unit: Hz		
Relationship to parameter: 1.020	Transfer status: 2	min.:	0	Own value (to be entered!)
		max.:	400	
		def.:	0	
	(V 03.80 and higher) The minimum frequency is calculated depending on the PID target value Example: 1.020 minimum frequency = 10 Hz 3.080 PID minimum frequency 2 = 20 Hz Minimum frequency when PID target value is 0 % = 10 Hz Minimum frequency when PID target value is 50 % = 15 Hz Minimum frequency when PID target value is 100 % = 20 Hz			

5.3.5 Analogue inputs

For analogue inputs 1 and 2 (AIx display AI1/AI2)

4.020 / 4.050	Aix input type	Unit: integer		
Relationship to parameter:	Transfer status: 2	min.:	1	Own value (to be entered!)
		max.:	2	
		def.:	1	
	Function of analogue inputs 1 / 2. 1 = voltage input 2 = current input			

4.021 / 4.051	Aix standard Low	Unit: %		
Relationship to parameter:	Transfer status: 2	min.:	0	Own value (to be entered!)
		max.:	100	
		def.:	0	
	Specifies the minimum value of the analogue inputs as a percentage of the range Example: 0…10 V and/or 0…20 mA = 0 %...100 % 2…10 V or 4…20 mA = 20 %...100 %			

4.022 / 4.052	Aix standard High	Unit: %		
Relationship to parameter:	Transfer status: 2	min.:	0	Own value (to be entered!)
		max.:	100	
		def.:	100	
	Specifies the maximum value of the analogue inputs as a percentage of the range. Example: 0…10 V and/or 0…20 mA = 0 %...100 % 2…10 V or 4…20 mA = 20 %...100 %			

4.023 / 4.053	Aix dead time	Unit: %		
Relationship to parameter:	Transfer status: 2	min.:	0	Own value (to be entered!)
		max.:	100	
		def.:	0	
	Dead time as percentage of the range of the analogue inputs.			

4.024 / 4.054	Aix filter time	Unit: s		
Relationship to parameter:	Transfer status: 2	min.:	0.02	Own value (to be entered!)
		max.:	1.00	
		def.:	0	
	Filter time of analogue inputs in seconds.			

4.030 / 4.060	Aix function	Unit: integer		
Relationship to parameter:	Transfer status: 2	min.:	0	Own value (to be entered!)
		max.:	1	
		def.:	0	
	Function of analogue inputs 1/2 0 = analogue input 1 = digital input			

4.033 / 4.063	Aix physical unit	Unit:	
Relationship to parameter: 4.034 / 4.064 4.035 / 4.065	Transfer status: 2	min.: 0 max.: 10 def.: 0	Own value (to be entered!)
	Selection of different physical values to be displayed. 0 = % 1 = bar 2 = mbar 3 = psi 4 = Pa 5 = m^3/h 6 = l/min 7 = ° C 8 = ° F 9 = m 10 = mm		

4.034 / 4.064	Aix physical minimum	Unit:	
Relationship to parameter: 4.033 / 4.063 4.035 / 4.065	Transfer status: 2	min.: - 10000 max.: + 10000 def.: 0	Own value (to be entered!)
	Selection of the lower limit of a physical value to be displayed.		

4.035 / 4.065	Aix physical maximum	Unit:	
Relationship to parameter: 4.033 / 4.063 4.034 / 4.064	Transfer status: 2	min.: - 10000 max.:+ 10000 def.: 100	Own value (to be entered!)
	Selection of the upper limit of a physical value to be displayed.		

4.036 / 4.066	Aix wire break time	Unit:	
Relationship to parameter:	Transfer status: 2	min.: 0 max.: 32767 def.: 0.5	Own value (to be entered!)
	(V 03.70 and higher) Once the mains is activated, wire break detection is only activated after this set time		

4.037 / 4.067	Aix inverted	Unit: integer	
Relationship to parameter:	Transfer status: 2	min.: 0 max.: 1 def.: 0	Own value (to be entered!)
	(V 03.80 and higher) The signal of the analogue input can be inverted here. 0 = disable (example: 0 V = 0 % 10 V = 100 %) 1 = enable (example: 0 V = 100 % 10 V = 0 %)		

5.3.6 Digital inputs

4.110 to 4.113	DIx inverted	Unit: integer	
Relationship to parameter:	Transfer status: 2	min.: 0 max.: 1 def.: 0	Own value (to be entered!)
	This parameter can be used to invert the digital input. 0 = disable 1 = enable		

5.3.7 Analogue output

4.100	AO1 function	Unit: integer	
Relationship to parameter: 4.101 4.102	Transfer status: 2	min.: 0 max.: 40 def.: 0	Own value (to be entered!)
	Selection of the process value that is output at the analogue output. Depending on the process value selected, the standardisation (4.101 / 4.102) must be adapted. 0 = Not assigned / INVEOR soft PLC 1 = Intermediate circuit voltage 2 = Grid voltage 3 = Motor voltage 4 = Motor current 5 = Actual frequency 6 = Speed measured externally by speed sensor (if available) 7 = Current angle or position (if available) 8 = IGBT temperature 9 = Inner temperature 10 = Analogue input 1 11 = Analogue input 2 12 = Target frequency 13 = Motor rating 14 = Torque 15 = Field bus 16 = PID target value (V 03.60 and higher) 17 = PID actual value (V 03.60 and higher) 18 = Target frequency value after ramp (V 03.74 and higher) 19 = Actual speed value (V 03.74 and higher) 20 = Actual frequency value sum (V 03.74 and higher) 21 = Torque sum (V 03.74 and higher) 22 = Target frequency value after ramp sum (V 03.74 and higher) 23 = Target frequency value sum (V 03.74 and higher) 24 = Actual speed value sum (V 03.74 and higher)		

4.101	AO1 standard Low	Unit:	
Relationship to parameter: 4.100	Transfer status: 2	min.: - 10000 max.:+ 10000 def.: 0	Own value (to be entered!)
	Describes which area is to be broken down into the 0-10 V output voltage or the 0-20 mA output current.		

4.102	AO1 standard High	Unit:	
Relationship to parameter: 4.100	Transfer status: 2	min.: - 10000 max.:+ 10000 def.: 0	Own value (to be entered!)
	Describes which area is to be broken down into the 0-10 V output voltage or the 0-20 mA output current.		

5.3.8 Digital outputs

For digital outputs 1 and 2 (Dox display DO1 / DO2)

4.150 / 4.170	Dox function	Unit: integer	
Relationship to parameter: 4.151 / 4.171 4.152 / 4.172	Transfer status: 2	min.: 0 max.: 51 def.: 0	Own value (to be entered!)
	Selection of the process variable to which the output should switch. 0 = Not assigned / INVEOR soft PLC 1 = Intermediate circuit voltage 2 = Grid voltage 3 = Motor voltage 4 = Motor current 5 = Actual frequency value 6 = - 7 = - 8 = IGBT temperature 9 = Inner temperature 10 = Error (NO) 11 = Error inverted (NC) 12 = Limit steps enable 13 = Digital input 1 14 = Digital input 2 15 = Digital input 3 16 = Digital input 4 17 = Ready for operation (mains supply on, no HW enable, motor stationary) 18 = Ready (mains supply on, HW enable set, motor stationary) 19 = Operation (mains supply on, HW enable set, motor running) 20 = Ready for operation + Ready 21 = Ready for operation + Ready + Operation 22 = Ready + Operation 23 = Motor rating 24 = Torque 25 = Field bus 26 = Analogue input 1 (V 03.60 and higher) 27 = Analogue input 2 (V 03.60 and higher) 28 = PID target value (V 03.60 and higher) 29 = PID actual value (V 03.60 and higher) 30 = STO channel 1 (V 03.70 and higher) 31 = STO channel 2 (V 03.70 and higher) 32 = Target frequency value after ramp (V 03.70 and higher) 33 = Target frequency value (V 03.70 and higher) 34 = Actual speed value (V 03.70 and higher) 35 = Actual frequency value sum (V 03.70 and higher) 36 = Torque sum (V 03.70 and higher) 37 = Target frequency value after ramp sum (V 03.70 and higher) 38 = Target frequency value sum (V 03.70 and higher) 39 = Actual speed value sum (V 03.70 and higher) 40 = Virtual output (V03.92 and higher) 50 = Motor current limit enabled (V 03.70 and higher) 51 = Nominal-actual comparison (para. 6.070 – 6.071) (V 03.70 and higher)		

4.151 / 4.171	Dox on	Unit:	
Relationship to parameter: 4.150 / 4.170	Transfer status: 2	min.: - 32767 max.: 32767 def.: 0	Own value (to be entered!)
	If the set process variable exceeds the switch-on limit, the output is set to 1.		

4.152 / 4.172	Dox off	Unit:	
Relationship to parameter: 4.150 / 4.170	Transfer status: 2	min.: - 32767 max.: 32767 def.: 0	Own value (to be entered!)
	If the set process variable exceeds the switch-off limit, the output is again set to 0.		

5.3.9 Relay

For relays 1 and 2 (rel. X – display rel. 1/ rel. 2)

4.190 / 4.210	Rel.x function	Unit: integer	
Relationship to parameter: 4.191 / 4.211 4.192 / 4.212	Transfer status: 2	min.: 0 max.: 51 def.: 0	Own value (to be entered!)
	Selection of the process variable to which the output should switch. 0 = Not assigned / INVEOR soft PLC 1 = Intermediate circuit voltage 2 = Grid voltage 3 = Motor voltage 4 = Motor current 5 = Actual frequency value 6 = - 7 = - 8 = IGBT temperature 9 = Inner temperature 10 = Error (NO) 11 = Error inverted (NC) 12 = Limit steps enable 13 = Digital input 1 14 = Digital input 2 15 = Digital input 3 16 = Digital input 4 17 = Ready for operation (mains supply on, no HW enable, motor stationary) 18 = Ready (mains supply on, HW enable set, motor stationary) 19 = Operation (mains supply on, HW enable set, motor running) 20 = Ready for operation + Ready 21 = Ready for operation + Ready + Operation 22 = Ready + Operation 23 = Motor rating 24 = Torque 25 = Field bus Table continues on next page		

4.190 / 4.210	Rel.x function	Unit: integer	
Relationship to parameter: 4.191 / 4.211 4.192 / 4.212	Transfer status: 2	min.: 0 max.: 51 def.: 0	Own value (to be entered!)
	Selection of the process variable to which the output should switch. Continuation of table 26 = Analogue input 1 (V 03.60 and higher) 27 = Analogue input 2 (V 03.60 and higher) 28 = PID target value (V 03.60 and higher) 29 = PID actual value (V 03.60 and higher) 30 = STO channel 1 (V 03.70 and higher) 31 = STO channel 2 (V 03.70 and higher) 32 = Target frequency value after ramp (V 03.70 and higher) 33 = Target frequency value (V 03.70 and higher) 34 = Actual speed value (V 03.70 and higher) 35 = Actual frequency value sum (V 03.70 and higher) 36 = Torque sum (V 03.70 and higher) 37 = Target frequency value after ramp sum (V 03.70 and higher) 38 = Target frequency value sum (V 03.70 and higher) 39 = Actual speed value sum (V 03.70 and higher) 40 = Virtual output (V03.92 and higher) 50 = Motor current limit enabled (V 03.70 and higher) 51 = Nominal-actual comparison (para. 6.070 – 6.071) (V 03.70 and higher)		

4.191 / 4.211	Rel.x on	Unit:	
Relationship to parameter: 4.190 / 4.210	Transfer status: 2	min.: - 32767 max.: 32767 def.: 0	Own value (to be entered!)
	If the set process variable exceeds the switch-on limit, the output is set to 1.		

4.192 / 4.212	Rel.x off	Unit:	
Relationship to parameter: 4.190 / 4.210	Transfer status: 2	min: - 32767 max: 32767 def.: 0	Own value (to be entered!)
	If the set process variable exceeds the switch-off limit, the output is again set to 0.		

4.193/ 4.213	Rel.x on delay	Unit: s	
Relationship to parameter: 4.194 / 4.214	Transfer status: 2	min.: 0 max.: 10000 def.: 0	Own value (to be entered!)
	Specifies the length of the switch-on delay.		

4.194/ 4.214	Rel.x off delay	Unit:	
Relationship to parameter: 4.193 / 4.213	Transfer status: 2	min.: 0 max.: 10000 def.: 0	Own value (to be entered!)
	Specifies the length of the switch-off delay.		

5.3.10 Virtual output

The virtual output can be parameterised like a relay and is available as an option with the following parameters:
1.131 Software enable / 1.150 Direction of rotation / 1.054 Ramp selection /
5.090 Parameter set change / 5.010 + 5.011 External error 1 + 2

4.230	VO function	Unit: integer		
Relationship to parameter: 1.054 1.131 1.150 4.231 4.232 5.010 / 5.011 5.010 / 5.011 5.090	Transfer status: 2	min.:	0	Own value (to be entered!)
		max.:	51	
		def.:	0	

(V 03.70 and higher)
Selection of the process variable to which the output should switch.

0	=	Not assigned / INVEOR soft PLC
1	=	Intermediate circuit voltage
2	=	Grid voltage
3	=	Motor voltage
4	=	Motor current
5	=	Actual frequency value
6	=	-
7	=	-
8	=	IGBT temperature
9	=	Inner temperature
10	=	Error (NO)
11	=	Error inverted (NC)
12	=	Limit steps enable
13	=	Digital input 1
14	=	Digital input 2
15	=	Digital input 3
16	=	Digital input 4
17	=	Ready for operation (mains supply on, no HW enable, motor stationary)
18	=	Ready (mains supply on, HW enable set, motor stationary)
19	=	Operation (mains supply on, HW enable set, motor running)
20	=	Ready for operation + Ready
21	=	Ready for operation + Ready + Operation
22	=	Ready + Operation
23	=	Motor rating
24	=	Torque
25	=	Fieldbus (V 03.84 and higher)
26	=	Analogue input 1
27	=	Analogue input 2
28	=	PID target value
29	=	PID actual value
30	=	STO channel 1
31	=	STO channel 2
32	=	Nominal frequency value after ramp
33	=	Target frequency value
34	=	Actual speed value
35	=	Actual frequency value sum
36	=	Torque sum
37	=	Nominal frequency value after ramp sum
38	=	Target frequency value sum
39	=	Actual speed value sum
50	=	Motor current limit enabled
51	=	Nominal-actual comparison (para. 6.070 – 6.071)

4.231	VO-On	Unit:		
Relationship to parameter: 4.230	Transfer status: 2	min.:	- 32767	Own value (to be entered!)
		max.:	32767	
		def.:	0	

If the set process variable exceeds the switch-on limit, the output is set to 1.

4.232	VO-Off	Unit:	
Relationship to parameter: 4.230	Transfer status: 2	min.: - 32767 max.: 32767 def.: 0	Own value (to be entered!)
	If the set process variable exceeds the switch-off limit, the output is again set to 0.		

4.233	VO-On delay	Unit: s	
Relationship to parameter: 4.234	Transfer status: 2	min.: 0 max.: 10000 def.: 0	Own value (to be entered!)
	Specifies the length of the switch-on delay.		

4.234	VO-Off delay	Unit:	
Relationship to parameter: 4.233	Transfer status: 2	min.: 0 max.: 10000 def.: 0	Own value (to be entered!)
	Specifies the length of the switch-off delay.		

4,235	VO inverted	Unit: integer	
Relationship to parameter: 4.230	Transfer status: 2	min.: 0 max.: 1 def.: 0	Own value (to be entered!)
	(V03.92 and higher) This parameter can be used to invert the virtual output. 0 = disable 1 = enable		

5.3.11 External fault

5.010 / 5.011	External fault 1/2	Unit: integer	
Relationship to parameter: 4.110 / 4.113 4.230	Transfer status: 2	min.: 0 max.: 7 def.: 0	Own value (to be entered!)
	Selection of source via which an external fault can be reported. 0 = Not assigned / INVEOR soft PLC 1 = Digital input 1 2 = Digital input 2 3 = Digital input 3 4 = Digital input 4 5 = Virtual output (parameter 4.230) (V 03.70 and higher) 6 = Analogue input 1 (must be selected in parameter 4.030) (V 03.70 and higher) 7 = Analogue input 2 (must be selected in parameter 4.060) (V 03.70 and higher) If there is a high signal at the selected digital input, the drive controller with error no. 23 / 24, switches external error ½. Parameters 4.110 to 4.113 Dix inverse can be used to invert the logic of the digital input.		

5.3.12 Motor current limit

This function limits the motor current to a parameterised maximum value after a parameterised current-time zone has been reached.

This motor current limit is monitored at application level and thereby limits with relatively low dynamics.
This has to be taken into consideration when selecting this function.

The maximum value is determined using the “motor current limit as %” parameter (5.070).
This is stated as a percentage and relates to the nominal motor current specified in the “motor current” type plate data (33.031).

The maximum current-time zone is calculated from the product of the “motor current limit in s” parameter (5.071) and the fixed overcurrent of 50% of the required motor current limit.

As soon as this current-time zone is exceeded, the motor current is restricted to the limit value by reducing the speed. If the output current of the drive controller exceeds the motor current (parameter 33.031) multiplied by the set limit as % (parameter 5.070) for the set time (parameter 5.071), the output current of the drive controller is limited permanently to the parametrised value.

The entire function can be deactivated by setting the “motor current limit as %” parameter (5.070) to zero.

5.070	Motor current limit as %	Unit: %		
Relationship to parameter: 5.071 33.031	Transfer status: 2	min.:	0	Own value (to be entered!)
		max.:	250	
		def.:	0	
	0 = disable See description 5.3.1			

5.071	Motor current limit S	Unit: s		
Relationship to parameter: 5.070 33.031	Transfer status: 2	min.:	0	Own value (to be entered!)
		max.:	100	
		def.:	1	
	See description 5.3.1			

5.075	Gearbox factor	Unit:		
Relationship to parameter: 33.034	Transfer status: 2	min.:	0	Own value (to be entered!)
		max.:	1000	
		def.:	1	
	A gearbox factor can be set here. The mechanical speed display can be adjusted using the gearbox factor.			

5.3.13 Stall detection

5.080	Blocking detection	Unit: integer		
Relationship to parameter: 5.081 34.110	Transfer status: 2	min.:	0	Own value (to be entered!)
		max.:	1	
		def.:	0	
	This parameter can be used to activate stall detection. 0 = disable 1 = enable This function only works reliably if the motor data has been entered correctly and the slip compensation has not been deactivated.			

5.081	Blocking time	Unit: s		
Relationship to parameter: 5.080	Transfer status: 2	min.:	0	Own value (to be entered!)
		max.:	50	
		def.:	2	
	Indicates the time after which a blockage is detected.			

5.3.14 Additional function

5.082	Start-up error active	Unit: integer		
Relationship to parameter:	Transfer status: 2	min.:	0	Own value (to be entered!)
		max.:	1	
		def.:	1	
	(V 03.70 and higher) Start-up error is defined as follows: Actual value does not reach 10 % of the rated motor frequency after 30 seconds (if target frequency < 10 %, the error is not generated). If the acceleration time is parametrised as > 60 seconds, half the acceleration time is used in place of the 30 seconds. 0 = Function disabled 1 = Function enabled			

5.083	Deactivation error log 11	Unit: integer		
Relationship to parameter:	Transfer status: 2	min.:	0	Own value (to be entered!)
		max.:	10	
		def.:	0	
	(V 03.94 and higher) If supplied with external 24 V, the logging of error no. 11 "Time out power" can be suppressed here. The error counter is not affected. 0 = Function disabled 1 = Function enabled (Error number 11 is not logged) 2 = Function enabled (Error no.11 issued as a warning)			

5.085	F. min monitoring	Unit: s		
Relationship to parameter: 1.020	Transfer status: 2	min.:	0	Own value (to be entered!)
		max.:	10000	
		def.:	0	
	(V 03.92 and higher) The delay for monitoring the minimum frequency can be set here. If the minimum frequency for the set time is not reached, error 28 is generated. 0s = function disabled >0s = function enabled The time must be long enough for the motor to be able to reliably start.			

5.086	F. max monitoring	Unit: s		
Relationship to parameter: 1.021	Transfer status: 2	min.:	0	Own value (to be entered!)
		max.:	10000	
		def.:	0	
	(V 03.92 and higher) The delay for monitoring the maximum frequency can be set here. If the maximum frequency for the set time is exceeded, error 28 is generated. 0s = function disabled >0s = function enabled			

5.090	Parameter set change	Unit: integer		
Relationship to parameter: 4.030 / 4.060 4.230	Transfer status: 2	min.:	0	Own value (to be entered!)
		max.:	12	
		def.:	0	
	Selection of the active data set. 0 = Not used 1 = Data set 1 active 2 = Data set 2 active 3 = Digital input 1 4 = Digital input 2 5 = Digital input 3 6 = Digital input 4 7 = INVEOR soft PLC 8 = Virtual output (parameter 4.230) (V 03.70 and higher) 9 = Analogue input 1 (must be selected in parameter 4.030) (V 03.70 and higher) 10 = Analogue input 2 (must be selected in parameter 4.060) (V 03.70 and higher) 11 = Foil keypad key I for data set 1, key II for data set 2 (V 03.70 and higher) 12 = Foil keypad key I for data set 1, key II for data set 2 storing (V 03.70 and higher)			
	The 2nd data set is only displayed in the PC software if this parameter is <> 0. The values of the data set currently selected are always displayed in the MMI.			

5.3.15 MMI Parameters

5.200	Turning MMI* display	Unit: integer		
Relationship to parameter:	Transfer status: 2	min.:	0	Own value (to be entered!)
		max.:	1	
		def.:	0	
	(V 03.80 and higher) Only for MMI in cover. Here the user can define whether the screen / key assignment is turned 180°. 0 = Function disabled 1 = Function enabled			

5.201	Save MMI* display	Unit: integer		
Relationship to parameter:	Transfer status: 2	min.:	1	Own value (to be entered!)
		max.:	5	
		def.:	1	
	(V 03.80 and higher) The status screen displayed in the MMI * can be selected here. 1 = status 01: Target / actual frequency / motor current 2 = status 02: Speed / motor current / process value 1 3 = status 03: Speed / motor current / process value 2 4 = status 04: Speed / PID target value / PID actual value 5 = status 05: Customer PLC output variable 1 / 2 / 3			

* Man-machine interface

5.202	MMI* password	Unit: integer		
Relationship to parameter:	Transfer status: 2	min.:	0	Own value (to be entered!)
		max.:	9999	
		def.:	0	
	(V 03.88 and higher) A password can be allocated here, which is requested when expert mode is selected in the MMI *. 0: Password request deactivated The password can be individually set in both data sets.			

5.210	MMI* option language	Unit: integer		
Relationship to parameter:	Transfer status: 2	min.:	0	Own value (to be entered!)
		max.:	1	
		def.:	0	
	(V 03.88 and higher) This parameter can be used to select the language which the MMI * option displays. 0 = local language (factory setting is German) 1 = English This setting does not affect the language choice for the MMI handheld controller.			

5.3.16 Fieldbus

6.010	Ethernet Fieldbus	Unit: integer		
Relationship to parameter:	Transfer status: 0	min.:	0	Own value (to be entered!)
		max.:	1	
		def.:	0	
	FOR DEVICE VARIANT WITH EHTERNET FIELD BUS MODULES (z. B. AP17 / AP26 / AP47 / AP56) only. This parameter is used to select the Ethernet fieldbus nude: 0 = Profinet 1 = Sercos III **NOTICE** May result in destruction of the device. The INVEOR must be de-energised once after the parameter has been changed! Once the voltage is activated, the selected fieldbus cycle is loaded, this process may take one to two minutes. The INVEOR must not be switched off during this time! Once successfully loaded, the INVEOR restarts!			

6.060	Fieldbus address	Unit: integer		
Relationship to parameter:	Transfer status: 0	min.:	0	Own value (to be entered!)
		max.:	127	
		def.:	0	
	For this address to be used, the address coding switches in the device must be set to 00. A change to the fieldbus address is only undertaken once INVEOR is restarted (V 03.80 and higher) Profibus devices are automatically set to the "Default 125" address with address coding setting "00" and parameter "0".			

6.061	Field bus baud rate	Unit: integer		
Relationship to parameter:	Transfer status: 2	min.: 1	0	Own value (to be entered!)
		max.:	8	
		def.:	2	
	Only for CanOpen:0 = 1 Mbit, 2 = 500 kBit, 3 = 250 kBit, 4 = 125 kBit, 6 = 50 kBit, 7 = 20 kBit, 8 = 10 kBit			

* Man-machine interface

6.062	Bus time-out	Unit in s		
Relationship to parameter:	Transfer status: 2	min.:	0	Own value (to be entered!)
		max.:	100	
		def.:	5	
	Bus timeout, if no fieldbus telegram is received after the set time has expired, the INVEOR shuts down with the "Bus timeout" error. The function is only activated once a telegram has been successfully received. 0 = Monitoring disabled			

NOTICE

Changing a parameter value via the fieldbus includes direct EEPROM write access

6.070 / 6.071	Target / nominal value deviation	Unit: %		
Relationship to parameter: 4.150 / 4.170 4.190 / 4.210 4.230	Transfer status: 2	min.: 0 % / 0 sec.		Own value (to be entered!)
		max.: 100 % / 32767 sec.		
		def.: 0 % / 0 sec.		
	A target / actual value comparison can be undertaken with this function. The result is output via the field bus status word or a digital output. Parameter 6.070 can be used to define the tolerance range of the target value. Parameter 6.071 can be used to set the time for which the actual value has to be outside the tolerance range before the output is reset. Example: Operating mode = PID control PID target value = 50 % 6.070 = 10 % 6.071 = 1 sec. As soon as the actual value is between 40 % and 60 %, the output is set. If the actual value is outside 40 % to 60 % for 1 sec., the output is reset.			

5.3.17 Bluetooth

6.202	Bluetooth password	Unit integer		
Relationship to parameter:	Transfer status: 0	min.:	0	Own value (to be entered!)
		max.:	999999	
		def.:	000000	
	(V 03.92 and higher) The Bluetooth standard 4.2 low energy is used for communication. A 6-digit password is absolutely essential for this. Bluetooth module (fitted permanently ex factory) A password can be allocated here, which is requested when establishing a connection between the KOSTAL INVERTERapp and permanently fitted Bluetooth module. If a password with fewer than 6 digits is entered, leading zeros are added. 0 = 000000 1 = 000001			
	Bluetooth stick If using the Bluetooth stick, the password is fixed as 000000.			

6.203	Bluetooth strength	Unit integer	
Relationship to parameter:	Transfer status: 0	min.: 0 max.: 7 def.: 0	Own value (to be entered!)
	(V 03.92 and higher) Bluetooth module (fitted permanently ex factory) The transmission power of the Bluetooth module permanently fitted ex factory can be reduced here. 0: 4 dB 1: 0 dB 2: -4 dB 3: -8 dB 4: -12 dB 5: -16 dB 6: -20 dB 7: -30 dB		
	Bluetooth stick If using the Bluetooth stick, the maximum transmission power is fixed.		

	Bluetooth name	Unit: Text	
Relationship to parameter: 4.150 / 4.170 4.190 / 4.210 4.230	Transfer status: 2	min.: 3 characters max.: 10 characters def.: INV-xxx-xx	Own value (to be entered!)
	(V 03.92 and higher) Bluetooth module (fitted permanently ex factory) The PC software (Tools Bluetooth device name) can be used to specify an individual name for the permanent Bluetooth module.		
	Bluetooth stick If using the Bluetooth stick, the name “INV stick” is fixed.		

5.4 Performance parameters

5.4.1 Motor data

33.001	Type of motor	Unit: integer	
Relationship to parameter: 33.010	Transfer status: 1	min.: 1 max.: 2 def.: 1	Own value (to be entered!)
	Selection of type of motor. 1 = asynchronous motor 2 = synchronous motor The parameters are shown depending on the type of motor selected. The type of control (parameter 34.010) must also be selected.		

33.015	R optimisation	Unit: %	
Relationship to parameter:	Transfer status: 1	min.: 0 max.: 200 def.: 100	Own value (to be entered!)
	If necessary, this parameter can be used to optimise the start-up behaviour.		

33.016	Motor phase monitoring	Unit: integer		
Relationship to parameter:	Transfer status: 1	min.:	0	Own value (to be entered!)
		max.:	1	
		def.:	1	
	(V 03.72 and higher) The "Motor connection interrupted" error monitoring (error -45) can be disabled with this parameter. 0 = Monitoring disabled 1 = Monitoring enabled			

33.031	Motor current	Unit: A		
Relationship to parameter: 5.070	Transfer status: 1	min.:	0	Own value (to be entered!)
		max.:	150	
		def.:	0	
	This is used to set the nominal motor current $I_{M,N}$ for either the star or triangle connection.			

33.032	Motor rating	Unit: W		
Relationship to parameter:	Transfer status: 1	min.:	0	Own value (to be entered!)
		max.:	55000	
		def.:	0	
	A performance value [W] $P_{M,N}$ has to be set here that corresponds to the nominal motor rating.			

33.034	Motor speed	Unit: rpm		
Relationship to parameter: 34.120 5.075	Transfer status: 1	min:	0	Own value (to be entered!)
		max:	10000	
		def.:	0	
	The value from the motor's type plate data has to be entered here for the nominal motor rotation speed $n_{M,N}$.			

33.035	Motor frequency	Unit: Hz		
Relationship to parameter:	Transfer status: 1	min.:	10	Own value (to be entered!)
		max.:	400	
		def.:	0	
	This is where the nominal motor frequency $f_{M,N}$ is set.			

33.050	Stator resistance	Unit: Ohm		
Relationship to parameter:	Transfer status: 1	min.:	0	Own value (to be entered!)
		max.:	100	
		def.:	0.001	
	The stator resistance can be optimised here, if the automatically determined value (motor identification) is insufficient.			

33.105	Leakage inductance	Unit: H	
Relationship to parameter:	Transfer status: 1	min.: 0 max.: 1 def.: 0	Own value (to be entered!)
	Only for asynchronous motors. Here the leakage inductance can be optimised if the automatically calculated value (of motor identification) isn't sufficient.		

33.110	Motor voltage	Unit: V	
Relationship to parameter:	Transfer status: 1	min.: 0 max.: 1500 def.: 0	Own value (to be entered!)
	Only for asynchronous motors. This is used to set the nominal motor voltage $U_{M,N}$ for either the star or triangle connection.		

33.111	Motor cos phi	Unit: 1	
Relationship to parameter:	Transfer status: 1	min.: 0.5 max.: 1 def.: 0	Own value (to be entered!)
	Only for asynchronous motors. The value from the motor's type plate data has to be entered here for the power factor cos phi.		

33.200	Stator inductance	Unit: H	
Relationship to parameter:	Transfer status: 1	min.: 0 max.: 1 def.: 0	Own value (to be entered!)
	For synchronous motors only. The stator inductance can be optimised here if the automatically determined value (motor identification) is insufficient.		

33.201	Nominal flux	Unit: mVs	
Relationship to parameter:	Transfer status: 1	min.: 0 max.: 10000 def.: 0	Own value (to be entered!)
	For synchronous motors only. The nominal flux can be optimised here if the automatically determined value (motor identification) is insufficient.		

5.4.2 I^2t

33.010	I^2t fact. motor	Unit: %		
Relationship to parameter: 33.031 33.011	Transfer status: 2	min.:	0	Own value (to be entered!)
		max.:	1000	
		def.:	100	
	The percentage current threshold (in relation to motor current 33.031) at the start of integration can be set here. 0 % = disable We recommend using winding protection contacts in heat-sensitive applications!			

33.011	I^2t time	Unit: s		
Relationship to parameter: 33.010	Transfer status: 2	min.:	0	Own value (to be entered!)
		max.:	1200	
		def.:	30	
	Time after which the drive controller switches off with I^2t.			

33.138	Holding current time	Unit: s		
Relationship to parameter: 33.010	Transfer status: 2	min.:	0	Own value (to be entered!)
		max.:	3600	
		def.:	2	
	Only for asynchronous motors. This is the time during which the drive is held at continuous current after the brake ramp has been completed.			

5.4.3 Switching frequency

The internal switching frequency can be changed in order to control the power element.
A high setting reduces noise in the motor but results in increased EMC emissions and losses in the drive controller.

34.030	Switching frequency	Unit: Hz		
Relationship to parameter: 33.010	Transfer status: 2	min.:	1	Own value (to be entered!)
		max.:	4	
		def.:	see data sheet	
	Selection of the switching frequency for the drive controller: 1 = 16 kHz 2 = 8 kHz 4 = 4 kHz			

5.4.4 Controller data

34.010	Control method	Unit: integer		
Relationship to parameter: 33.001 34.011	Transfer status: 2	min.:	100	Own value (to be entered!)
		max.:	201	
		def.:	100	
	Selection of the control method: 100 = open-loop asynchronous motor 200 = open-loop synchronous motor			

34.020	Flying restart	Unit:		
Relationship to parameter: 34.021	Transfer status: 2	min.:	0	Own value (to be entered!)
		max.:	1	
		def.:	1	
	This parameter can be used to activate the flying restart. 0 = disable 1 = enable			

34.021	Catch time	Unit: ms		
Relationship to parameter:	Transfer status: 2	min.:	0	Own value (to be entered!)
		max.:	10,000	
		def.:	100	
	The catch time can be optimised here, if the automatically determined results (of the motor identification) are insufficient.			

34.090	Speed controller K_p	Unit: mA / rad / s		
Relationship to parameter:	Transfer status: 2	min.:	0	Own value (to be entered!)
		max.:	10000	
		def.:	150	
	For asynchronous motors: The control boost of the speed controller can be optimised here, if the automatically determined results (of the motor identification) are insufficient. For synchronous motors: The control boost of the speed controller can be set here.			

34.091	Speed controller T_n	Unit: s		
Relationship to parameter:	Transfer status: 2	min.:	0	Own value (to be entered!)
		max.:	10	
		def.:	4	
	For asynchronous motors: The reset time of the speed controller can be optimised here, if the automatically determined results (of the motor identification) are insufficient. For synchronous motors: The reset time of the speed controller must be optimised here, we would recommend a value between 0.1 s and 0.5 s.			

34.110	Slip trimmer	Unit:		
Relationship to parameter: 5.080 33.034	Transfer status: 2	min.:	0	Own value (to be entered!)
		max.:	1.5	
		def.:	1	
	Only for asynchronous motors. This parameter can be used to optimise or deactivate slippage compensation. 0 = disable (performance as on the grid) 1 = compensation for slippage. Example: 4 pole asynchronous motor at 1410 rpm, target frequency 50 Hz Motor idling 0 = approx. 1500 rpm 1 = 1500 rpm Motor at nominal point 0 = 1410 rpm 1 = 1500 rpm 50 Hz is always displayed as the actual frequency. Deactivating slip compensation may result in stall detection no longer working reliably.			

34.130	Voltage control reserve	Unit:		
Relationship to parameter:	Transfer status: 2	min.:	0	Own value (to be entered!)
		max.:	1	
		def.:	0.95	
	Only for asynchronous motors. This parameter can be used to adjust voltage output.			

5.4.5 Quadratic characteristic curve

34.120	Quadratic characteristic curve	Unit: integer		
Relationship to parameter: 34.121	Transfer status: 2	min.:	0	Own value (to be entered!)
		max.:	1	
		def.:	0	
	Only for asynchronous motors. The quadratic characteristic curve function can be activated here. 0 = disable 1 = enable			

34.121	Flux adjustment	Unit: %		
Relationship to parameter: 34.120	Transfer status: 2	min.:	0	Own value (to be entered!)
		max.:	100	
		def.:	50	
	Only for asynchronous motors. The percentage by which the flux is to be reduced can be set here. An overvoltage shutdown can occur if there are any major changes in operation.			

5.4.6 Synchronous motor controller data

34.225	Field weakening	Unit: integer		
Relationship to parameter:	Transfer status: 2	min.:	0	Own value (to be entered!)
		max.:	1	
		def.:	0	
	For synchronous motors only. 0 = disable, the motor cannot be run in the field weakening. 1 = enable, the motor can be placed in the field weakening until the drive controller has reached its current limit or the maximum permissible electromotive force.			

34.226	Starting current	Unit: %		
Relationship to parameter: 34.227	Transfer status: 2	min.:	5	Own value (to be entered!)
		max.:	1000	
		def.:	25	
	For synchronous motors only. Here the current which was stamped in the motor before starting the control can be adjusted. Value as % of nominal motor current.			

34.227	Init time	Unit: s		
Relationship to parameter: 34.226	Transfer status: 2	min.:	0	Own value (to be entered!)
		max.:	100	
		def.:	0.25	
	For synchronous motors only. Here the time during which the start up current 34.226 is stamped can be set.			

34.228 – 34.230	Start-up procedure	Unit: integer		
Relationship to parameter:	Transfer status: 2	min.:	0	Own value (to be entered!)
		max.:	1	
		def.:	0	
	For synchronous motors only. By changing the start-up procedure to “Controlled”, higher starting torques can be achieved. 0 = regulated, the drive controller directly to the control after the stamping phase. 1 = controlled, after the stamping phase the rotation field is increased by the control with start ramp 34.229 up to start frequency 34.230, then switched to the controller.			

36.020	Deact grid monitoring	Unit: integer		
Relationship to parameter:	Transfer status: 2	min.:	0	Own value (to be entered!)
		max.:	1	
		def.:	0	
	(V 03.84 and higher) Grid monitoring can be deactivated here. 0: deactivated 1: activated			

6. Error detection and troubleshooting

This chapter contains the following:

- a list of the LED flash codes for error recognition
- a description of error recognition using PC tools
- a list of errors and system errors
- notes on error detection with the MMI

⚠ DANGER!

Risk of death due to electrical shock!
Death or serious injury!
De-energise drive controller and secure it against being restarted.
If damaged parts or components need replacing, only ever replace with original parts.

⚠ DANGER!

Danger due to electrical shock and discharge. Wait two minutes (discharge time of the capacitors) after shut-down.

6.1 List of the LED flash codes for error recognition

When an error occurs, the LEDs on the drive controller display a flashing code that allows the errors to be diagnosed.

The following table contains an overview:

Red LED	Green LED	State
✳	○	Boot loader active (flashing in turn)
○	✳	Ready for operation (activate En_HW for operation)
○	●	Operation / ready
✳	●	Warning
●	○	Error
●	●	Identification of motor data
○	⁘	Initialisation
⁘	⁘	Firmware update
⁘	●	Bus error operation
⁘	✳	Bus error ready for operation

Tab. 17: LED flash codes

Key			
○	LED off	●	LED on
✳	LED flashing	⁘	LED flashing quickly

6.2 List of errors and system errors

The driver controller shuts down if an error occurs. Consult the flash code table / PC tool for the corresponding error numbers.

NOTICE

Error messages can only be acknowledged once the error has been remedied.

Error messages can be acknowledged as follows:

- digital input (can be programmed)
- using MMI (handheld controller)
- Automatic acknowledgement function (Parameter 1.181)
- switch device off and on again

via fieldbus (CANOpen, Profibus DP, EtherCAT)

NOTICE

Errors must always be rectified before acknowledgement, otherwise the drive controller may be damaged.

The following section contains a list of possible error messages.
Please contact the KOSTAL service department if you encounter errors that are not listed here.

No.	Error name	Description of error	Possible causes/remedy
1	Undervoltage 24 V application	Supply voltage for the application is less than 15 V	24 V supply overload
2	Overvoltage 24 V application	Supply voltage for the application is greater than 31 V	Internal 24 V supply is not OK or external supply is not OK
4	Warning: Customer PLC runtime environment	The customer PLC is not running	The customer PLC is being downloaded / The customer PLC has a programming error, e.g. division by 0
6	Customer PLC version error	The version of the customer PLC doesn't match the device firmware	Check the version numbers of the customer PLC and device firmware
8	Communication application<>power	Internal communication between the application plate and the power-conducting plate is not OK	EMC interference
10	Parameter distributor	The internal distribution of parameters during initialisation failed	Parameter set is incomplete
11	Time-out power	The power part does not respond	Operation with 24 V without mains feed-in
13	Cable break at analogue in1 (4–20 mA / 2–10 V)	Current or voltage is less than the lower limit of analogue input 1 (monitoring for this error is activated automatically by setting parameter 4.021 to 20 %).	Cable break, faulty external sensor
14	Cable break at analogue in 2 (4–20 mA / 2–10 V)	Current or voltage is less than the lower limit of analogue input 2 (monitoring for this error is activated automatically by setting parameter 4.021 to 20 %)	Cable break, faulty external sensor
15	Blocking detection	The drive shaft of the motor is stalled. 5,080	Remove the blockage
16	PID dry run	No PID actual value despite maximum speed	PID actual value sensor defective. Extend dry run time parameter 3.072

Continues on next page

Continuation

No.	Error name	Description of error	Possible causes/remedy
17	Start-up error	Motor not starting up or starting up incorrectly. 5,082	Check motor connections/check motor and controller parameters; if necessary, disable error (5.082).
18	Excess temperature for FC application	Inner temperature too high	Insufficient cooling, low motor speed and high torque, switching frequency too high.
19	Firmware update error	A firmware update could not be completed	Disconnection during a firmware update. Repeat the firmware update The INVEOR is supplied externally with 24V. Note: During a firmware update, no external 24V may be connected.
21	Bus time-out	Bus communication abort, the bus timeout time (6.062) no telegrams were received.	Check external wiring. Check fieldbus communication. Increase bus timeout time.
21	Bus time-out	No response from bus sharing unit or MMI/PC	Check bus wiring
22	Acknowledgement error	The number of maximum automatic acknowledgements (1.182) was exceeded	Check error history and remedy error
23	External fault 1	The parameterised fault input is active. 5,010	Correct the external fault
24	External fault 2	The parameterised fault input is active. 5,011	Correct the external fault
25	Motor detection	Motor identification error	Check INVEOR/motor and PC / MMI / INVEOR connections / restart motor identification
26	STO inputs plausibility	The statuses of the two STO inputs have not been identical for more than 2 sec.	Incorrect activation of the STO inputs. Check corresponding external wiring.
28	Limit frequency exceeded / not met	The parameterised minimum / maximum frequency has not been met / has been exceeded.	The parameterised time 5.085 or 5.086 is too short / Motor blocked / Brake not opened / Motor overloaded
32	Trip IGBT **	Protection of the IGBT module against overcurrent has been triggered	Short circuit in the motor or motor feed line / controller settings
33	Overvoltage of intermediate circuit **	The maximum intermediate circuit voltage has been exceeded	Feedback by motor in generator mode / mains voltage too high / faulty setting for rotation speed controller / brake resistor not connected or defective / ramp times too short
34	Undervoltage of intermediate circuit	The minimum intermediate circuit voltage has not been reached	Mains voltage too low, mains connection defective / check wiring
35	Excess motor temperature	Motor PTC has been triggered	Overload of the motor (e.g. high torque at low motor speed) / ambient temperature too high
36	Power failure	The grid voltage has dropped briefly	Grid fluctuation / grid voltage interrupted
38	Excess IGBT module temperature	Excess IGBT module temperature	Insufficient cooling, low motor speed and high torque, switching frequency too high
39	Overcurrent **	Maximum output current of drive controller exceeded	Motor stalled / check motor connection / incorrect speed controller setting / check motor parameters / ramp times too short / brake not open

Continues on next page

Continuation

No.	Error name	Description of error	Possible causes/remedy
40	Excess frequency converter temperature	Inner temperature too high	Insufficient cooling / low motor speed and high torque / switching frequency too high permanent overload / reduce ambient temperature / check fan
42	I^2t motor protection shut-off	The internal I^2t motor protection (can be parametrised) has been triggered	Permanent overload
43	Ground leak **	Ground leak during a motor phase	Insulation fault
45	Motor connection disrupted	No motor current in spite of control through frequency converter	No motor connected or not completely connected. Check phases or motor connections and connect correctly when necessary. *
46	Motor parameters	Plausibility check for motor parameters failed	Parameter set not OK
47	Drive controller parameters	Plausibility check for drive controller parameters failed	Parameter set not OK, motor type 33.001 and control method 34.010 not plausible.
48	Type plate data	No motor data entered	Please enter the motor data according to the type plate
49	Power class restriction	Max. overload of the drive controller exceeded for more than 60 sec.	Check application / reduce load / use larger drive controller.
53	Motor tipped	Only for synchronous motors, field orientation lost	Load too high. Optimise controller parameters.

Tab. 18: Error detection

* In exceptional cases, the error may be displayed erroneously for idling (very low motor current) synchronous motors.
Set parameter 33.016 accordingly when the phases or motor connections are connected correctly.

** Should the error occur again, depending on frequency, it can only be acknowledged after the following times:

1 -3	acknowledgements permitted =	1	s waiting time
4 -5	acknowledgements permitted =	5	s waiting time
> 5	acknowledgements permitted =	30	s waiting time

The number of acknowledgements is deleted after 120 s <u>without any</u> errors!

7. Disassembly and disposal

This chapter contains the following:

- a description of how to disassemble the drive controller
- information on correct disposal

7.1 Drive controller disassembly

⚠ DANGER!

Risk of death due to electrical shock!

Death or serious injury!

De-energise drive controller and secure it against being restarted.

⚠ DANGER!

Danger due to electrical shock and discharge. Wait two minutes (discharge time of the capacitors) after shut-down.

1. Open drive controller cover.
2. Release cables at terminals.
3. Remove all cables.
4. Remove connection screws for drive controller / adapter plate.
5. Remove drive controller.

7.2 Information on correct disposal

Dispose of drive controller, packaging and replaced parts in accordance with the regulations of the country in which the drive controller has been installed.
The drive controller may not be disposed of with household waste.

8. Technical data

8.1 General data

8.1.1 General technical data for 400V devices

	Size	A				B			C		D			
Electrical data	Recommended motor rating [1] [kW]	0.55	0.75	1.1	1.5	2.2	3.0	4.0	5.5	7.5	11.0	15.0	18.5	22.0
	Supply voltage	3 x 200 V AC -10 %...480 V AC +10 % 280 V DC -10 %...680 V DC +10 % [4]												
	Grid frequency	50/60 Hz ± 6 %												
	Network configurations	TN / TT												
	Line current [A]	1.4	1.9	2.6	3.3	4.6	6.2	7.9	10.8	14.8	23.2	28.2	33.2	39.8
	Rated current output eff. [IN at 8 kHz]	1.7	2.3	3.1	4.0	5.6	7.5	9.5	13.0	17.8	28.0	34.0	40.0	48.0
	Min. brake resistance [Ω]	100				50			50		30			
	Overload for 60 sec. in %	150												130
	Switching frequency	4 kHz, 8 kHz, 16 kHz, (factory setting 8 kHz)									4 kHz - 16 kHz, (factory setting 4 kHz)			
	Output frequency	0 Hz - 400 Hz												
	Nominal output apparent power [kVA]	1.06	1.43	1.93	2.49	3.49	4.68	5.92	8.11	11.1	17.46	21.20	24.94	29.93
	Mains cycles of operation / restart										2 min.			
	DIN EN 61800-5 touch current	< 3,5 mA [2]												
Functions	Protective function	Overvoltage and undervoltage, I^2t restriction, short-circuit, ground leak, motor and drive controller temperature, stall prevention, blocking detection, PID dry run protection												
	Software functions	Process control (PID controller), fixed frequencies, data record changeover, flying restart, motor current limit												
	Soft PLC	IEC61131-3, FBD, ST, AWL												
Mechanical data	Housing	Two-part aluminium die-cast casing												
	Dimensions [L x W x H] inch (mm)	9.17 x 15.3 x 4.72 (233 x 153 x 120)				10.63 x 7.44 x 5.51 (270 x 189 x 140)			12.09 x 8.78 x 7.13 (307 x 223 x 181)		16.3 x 11.57 x 9.13 (414 x 294 x 232)			
	Weight including adapter plate	3.9 kg				5.0 kg			8.7 kg		21.0 kg			
	Protection class [IPxy]	IP 65									IP 55			
	Cooling	Passive cooling									Active cooling			
Environmental conditions	Ambient temperature	-40 °F (- 40 °C) (non-condensing) to 120 °F (+ 50 °C) (without derating)									-40 °F (- 40 °C) bis 120 °F (+50 °C) (8 kHz)		-40 °F (- 40 °C) bis 120 °F (+50 °C) (4 kHz)	
	Storage temperature	–40 °C…+85 °C												
	Altitude of the installation location	up to 3280 ft (1000 m) above sea level/over 3280 ft (1000 m) with reduced performance (1% per 328 ft (100 m)) / above 6561 ft (2000 m) see chapter 8.2.2												
	Relative air humidity	≤ 96 %, condensation not permitted												
	Vibration resistance (DIN EN 60068-2-6)	50 m/s²; 5…200 Hz [3]												
	Shock resistance (DIN EN 60068-2-27)	300 m/s²												
	EMC (DIN-EN-61800-3)	C2												
	Energy efficiency class (EN 61800-9-2)	IE2												

Technical data for INVEOR M 400 V devices (subject to technical changes)

[1] Recommended motor rating (4-pole asynchronous motor) is specified based on the 400 VAC supply voltage.

[2] With 1LA7 asynchronous motor, motor-mounted

[3] Combined vibration test, part 4, severity 2 in accordance with FN942017

[4] In compliance with the overvoltage category

[5] < 3 s may result in power failure/intermediate circuit undervoltage faults

8.1.2 General technical data for 230 V devices

	Size	A				
Electrical data	Recommended motor rating [1] [kW]	0.37	0.55	0.75	1.1	1.5
	Supply voltage	1 x 100 V AC -15 %...230 V AC +10 % 140 VDC - -15 %...320 VDC + +10 %				
	Grid frequency	50/60 Hz ± 6 %				
	Network configurations	TN / TT				
	Line current [A]	4.5	5.6	6.9	9.2	13.2
	Rated current output eff. [IN at 8 kHz]	2.3	3.2	3.9	5.2	7
	Min. brake resistance [Ω]	50				
	Overload for 60 sec. in %	150				125
	Switching frequency	4 kHz, 8 kHz, 16 kHz, (factory setting 8 kHz)				
	Output frequency	0 Hz – 400 Hz				
	Mains cycles of operation / restart	Every 2 min.				
	DIN EN 61800-5 touch current	< 10 mA [2]				
Functions	Protective function	Overvoltage and undervoltage, I^2t restriction, short-circuit, ground leak, motor and drive controller temperature, stall prevention, blocking detection, PID dry run protection				
	Software functions	Process control (PID controller), fixed frequencies, data record changeover, flying restart, motor current limit				
	Soft PLC	IEC61131-3, FBD, ST, AWL				
Mechanical data	Housing	Two-part aluminium die-cast casing				
	Dimensions [L x W x H] inch (mm)	9.17 x 6.02 x 4.72 (233 x 153 x 120)				
	Weight including adapter plate	3.9 kg				
	Protection class [IPxy]	IP 65				
	Cooling	Passive cooling				Active internal cooling
Environmental conditions	Ambient temperature	14 °F(-10 °C) (non-condensing) to 104 °F(+40 °C) (122 °F (50 °C with derating))				up to 95 °F/104 °F (35 °C/ 40 °C) [4]
	Storage temperature	–25 °C…+85 °C				
	Altitude of the installation location	up to 3280 ft (1000 m) above sea level/over 3280 ft (1000 m) with reduced performance (1% per 328 ft (100 m)) / above 6561 ft (2000 m) see chapter 8.2.2				
	Relative air humidity	≤ 96 %, condensation not permitted				
	Vibration resistance (DIN EN 60068-2-6)	50 m/s²; 5…200 Hz [3]				10 m/s² 5…200 Hz [3]
	Shock resistance (DIN EN 60068-2-27)	300 m/s²				100 m/s²
	EMC (DIN-EN-61800-3)	C1				

Technical data for INVEOR M 230 V devices (subject to technical changes)

[1] Recommended motor rating (4-pole asynchronous motor) is specified based on the 230 VAC supply voltage.

[2] With 1LA7 asynchronous motor, motor-mounted

[3] Combined vibration test, part 4, severity 2 in accordance with FN942017

[4] For 40 m³/h / 60 m³/h cooling air flow

8.1.3 Specification of interfaces

Designation	Function
Digital inputs 1 – 4	- Switching level low < 2 V / high > 18 V - Imax (at 24 V) = 3 mA - Rin = 8.6 kOhm
Hardware approval for input	- Switching level low < 3 V / high > 18 V Imax (at 24 V) = 8 mA
Analogue inputs 1, 2	- In +/- 10 V or 0 – 20 mA - In 2 – 10 V or 4 – 20 mA - 10-bit resolution - Tolerance +/- 2 % Voltage input: - Rin = 10 kOhm Current input: - Working resistance = 500 Ohm
Digital outputs 1, 2	- Short-circuit proof - Imax = 20 mA
Relays 1, 2	1 changeover contact (NO/NC) Maximum switching power * - at ohmic load (cos $\varphi = 1$): 5 A at ~ 230 V or = 30 V - at inductive load (cos $\varphi = 0.4$ and L/R = 7 ms): 2 A at ~ 230 V or = 30 V Maximum reaction time: 7 ms ± 0.5 ms Electric life: 100 000 switching cycles
Analogue output 1 (current)	- Short-circuit proof - I out = 0.. 20 mA - Working resistance = 500 Ohm - Tolerance +/- 2 %
Analogue output 1 (voltage)	- Short-circuit proof - Uout = 0..10 V - Imax = 10 mA - Tolerance +/- 2 %
Power supply 24 V	- Auxiliary voltage U = 24 V DC - SELV - Short-circuit proof - Imax = 100 mA - external feeding of 24 V possible
Power supply 10 V	- Auxiliary voltage U = 10 V DC - Short-circuit proof - Imax = 30 mA

Tab. 19: Specification of interfaces

* in terms of the UL 508C standard, the maximum allowed is 2 A!

8.1.4 Power loss table

INVEOR M Variant	Supply voltage [V]	Rated output current [A]	Measurement (90; 100)	Measurement (50; 100)	Measurement (10; 100)	Measurement (90; 50)	Measurement (50; 50)	Measurement (10; 50)	Measurement (50; 25)	Measurement (10; 25)	Standby losses [W]	IE –class
			Power loss absolute [W] 1) 2)									
			Losses relative [%]1) 2) 3)									
Size A 0,55 kW	400	1,7	20	19	21	19	17	18	16	18	5	IE2
			1,9	1,8	2	1,8	1,6	1,7	1,5	1,7		
Size A 0,75 kW	400	2,3	26	25	26	19	19	21	19	20	5	IE2
			1,8	1,8	1,8	1,3	1,3	1,4	1,3	1,4		
Size A 1,1 kW	400	3,1	33	33	32	24	26	25	19	21	5	IE2
			1,7	1,7	1,6	1,3	1,4	1,3	1	1,1		
Size A 1,5 kW	400	4,0	45	38	41	29	31	30	32	26	5	IE2
			1,8	1,5	1,6	1,2	1,2	1,2	1,3	1		
Size B 2,2 kW	400	5,6	58	55	56	42	40	42	32	37	5	IE2
			1,7	1,6	1,6	1,2	1,1	1,2	0,9	1		
Size B 3,0 kW	400	7,5	81	87	71	54	53	52	43	46	5	IE2
			1,7	1,9	1,5	1,2	1,1	1,1	0,9	1		
Size B 4,0 kW	400	9,5	103	96	94	67	62	64	53	53	5	IE2
			1,7	1,6	1,6	1,1	1	1,1	0,9	0,9		
Baugröße C 5,5 kW	400	13,0	153	125	123	77	73	73	53	58	5	IE2
			1,9	1,5	1,5	0,9	0,9	0,9	0,7	0,7		
Size C 7,5 kW	400	17,8	233	187	171	104	95	95	74	81	5	IE2
			2,1	1,7	1,5	0,9	0,9	0,9	0,7	0,7		
Size D 11,0 kW	400	28,0	268	234	242	152	140	150	107	116	13	IE2
			1,5	1,3	1,4	0,9	0,8	0,9	0,6	0,7		
Size D 15,0 kW	400	34,0	339	293	297	185	165	174	123	133	13	IE2
			1,6	1,4	1,4	0,9	0,8	0,8	0,6	0,6		
Size D 18,5 kW	400	40,0	407	347	347	212	189	200	135	147	13	IE2
			1,6	1,4	1,4	0,9	0,8	0,8	0,5	0,6		
Size D 22,0 kW	400	48,0	526	448	448	262	237	248	172	183	13	IE2
			1,8	1,5	1,5	0,9	0,8	0,8	0,6	0,6		

1) **Loss values at 4 kHz switching frequency**
2) Loss values include a 10% surcharge according to the guideline
3) Relative losses based on the nominal apparent output power of the device

8.2 Derating of output power

Drive controllers of the INVEOR series have two integrated PTC resistors as standard which monitor both the heat sink temperature and the inner temperature. As soon as a permissible IGBT temperature of 95°C or a permissible inner temperature of 85°C is exceeded, the drive controller shuts down.

With the exception of the 22kW controller (size D 130%), all INVEOR type drive controllers are designed for an overload of 150% for 60sec (every 10 min).

Reductions in the ability to handle overload and/or its duration should be taken into account in the following circumstances:

- A switching frequency permanently set too high >8 kHz (load-dependent).
- A permanently increased heat sink temperature, caused by a blocked air flow or a thermal blockage (dirty cooling ribs).
- Depending on the type of assembly, permanently excessive ambient temperature.

The respective max. output values can be determined from the following characteristic curves.

8.2.1 Derating due to increased ambient temperature

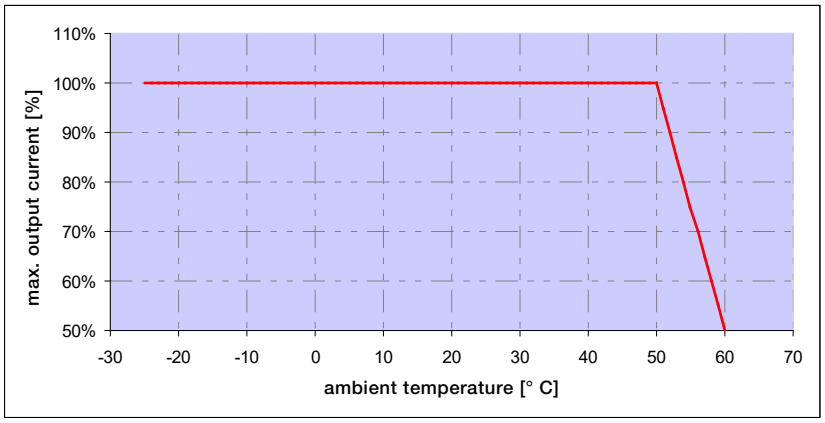

Fig. 40: Derating for drive controller fitted on motor (all sizes)

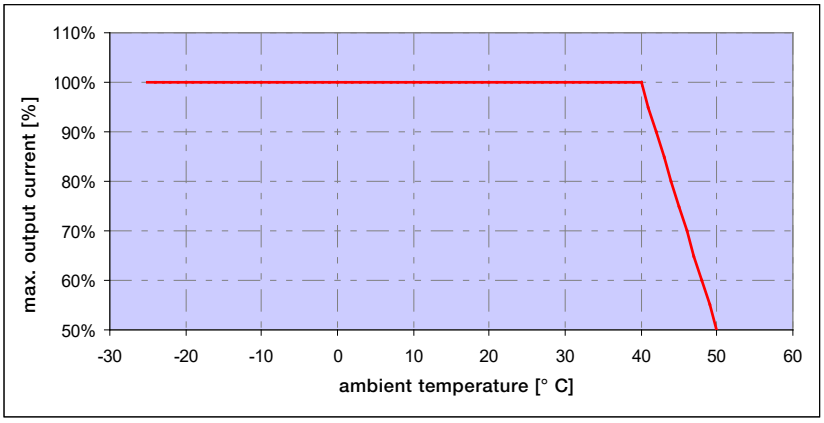

Fig. 41: Derating for drive controller fitted on wall (sizes A - C)

Continues on next page

Continuation

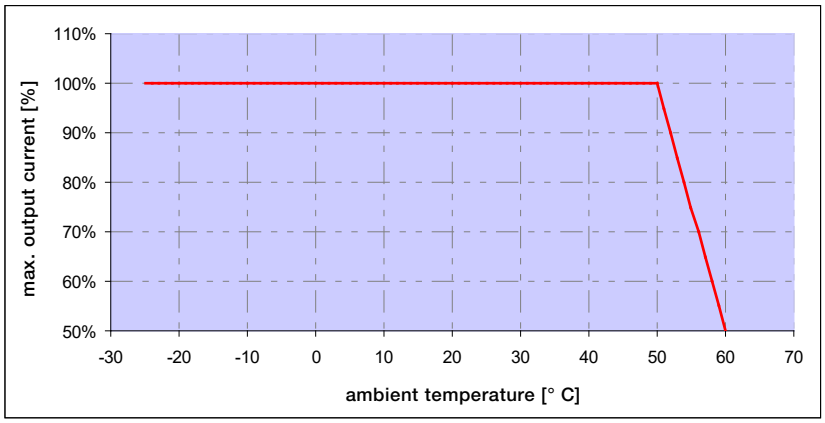

Fig. 42: Derating for wall-mounted drive controller (size D with fan option)

8.2.2 Derating due to installation altitude

The following applies to all INVEOR drive controllers:

- No reduction in performance is needed in S1 mode up to 1000m above sea level.
- A reduction in performance of 1% every 100 m is needed from 1000m ≥ 2000m. Overvoltage category 3 is observed!
- Overvoltage category 2 should be observed from 6561ft ≥ 13123 ft (2000 m ≥ 4000 m) because of the lower air pressure!

In order to observe the overvoltage category:

- use external overvoltage protection in the INVEOR's mains cable.
- reduce the input voltage.

Please contact the KOSTAL Service department.

The respective max. output values can be determined from the following characteristic curves.

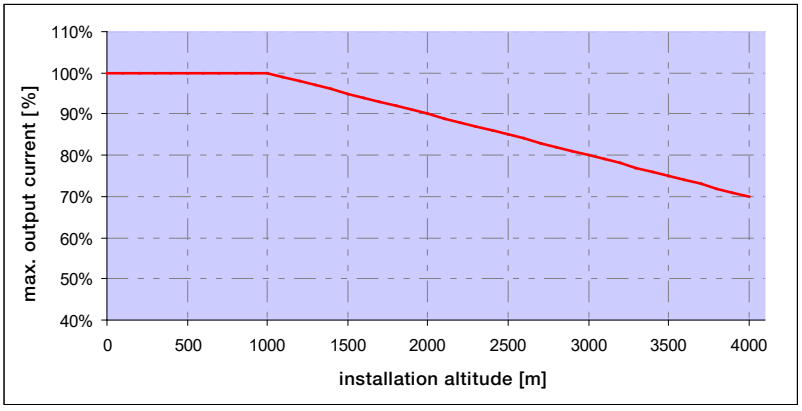

Fig. 43: Derating of maximum output current as a result of installation altitude

Continues on next page

Continuation

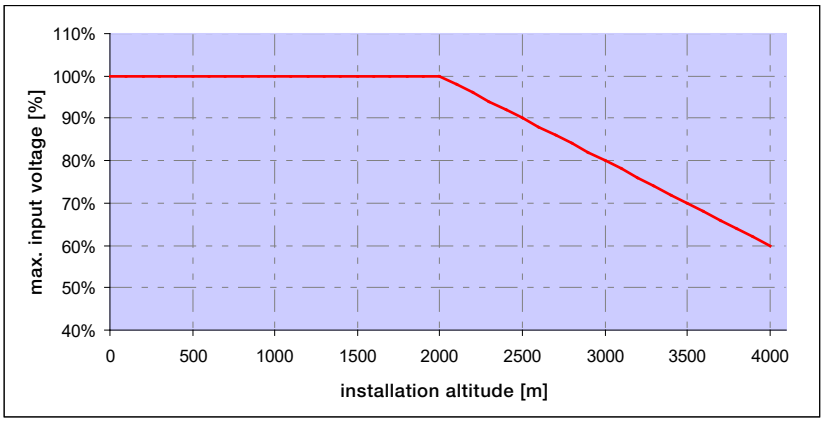

Fig. 44: Derating of maximum input voltage as a result of installation altitude

8.2.3 Derating due to switching frequency

The following diagram shows the output current, depending on switching frequency. To limit the thermal losses in the drive controller, the output current must be reduced.

Note: The switching frequency is not reduced automatically!

The max. output values can be determined from the following characteristic curve.

INVEOR M BG. A – D (0.37 kW – 15 kW)

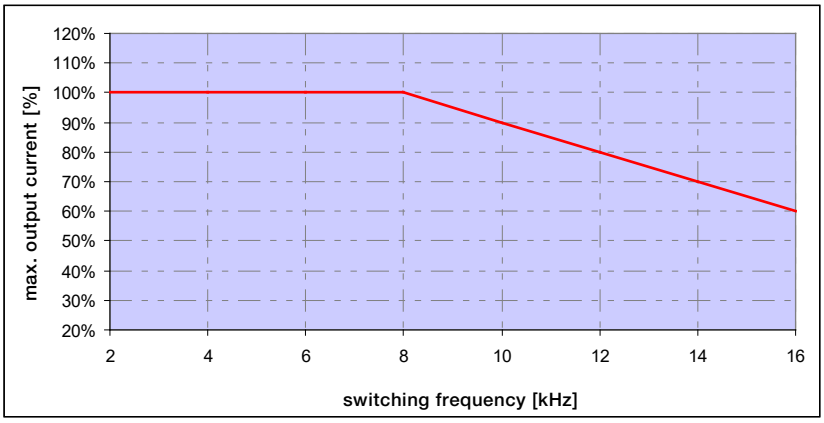

Fig. 45: Derating of maximum output current as a result of switching frequency (0.37 kW – 15 kW)

Continues on next page

Continuation

INVEOR M BG. D (18.5 kW)

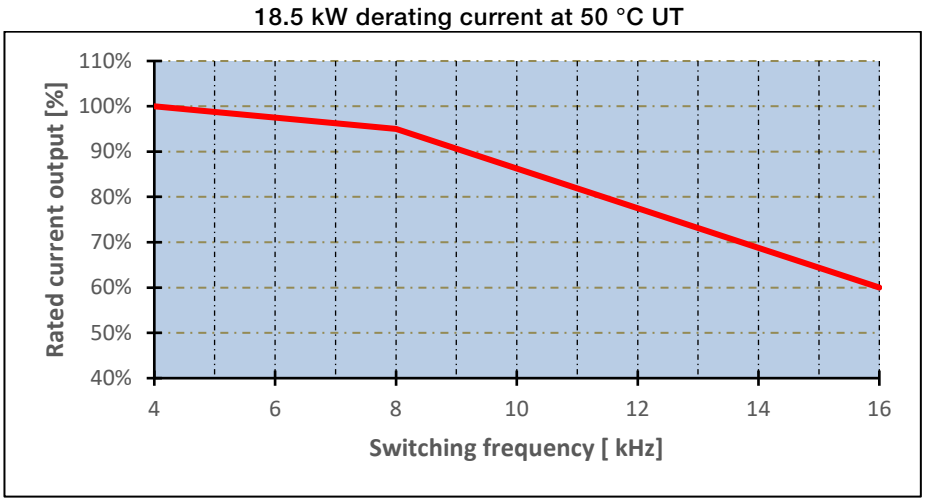

Fig. 46: Derating of the maximum output current due to the clock frequency (Variant 18.5 kW)

INVEOR M BG. D (22 kW)

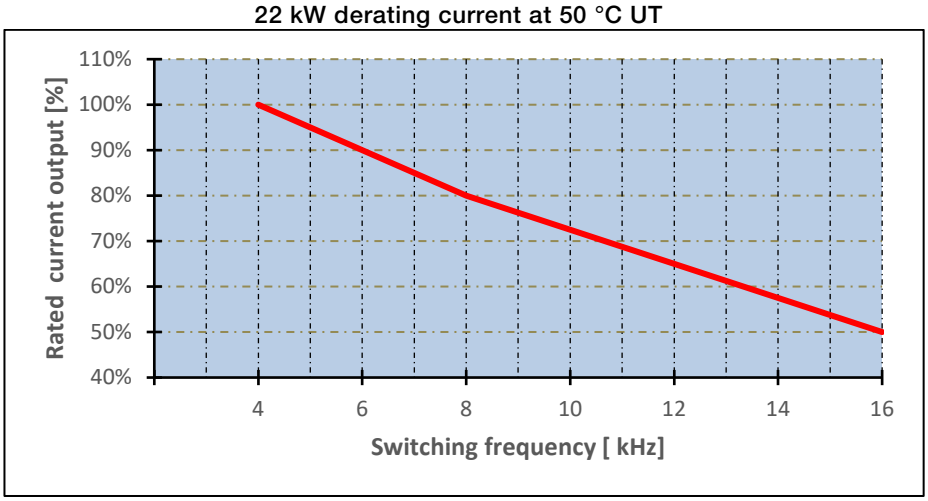

Fig. 47: Derating of the maximum output current due to the clock frequency (Variant 22 kW)

9. Optional accessories

This chapter contains brief descriptions of the following optional accessories

- Adapter plates
- MMI handheld controller including connection cable RJ9 on M12 plug
- Brake resistors

9.1 Adapter plates

9.1.1 Motor adapter plates

A standard motor adapter plate (with an integrated terminal board for size A up to C) is available for each INVEOR size. Download the 3D files (.stp) for INVEOR and adapter plates from
www.kostal-industrie-elektrik.com/downloads

INVEOR size	A	B	C	D
Power [kW]	0.55 to 1.5	2.2 to 4.0	5.5 to 7.5	11.0 to 22.0
Designation	ADP MA MOT 0000 A00 000 1	ADP MB MOT 0000 A00 000 1	ADP MC MOT 0000 A00 000 1	ADP MD MOT 0000 A00 000 1
Part no.	10108906	10026184	10025632	10098202

The customer needs to drill the four holes for mounting the standard adapter plate on the motor. Below are technical drawings showing the possible locations of the holes for each of the respective sizes.

NOTICE

The following applies to size D INVEOR drive controllers:

An additional support is not necessarily needed in industrial use.
In the event of more stringent vibration requirements, it may be necessary for an additional support to be provided on the B side of the motor.

For help with project planning, please contact the KOSTAL Sales department.

NOTICE

The system integrator is responsible for whether the connection between the motor and adapter plate satisfies the mechanical requirements of the application.

Because the motor does not form part of the scope of supply of the drive controller, the system integrator must ensure the following when assembling the drive controller on the motor.

- Actual dimensions of the attachment interface
- Blind hole depth, diameter and thread type of attachment points

NOTICE

- KOSTAL Industrie Elektrik GmbH assumes no liability for the connection between the motor and INVEOR!

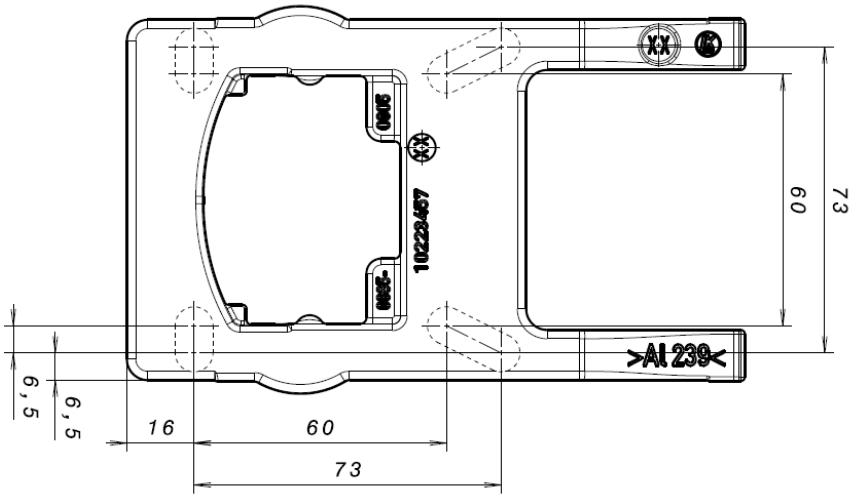

Fig. 48: Hole pattern for size A standard adapter plate

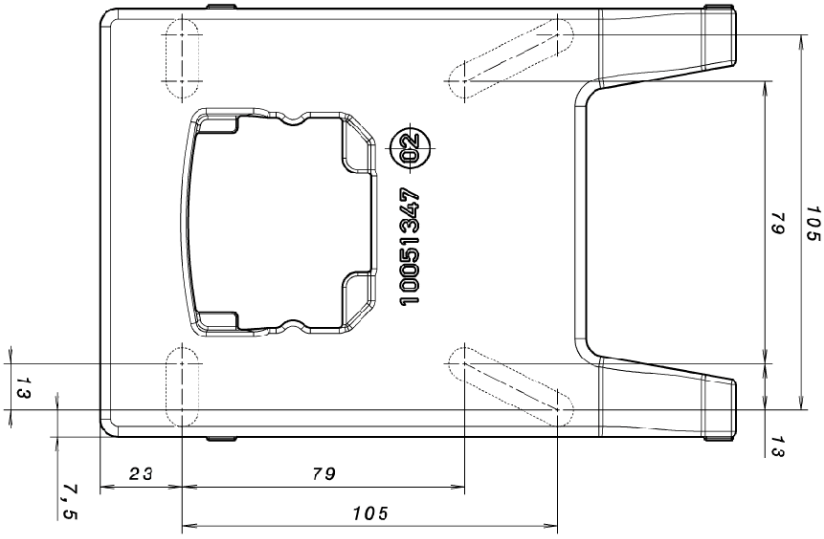

Fig. 49: Hole pattern for size B standard adapter plate

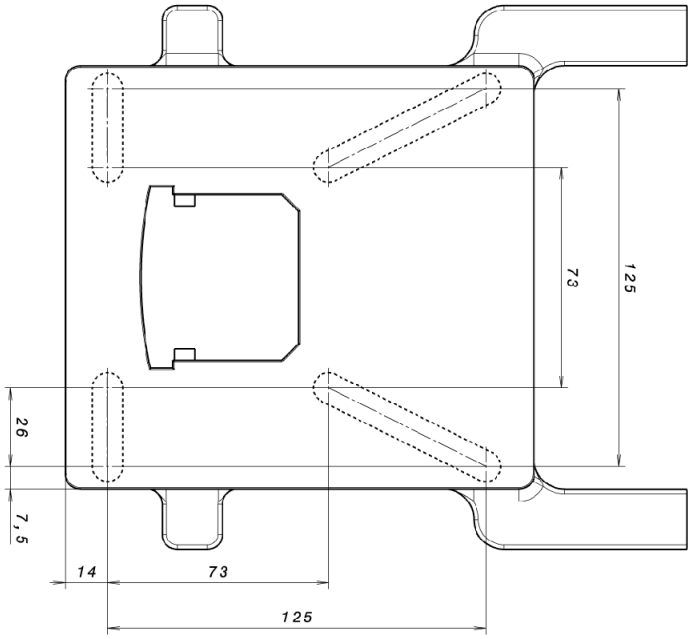

Fig. 50: Hole pattern for size C standard adapter plate

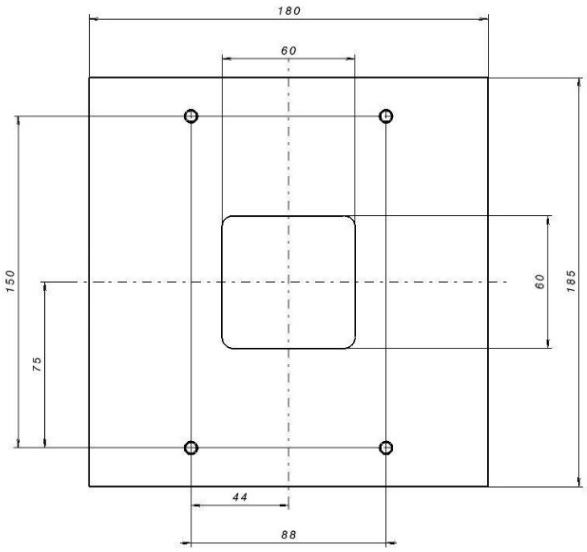

Fig. 51: Hole pattern for size D standard adapter plate

When using cylindrical head screws (cf. DIN 912 / DIN 6912) or flat head screws (cf. DIN EN ISO 7380), the hole pattern must be drilled on the INVEOR mounting frame in compliance with the applicable drawing. The drill-hole centres should be on the respective centre lines of the slots illustrated.

If the mounting frame is to be attached to a connection box that has no square hole pattern, then the drawing's diagonal centre lines are decisive.

If the mounting holes are outside the positions indicated, countersunk screws must be used to avoid fouling the attachment of the INVEOR.

If the existing flat seals are in a good condition, they should be reused.

9.1.2 Motor adapter plates (specific)

In addition to the standard motor adapter plates (with integrated terminal boards for sizes A to C), there are also specific versions available for various motor suppliers (on request).

NOTICE

The system integrator is responsible for whether the connection between the motor and adapter plate satisfies the mechanical requirements of the application.

Because the motor does not form part of the scope of supply of the drive controller, the system integrator must ensure the following when assembling the drive controller on the motor.

- Actual dimensions of the attachment interface
- Blind hole depth, diameter and thread type of attachment points

9.1.3 Wall adapter plates (standard)

A standard wall adapter plate (with an integrated terminal board for sizes A to C) is available for each INVEOR size. Download the 3D files for INVEOR and adapter plates from
www.kostal-industrie-elektrik.com/downloads
Four holes for mounting the adapter plate, as well as an EMC screw connection, are already featured.

INVEOR size	A	B	C	D
Power [kW]	0.55 to 1.5	2.2 to 4.0	5.5 to 7.5	11.0 to 22.0
Designation	ADP MA WDM 0000 A00 000 1	ADP MB WDM 0000 A00 000 1	ADP MC WDM 0000 A00 000 1	ADP MD WDM 0000 A00 000 1
Art. no.	10023107	10026185	10025932	10098170

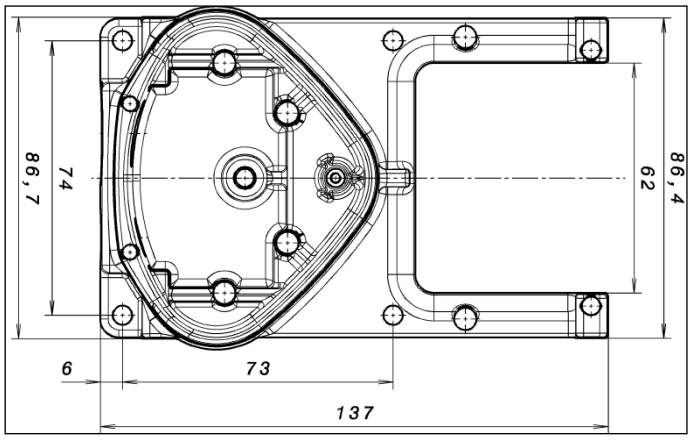

Fig. 52: Hole pattern for size A standard wall adapter plate

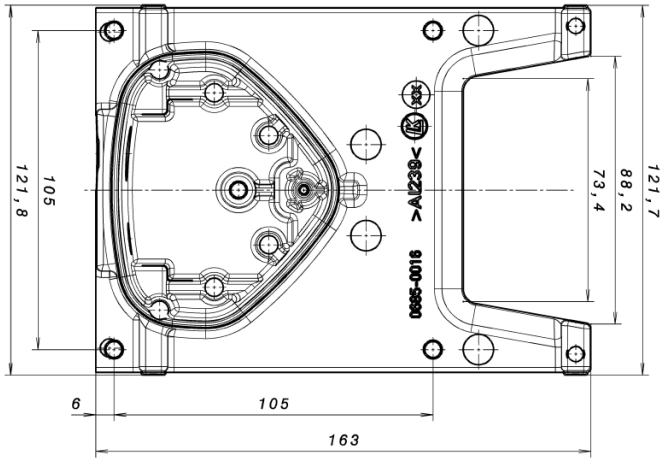

Fig. 53: Hole pattern for size B standard wall adapter plate

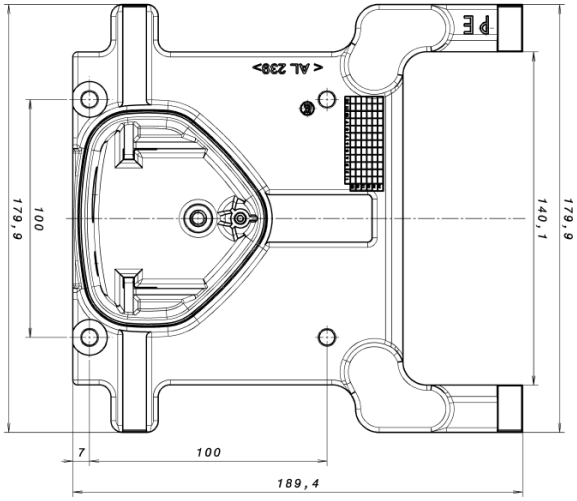

Fig. 54: Hole pattern for size C standard wall adapter plate

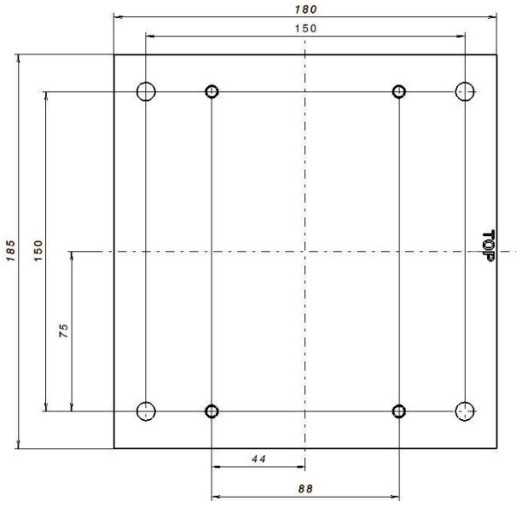

Fig. 55: Hole pattern for size D standard wall adapter plate

9.2 Foil keypad

As an option, the devices of the INVEOR family are also available as a variant with an integrated foil keypad.
This keypad can be used to operate the drive controller locally.

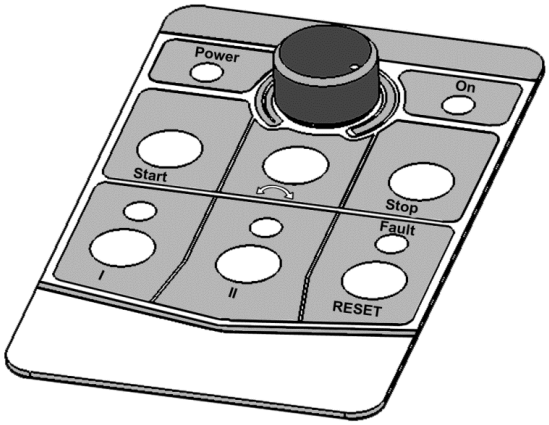

Fig. 56: Standard foil keypad

The following functionalities can be realised using the integrated foil keypad:

- Target value specification: A target value (parameter 1.130) can be specified using the potentiometer integrated in the foil keypad (select internal potentiometer).
- Target value approval: The start and stop keys integrated in the foil keypad (select foil keypad) can be used to approve the drive software (parameter 1.131).

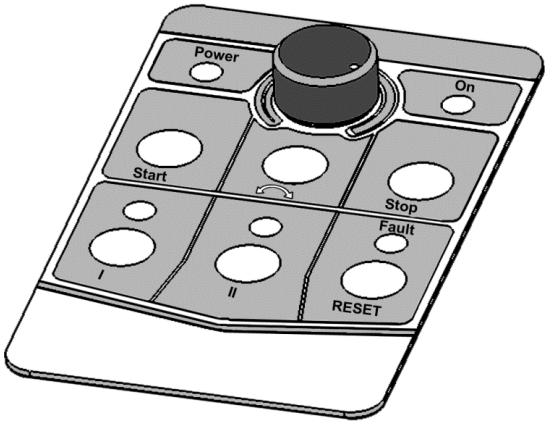

- Direction of rotation V1: The direction of rotation (parameter 1.150) can be changed using the key integrated in the foil keypad (select foil keypad, direction of rotation key).
  The direction of rotation can only be changed when the motor is running.

  Direction of rotation V2: The direction of rotation (parameter 1.150) can be changed using keys I and II integrated in the foil keypad (select foil keypad, key I clockwise/key II anti-clockwise via stop).
  The direction of rotation can only be changed when the motor is stationary.
  The integrated LEDs indicate the current direction of rotation.

  Direction of rotation V3: The direction of rotation (parameter 1.150) can be changed using keys I and II integrated in the foil keypad (select foil keypad, key I clockwise/key II anti-clockwise always).
  The direction of rotation can be changed when the motor is running and stationary.
  The integrated LEDs indicate the current direction of rotation.

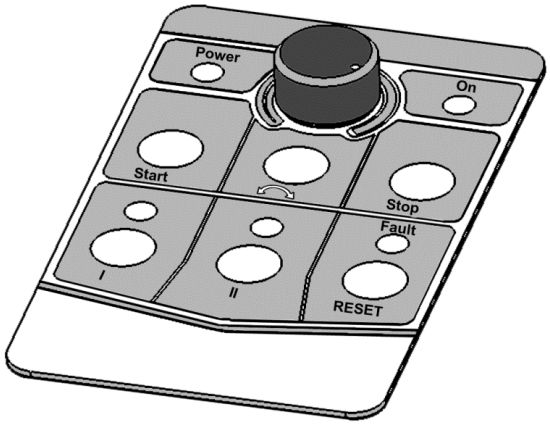

- Acknowledgement function: An error can be acknowledged (parameter 1.180) using the reset key integrated in the foil keypad (select foil keypad).
- Motor potentiometer: A motor potentiometer (parameter 2.150) can be realised using the configurable keys I and II integrated in the foil keypad (MOP digit.inp.).
  This function can be used to increase or decrease the target value.
  The integrated LEDs indicate when the minimum/maximum target value is reached.

  To activate this function, the target value specification (parameter 1.130) must be set to motor potentiometer!

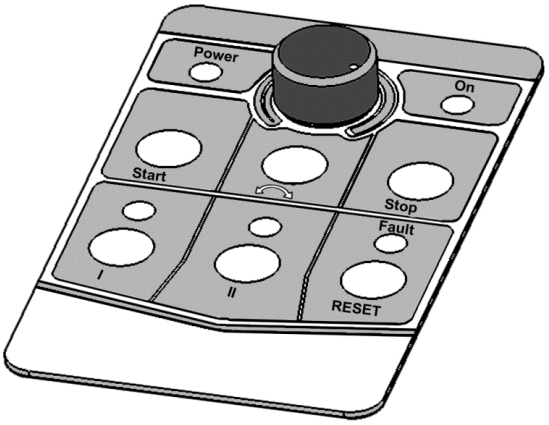

- Fixed frequency: Two fixed frequencies (parameter 2.050) can be realised using the configurable keys I and II integrated in the foil keypad (MOP digit.inp.). This function can be used to increase or decrease the target value.
  The integrated LEDs indicate the target value currently selected.

The LEDs integrated in the foil keypad provide a general indication of the drive controllers.

Power LED:	Lights up as soon as there is a voltage supply.
On LED:	Lights up during operation.
Fault LED:	Lights up when there is an error. Flashes as soon as an error can be acknowledged.

NOTICE

- To set parameters for these functions, you need PC software version 01.17 or higher.

9.3 MMI handheld controller including a 3 m RJ9 connection cable with M12 plug

NOTICE

The MMI handheld controller (part. no. 10004768) may only ever be used with an INVEOR!

The MMI handheld controller is connected to the integrated INVEOR M12 interface. This operating unit allows the user to write (program) and/or to visualise all the parameters of the INVEOR. Up to 8 complete data sets can be stored in an MMI and copied to other INVEORs.
Complete commissioning is possible as an alternative to the free INVERTERpc software.
External signals are not needed.

9.4 PC communication cable USB on M12/RS485 plug (converter integrated)

As an alternative to the MMI handheld controller, an INVEOR can also be put into operation using the PC communication cable (art no. 10023950) and the INVERTERpc software. The INVERTERpc software is available free of charge from the KOSTAL homepage at
www.kostal-industrie-elektrik.com/downloads/downloadmanager#Antriebstechnik

9.5 Bluetooth stick M12

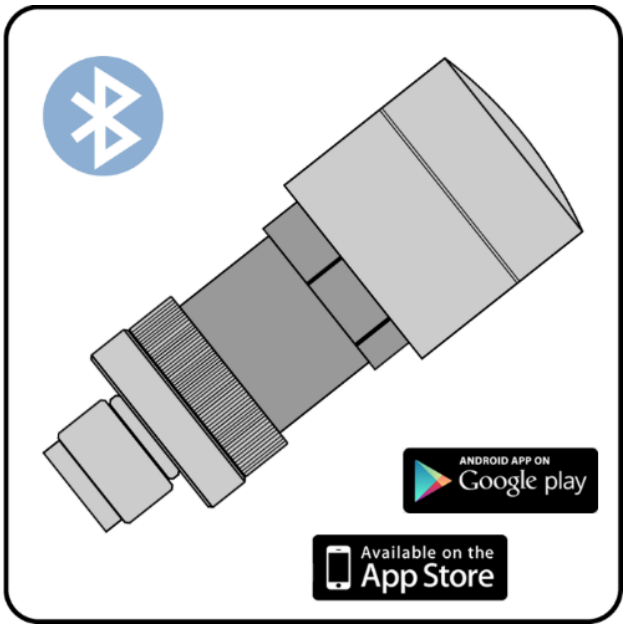

You can start up your INVEOR using the Bluetooth stick (art. no.: 10447294) and a mobile end device.

To establish communication, you can download our free KOSTAL INVERTERapp onto your mobile end device from the Google Play Store (ANDROID) or App Store (Apple IOS).

NOTE
If using the Bluetooth stick, the password is fixed as 000000.

10. Approvals, standards and guidelines

This chapter contains information about electromagnetic compatibility (EMC), and applicable guidelines, norms and standards.

For binding information about the relevant drive controller approvals, please refer to the relevant type plate!

10.1 EMC limit classes

NOTICE

This equipment has been tested and found to comply with the limits for a Class A digital device, pursuant to part 15 of the FCC Rules. These limits are designed to provide reasonable protection against harmful interference when the equipment is operated in a commercial environment. This equipment generates, uses, and can radiate radio frequency energy and, if not installed and used in accordance with the instruction manual, may cause harmful interference to radio communications. Operation of this equipment in a residential area is likely to cause harmful interference in which case the user will be required to correct the interference at his own expense

Please note that the EMC limit value classes specified below are only achieved if the standard switching frequency, as set at the factory, is adhered to.
Depending on the installation material used and/or extreme ambient conditions, it might be necessary to use additional sheath wave filters (ferrite rings). In the event of wall mounting, the following cable lengths must not be exceeded

INVEOR size	Cable type	EMC class (DIN-EN-61800-3)	Max. length
A 1 AC (0.37 kW - 1.5 kW)	Shielded motor cable	C1	9 ft (3 m)
		C2	16 ft (5 m)
	Unshielded motor cable	-	16 ft (5 m)
A 3 AC (0.55 kW - 1.5 kW)	Shielded motor cable	C2	9 ft (3 m)
		C3	16 ft (5 m)
	Unshielded motor cable	-	16 ft (5 m)
B (4 kW - 5.5 kW)	Shielded motor cable	C2	9 ft (3 m)
		C3	16 ft (5 m)
	Unshielded motor cable	-	16 ft (5 m)
C (5.5 kW - 7.5 kW)	Shielded motor cable	C2	9 ft (3 m)
		C3	65 ft (20 m)
	Unshielded motor cable	-	328 ft (100 m)
D (11 kW - 22 kW)	Shielded motor cable	C2	9 ft (3 m)
		C3	65 ft (20 m)
	Unshielded motor cable	-	328 ft (100 m)

NOTICE

- In a residential environment, this product can cause high-frequency disturbances that may require interference suppression measures.
- Wiring suitable for EMC also requires that EMC screw connections be used on both sides (drive controller and motor).
- If unshielded cables are used, certain EMC requirements may not be met in all circumstances, and additional EMC measures will therefore be required.

NOTICE

The cable for connecting the PTC must not exceed 16 ft (5 m), otherwise the factory-fitted bridge must remain in use.
For monitoring of the motor temperature, we would then recommend:

- the integrated I^2t function.
- the use of an external PTC evaluation unit that can be evaluated via the INVEOR.

10.2 Classification acc. to IEC/EN 61800-3

The generic standard defines test procedures and severity levels for every environment in the drive controller category; these have to be complied with.

Definition of environment

First environment (residential, commercial and industrial area):

All “areas” that are directly supplied by a public low-voltage connection, such as:

- residential area, e.g. houses, apartments etc.
- retail area, e.g. shops, supermarkets
- public institutions, e.g. theatres, stations
- outside areas, e.g. petrol stations and parking areas
- light industry, e.g. workshops, laboratories, small businesses

Second environment (industry):

Industrial environments with their own supply network that is separated from the public low-voltage supply by a transformer.

10.3 Harmonics currents and grid impedance for devices > 16 A and ≤ 75 A

Extract from EN 61000-3-12, applies to devices with a rated current > 16 A and ≤ 75 A, which are intended for connection to public low-voltage grids.

This device complies with IEC 61000-3-12 provided that the short-circuit power S_{SC} at the point where the customer's system connects with the public grid is greater than or equal to R_{SCE} x S_{equ}. If found to be necessary after contacting the distributor grid operator, the installer or operator of the device is responsible for ensuring that the device is only connected at a point with a short-circuit power S_{SC} greater than or equal to R_{SCE} x S_{equ}.	
R_{SC}	Grid's short-circuit power at point where customer's system connects with the public grid.
S_{equ}	Rated apparent power for three-phase devices: $S_{equ} = \sqrt{3} \times U_l \times I_{equ}$ (Ul = external wire voltage, see technical data → supply voltage) (Iequ = rated current of device, see technical data → line current)
R_{SCE}	Short-circuit power relation For these devices: $R_{SCE} \geq 350$

10.4 Standards and guidelines

The following specifically apply:

- Directive 2014/53/EU - Radio Equipment Directive
  (OJ L 153 from 22.05.2014, p. 62) *
- Directive 2011/65/EU - RoHS Directive
  (OJ L 174 from 01.07.2011, p. 88)

* The basic requirements of the
  Low Voltage Directive and EMC Directive are also met here.

10.5 UL approval

10.5.1 UL Specification (English version)

Maximum Ambient Temperature:

Electronic	Adapter	Ambient	Suffix
INV M A IV02 PW02	ADP MA WDM	113 °F (45 °C)	-
INV M A IV02 PW03	ADP MA WDM	113 °F (45 °C)	-
INV M A IV02 PW04	ADP MA WDM	113 °F (45 °C)	-
INV M A IV02 PW05	ADP MA WDM	104 °F (40 °C)	-
INV M A IV02 PW90	ADP MA WDM	- *	-
INV M A IV01 PW03	ADP MA WDM	104 °F (40 °C)	-
INV M A IV01 PW04	ADP MA WDM	104 °F (40 °C)	-
INV M A IV01 PW05	ADP MA WDM	104 °F (40 °C)	-
INV M A IV01 PW06	ADP MA WDM	104 °F (40 °C)	-
INV M B IV01 PW07	ADP MB WDM	113 °F (45 °C)	-
INV M B IV01 PW08	ADP MB WDM	113 °F (45 °C)	-
INV M B IV01 PW09	ADP MB WDM	95 °F (35 °C)	-
INV M C IV01 PW10	ADP MC WDM	104 °F (40 °C)	GH01, GH02, GH07, GH93, GH95, GH4x
INV M C IV01 PW11	ADP MC WDM	95 °F (35 °C)	GH01, GH02, GH07, GH93, GH95, GH4x
INV M C IV01 PW96	ADP MC WDM	95 °F (35 °C)	GH01, GH02, GH07, GH93, GH95, GH4x
INV M C IV01 PW97	ADP MC WDM	68 °F (20 °C)	GH01, GH02, GH07, GH93, GH95, GH4x
INV M C IV01 PW10	ADP MC WDM	131°F (55 °C)	GH04, GH96, GH5x
INV M C IV01 PW11	ADP MC WDM	122 °F (50 °C)	GH04, GH96, GH5x
INV M C IV01 PW96	ADP MC WDM	122 °F (50 °C)	GH04, GH96, GH5x
INV M C IV01 PW10	ADP MC WDM	122 °F (50 °C)	GH05, GH97, GH6x
INV M C IV01 PW11	ADP MC WDM	113 °F (45 °C)	GH05, GH97, GH6x
INV M C IV01 PW96	ADP MC WDM	113 °F (45 °C)	GH05, GH97, GH6x
INV M D IV01 PW12	ADP MD WDM	131°F (55 °C)	-
INV M D IV01 PW13	ADP MD WDM	122 °F (50 °C)	-
INV M D IV01 PW14	ADP MD WDM	104 °F (40 °C)	-
INV M D IV01 PW15	ADP MD WDM	95 °F (35 °C)	-

* depends on external cooling

Required Markings

Enclosure intended for use with field-installed conduit hubs, fittings or closure plates UL approved in accordance to UL514B and CSA certified in accordance to C22.2 No. 18, environmental Type 1 or higher.

Internal Overload Protection Operates within 60 seconds when reaching 150 % of the Motor Full Load Current.

Short circuit current rating (SCCR)

Suitable for use on a circuit capable of delivering not more than 200 kA rms symmetrical amperes, 230 Volts for INV Mx IV02 or 480 Volts for INV Mx IV01, maximum when protected by fuses.

“Warning” – Use fuses rated 600 V/50 A for INV MA IV02 only.

“Warning” – Use fuses rated 600 V/10 A for INV MA IV01 only.

“Warning” – Use fuses rated 600 V/30 A for INV MB IV01 only.

“Warning” – Use fuses rated 600 V/30 A for INV MC IV01 only.

“Warning” – Use fuses rated 600 V/70 A for INV MD IV01 only.

CAUTION: Integral solid state short circuit protection does not provide branch circuit protection. Branch circuit protection must be provided in accordance with the Manufacturer Instructions, National Electrical Code and any additional local codes.

All wiring terminals marked to indicate proper connections for the power supply, load and control circuitry.

The tightening, torque to connect the motor terminals, is 26.55 IB/in (size A to C) and 5.31 lb/in to connect the PTC (in all sizes).

Instruction for operator and servicing instructions on how to mount and connect the products using the intended motor connection adapter, please see chapter 3.3 and 9.1 in the operating manual.

CAUTION: Use 167 °F (75 °C) copper wires only.

Drives do not provide over temperature sensing.

CAUTION: For Mx IV01 used in Canada: TRANSIENT SURGE SUPPRESSION SHALL BE INSTALLED ON THE LINE SIDE OF THIS EQUIPMENT AND SHALL BE RATED 277 V (PHASE TO GROUND), 480 V (PHASE TO PHASE), SUITABLE FOR OVERVOLTAGE CATEGORY III, AND SHALL PROVIDE PROTECTION FOR A RATED IMPULSE WITHSTAND VOLTAGE PEAK OF 2.5 kV

The Type of branch circuit protection devices used for BREAKDOWN OF COMPONENT TEST is Nonrenewable Cartridge Fuse, Class _RK5.

As RK5 is the worst Case Type, any other Type can be used.

10.5.2 Homologation CL (Version en française)

Température ambiante maximale:

Électronic	Adaptateur	Ambiante	Suffixe
INV M A IV02 PW02	ADP MA WDM	113 °F (45 °C)	-
INV M A IV02 PW03	ADP MA WDM	113 °F (45 °C)	-
INV M A IV02 PW04	ADP MA WDM	113 °F (45 °C)	-
INV M A IV02 PW05	ADP MA WDM	104 °F (40 °C)	-
INV M A IV02 PW90	ADP MA WDM	- *	-
INV M A IV01 PW03	ADP MA WDM	104 °F (40 °C)	-
INV M A IV01 PW04	ADP MA WDM	104 °F (40 °C)	-
INV M A IV01 PW05	ADP MA WDM	104 °F (40 °C)	-
INV M A IV01 PW06	ADP MA WDM	104 °F (40 °C)	-
INV M B IV01 PW07	ADP MB WDM	113 °F (45 °C)	-
INV M B IV01 PW08	ADP MB WDM	104 °F (40 °C)	-
INV M B IV01 PW09	ADP MB WDM	95 °F (35 °C)	-
INV M C IV01 PW10	ADP MC WDM	104 °F (40 °C)	GH01, GH02, GH07, GH93, GH95, GH4x
INV M C IV01 PW11	ADP MC WDM	95 °F (35 °C)	GH01, GH02, GH07, GH93, GH95, GH4x
INV M C IV01 PW96	ADP MC WDM	95 °F (35 °C)	GH01, GH02, GH07, GH93, GH95, GH4x
INV M C IV01 PW97	ADP MC WDM	68 °F (20 °C)	GH01, GH02, GH07, GH93, GH95, GH4x
INV M C IV01 PW10	ADP MC WDM	131°F (55 °C)	GH04, GH96, GH5x
INV M C IV01 PW11	ADP MC WDM	122 °F (50 °C)	GH04, GH96, GH5x
INV M C IV01 PW96	ADP MC WDM	122 °F (50 °C)	GH04, GH96, GH5x
INV M C IV01 PW10	ADP MC WDM	122 °F (50 °C)	GH05, GH97, GH6x
INV M C IV01 PW11	ADP MC WDM	113 °F (45 °C)	GH05, GH97, GH6x
INV M C IV01 PW96	ADP MC WDM	113 °F (45 °C)	GH05, GH97, GH6x
INV M D IV01 PW12	ADP MD WDM	131°F (55 °C)	-
INV M D IV01 PW13	ADP MD WDM	122 °F (50 °C)	-
INV M D IV01 PW14	ADP MD WDM	104 °F (40 °C)	-
INV M D IV01 PW15	ADP MD WDM	95 °F (35 °C)	-

* dépend du refroidissement externe

Mentions requises

Boîtier prévu pour une utilisation avec entrées de conduit filetées installées sur le terrain, raccords ou plaques d'obturation approuvées UL conformément à UL514B et certifiées CSA conformément à C22.2 No. 18, étiquetage environnemental de type 1 ou plus.

La protection interne contre les surcharges se met en marche en l'espace de 60 secondes une fois 150 % du courant nominal du moteur atteints

Short circuit current rating (SCCR)

Convient pour une utilisation sur un circuit capable de livrer pas plus de 200 kA ampères symétriques rms, 230 volts pour INV Mx IV02 ou 480 volts pour INV Mx IV01 maximum en cas de protection par fusibles.

« Avertissement » – Utiliser des fusibles d'une valeur nominale de 600 V/50 A pour INV MA IV02 uniquement.

« Avertissement » – Utiliser des fusibles d'une valeur nominale de 600 V/10 A pour INV MA IV01 uniquement.

« Avertissement » – Utiliser des fusibles d'une valeur nominale de 600 V/30 A pour INV MB IV01 uniquement.

« Avertissement » – Utiliser des fusibles d'une valeur nominale de 600 V/30 A pour INV MC IV01 uniquement.

« Avertissement » – Utiliser des fusibles d'une valeur nominale de 600 V/70 A pour INV MD IV01 uniquement.

La protection intégrée contre les courts-circuits à semi-conducteur n'assure pas la protection du circuit de dérivation. Le circuit de dérivation doit être protégé conformément aux instructions du fabricant, au code national d'électricité et à tout autre code local additionnel.

Toutes les bornes de câblage avec repères pour les connexions correctes pour l'alimentation électrique, la charge et les circuits de commande.

Le couple de serrage pour la connexion des bornes du moteur est de 26,55 lb/in (taille A à C) et de 5,31 lb/in pour la connexion CTP (toutes les tailles).

Pour les instructions destinées à l'opérateur et les instructions de service relatives au montage et à la connexion des produits à l'aide de l'adaptateur de connexion du moteur prévu à cet effet, voir les chapitres 3.3 et 9.1 contenus dans le Manuel d'utilisation.

Utiliser uniquement des câbles en cuivre 167 °F (75 °C).

Les entraînements ne permettent pas la détection de surtempérature.

Concernant le Mx IV01 utilisé au Canada : LA SUPPRESSION DE TENSION TRANSITOIRE DOIT ÊTRE INSTALLÉE CÔTÉ LIGNE DE CET ÉQUIPEMENT ET AVOIR UNE VALEUR NOMINALE DE 277 V (PHASE-TERRE), 480 V (PHASE-PHASE), EN COMPATIBILITÉ AVEC LA CATÉGORIE DE SURTENSION III, ET DOIT OFFRIR UNE PROTECTION CONTRE UN PIC DE TENSION ASSIGNÉE DE TENUE AUX CHOCS DE 2,5 kV

Le fusible cartouche à usage unique de classe RK5 est le type de dispositifs de protection des circuits de dérivation utilisé pour l’ESSAI DE PANNE DES COMPOSANTS.

RK5 étant le type employé dans les scénarios catastrophes, n’importe quel autre type peut être utilisé.

11.Quickstart guide

11.1 Quickstart guide

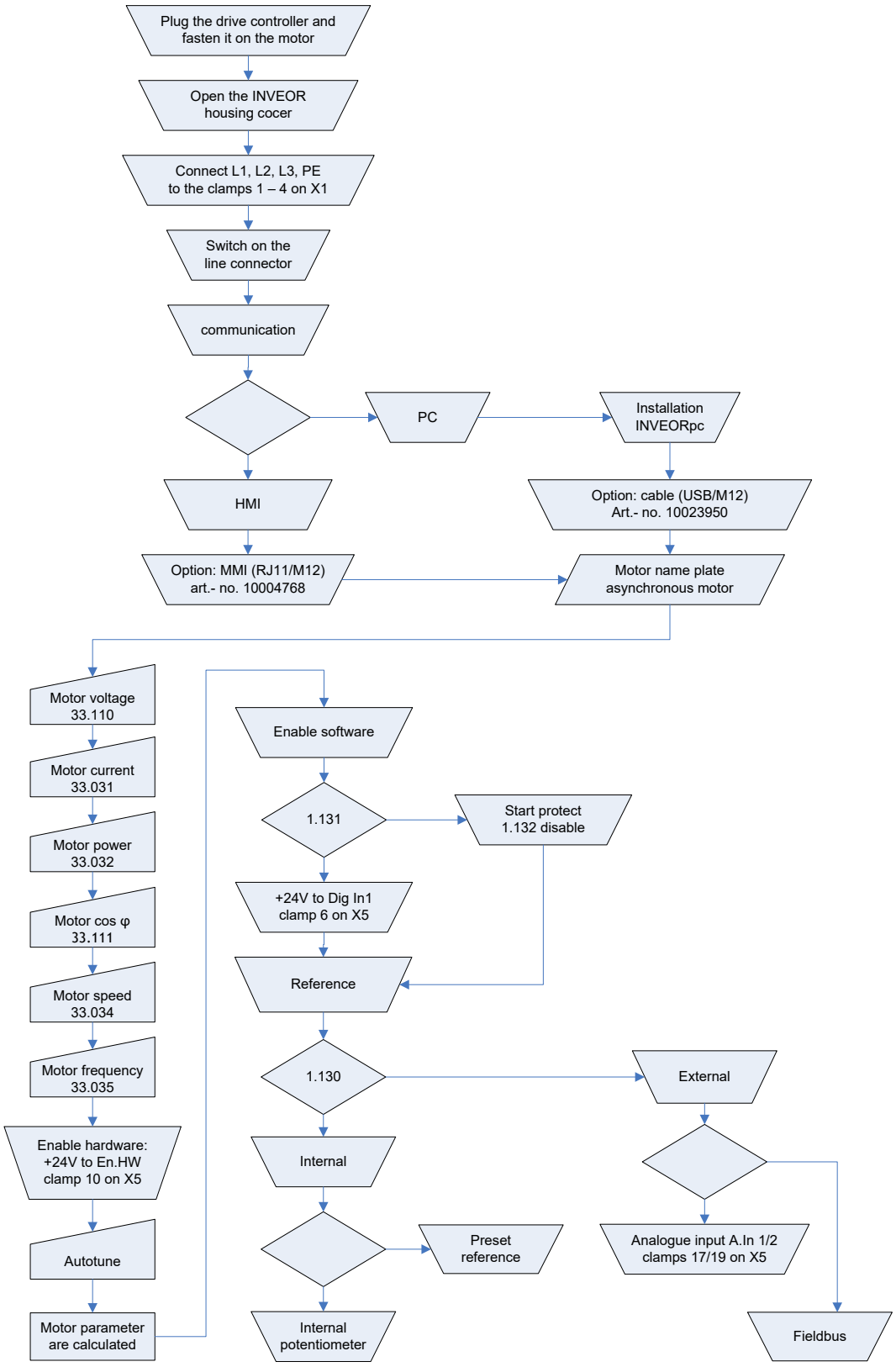

Fig. 57: Block diagram for quick start ASM

11.2 Quickstart guide for synchronous motors

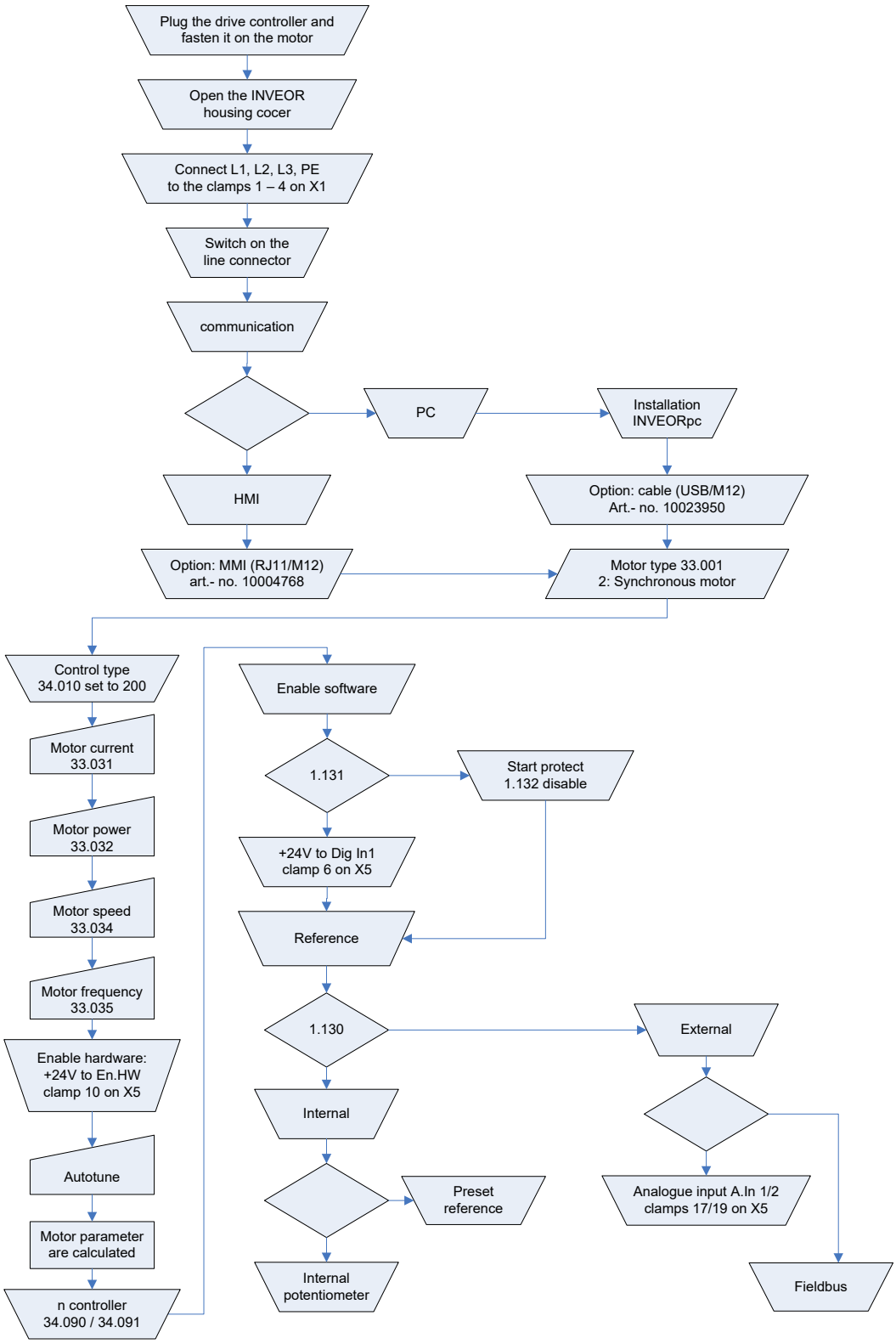

Fig. 58: Block diagram for quick start

12. Index

A

Acknowledgement function 64
Additional function 79
Ambient conditions 17
Ambient temperature 99
Analogue input 34, 69
Analogue output 34, 72
Application parameters 60
Automatic acknowledgement function 64

B

Block diagram 53
Blocking detection 78
Bluetooth 52, 83, 84, 109
Brake chopper 32
Brake resistor 32

C

Cable screw connections 17, 33
Cable shoes 20, 42
Catch time 88
CE marking 8
Commissioning 50, 116
Commissioning steps 54
Communication 51
Connection diagram 38
Control connections 33
Control connections of the basic application board 37
Control method 87
Control terminals (sizes A – D) 21
Controller data 87
Convection 39

D

Derating 99
Digital input 35, 37, 72
Digital output 36, 37, 73

E

Electrical connection 29
EMC limit classes 110
EMC standard 110
Enable software 62
Energy-saving function 57
Error detection 91, 94
Ethernet Feldbus 81
Excess temperature 93, 94
External fault 77

F

Factory setting ... 59
Fan ... 17
FI protection switch ... 10
Field weakening ... 90
Fieldbus ... 81
Fieldbus address ... 82
Fixed frequency ... 58
Flying restart ... 88
Foil keypad ... 107
Frequency ... 34
Frequency setting mode ... 56

G

Gearbox factor ... 78
General technical data for 230 V devices ... 97
General technical data for 400V devices ... 96
Grid connection ... 29

I

I2t limit ... 87
Information about commissioning ... 10
Installation ... 18, 39, 105
Installation altitude ... 17, 100
Instructions concerning operation ... 10

L

Label on the drive controller ... 7
Leakage inductance ... 86
LED flash codes ... 91
Legal notice ... 2
Long-term storage ... 10

M

Mains activations ... 11
Maximum frequency ... 60
Mechanical installation of size D ... 27, 43
Mechanical installation of sizes A - C ... 24, 40
Minimum frequency ... 60
MMI ... 51, 109
MMI Parameters ... 80
Model description ... 13
Motor ... 15
Motor adapter plates ... 102
Motor cos phi ... 86
Motor current ... 85
Motor current limit ... 78
Motor frequency ... 85
Motor phase monitoring ... 85
Motor potentiometer ... 65
Motor rating ... 85
Motor speed ... 85
Motor voltage ... 84, 86

O

Operating mode 61
Optional accessories 102
Overcurrent 93
Overheating 93
Overload 92, 93
Overvoltage 92, 93

P

Parameter 55
Parameter set 92
Parameter set change 80
Parameterisation 5, 54
PC cable 109
Performance parameters 84
PID inverted 56, 67
PID process control 56
PID process controller 66
Power connection for size D 31
Power connection for sizes A - C 29
Power connections (size D) 23
Power connections (sizes A – C) 22

Q

Quadratic characteristic curve 89
Quickstart guide 116

R

Ramp 60, 61
Relay 36, 74
Repairs 12
Rotation direction 63

S

Safety instructions 8
Set bus timeout 83
Set field bus baud rate 82
Short circuit current rating (SCCR) 113, 115
Slip 89
Speed 85
Speed controller 88
Standards 111
Star connection variant 20
Start-up procedure SM 90
Start-up protection 63
Stator inductance 84, 86
Stator resistance 85, 86
Switching frequency 87, 101
Synchronous motor controller data 90
System error 92

T

Target value source 62
Technical data 96
Transport & storage 9
Triangle connection variant 19

U

UL 112
Undervoltage 92, 93

W

Wall adapter plates 105
Wiring instructions 21

KOSTAL Industrie Elektrik GmbH
Lange Eck 11
58099 Hagen
Germany
www.kostal-industrie-elektrik.com

Service hotline: +49 (0)2331 80 40-848

Telephone: +49 (0)2331 80 40-800

Fax: +49 (0)2331 80 40-602