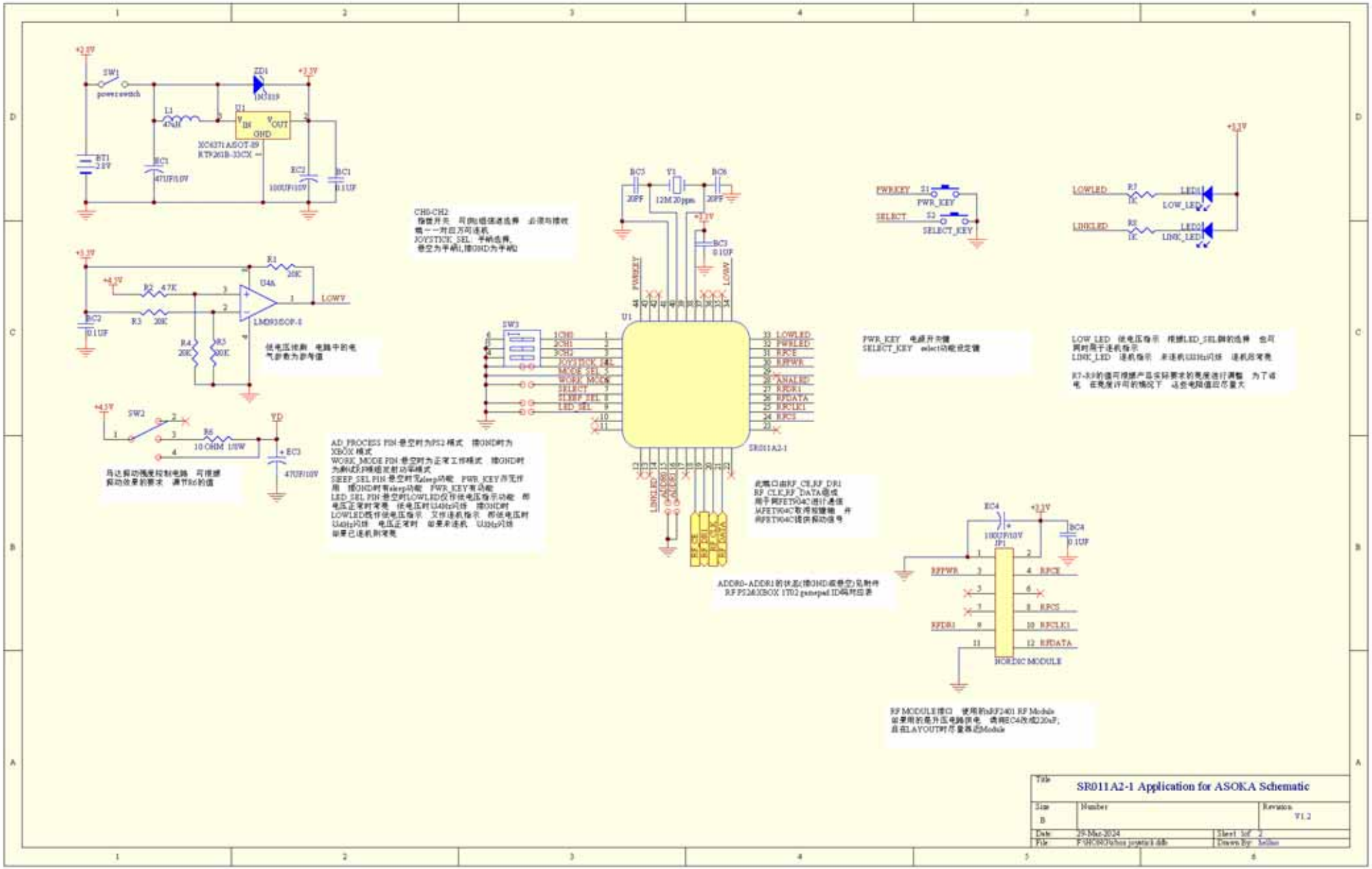
SR011A2-1 Application for ASOKA Schematic
Size B
Number
Revision V1.2
Date 29-Mar-2024
Sheet 1of 2
File F:\HC007\xbox joystick.sch
Drawn By: Kellan
power switch
XC6371 A50T-89
RTP261B-33CX
LMD9150OP-E
U1
SR011A2-1
JOYSTICK_SEL
MODE_SEL_2
WORK_MODE
SELECT
SLEEP_SEL
LED_SEL
PWR_KEY
SELECT_KEY
LOW_LED
LINK_LED
RF PS2&XBOX 1702 gamepad ID
NORDIC MODULE

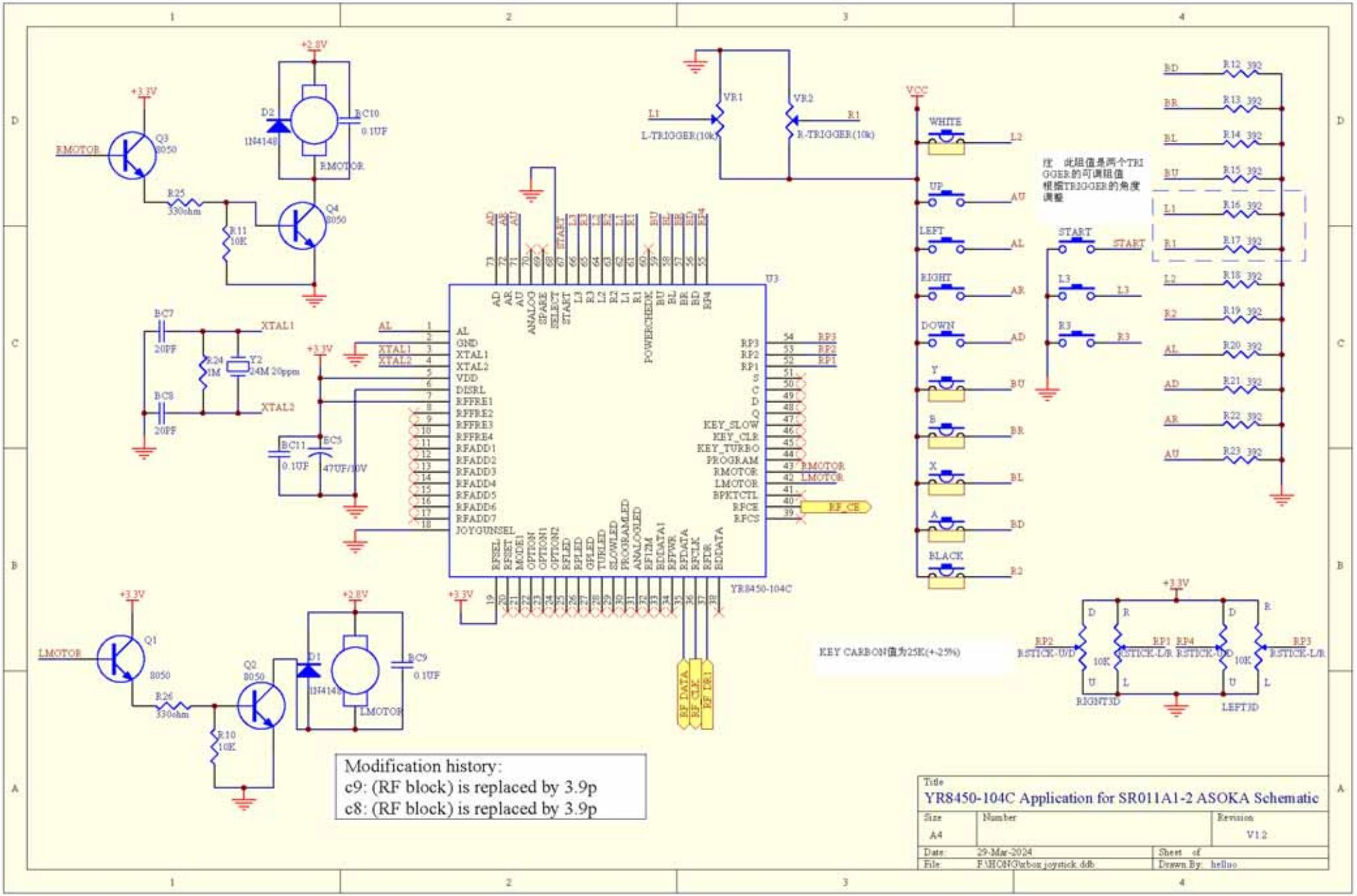
U3
YR8450-104C
VR1
L-TRIGGER(10k)
VR2
R-TRIGGER(10k)
VCC
WHITE
UP
LEFT
RIGHT
DOWN
Y
B
X
A
BLACK
START
L3
R3
注 此阻值是两个TRIGGER的可调阻值
根据TRIGGER的角度调整
KEY CARBON值为25K(+-25%)
RSTICK-U/D
RSTICK-L/R
RIGHT3D
LEFT3D
RMOTOR
LMOTOR
RF_CE
RF_DATA
RF_CLK
RF_TR1
XTAL1
XTAL2
Modification history:
c9: (RF block) is replaced by 3.9p
c8: (RF block) is replaced by 3.9p
Title
YR8450-104C Application for SR011A1-2 ASOKA Schematic
Size
A4
Number
Revision
V1.2
Date: 29-Mar-2024
Sheet of
File: F:\HONGxbox joystick.ddb
Drawn By: hellue