Test Mode: LTE Band 41 / 20MHz / 1RB / 16-QAM

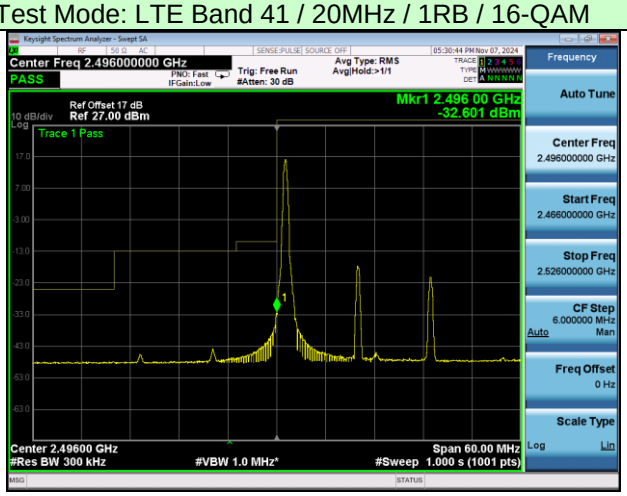

Lowest channel

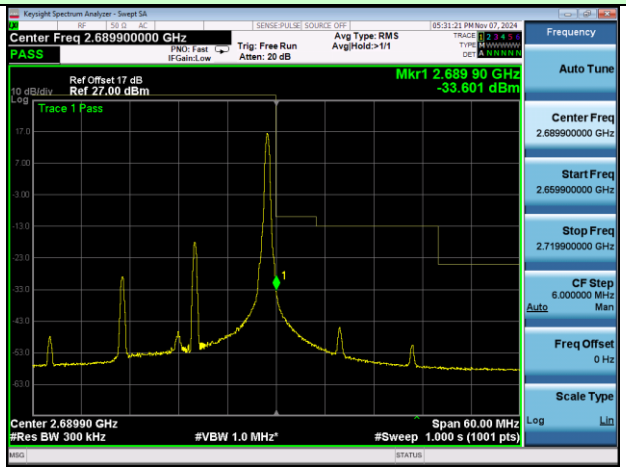

Highest channel

Test Mode: LTE Band 41 / 20MHz / 100RB / 16-QAM

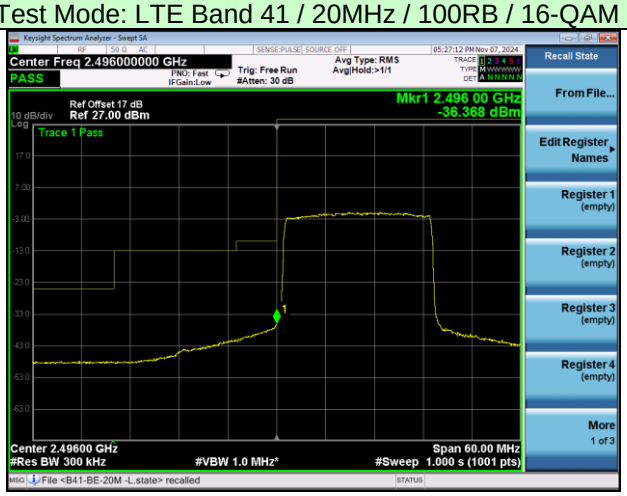

Lowest channel

Highest channel

Note: All bandwidth and modulation are tested, only the worst result is reported.

4.8 ERP, EIRP Measurement

Test Requirement:	FCC part22.913(a), FCC part24.232(b), FCC part 27.50(h) and FCC part 27.53
Test Method:	ANSI C63.26:2015
Limit:	LTE Band 2: 2W (EIRP) LTE Band 4: 1W (EIRP) LTE Band 5(Upper Band): [7W (ERP) for FCC] LTE Band 7: 2W (EIRP) LTE Band 12: 2W (ERP) LTE Band 13: 2W (ERP) LTE Band 41: 2W (EIRP)
Test setup:	Below 1GHz 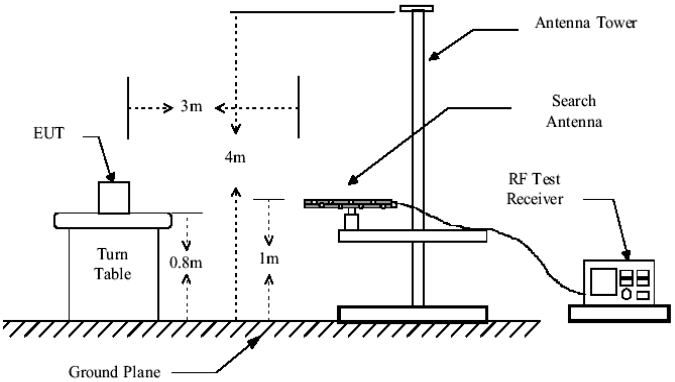 Above 1GHz 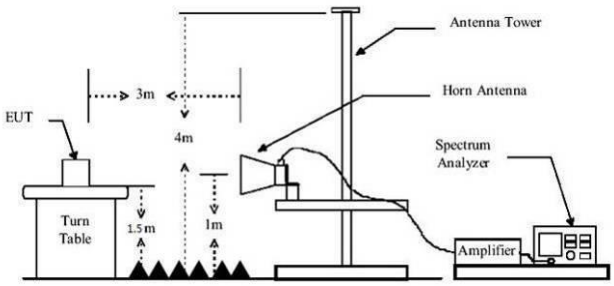 Substituted method: 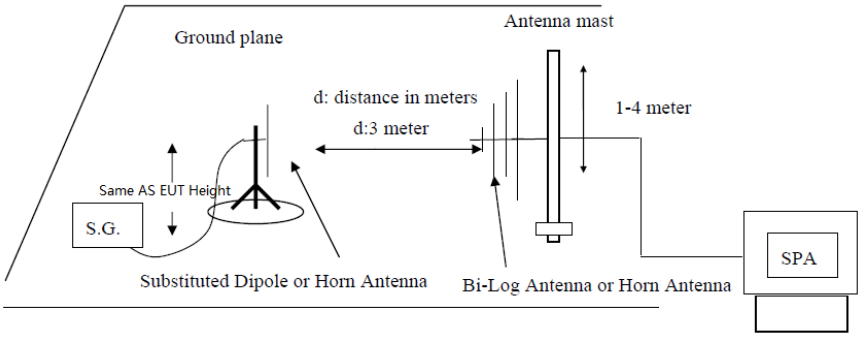

Test Procedure:	1. The EUT was placed on an non-conductive turntable using a non-conductive support. The radiated emission at the fundamental frequency was measured at 3 m with a test antenna and EMI spectrum analyzer. 2. During the measurement, the EUT was communication with the station. The highest emission was recorded with the rotation of the turntable and the lowering of the test antenna from 4m to 1m. The reading was recorded and the field strength (E in dBuV/m) was calculated. 3. ERP were measured using a substitution method. The EUT was replaced by dipole antenna connected, the S.G. output was recorded and ERP was calculated asfollows: ERP = S.G. output (dBm) + Antenna Gain (dBd) – Cable Loss (dB) 4. EIRP were measured using a substitution method. The EUT was replaced by or horn antenna connected, the S.G. output was recorded and EIRP was calculated as follows: EIRP = S.G. output (dBm) + Antenna Gain (dBi) – Cable Loss (dB)
Test Instruments:	Refer to section 3 for details
Test mode:	Refer to section 4.1 for details
Test results:	Pass
Remark:	H,E1,E2 mean for EUT polarization of X, Y, Z

Measurement Data

EUT mode	RB Size	RB Offset	Channel	EUT Pol.	Antenna Pol.	EIRP (dBm)	Limit (dBm)	Result
LTE Band 2 (1.4MHz) QPSK	6	0	Lowest	H	V	23.80	33.00	Pass
					H	23.07		
				E1	V	24.14		
					H	23.20		
				E2	V	23.68		
					H	23.18		
	6	0	Middle	H	V	23.23	33.00	Pass
					H	23.14		
				E1	V	23.44		
					H	23.70		
				E2	V	23.89		
					H	23.10		
	6	0	Highest	H	V	23.30	33.00	Pass
					H	23.99		
				E1	V	23.75		
					H	22.97		
				E2	V	23.46		
					H	23.38		

EUT mode	Channel	RB Size	RB Offset	EUT Pol.	Antenna Pol.	EIRP(dBm)	Limit (dBm)	Result
LTE Band 2 (3MHz) QPSK	Lowest	15	0	H	V	23.24	33.00	Pass
					H	23.39		
				E1	V	23.28		
					H	23.70		
				E2	V	22.89		
					H	23.03		
	Middle	15	0	H	V	24.05	33.00	Pass
					H	23.96		
				E1	V	23.16		
					H	23.62		
				E2	V	23.05		
					H	22.84		
	Highest	15	0	H	V	24.04	33.00	Pass
					H	24.00		
				E1	V	23.16		
					H	23.56		
				E2	V	23.00		
					H	23.53		

EUT mode	Channel	RB Size	RB Offset	EUT Pol.	Antenna Pol.	EIRP(dBm)	Limit (dBm)	Result
LTE Band 2 (5MHz) QPSK	Lowest	25	0	H	V	23.68	33.00	Pass
					H	22.85		
				E1	V	23.24		
					H	23.39		
				E2	V	23.27		
					H	23.37		
	Middle	25	0	H	V	23.22	33.00	Pass
					H	23.18		
				E1	V	23.27		
					H	23.06		
				E2	V	23.48		
					H	23.62		
	Highest	25	0	H	V	23.45	33.00	Pass
					H	23.19		
				E1	V	23.33		
					H	23.03		
				E2	V	23.24		
					H	23.06		

EUT mode	Channel	RB Size	RB Offset	EUT Pol.	Antenna Pol.	EIRP(dBm)	Limit (dBm)	Result
LTE Band 2 (10MHz) QPSK	Lowest	50	0	H	V	23.69	33.00	Pass
					H	22.88		
				E1	V	23.34		
					H	23.93		
				E2	V	23.62		
					H	23.15		
	Middle	50	0	H	V	23.98	33.00	Pass
					H	23.54		
				E1	V	23.14		
					H	23.68		
				E2	V	23.58		
					H	22.80		
	Highest	50	0	H	V	23.73	33.00	Pass
					H	23.58		
				E1	V	23.16		
					H	23.42		
				E2	V	23.74		
					H	23.44		

EUT mode	Channel	RB Size	RB Offset	EUT Pol.	Antenna Pol.	EIRP(dBm)	Limit (dBm)	Result
LTE Band 2 (15MHz) QPSK	Lowest	75	0	H	V	23.23	33.00	Pass
					H	22.39		
				E1	V	23.45		
					H	24.27		
				E2	V	24.14		
					H	23.61		
	Middle	75	0	H	V	24.17	33.00	Pass
					H	22.85		
				E1	V	24.12		
					H	23.87		
				E2	V	23.64		
					H	22.19		
	Highest	75	0	H	V	23.98	33.00	Pass
					H	23.09		
				E1	V	22.27		
					H	23.47		
				E2	V	23.30		
					H	23.77		

EUT mode	Channel	RB Size	RB Offset	EUT Pol.	Antenna Pol.	EIRP(dBm)	Limit (dBm)	Result
LTE Band 2 (20MHz) QPSK	Lowest	100	0	H	V	24.30	33.00	Pass
					H	22.87		
				E1	V	23.76		
					H	24.75		
				E2	V	23.69		
					H	22.34		
	Middle	100	0	H	V	23.67	33.00	Pass
					H	23.71		
				E1	V	22.43		
					H	22.79		
				E2	V	23.40		
					H	22.16		
	Highest	100	0	H	V	23.40	33.00	Pass
					H	24.23		
				E1	V	22.43		
					H	23.16		
				E2	V	23.53		
					H	24.55		

EUT mode	RB Size	RB Offset	Channel	EUT Pol.	Antenna Pol.	EIRP (dBm)	Limit (dBm)	Result
LTE Band 2 (1.4MHz) 16 QAM	6	0	Lowest	H	V	22.07	33.00	Pass
					H	23.48		
				E1	V	22.07		
					H	21.53		
				E2	V	21.86		
					H	22.65		
	6	0	Middle	H	V	22.59	33.00	Pass
					H	22.10		
				E1	V	23.00		
					H	21.83		
				E2	V	22.67		
					H	22.54		
	6	0	Highest	H	V	23.02	33.00	Pass
					H	23.32		
				E1	V	23.46		
					H	21.84		
				E2	V	22.65		
					H	22.62		

EUT mode	Channel	RB Size	RB Offset	EUT Pol.	Antenna Pol.	EIRP(dBm)	Limit (dBm)	Result
LTE Band 2 (3MHz) 16 QAM	Lowest	15	0	H	V	21.87	33.00	Pass
					H	21.93		
				E1	V	22.36		
					H	22.76		
				E2	V	21.61		
					H	22.97		
	Middle	15	0	H	V	21.54	33.00	Pass
					H	23.10		
				E1	V	23.36		
					H	22.21		
				E2	V	22.28		
					H	23.01		
	Highest	15	0	H	V	22.26	33.00	Pass
					H	22.42		
				E1	V	22.33		
					H	21.56		
				E2	V	23.08		
					H	22.08		

EUT mode	Channel	RB Size	RB Offset	EUT Pol.	Antenna Pol.	EIRP(dBm)	Limit (dBm)	Result
LTE Band 2 (5MHz) 16 QAM	Lowest	25	0	H	V	22.17	33.00	Pass
					H	23.34		
				E1	V	21.54		
					H	22.16		
				E2	V	21.80		
					H	23.03		
	Middle	25	0	H	V	23.05	33.00	Pass
					H	22.67		
				E1	V	23.37		
					H	22.10		
				E2	V	21.87		
					H	23.23		
	Highest	25	0	H	V	22.66	33.00	Pass
					H	23.22		
				E1	V	21.79		
					H	22.81		
				E2	V	22.57		
					H	23.18		

EUT mode	Channel	RB Size	RB Offset	EUT Pol.	Antenna Pol.	EIRP(dBm)	Limit (dBm)	Result
LTE Band 2 (10MHz) 16 QAM	Lowest	50	0	H	V	21.54	33.00	Pass
					H	23.22		
				E1	V	22.13		
					H	23.39		
				E2	V	22.18		
					H	23.18		
	Middle	50	0	H	V	23.30	33.00	Pass
					H	23.02		
				E1	V	22.88		
					H	23.03		
				E2	V	21.92		
					H	22.73		
	Highest	50	0	H	V	22.23	33.00	Pass
					H	22.32		
				E1	V	23.47		
					H	21.99		
				E2	V	23.49		
					H	22.03		

EUT mode	Channel	RB Size	RB Offset	EUT Pol.	Antenna Pol.	EIRP(dBm)	Limit (dBm)	Result
LTE Band 2 (15MHz) 16 QAM	Lowest	75	0	H	V	22.25	33.00	Pass
					H	21.65		
				E1	V	22.09		
					H	22.81		
				E2	V	23.09		
					H	22.68		
	Middle	75	0	H	V	21.64	33.00	Pass
					H	22.15		
				E1	V	22.41		
					H	23.20		
				E2	V	23.31		
					H	23.48		
	Highest	75	0	H	V	22.96	33.00	Pass
					H	23.49		
				E1	V	23.36		
					H	23.14		
				E2	V	21.73		
					H	22.36		

EUT mode	Channel	RB Size	RB Offset	EUT Pol.	Antenna Pol.	EIRP(dBm)	Limit (dBm)	Result
LTE Band 2 (20MHz) 16 QAM	Lowest	100	0	H	V	21.57	33.00	Pass
					H	22.33		
				E1	V	22.30		
					H	21.66		
				E2	V	21.67		
					H	23.06		
	Middle	100	0	H	V	23.01	33.00	Pass
					H	23.22		
				E1	V	22.33		
					H	22.54		
				E2	V	22.08		
					H	22.42		
	Highest	100	0	H	V	21.55	33.00	Pass
					H	22.57		
				E1	V	23.46		
					H	23.40		
				E2	V	21.71		
					H	22.72		

EUT mode	Channel	RB Size	RB Offset	EUT Pol.	Antenna Pol.	EIRP(dBm)	Limit (dBm)	Result
LTE Band 4 (1.4MHz) QPSK	Lowest	6	0	H	V	22.82	30.00	Pass
					H	22.78		
				E1	V	22.70		
					H	22.45		
				E2	V	22.73		
					H	23.46		
	Middle	6	0	H	V	21.56	30.00	Pass
					H	21.93		
				E1	V	21.88		
					H	22.12		
				E2	V	21.99		
					H	22.01		
	Highest	6	0	H	V	22.38	30.00	Pass
					H	22.36		
				E1	V	22.44		
					H	21.52		
				E2	V	22.61		
					H	21.72		

EUT mode	Channel	RB Size	RB Offset	EUT Pol.	Antenna Pol.	EIRP(dBm)	Limit (dBm)	Result
LTE Band 4 (3MHz) QPSK	Lowest	15	0	H	V	21.66	30.00	Pass
					H	23.17		
				E1	V	22.93		
					H	21.74		
				E2	V	22.56		
					H	22.28		
	Middle	15	0	H	V	21.85	30.00	Pass
					H	22.18		
				E1	V	22.87		
					H	22.43		
				E2	V	22.72		
					H	23.07		
	Highest	15	0	H	V	22.75	30.00	Pass
					H	23.13		
				E1	V	22.94		
					H	23.31		
				E2	V	21.60		
					H	22.39		

EUT mode	Channel	RB Size	RB Offset	EUT Pol.	Antenna Pol.	EIRP(dBm)	Limit (dBm)	Result
LTE Band 4 (5MHz) QPSK	Lowest	25	0	H	V	23.43	30.00	Pass
					H	22.14		
				E1	V	22.57		
					H	22.23		
				E2	V	22.75		
					H	22.85		
	Middle	25	0	H	V	21.82	30.00	Pass
					H	21.75		
				E1	V	22.91		
					H	23.33		
				E2	V	22.72		
					H	22.08		
	Highest	25	0	H	V	22.44	30.00	Pass
					H	22.04		
				E1	V	22.70		
					H	23.09		
				E2	V	22.83		
					H	23.06		

EUT mode	Channel	RB Size	RB Offset	EUT Pol.	Antenna Pol.	EIRP(dBm)	Limit (dBm)	Result
LTE Band 4 (10MHz) QPSK	Lowest	50	0	H	V	21.75	30.00	Pass
					H	21.86		
				E1	V	23.06		
					H	22.85		
				E2	V	22.63		
					H	22.93		
	Middle	50	0	H	V	22.98	30.00	Pass
					H	23.24		
				E1	V	22.40		
					H	23.13		
				E2	V	22.15		
					H	23.35		
	Highest	50	0	H	V	22.24	30.00	Pass
					H	21.60		
				E1	V	22.28		
					H	23.48		
				E2	V	22.87		
					H	21.93		

EUT mode	Channel	RB Size	RB Offset	EUT Pol.	Antenna Pol.	EIRP(dBm)	Limit (dBm)	Result
LTE Band 4 (15MHz) QPSK	Lowest	75	0	H	V	22.65	30.00	Pass
					H	22.57		
				E1	V	22.02		
					H	22.33		
				E2	V	22.79		
					H	21.87		
	Middle	75	0	H	V	22.33	30.00	Pass
					H	21.64		
				E1	V	21.58		
					H	23.11		
				E2	V	22.21		
					H	23.35		
	Highest	75	0	H	V	22.98	30.00	Pass
					H	22.45		
				E1	V	22.04		
					H	23.31		
				E2	V	21.66		
					H	23.28		

EUT mode	Channel	RB Size	RB Offset	EUT Pol.	Antenna Pol.	EIRP(dBm)	Limit (dBm)	Result
LTE Band 4 (20MHz) QPSK	Lowest	100	0	H	V	21.74	30.00	Pass
					H	21.81		
				E1	V	23.40		
					H	22.20		
				E2	V	23.22		
					H	22.11		
	Middle	100	0	H	V	23.44	30.00	Pass
					H	23.03		
				E1	V	21.58		
					H	23.25		
				E2	V	23.27		
					H	22.68		
	Highest	100	0	H	V	22.52	30.00	Pass
					H	22.01		
				E1	V	22.48		
					H	22.18		
				E2	V	21.86		
					H	22.89		

EUT mode	Channel	RB Size	RB Offset	EUT Pol.	Antenna Pol.	EIRP(dBm)	Limit (dBm)	Result
LTE Band 4 (1.4MHz) 16 QAM	Lowest	6	0	H	V	21.90	30.00	Pass
					H	22.02		
				E1	V	22.11		
					H	22.30		
				E2	V	23.08		
					H	23.39		
	Middle	6	0	H	V	22.05	30.00	Pass
					H	23.21		
				E1	V	22.38		
					H	22.11		
				E2	V	21.51		
					H	22.79		
	Highest	6	0	H	V	22.28	30.00	Pass
					H	21.88		
				E1	V	23.30		
					H	23.14		
				E2	V	21.64		
					H	22.20		

EUT mode	Channel	RB Size	RB Offset	EUT Pol.	Antenna Pol.	EIRP(dBm)	Limit (dBm)	Result
LTE Band 4 (3MHz) 16 QAM	Lowest	15	0	H	V	21.55	30.00	Pass
					H	22.18		
				E1	V	23.13		
					H	22.73		
				E2	V	23.35		
					H	23.18		
	Middle	15	0	H	V	22.01	30.00	Pass
					H	22.71		
				E1	V	22.72		
					H	21.73		
				E2	V	23.35		
					H	22.49		
	Highest	15	0	H	V	23.31	30.00	Pass
					H	21.90		
				E1	V	21.52		
					H	23.44		
				E2	V	22.60		
					H	23.23		

EUT mode	Channel	RB Size	RB Offset	EUT Pol.	Antenna Pol.	EIRP(dBm)	Limit (dBm)	Result
LTE Band 4 (5MHz) 16 QAM	Lowest	25	0	H	V	22.16	30.00	Pass
					H	21.69		
				E1	V	22.03		
					H	21.55		
				E2	V	23.22		
					H	22.02		
	Middle	25	0	H	V	21.77	30.00	Pass
					H	21.74		
				E1	V	22.97		
					H	23.24		
				E2	V	23.11		
					H	22.57		
	Highest	25	0	H	V	22.24	30.00	Pass
					H	21.75		
				E1	V	21.58		
					H	22.09		
				E2	V	21.92		
					H	23.17		

EUT mode	Channel	RB Size	RB Offset	EUT Pol.	Antenna Pol.	EIRP(dBm)	Limit (dBm)	Result
LTE Band 4 (10MHz) 16 QAM	Lowest	50	0	H	V	22.63	30.00	Pass
					H	22.46		
				E1	V	23.04		
					H	21.95		
				E2	V	22.43		
					H	21.93		
	Middle	50	0	H	V	21.89	30.00	Pass
					H	23.26		
				E1	V	23.03		
					H	23.02		
				E2	V	22.96		
					H	23.48		
	Highest	50	0	H	V	21.53	30.00	Pass
					H	22.65		
				E1	V	22.63		
					H	22.44		
				E2	V	22.73		
					H	22.09		

EUT mode	Channel	RB Size	RB Offset	EUT Pol.	Antenna Pol.	EIRP(dBm)	Limit (dBm)	Result
LTE Band 4 (15MHz) 16 QAM	Lowest	75	0	H	V	22.32	30.00	Pass
					H	21.54		
				E1	V	22.26		
					H	23.61		
				E2	V	22.64		
					H	22.23		
	Middle	75	0	H	V	22.94	30.00	Pass
					H	21.41		
				E1	V	21.57		
					H	22.09		
				E2	V	21.98		
					H	21.45		
	Highest	75	0	H	V	22.74	30.00	Pass
					H	21.98		
				E1	V	22.17		
					H	23.36		
				E2	V	21.48		
					H	23.12		

EUT mode	Channel	RB Size	RB Offset	EUT Pol.	Antenna Pol.	EIRP(dBm)	Limit (dBm)	Result
LTE Band 4 (20MHz) 16 QAM	Lowest	100	0	H	V	22.94	30.00	Pass
					H	23.66		
				E1	V	22.01		
					H	22.96		
				E2	V	22.55		
					H	22.23		
	Middle	100	0	H	V	22.44	30.00	Pass
					H	22.25		
				E1	V	22.16		
					H	21.54		
				E2	V	23.65		
					H	23.29		
	Highest	100	0	H	V	21.32	30.00	Pass
					H	21.99		
				E1	V	22.72		
					H	21.74		
				E2	V	22.68		
					H	23.47		

EUT mode	Channel	RB Size	RB Offset	EUT Pol.	Antenna Pol.	ERP(dBm)	Limit (dBm)	Result
LTE Band 5 (1.4MHz) QPSK	Lowest	6	0	H	V	23.46	38.45	Pass
					H	21.53		
				E1	V	21.83		
					H	23.54		
				E2	V	21.45		
					H	23.19		
	Middle	6	0	H	V	22.06	38.45	Pass
					H	21.84		
				E1	V	23.26		
					H	23.24		
				E2	V	23.32		
					H	23.41		
	Highest	6	0	H	V	21.60	38.45	Pass
					H	21.82		
				E1	V	22.59		
					H	23.61		
				E2	V	23.07		
					H	21.55		

EUT mode	Channel	RB Size	RB Offset	EUT Pol.	Antenna Pol.	ERP(dBm)	Limit (dBm)	Result
LTE Band 5 (3MHz) QPSK	Lowest	15	0	H	V	21.79	38.45	Pass
					H	23.09		
				E1	V	22.72		
					H	23.56		
				E2	V	22.83		
					H	23.06		
	Middle	15	0	H	V	22.58	38.45	Pass
					H	22.81		
				E1	V	23.00		
					H	22.93		
				E2	V	23.22		
					H	22.24		
	Highest	15	0	H	V	22.44	38.45	Pass
					H	22.13		
				E1	V	21.49		
					H	22.27		
				E2	V	22.36		
					H	22.59		

EUT mode	Channel	RB Size	RB Offset	EUT Pol.	Antenna Pol.	ERP(dBm)	Limit (dBm)	Result
LTE Band 5 (5MHz) QPSK	Lowest	25	0	H	V	22.18	38.45	Pass
					H	23.25		
				E1	V	23.19		
					H	21.65		
				E2	V	22.84		
					H	22.25		
	Middle	25	0	H	V	22.63	38.45	Pass
					H	22.58		
				E1	V	21.72		
					H	22.99		
				E2	V	23.38		
					H	22.85		
	Highest	25	0	H	V	22.65	38.45	Pass
					H	23.35		
				E1	V	22.54		
					H	22.13		
				E2	V	22.23		
					H	22.87		

EUT mode	Channel	RB Size	RB Offset	EUT Pol.	Antenna Pol.	ERP(dBm)	Limit (dBm)	Result
LTE Band 5 (10MHz) QPSK	Lowest	50	0	H	V	23.53	38.45	Pass
					H	23.54		
				E1	V	23.08		
					H	21.54		
				E2	V	21.67		
					H	23.04		
	Middle	50	0	H	V	21.49	38.45	Pass
					H	23.57		
				E1	V	22.82		
					H	22.97		
				E2	V	22.97		
					H	21.89		
	Highest	50	0	H	V	21.67	38.45	Pass
					H	21.83		
				E1	V	21.73		
					H	22.81		
				E2	V	22.67		
					H	22.81		

EUT mode	Channel	RB Size	RB Offset	EUT Pol.	Antenna Pol.	ERP(dBm)	Limit (dBm)	Result
LTE Band 5 (1.4MHz) 16 QAM	Lowest	6	0	H	V	23.47	38.45	Pass
					H	23.69		
				E1	V	22.14		
					H	21.90		
				E2	V	23.53		
					H	23.29		
	Middle	6	0	H	V	23.23	38.45	Pass
					H	22.53		
				E1	V	23.37		
					H	23.39		
				E2	V	22.86		
					H	22.29		
	Highest	6	0	H	V	22.48	38.45	Pass
					H	21.66		
				E1	V	22.32		
					H	22.29		
				E2	V	22.13		
					H	22.57		

EUT mode	Channel	RB Size	RB Offset	EUT Pol.	Antenna Pol.	ERP(dBm)	Limit (dBm)	Result
LTE Band 5 (3MHz) 16 QAM	Lowest	15	0	H	V	22.89	38.45	Pass
					H	21.31		
				E1	V	21.96		
					H	21.45		
				E2	V	23.04		
					H	22.66		
	Middle	15	0	H	V	22.49	38.45	Pass
					H	22.56		
				E1	V	22.93		
					H	22.20		
				E2	V	23.48		
					H	21.85		
	Highest	15	0	H	V	22.19	38.45	Pass
					H	22.36		
				E1	V	21.60		
					H	22.50		
				E2	V	23.05		
					H	21.33		

EUT mode	Channel	RB Size	RB Offset	EUT Pol.	Antenna Pol.	ERP(dBm)	Limit (dBm)	Result
LTE Band 5 (5MHz) 16 QAM	Lowest	25	0	H	V	23.37	38.45	Pass
					H	21.59		
				E1	V	22.31		
					H	22.40		
				E2	V	22.36		
					H	22.90		
	Middle	25	0	H	V	21.74	38.45	Pass
					H	22.56		
				E1	V	23.65		
					H	22.49		
				E2	V	23.26		
					H	23.64		
	Highest	25	0	H	V	21.83	38.45	Pass
					H	21.76		
				E1	V	23.49		
					H	23.49		
				E2	V	23.09		
					H	22.79		

EUT mode	Channel	RB Size	RB Offset	EUT Pol.	Antenna Pol.	ERP(dBm)	Limit (dBm)	Result
LTE Band 5 (10MHz) 16 QAM	Lowest	50	0	H	V	22.66	38.45	Pass
					H	22.81		
				E1	V	21.80		
					H	22.69		
				E2	V	21.67		
					H	22.96		
	Middle	50	0	H	V	23.61	38.45	Pass
					H	23.23		
				E1	V	22.26		
					H	21.32		
				E2	V	23.12		
					H	23.49		
	Highest	50	0	H	V	21.67	38.45	Pass
					H	22.54		
				E1	V	22.62		
					H	21.32		
				E2	V	23.41		
					H	23.41		

EUT mode	Channel	RB Size	RB Offset	EUT Pol.	Antenna Pol.	EIRP(dBm)	Limit (dBm)	Result
LTE Band 7 (5MHz) QPSK	Lowest	25	0	H	V	21.33	33.00	Pass
					H	22.56		
				E1	V	22.18		
					H	23.69		
				E2	V	23.04		
					H	23.10		
	Middle	25	0	H	V	22.20	33.00	Pass
					H	21.60		
				E1	V	22.22		
					H	22.34		
				E2	V	22.44		
					H	23.66		
	Highest	25	0	H	V	21.64	33.00	Pass
					H	22.42		
				E1	V	22.39		
					H	21.86		
				E2	V	21.57		
					H	23.22		

EUT mode	Channel	RB Size	RB Offset	EUT Pol.	Antenna Pol.	EIRP(dBm)	Limit (dBm)	Result
LTE Band 7 (10MHz) QPSK	Lowest	50	0	H	V	22.03	33.00	Pass
					H	23.11		
				E1	V	22.01		
					H	22.35		
				E2	V	22.82		
					H	22.96		
	Middle	50	0	H	V	22.67	33.00	Pass
					H	22.22		
				E1	V	22.72		
					H	22.98		
				E2	V	23.42		
					H	23.20		
	Highest	50	0	H	V	22.60	33.00	Pass
					H	23.43		
				E1	V	21.35		
					H	22.48		
				E2	V	22.44		
					H	21.58		

EUT mode	Channel	RB Size	RB Offset	EUT Pol.	Antenna Pol.	EIRP(dBm)	Limit (dBm)	Result
LTE Band 7 (15MHz) QPSK	Lowest	75	0	H	V	22.31	33.00	Pass
					H	21.97		
				E1	V	23.55		
					H	22.01		
				E2	V	22.19		
					H	22.31		
	Middle	75	0	H	V	22.09	33.00	Pass
					H	23.46		
				E1	V	23.23		
					H	23.67		
				E2	V	21.31		
					H	23.70		
	Highest	75	0	H	V	23.09	33.00	Pass
					H	22.52		
				E1	V	23.39		
					H	22.23		
				E2	V	22.53		
					H	21.81		

EUT mode	Channel	RB Size	RB Offset	EUT Pol.	Antenna Pol.	EIRP(dBm)	Limit (dBm)	Result
LTE Band 7 (20MHz) QPSK	Lowest	100	0	H	V	21.98	33.00	Pass
					H	22.98		
				E1	V	23.41		
					H	21.76		
				E2	V	22.95		
					H	22.78		
	Middle	100	0	H	V	22.90	33.00	Pass
					H	21.61		
				E1	V	22.68		
					H	21.43		
				E2	V	22.33		
					H	21.92		
	Highest	100	0	H	V	23.65	33.00	Pass
					H	23.02		
				E1	V	21.78		
					H	21.87		
				E2	V	21.69		
					H	23.51		

EUT mode	Channel	RB Size	RB Offset	EUT Pol.	Antenna Pol.	EIRP(dBm)	Limit (dBm)	Result
LTE Band 7 (5MHz) 16 QAM	Lowest	25	0	H	V	23.02	33.00	Pass
					H	21.52		
				E1	V	22.27		
					H	22.01		
				E2	V	23.11		
					H	21.69		
	Middle	25	0	H	V	23.52	33.00	Pass
					H	23.27		
				E1	V	22.49		
					H	23.15		
				E2	V	21.74		
					H	22.78		
	Highest	25	0	H	V	22.08	33.00	Pass
					H	21.53		
				E1	V	22.31		
					H	22.77		
				E2	V	22.49		
					H	22.40		

EUT mode	Channel	RB Size	RB Offset	EUT Pol.	Antenna Pol.	EIRP(dBm)	Limit (dBm)	Result
LTE Band 7 (10MHz) 16 QAM	Lowest	50	0	H	V	22.33	33.00	Pass
					H	22.35		
				E1	V	23.22		
					H	21.96		
				E2	V	22.02		
					H	21.95		
	Middle	50	0	H	V	23.25	33.00	Pass
					H	22.35		
				E1	V	22.94		
					H	23.55		
				E2	V	21.33		
					H	23.64		
	Highest	50	0	H	V	22.21	33.00	Pass
					H	23.26		
				E1	V	22.57		
					H	22.09		
				E2	V	23.65		
					H	22.47		

EUT mode	Channel	RB Size	RB Offset	EUT Pol.	Antenna Pol.	EIRP(dBm)	Limit (dBm)	Result
LTE Band 7 (15MHz) 16 QAM	Lowest	75	0	H	V	21.71	33.00	Pass
					H	21.37		
				E1	V	23.70		
					H	23.01		
				E2	V	21.97		
					H	21.94		
	Middle	75	0	H	V	22.14	33.00	Pass
					H	23.61		
				E1	V	23.48		
					H	21.98		
				E2	V	22.26		
					H	22.35		
	Highest	75	0	H	V	21.41	33.00	Pass
					H	22.45		
				E1	V	22.03		
					H	22.26		
				E2	V	23.00		
					H	21.35		

EUT mode	Channel	RB Size	RB Offset	EUT Pol.	Antenna Pol.	EIRP(dBm)	Limit (dBm)	Result
LTE Band 7 (20MHz) 16 QAM	Lowest	100	0	H	V	22.34	33.00	Pass
					H	22.37		
				E1	V	22.26		
					H	23.26		
				E2	V	23.65		
					H	23.20		
	Middle	100	0	H	V	22.35	33.00	Pass
					H	23.13		
				E1	V	23.16		
					H	22.33		
				E2	V	23.54		
					H	21.55		
	Highest	100	0	H	V	22.37	33.00	Pass
					H	21.32		
				E1	V	23.07		
					H	22.08		
				E2	V	22.89		
					H	21.47		

EUT mode	Channel	RB Size	RB Offset	EUT Pol.	Antenna Pol.	EIRP(dBm)	Limit (dBm)	Result
LTE Band 12 (1.4MHz) QPSK	Lowest	6	0	H	V	21.68	33.00	Pass
					H	22.11		
				E1	V	23.43		
					H	22.31		
				E2	V	22.47		
					H	22.46		
	Middle	6	0	H	V	23.38	33.00	Pass
					H	21.86		
				E1	V	22.82		
					H	22.04		
				E2	V	22.89		
					H	23.57		
	Highest	6	0	H	V	23.62	33.00	Pass
					H	22.37		
				E1	V	22.59		
					H	21.80		
				E2	V	23.31		
					H	22.48		

EUT mode	Channel	RB Size	RB Offset	EUT Pol.	Antenna Pol.	EIRP(dBm)	Limit (dBm)	Result
LTE Band 12 (3MHz) QPSK	Lowest	15	0	H	V	22.34	33.00	Pass
					H	23.25		
				E1	V	23.08		
					H	21.32		
				E2	V	23.60		
					H	22.18		
	Middle	15	0	H	V	23.31	33.00	Pass
					H	21.39		
				E1	V	22.49		
					H	22.38		
				E2	V	23.30		
					H	22.87		
	Highest	15	0	H	V	21.83	33.00	Pass
					H	22.80		
				E1	V	21.60		
					H	22.93		
				E2	V	22.88		
					H	23.35		

EUT mode	Channel	RB Size	RB Offset	EUT Pol.	Antenna Pol.	EIRP(dBm)	Limit (dBm)	Result
LTE Band 12 (5MHz) QPSK	Lowest	25	0	H	V	21.74	33.00	Pass
					H	21.48		
				E1	V	23.15		
					H	23.02		
				E2	V	22.77		
					H	22.34		
	Middle	25	0	H	V	22.57	33.00	Pass
					H	22.18		
				E1	V	23.41		
					H	21.97		
				E2	V	22.44		
					H	22.85		
	Highest	25	0	H	V	22.66	33.00	Pass
					H	22.27		
				E1	V	21.67		
					H	21.90		
				E2	V	22.88		
					H	21.60		

EUT mode	Channel	RB Size	RB Offset	EUT Pol.	Antenna Pol.	EIRP(dBm)	Limit (dBm)	Result
LTE Band 12 (10MHz) QPSK	Lowest	50	0	H	V	22.16	33.00	Pass
					H	21.56		
				E1	V	22.12		
					H	23.04		
				E2	V	22.04		
					H	21.77		
	Middle	50	0	H	V	21.38	33.00	Pass
					H	23.50		
				E1	V	23.16		
					H	21.40		
				E2	V	22.37		
					H	22.84		
	Highest	50	0	H	V	23.54	33.00	Pass
					H	22.06		
				E1	V	22.18		
					H	22.96		
				E2	V	23.34		
					H	21.33		

EUT mode	Channel	RB Size	RB Offset	EUT Pol.	Antenna Pol.	EIRP(dBm)	Limit (dBm)	Result
LTE Band 12 (1.4MHz) 16QAM	Lowest	6	0	H	V	21.48	33.00	Pass
					H	22.50		
				E1	V	23.13		
					H	23.49		
				E2	V	23.34		
					H	22.78		
	Middle	6	0	H	V	23.40	33.00	Pass
					H	23.34		
				E1	V	21.99		
					H	23.42		
				E2	V	21.49		
					H	22.69		
	Highest	6	0	H	V	21.66	33.00	Pass
					H	22.32		
				E1	V	21.47		
					H	22.32		
				E2	V	21.98		
					H	23.22		

EUT mode	Channel	RB Size	RB Offset	EUT Pol.	Antenna Pol.	EIRP(dBm)	Limit (dBm)	Result
LTE Band 12 (3MHz) 16QAM	Lowest	15	0	H	V	22.46	33.00	Pass
					H	23.49		
				E1	V	23.38		
					H	23.15		
				E2	V	22.35		
					H	21.84		
	Middle	15	0	H	V	22.98	33.00	Pass
					H	22.17		
				E1	V	22.83		
					H	23.40		
				E2	V	22.33		
					H	22.84		
	Highest	15	0	H	V	21.99	33.00	Pass
					H	22.38		
				E1	V	22.94		
					H	22.23		
				E2	V	22.51		
					H	23.70		

EUT mode	Channel	RB Size	RB Offset	EUT Pol.	Antenna Pol.	EIRP(dBm)	Limit (dBm)	Result
LTE Band 12 (5MHz) 16QAM	Lowest	25	0	H	V	22.52	33.00	Pass
					H	23.44		
				E1	V	23.08		
					H	21.56		
				E2	V	22.30		
					H	22.36		
	Middle	25	0	H	V	21.37	33.00	Pass
					H	21.55		
				E1	V	22.27		
					H	22.54		
				E2	V	22.95		
					H	21.95		
	Highest	25	0	H	V	23.48	33.00	Pass
					H	21.50		
				E1	V	21.97		
					H	21.57		
				E2	V	21.71		
					H	22.39		

EUT mode	Channel	RB Size	RB Offset	EUT Pol.	Antenna Pol.	EIRP(dBm)	Limit (dBm)	Result
LTE Band 12 (10MHz) 16QAM	Lowest	50	0	H	V	22.57	33.00	Pass
					H	21.32		
				E1	V	21.53		
					H	23.38		
				E2	V	23.21		
					H	23.39		
	Middle	50	0	H	V	23.53	33.00	Pass
					H	22.66		
				E1	V	22.19		
					H	22.63		
				E2	V	21.74		
					H	23.21		
	Highest	50	0	H	V	23.54	33.00	Pass
					H	21.86		
				E1	V	21.69		
					H	21.43		
				E2	V	21.79		
					H	22.23		

EUT mode	Channel	RB Size	RB Offset	EUT Pol.	Antenna Pol.	EIRP(dBm)	Limit (dBm)	Result
LTE Band 13 (5MHz) QPSK	Lowest	25	0	H	V	23.03	34.77	Pass
					H	21.81		
				E1	V	22.35		
					H	23.27		
				E2	V	22.52		
					H	22.53		
	Middle	25	0	H	V	23.29	34.77	Pass
					H	21.63		
				E1	V	22.55		
					H	22.14		
				E2	V	22.15		
					H	21.45		
	Highest	25	0	H	V	22.73	34.77	Pass
					H	22.99		
				E1	V	21.95		
					H	23.18		
				E2	V	21.63		
					H	23.55		

EUT mode	Channel	RB Size	RB Offset	EUT Pol.	Antenna Pol.	EIRP(dBm)	Limit (dBm)	Result
LTE Band 13 (10MHz) QPSK	Middle	50	0	H	V	22.21	34.77	Pass
					H	23.65		
				E1	V	22.84		
					H	21.72		
				E2	V	23.19		
					H	22.94		

EUT mode	Channel	RB Size	RB Offset	EUT Pol.	Antenna Pol.	EIRP(dBm)	Limit (dBm)	Result
LTE Band 13 (5MHz) 16QAM	Lowest	25	0	H	V	22.41	34.77	Pass
					H	21.84		
				E1	V	21.87		
					H	23.60		
				E2	V	23.31		
					H	21.41		
	Middle	25	0	H	V	23.65	34.77	Pass
					H	23.45		
				E1	V	21.31		
					H	22.25		
				E2	V	23.23		
					H	22.38		
	Highest	25	0	H	V	21.46	34.77	Pass
					H	21.56		
				E1	V	22.36		
					H	23.15		
				E2	V	23.32		
					H	22.10		

EUT mode	Channel	RB Size	RB Offset	EUT Pol.	Antenna Pol.	EIRP(dBm)	Limit (dBm)	Result
LTE Band 13 (10MHz) 16QAM	Middle	50	0	H	V	22.02	34.77	Pass
					H	22.29		
				E1	V	23.16		
					H	22.41		
				E2	V	22.18		
					H	22.11		

EUT mode	Channel	RB Size	RB Offset	EUT Pol.	Antenna Pol.	EIRP(dBm)	Limit (dBm)	Result
LTE Band 41 (5MHz) QPSK	Lowest	25	0	H	V	22.37	33.00	Pass
					H	22.91		
				E1	V	23.60		
					H	22.79		
				E2	V	23.45		
					H	22.40		
	Middle	25	0	H	V	22.03	33.00	Pass
					H	22.83		
				E1	V	22.41		
					H	22.60		
				E2	V	22.12		
					H	21.91		
	Highest	25	0	H	V	21.60	33.00	Pass
					H	21.91		
				E1	V	23.48		
					H	23.57		
				E2	V	21.92		
					H	23.11		

EUT mode	Channel	RB Size	RB Offset	EUT Pol.	Antenna Pol.	EIRP(dBm)	Limit (dBm)	Result
LTE Band 41 (10MHz) QPSK	Lowest	50	0	H	V	23.63	33.00	Pass
					H	21.90		
				E1	V	21.44		
					H	23.33		
				E2	V	23.27		
					H	23.11		
	Middle	50	0	H	V	21.41	33.00	Pass
					H	22.70		
				E1	V	21.45		
					H	23.19		
				E2	V	22.66		
					H	23.65		
	Highest	50	0	H	V	23.40	33.00	Pass
					H	22.61		
				E1	V	22.96		
					H	23.63		
				E2	V	21.71		
					H	22.17		

EUT mode	Channel	RB Size	RB Offset	EUT Pol.	Antenna Pol.	EIRP(dBm)	Limit (dBm)	Result
LTE Band 41 (15MHz) QPSK	Lowest	75	0	H	V	21.92	33.00	Pass
					H	22.14		
				E1	V	22.14		
					H	22.01		
				E2	V	22.76		
					H	21.61		
	Middle	75	0	H	V	22.05	33.00	Pass
					H	23.27		
				E1	V	21.80		
					H	23.40		
				E2	V	21.38		
					H	22.66		
	Highest	75	0	H	V	21.76	33.00	Pass
					H	23.59		
				E1	V	21.82		
					H	21.93		
				E2	V	23.23		
					H	22.61		

EUT mode	Channel	RB Size	RB Offset	EUT Pol.	Antenna Pol.	EIRP(dBm)	Limit (dBm)	Result
LTE Band 41 (20MHz) QPSK	Lowest	100	0	H	V	23.38	33.00	Pass
					H	22.53		
				E1	V	23.47		
					H	23.18		
				E2	V	22.25		
					H	22.93		
	Middle	100	0	H	V	22.12	33.00	Pass
					H	23.50		
				E1	V	21.57		
					H	21.64		
				E2	V	23.27		
					H	23.42		
	Highest	100	0	H	V	22.49	33.00	Pass
					H	23.41		
				E1	V	22.44		
					H	22.61		
				E2	V	21.61		
					H	22.42		

EUT mode	Channel	RB Size	RB Offset	EUT Pol.	Antenna Pol.	EIRP(dBm)	Limit (dBm)	Result
LTE Band 41 (5MHz) 16 QAM	Lowest	25	0	H	V	21.62	33.00	Pass
					H	21.53		
				E1	V	21.93		
					H	22.99		
				E2	V	22.36		
					H	23.69		
	Middle	25	0	H	V	23.14	33.00	Pass
					H	23.67		
				E1	V	21.37		
					H	21.32		
				E2	V	23.57		
					H	23.08		
	Highest	25	0	H	V	23.36	33.00	Pass
					H	23.39		
				E1	V	23.69		
					H	23.49		
				E2	V	22.72		
					H	22.53		

EUT mode	Channel	RB Size	RB Offset	EUT Pol.	Antenna Pol.	EIRP(dBm)	Limit (dBm)	Result
LTE Band 41 (10MHz) 16 QAM	Lowest	50	0	H	V	22.18	33.00	Pass
					H	22.54		
				E1	V	22.19		
					H	22.85		
				E2	V	22.79		
					H	23.04		
	Middle	50	0	H	V	23.09	33.00	Pass
					H	22.95		
				E1	V	23.27		
					H	22.28		
				E2	V	22.79		
					H	21.99		
	Highest	50	0	H	V	21.66	33.00	Pass
					H	22.66		
				E1	V	22.65		
					H	22.24		
				E2	V	21.69		
					H	22.36		

EUT mode	Channel	RB Size	RB Offset	EUT Pol.	Antenna Pol.	EIRP(dBm)	Limit (dBm)	Result
LTE Band 41 (15MHz) 16 QAM	Lowest	75	0	H	V	22.07	33.00	Pass
					H	21.67		
				E1	V	22.22		
					H	22.73		
				E2	V	21.64		
					H	22.64		
	Middle	75	0	H	V	21.60	33.00	Pass
					H	23.24		
				E1	V	21.46		
					H	23.66		
				E2	V	22.36		
					H	21.38		
	Highest	75	0	H	V	23.24	33.00	Pass
					H	21.83		
				E1	V	22.38		
					H	21.58		
				E2	V	22.47		
					H	21.80		

EUT mode	Channel	RB Size	RB Offset	EUT Pol.	Antenna Pol.	EIRP(dBm)	Limit (dBm)	Result
LTE Band 41 (20MHz) 16 QAM	Lowest	100	0	H	V	23.37	33.00	Pass
					H	22.01		
				E1	V	22.82		
					H	21.67		
				E2	V	22.43		
					H	23.66		
	Middle	100	0	H	V	21.72	33.00	Pass
					H	22.70		
				E1	V	23.34		
					H	22.99		
				E2	V	21.76		
					H	22.51		
	Highest	100	0	H	V	21.37	33.00	Pass
					H	22.05		
				E1	V	22.90		
					H	23.28		
				E2	V	23.17		
					H	23.32		

4.9 Field strength of spurious radiation measurement

Test Requirement:	FCC part22.913(a), FCC part24.238(a) and FCC part27.53
Test Method:	ANSI C63.26:2015
Limit:	Band 2/4/5/12/17/26:-13dBm Band 7/41:-25dBm
Test setup:	Below 1GHz 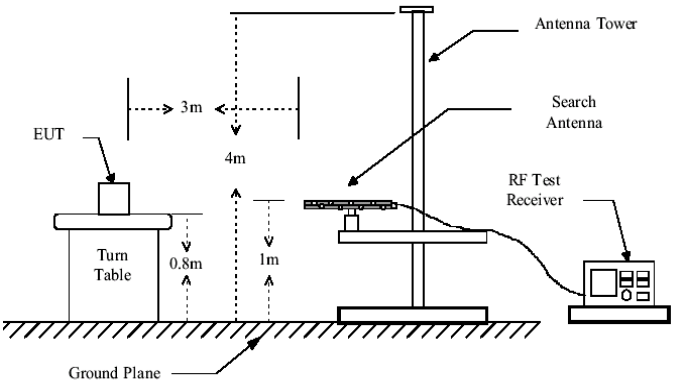 Above 1GHz 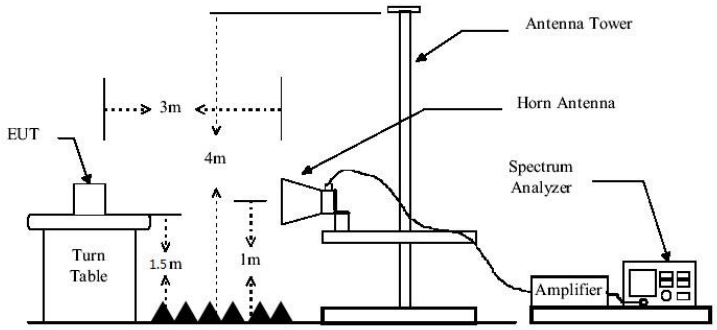 Substituted method: 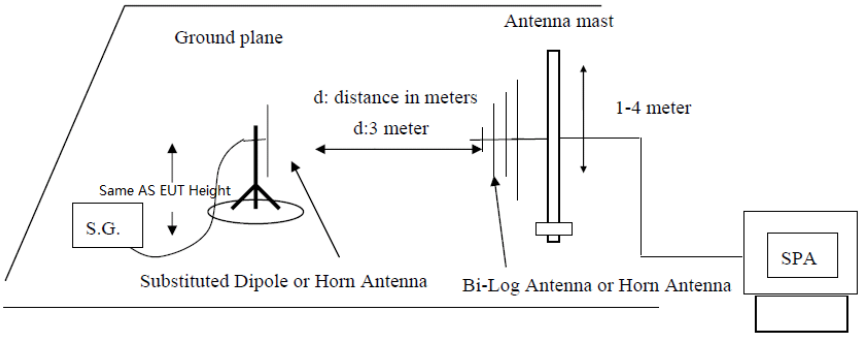

Test Procedure:	1. The EUT was placed on an non-conductive turntable using a non-conductive support. The radiated emission at the fundamental frequency was measured at 3 m with a test antenna and EMI spectrum analyzer. 2. During the tests, the antenna height and the EUT azimuth were varied in order to identify the maximum level of emissions from the EUT. This maximization process was repeated with the EUT positioned in each of its three orthogonal orientations. 3. The frequency range up to tenth harmonic was investigated for each of three fundamental frequency (low, middle and high channels). Once spurious emission was identified, the power of the emission was determined using the substitution method. 4. The spurious emissions attenuation was calculated as the difference between radiated power at the fundamental frequency and the spurious emissions frequency. ERP / EIRP = S.G. output (dBm) + Antenna Gain(dB/dBi) – Cable Loss (dB) 5. Compliance with the provisions of part 27 paragraphs (c)(3) and (c)(4) of this section is based on the use of measurement instrumentation such that the reading taken with any resolution bandwidth setting should be adjusted to indicate spectral energy in a 6.25 kHz segment.
Test Instruments:	Refer to section 3 for details
Test mode:	Refer to section 4.1 for details
Test results:	Pass

Measurement Data:

QPSK Mode:

Test mode:	LTE Band 2(1.4MHz)		Test channel:	Lowest
Frequency (MHz)	Spurious Emission		Limit (dBm)	Result
	Polarization	Level (dBm)		
3701.02	V	-37.36	-13.00	Pass
5552.92	V	-33.93		
7401.51	V	-35.34		
9252.11	V	-34.95		
11102.96	V	-35.94		
3701.89	H	-35.30	-13.00	Pass
5551.83	H	-33.60		
7401.15	H	-33.90		
9253.04	H	-35.43		
11104.52	H	-37.19		
Test mode:	**LTE Band 2(1.4MHz)**		**Test channel:**	**Middle**
Frequency (MHz)	Spurious Emission		Limit (dBm)	Result
	Polarization	Level (dBm)		
3760.12	V	-35.11	-13.00	Pass
5639.68	V	-34.38		
7518.90	V	-34.56		
9399.46	V	-34.27		
11279.02	V	-36.83		
3760.32	H	-36.79	-13.00	Pass
5639.40	H	-34.01		
7518.84	H	-35.99		
9399.00	H	-34.58		
11278.98	H	-36.01		
Test mode:	**LTE Band 2(1.4MHz)**		**Test channel:**	**Highest**
Frequency (MHz)	Spurious Emission		Limit (dBm)	Result
	Polarization	Level (dBm)		
3818.72	V	-36.41	-13.00	Pass
5727.85	V	-34.25		
7635.60	V	-34.91		
9545.31	V	-34.26		
11455.44	V	-35.79		
3817.36	H	-36.42	-13.00	Pass
5727.63	H	-34.87		
7637.10	H	-35.75		
9545.86	H	-35.03		
11455.21	H	-37.18		

Remark：

1. The emission behaviour belongs to narrowband spurious emission, all modes investigated and only worst case is reported.
2. Remark”---“ means that the emission level is too low (20dB lower than the limit) to be measured
3. The emission levels of below 1 GHz are very lower (20dB lower than the limit) than the limit and not show in test report.

Test mode:	LTE Band 4(1.4MHz)		Test channel:	Lowest
Frequency (MHz)	Spurious Emission		Limit (dBm)	Result
	Polarization	Level (dBm)		
3421.14	V	-30.88	-13.00	Pass
5131.24	V	-29.93		
6840.89	V	-28.24		
8554.57	V	-26.60		
10263.99	V	-30.07		
3422.00	H	-26.82	-13.00	Pass
5132.47	H	-28.89		
6843.32	H	-28.62		
8551.73	H	-26.82		
10264.09	H	-31.17		
Test mode:	LTE Band 4(1.4MHz)		Test channel:	Middle
Frequency (MHz)	Spurious Emission		Limit (dBm)	Result
	Polarization	Level (dBm)		
3465.17	V	-32.14	-13.00	Pass
5198.04	V	-31.86		
6929.28	V	-28.51		
8661.60	V	-29.33		
10394.73	V	-28.30		
3464.91	H	-28.21	-13.00	Pass
5197.82	H	-26.41		
6929.86	H	-28.41		
8661.52	H	-29.99		
10394.45	H	-28.77		
Test mode:	LTE Band 4(1.4MHz)		Test channel:	Highest
Frequency (MHz)	Spurious Emission		Limit (dBm)	Result
	Polarization	Level (dBm)		
3507.79	V	-32.14	-13.00	Pass
5263.66	V	-29.61		
7016.95	V	-29.18		
8771.43	V	-30.53		
10524.72	V	-27.87		
3509.74	H	-27.12	-13.00	Pass
5264.12	H	-28.10		
7016.67	H	-29.30		
8771.86	H	-29.49		
10526.05	H	-27.50		

Remark：

1. The emission behaviour belongs to narrowband spurious emission, all modes investigated and only worst case is reported.
2. Remark”---“ means that the emission level is too low (20dB lower than the limit) to be measured
3. The emission levels of below 1 GHz are very lower (20dB lower than the limit) than the limit and not show in test report.

Test mode:	LTE Band 5(1.4MHz)		Test channel:	Lowest
Frequency (MHz)	Spurious Emission		Limit (dBm)	Result
	Polarization	Level (dBm)		
1649.75	V	-31.52	-13.00	Pass
2477.09	V	-28.19		
3303.28	V	-27.54		
4128.27	V	-29.64		
4953.93	V	-27.34		
1650.48	H	-29.23	-13.00	Pass
2477.46	H	-27.63		
3303.52	H	-30.34		
4127.21	H	-29.04		
4953.03	H	-30.83		
Test mode:	LTE Band 5(1.4MHz)		Test channel:	Middle
Frequency (MHz)	Spurious Emission		Limit (dBm)	Result
	Polarization	Level (dBm)		
1672.81	V	-34.23	-13.00	Pass
2510.59	V	-26.61		
3346.80	V	-29.13		
4184.81	V	-31.89		
5020.74	V	-31.74		
1672.92	H	-32.28	-13.00	Pass
2511.56	H	-27.63		
3348.87	H	-30.39		
4185.63	H	-29.99		
5021.50	H	-26.94		
Test mode:	LTE Band 5(1.4MHz)		Test channel:	Highest
Frequency (MHz)	Spurious Emission		Limit (dBm)	Result
	Polarization	Level (dBm)		
1696.27	V	-35.04	-13.00	Pass
2543.34	V	-29.07		
3393.03	V	-27.61		
4240.03	V	-30.55		
5089.76	V	-27.75		
1697.02	H	-29.51	-13.00	Pass
2544.00	H	-28.78		
3393.06	H	-31.54		
4240.43	H	-30.22		
5088.76	H	-29.43		

Remark：

1. The emission behaviour belongs to narrowband spurious emission, all modes investigated and only worst case is reported.
2. Remark”---“ means that the emission level is too low (20dB lower than the limit) to be measured
3. The emission levels of below 1 GHz are very lower (20dB lower than the limit) than the limit and not show in test report.

Test mode:	LTE Band 7(5MHz)		Test channel:	Lowest
Frequency (MHz)	Spurious Emission		Limit (dBm)	Result
	Polarization	Level (dBm)		
5005.33	V	-33.19	-25.00	Pass
7506.22	V	-27.98		
10010.73	V	-27.34		
12512.23	V	-27.70		
15014.59	V	-29.84		
5004.21	H	-25.70	-25.00	Pass
7508.21	H	-28.42		
10010.94	H	-32.11		
12512.89	H	-29.80		
15014.98	H	-30.31		
Test mode:	LTE Band 7(5MHz)		Test channel:	Middle
Frequency (MHz)	Spurious Emission		Limit (dBm)	Result
	Polarization	Level (dBm)		
5069.82	V	-31.70	-25.00	Pass
7603.72	V	-30.10		
10140.10	V	-27.94		
12675.44	V	-28.32		
15209.76	V	-30.60		
5068.33	H	-27.75	-25.00	Pass
7605.31	H	-27.31		
10140.22	H	-29.92		
12674.19	H	-27.35		
15208.52	H	-29.71		
Test mode:	LTE Band 7(5MHz)		Test channel:	Highest
Frequency (MHz)	Spurious Emission		Limit (dBm)	Result
	Polarization	Level (dBm)		
5135.43	V	-34.83	-25.00	Pass
7701.59	V	-29.33		
10268.57	V	-29.66		
12836.17	V	-31.01		
15404.20	V	-29.72		
5134.61	H	-30.93	-25.00	Pass
7701.08	H	-32.16		
10269.07	H	-30.20		
12836.35	H	-30.32		
15405.22	H	-29.76		

Remark：

1. The emission behaviour belongs to narrowband spurious emission, all modes investigated and only worst case is reported.
2. Remark”---“ means that the emission level is too low (20dB lower than the limit) to be measured
3. The emission levels of below 1 GHz are very lower (20dB lower than the limit) than the limit and not show in test report.

Test mode:	LTE Band 12(1.4MHz)		Test channel:	Lowest
Frequency (MHz)	Spurious Emission		Limit (dBm)	Result
	Polarization	Level (dBm)		
1399.39	V	-32.47	-13.00	Pass
2098.19	V	-30.88		
2797.09	V	-27.28		
3497.72	V	-30.32		
4196.85	V	-27.30		
1397.89	H	-30.12	-13.00	Pass
2099.23	H	-29.25		
2797.63	H	-27.67		
3497.73	H	-27.51		
4196.87	H	-28.29		
Test mode:	LTE Band 12(1.4MHz)		Test channel:	Middle
Frequency (MHz)	Spurious Emission		Limit (dBm)	Result
	Polarization	Level (dBm)		
1413.26	V	-33.54	-13.00	Pass
2121.73	V	-28.30		
2829.35	V	-28.99		
3538.08	V	-28.23		
4245.48	V	-28.65		
1413.47	H	-28.41	-13.00	Pass
2121.49	H	-29.57		
2830.83	H	-27.95		
3538.05	H	-25.78		
4243.79	H	-28.90		
Test mode:	LTE Band 12(1.4MHz)		Test channel:	Highest
Frequency (MHz)	Spurious Emission		Limit (dBm)	Result
	Polarization	Level (dBm)		
1430.65	V	-29.93	-13.00	Pass
2145.13	V	-26.01		
2861.63	V	-32.42		
3576.65	V	-28.57		
4291.90	V	-29.03		
1431.30	H	-28.99	-13.00	Pass
2145.45	H	-27.42		
2861.36	H	-29.35		
3575.42	H	-29.20		
4291.23	H	-29.68		

Remark：

1 The emission behaviour belongs to narrowband spurious emission, all modes investigated and only worst case is reported.
2 Remark”---“ means that the emission level is too low (20dB lower than the limit) to be measured
3 The emission levels of below 1 GHz are very lower (20dB lower than the limit) than the limit and not show in test report.

Test mode:	LTE Band 13(5MHz)		Test channel:	Lowest
Frequency (MHz)	Spurious Emission		Limit (dBm)	Result
	Polarization	Level (dBm)		
1586.55	V	-43.92	-40.00	Pass
770.47	V	-39.34	-35.00	Pass
801.20	V	-38.40	-35.00	Pass
5003.37	V	-34.44	-13.00	Pass
7507.57	V	-31.07		
10009.68	V	-26.79		
12510.76	V	-30.30		
15014.31	V	-28.14		
1585.97	H	-43.94	-40.00	Pass
769.54	H	-39.39	-35.00	Pass
800.60	H	-39.53	-35.00	Pass
5004.92	H	-29.02	-13.00	Pass
7506.96	H	-29.34		
10010.38	H	-31.72		
12510.94	H	-29.64		
15013.71	H	-27.77		
Test mode:	LTE Band 13(5MHz)		Test channel:	Middle
Frequency (MHz)	Spurious Emission		Limit (dBm)	Result
	Polarization	Level (dBm)		
1592.67	V	-31.33	-40.00	Pass
769.82	V	-40.01	-35.00	Pass
801.06	V	-40.06	-35.00	Pass
5070.36	V	-27.87	-13.00	Pass
7604.36	V	-30.67		
10140.35	V	-27.17		
12673.86	V	-27.74		
15208.64	V	-30.40		
1593.15	H	-43.51	-40.00	Pass
769.76	H	-39.02	-35.00	Pass
799.77	H	-39.63	-35.00	Pass
5067.93	H	-29.79	-13.00	Pass
7603.14	H	-28.12		
10139.18	H	-29.61		
12675.51	H	-26.45		
15209.06	H	-28.80		

Test mode:	LTE Band 13(5MHz)		Test channel:	Highest
Frequency (MHz)	Spurious Emission		Limit (dBm)	Result
	Polarization	Level (dBm)		
1578.92	V	-43.16	-40.00	Pass
769.58	V	-37.87	-35.00	Pass
798.76	V	-38.62	-35.00	Pass
5134.73	V	-33.66	-13.00	Pass
7703.07	V	-30.83		
10268.50	V	-29.10		
12837.66	V	-30.95		
15403.87	V	-29.73		
1579.62	H	-45.88	-40.00	Pass
770.24	H	-40.19	-35.00	Pass
800.03	H	-38.27	-35.00	Pass
5135.51	H	-33.22	-13.00	Pass
7702.02	H	-30.57		
10268.16	H	-31.66		
12836.65	H	-27.71		
15404.14	H	-29.88		

Remark：

1 The emission behaviour belongs to narrowband spurious emission, all modes investigated and only worst case is reported.
2 Remark”---“ means that the emission level is too low (20dB lower than the limit) to be measured
3 The emission levels of below 1 GHz are very lower (20dB lower than the limit) than the limit and not show in test report.

Test mode:	LTE Band 41(5MHz)		Test channel:	Lowest
Frequency (MHz)	Spurious Emission		Limit (dBm)	Result
	Polarization	Level (dBm)		
4997.26	V	-38.09	-25.00	Pass
7494.67	V	-35.87		
9994.03	V	-33.11		
12493.24	V	-32.43		
14990.00	V	-33.17		
4996.34	H	-37.74	-25.00	Pass
7495.78	H	-35.74		
9992.76	H	-35.01		
12492.72	H	-33.43		
14989.39	H	-33.45		
Test mode:	LTE Band 41(5MHz)		Test channel:	Middle
Frequency (MHz)	Spurious Emission		Limit (dBm)	Result
	Polarization	Level (dBm)		
5185.03	V	-35.31	-25.00	Pass
7778.68	V	-33.82		
10371.02	V	-32.98		
12963.67	V	-34.33		
15558.78	V	-36.35		
5184.18	H	-34.07	-25.00	Pass
7779.01	H	-35.95		
10371.51	H	-37.39		
12964.70	H	-35.69		
15557.22	H	-35.30		
Test mode:	LTE Band 41(5MHz)		Test channel:	Highest
Frequency (MHz)	Spurious Emission		Limit (dBm)	Result
	Polarization	Level (dBm)		
5373.57	V	-33.16	-25.00	Pass
8060.83	V	-36.05		
10749.25	V	-35.20		
13437.95	V	-36.31		
16124.27	V	-36.17		
5375.28	H	-34.63	-25.00	Pass
8062.00	H	-38.22		
10750.02	H	-32.46		
13438.36	H	-33.97		
16125.22	H	-37.35		

Remark：

1 The emission behaviour belongs to narrowband spurious emission, all modes investigated and only worst case is reported.
2 Remark”---“ means that the emission level is too low (20dB lower than the limit) to be measured
3 The emission levels of below 1 GHz are very lower (20dB lower than the limit) than the limit and not show in test report.

16 QAM Mode:

Test mode:	LTE Band 2 (1.4MHz)		Test channel:	Lowest
Frequency (MHz)	Spurious Emission		Limit (dBm)	Result
	Polarization	Level (dBm)		
3701.20	V	-34.85	-13.00	Pass
5550.69	V	-29.34		
7403.27	V	-34.23		
9253.03	V	-25.84		
11102.61	V	-34.63		
3701.00	H	-31.15	-13.00	Pass
5552.87	H	-36.17		
7401.72	H	-25.58		
9252.83	H	-33.74		
11104.27	H	-26.91		
Test mode:	LTE Band 2 (1.4MHz)		Test channel:	Middle
Frequency (MHz)	Spurious Emission		Limit (dBm)	Result
	Polarization	Level (dBm)		
3758.86	V	-29.88	-13.00	Pass
5640.98	V	-29.13		
7518.46	V	-27.78		
9399.33	V	-30.69		
11279.54	V	-29.47		
3760.18	H	-29.15	-13.00	Pass
5639.82	H	-30.94		
7520.31	H	-29.24		
9400.07	H	-29.31		
11278.64	H	-29.08		
Test mode:	LTE Band 2 (1.4MHz)		Test channel:	Highest
Frequency (MHz)	Spurious Emission		Limit (dBm)	Result
	Polarization	Level (dBm)		
3818.18	V	-31.96	-13.00	Pass
5726.15	V	-30.08		
7635.42	V	-27.86		
9546.42	V	-28.04		
11456.00	V	-29.32		
3817.51	H	-31.44	-13.00	Pass
5727.71	H	-28.15		
7636.04	H	-28.09		
9546.29	H	-32.30		
11456.03	H	-29.09		

Remark：

1 The emission behaviour belongs to narrowband spurious emission, all modes investigated and only worst case is reported.
2 Remark”---“ means that the emission level is too low (20dB lower than the limit) to be measured
3 The emission levels of below 1 GHz are very lower (20dB lower than the limit) than the limit and not show in test report.

Test mode:	LTE Band 4(1.4MHz)		Test channel:	Lowest
Frequency (MHz)	Spurious Emission		Limit (dBm)	Result
	Polarization	Level (dBm)		
3420.04	V	-31.23	-13.00	Pass
5132.61	V	-31.04		
6842.80	V	-27.33		
8553.99	V	-29.15		
10262.61	V	-29.84		
3420.55	H	-31.06	-13.00	Pass
5132.93	H	-26.57		
6841.18	H	-29.67		
8553.41	H	-30.39		
10265.01	H	-28.86		
Test mode:	LTE Band 4(1.4MHz)		Test channel:	Middle
Frequency (MHz)	Spurious Emission		Limit (dBm)	Result
	Polarization	Level (dBm)		
3465.25	V	-27.36	-13.00	Pass
5196.10	V	-26.49		
6928.30	V	-29.31		
8662.67	V	-30.27		
10394.93	V	-27.72		
3464.15	H	-27.92	-13.00	Pass
5198.05	H	-31.52		
6929.67	H	-30.63		
8662.95	H	-28.32		
10393.81	H	-29.39		
Test mode:	LTE Band 4(1.4MHz)		Test channel:	Highest
Frequency (MHz)	Spurious Emission		Limit (dBm)	Result
	Polarization	Level (dBm)		
3490.94	V	-27.20	-13.00	Pass
5234.62	V	-30.09		
6981.82	V	-32.15		
8724.43	V	-30.80		
10472.42	V	-30.13		
3489.56	H	-29.86	-13.00	Pass
5235.71	H	-31.65		
6979.82	H	-28.28		
8726.11	H	-27.66		
10472.12	H	-30.02		

Remark：

1 The emission behaviour belongs to narrowband spurious emission, all modes investigated and only worst case is reported.

2 Remark”---“ means that the emission level is too low (20dB lower than the limit) to be measured

3 The emission levels of below 1 GHz are very lower (20dB lower than the limit) than the limit and not show in test report.

Test mode:	LTE Band 5(1.4MHz)		Test channel:	Lowest
Frequency (MHz)	Spurious Emission		Limit (dBm)	Result
	Polarization	Level (dBm)		
1651.82	V	-33.06	-13.00	Pass
2476.40	V	-34.11		
3300.96	V	-30.72		
4128.57	V	-33.97		
4954.29	V	-29.16		
1650.65	H	-32.30	-13.00	Pass
2475.78	H	-30.68		
3303.05	H	-33.72		
4129.02	H	-33.13		
4953.19	H	-31.08		
Test mode:	LTE Band 5(1.4MHz)		Test channel:	Middle
Frequency (MHz)	Spurious Emission		Limit (dBm)	Result
	Polarization	Level (dBm)		
1672.90	V	-30.18	-13.00	Pass
2510.71	V	-32.53		
3348.11	V	-29.61		
4183.71	V	-30.91		
5021.87	V	-35.24		
1672.64	H	-33.11	-13.00	Pass
2509.39	H	-31.57		
3347.37	H	-31.29		
4183.72	H	-31.41		
5022.75	H	-30.42		
Test mode:	LTE Band 5(1.4MHz)		Test channel:	Highest
Frequency (MHz)	Spurious Emission		Limit (dBm)	Result
	Polarization	Level (dBm)		
1697.28	V	-30.53	-13.00	Pass
2545.64	V	-30.74		
3391.56	V	-29.84		
4239.90	V	-33.16		
5089.92	V	-29.98		
1696.60	H	-32.66	-13.00	Pass
2543.50	H	-33.52		
3394.18	H	-30.38		
4241.51	H	-33.42		
5090.09	H	-30.92		

Remark：

1 The emission behaviour belongs to narrowband spurious emission, all modes investigated and only worst case is reported.
2 Remark”---“ means that the emission level is too low (20dB lower than the limit) to be measured
3 The emission levels of below 1 GHz are very lower (20dB lower than the limit) than the limit and not show in test report.

Test mode:	LTE Band 7(5MHz)		Test channel:	Lowest
Frequency (MHz)	Spurious Emission		Limit (dBm)	Result
	Polarization	Level (dBm)		
5004.41	V	-32.67	-25.00	Pass
7508.10	V	-33.72		
10008.77	V	-33.24		
12511.42	V	-33.94		
15015.45	V	-34.34		
5005.23	H	-32.29	-25.00	Pass
7507.34	H	-30.92		
10009.01	H	-32.69		
12511.12	H	-30.44		
15015.57	H	-29.21		
Test mode:	LTE Band 7(5MHz)		Test channel:	Middle
Frequency (MHz)	Spurious Emission		Limit (dBm)	Result
	Polarization	Level (dBm)		
5069.90	V	-32.70	-25.00	Pass
7605.62	V	-32.07		
10139.30	V	-30.13		
12673.21	V	-30.95		
15208.31	V	-31.52		
5069.43	H	-29.30	-25.00	Pass
7603.13	H	-30.54		
10139.81	H	-34.91		
12673.83	H	-32.65		
15210.06	H	-34.69		
Test mode:	LTE Band 7(5MHz)		Test channel:	Highest
Frequency (MHz)	Spurious Emission		Limit (dBm)	Result
	Polarization	Level (dBm)		
5135.06	V	-32.27	-25.00	Pass
7703.20	V	-32.49		
10268.18	V	-34.59		
12837.66	V	-31.54		
15404.31	V	-32.75		
5134.37	H	-32.71	-25.00	Pass
7701.49	H	-29.91		
10270.61	H	-33.02		
12836.96	H	-32.89		
15404.07	H	-30.25		

Remark：

1 The emission behaviour belongs to narrowband spurious emission, all modes investigated and only worst case is reported.
2 Remark”---“ means that the emission level is too low (20dB lower than the limit) to be measured
3 The emission levels of below 1 GHz are very lower (20dB lower than the limit) than the limit and not show in test report.

Test mode:	LTE Band 12 (1.4MHz)		Test channel:	Lowest
Frequency (MHz)	Spurious Emission		Limit (dBm)	Result
	Polarization	Level (dBm)		
1399.33	V	-33.35	-13.00	Pass
2098.80	V	-30.86		
2796.99	V	-31.59		
3498.22	V	-31.30		
4198.42	V	-30.57		
1397.64	H	-29.76	-13.00	Pass
2097.79	H	-31.48		
2799.79	H	-33.00		
3497.63	H	-32.72		
4196.37	H	-30.61		
Test mode:	LTE Band 12 (1.4MHz)		Test channel:	Middle
Frequency (MHz)	Spurious Emission		Limit (dBm)	Result
	Polarization	Level (dBm)		
1413.94	V	-31.20	-13.00	Pass
2122.08	V	-32.80		
2830.60	V	-30.12		
3536.34	V	-33.72		
4243.62	V	-32.05		
1413.50	H	-30.35	-13.00	Pass
2123.54	H	-31.34		
2830.51	H	-33.64		
3535.70	H	-31.48		
4243.31	H	-31.31		
Test mode:	LTE Band 12 (1.4MHz)		Test channel:	Highest
Frequency (MHz)	Spurious Emission		Limit (dBm)	Result
	Polarization	Level (dBm)		
1430.72	V	-33.36	-13.00	Pass
2144.52	V	-34.38		
2861.09	V	-32.61		
3575.77	V	-30.10		
4291.36	V	-29.64		
1431.56	H	-31.04	-13.00	Pass
2146.10	H	-32.49		
2859.64	H	-34.59		
3574.77	H	-31.74		
4292.03	H	-35.18		

Remark：

1 The emission behaviour belongs to narrowband spurious emission, all modes investigated and only worst case is reported.
2 Remark”---“ means that the emission level is too low (20dB lower than the limit) to be measured
3 The emission levels of below 1 GHz are very lower (20dB lower than the limit) than the limit and not show in test report.

Test mode:	LTE Band 13(5MHz)		Test channel:	Lowest
Frequency (MHz)	Spurious Emission		Limit (dBm)	Result
	Polarization	Level (dBm)		
1587.34	V	-44.24	-40.00	Pass
771.21	V	-38.43	-35.00	Pass
801.40	V	-39.25	-35.00	Pass
5004.02	V	-33.67	-13.00	Pass
7507.82	V	-31.79		
10008.72	H	-26.37		
12510.33	H	-30.22		
15013.14	H	-29.20		
1585.52	V	-45.00	-40.00	Pass
768.93	V	-39.56	-35.00	Pass
801.11	V	-39.45	-35.00	Pass
5004.25	V	-28.92	-13.00	Pass
7507.31	V	-28.12		
10010.41	H	-31.21		
12510.65	H	-29.32		
15013.16	H	-27.21		
Test mode:	LTE Band 13(5MHz)		Test channel:	Middle
Frequency (MHz)	Spurious Emission		Limit (dBm)	Result
	Polarization	Level (dBm)		
1591.78	V	-30.55	-40.00	Pass
769.78	V	-38.92	-35.00	Pass
800.82	V	-39.35	-35.00	Pass
5070.06	V	-27.29	-13.00	Pass
7604.55	V	-30.28		
10140.48	H	-26.60		
12675.01	H	-28.04		
15208.07	H	-30.34		
1592.45	V	-44.33	-40.00	Pass
770.27	V	-38.81	-35.00	Pass
800.49	V	-38.78	-35.00	Pass
5069.09	V	-28.88	-13.00	Pass
7604.18	V	-27.74		
10138.91	H	-29.62		
12676.48	H	-27.23		
15209.66	H	-28.24		

Test mode:	LTE Band 13(5MHz)		Test channel:	Highest
Frequency (MHz)	Spurious Emission		Limit (dBm)	Result
	Polarization	Level (dBm)		
1577.97	V	-44.08	-40.00	Pass
770.50	V	-36.98	-35.00	Pass
797.94	V	-37.56	-35.00	Pass
5134.08	V	-34.73	-13.00	Pass
7702.15	V	-31.16		
10269.22	H	-29.58		
12837.87	H	-31.72		
15403.01	H	-30.97		
1580.33	V	-45.65	-40.00	Pass
769.03	V	-41.07	-35.00	Pass
799.72	V	-38.61	-35.00	Pass
5136.65	V	-32.68	-13.00	Pass
7703.23	V	-31.52		
10268.58	H	-31.96		
12837.02	H	-28.65		
15405.05	H	-30.13		

Remark：

1 The emission behaviour belongs to narrowband spurious emission, all modes investigated and only worst case is reported.
2 Remark”---“ means that the emission level is too low (20dB lower than the limit) to be measured
3 The emission levels of below 1 GHz are very lower (20dB lower than the limit) than the limit and not show in test report.

Test mode:	LTE Band 41 (5MHz)		Test channel:	Lowest
Frequency (MHz)	Spurious Emission		Limit (dBm)	Result
	Polarization	Level (dBm)		
4997.27	V	-36.74	-25.00	Pass
7494.65	V	-35.83		
9992.68	V	-37.06		
12493.10	V	-38.35		
14990.83	V	-33.84		
4996.41	H	-35.94	-25.00	Pass
7494.90	H	-37.40		
9992.90	H	-32.76		
12491.58	H	-35.22		
14989.61	H	-33.74		
Test mode:	LTE Band 41 (5MHz)		Test channel:	Middle
Frequency (MHz)	Spurious Emission		Limit (dBm)	Result
	Polarization	Level (dBm)		
5186.72	V	-32.95	-25.00	Pass
7777.72	V	-34.60		
10372.25	V	-37.01		
12965.89	V	-32.92		
15557.00	V	-33.76		
5185.84	H	-34.72	-25.00	Pass
7778.35	H	-36.71		
10370.50	H	-36.89		
12964.53	H	-35.36		
15557.42	H	-34.15		
Test mode:	LTE Band 41 (5MHz)		Test channel:	Highest
Frequency (MHz)	Spurious Emission		Limit (dBm)	Result
	Polarization	Level (dBm)		
5375.39	V	-37.03	-25.00	Pass
8062.87	V	-32.80		
10750.41	V	-36.73		
13435.42	V	-34.48		
16124.01	V	-37.94		
5374.65	H	-33.05	-25.00	Pass
8061.65	H	-37.58		
10749.86	H	-34.95		
13436.75	H	-34.02		
16125.24	H	-35.68		

Remark：

1 The emission behaviour belongs to narrowband spurious emission, all modes investigated and only worst case is reported.
2 Remark”---“ means that the emission level is too low (20dB lower than the limit) to be measured
3 The emission levels of below 1 GHz are very lower (20dB lower than the limit) than the limit and not show in test report.

4.10 Frequency stability V.S. Temperature measurement

Test Requirement:	FCC Part2.1055(a)(1)(b)
Test Method:	ANSI C63.26:2015
Limit:	2.5ppm(Part 22) Within the authorized bands of operation(Part 24, Part 27)
Test setup:	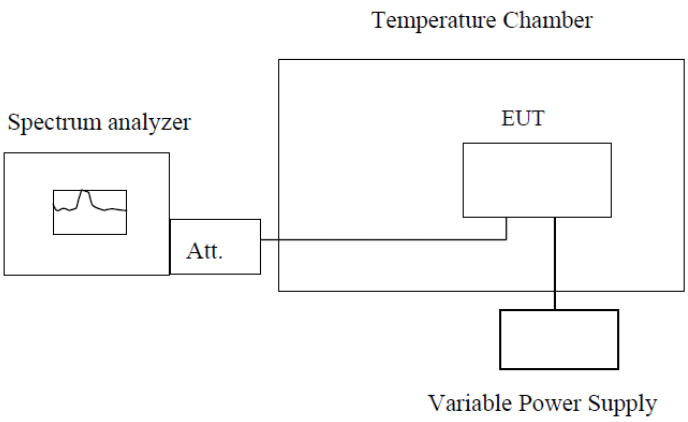 **Note :** Measurement setup for testing on Antenna connector
Test procedure:	1. The equipment under test was connected to an external DC power supply and input rated voltage. 2. RF output was connected to a frequency counter or spectrum analyzer via feed through attenuators. 3. The EUT was placed inside the temperature chamber. 4. Set the spectrum analyzer RBW low enough to obtain the desired frequency resolution and measure EUT 25°C operating frequency as reference frequency. 5. Turn EUT off and set the chamber temperature to –20°C. After the temperature stabilized for approximately 30 minutes recorded the frequency. 6. Repeat step measure with 10°C increased per stage until the highest temperature of +50°C reached.
Test Instruments:	Refer to section 3 for details
Test mode:	Refer to section 4.1 for details
Test results:	Pass
Remark:	If all frequencies stability are comply with the lower limit, then all results can be considered qualified

Measurement Data

Reference Frequency: LTE Band 2 Middle channel=18900 channel=1880MHz					
Power supplied (Vdc)	Temperature (°C)	Frequency error		Limit (ppm)	Result
		Hz	ppm		
24	-20	18	0.0094	Within the authorized bands	Pass
	-10	-18	-0.0097		
	0	24	0.0130		
	10	-23	-0.0124		
	20	19	0.0103		
	30	13	0.0068		
	40	-4	-0.0019		
	50	10	0.0055		
	60	14	0.0076		

Reference Frequency: LTE Band 4 Middle channel=20175 channel=1732.5MHz					
Power supplied (Vdc)	Temperature (°C)	Frequency error		Limit (ppm)	Result
		Hz	ppm		
24	-20	19	0.0109	2.5	Pass
	-10	-21	-0.0121		
	0	21	0.0118		
	10	-27	-0.0158		
	20	18	0.0104		
	30	13	0.0077		
	40	-1	-0.0007		
	50	8	0.0047		
	60	17	0.0096		

Reference Frequency: LTE Band 5 Middle channel=20175 channel=836.5MHz					
Power supplied (Vdc)	Temperature (°C)	Frequency error		Limit (ppm)	Result
		Hz	ppm		
24	-20	18	0.0217	2.5	Pass
	-10	-9	-0.0110		
	0	19	0.0232		
	10	-4	-0.0050		
	20	17	0.0206		
	30	17	0.0209		
	40	16	0.0193		
	50	9	0.0108		
	60	12	0.0144		

Reference Frequency: LTE Band 7 Middle channel=21100 channel=2535MHz					
Power supplied (Vdc)	Temperature (°C)	Frequency error		Limit (ppm)	Result
		Hz	ppm		
24	-20	20	0.0079	Within the authorized bands	Pass
	-10	-10	-0.0040		
	0	22	0.0087		
	10	-4	-0.0016		
	20	23	0.0089		
	30	13	0.0051		
	40	14	0.0056		
	50	7	0.0027		
	60	17	0.0065		

Reference Frequency: LTE Band 12 Middle channel=23095 channel=707.5MHz					
Power supplied (Vdc)	Temperature (°C)	Frequency error		Limit (ppm)	Result
		Hz	ppm		
24	-20	23	0.0331	2.5	Pass
	-10	-8	-0.0110		
	0	21	0.0294		
	10	2	0.0033		
	20	17	0.0246		
	30	15	0.0206		
	40	12	0.0173		
	50	6	0.0079		
	60	8	0.0111		

Reference Frequency: LTE Band 13 Middle channel=23230 channel=782MHz					
Power supplied (Vdc)	Temperature (°C)	Frequency error		Limit (ppm)	Result
		Hz	ppm		
24	-20	14	0.0183	Within the authorized bands	Pass
	-10	-18	-0.0234		
	0	18	0.0233		
	10	-1	-0.0009		
	20	15	0.0198		
	30	12	0.0158		
	40	13	0.0171		
	50	16	0.0210		
	60	9	0.0121		

Reference Frequency: LTE Band 41 Middle channel=40620 channel=2593MHz					
Power supplied (Vdc)	Temperature (°C)	Frequency error		Limit (ppm)	Result
		Hz	ppm		
24	-20	19	0.0074	Within the authorized bands	Pass
	-10	-13	-0.0050		
	0	20	0.0076		
	10	-8	-0.0031		
	20	13	0.0050		
	30	16	0.0060		
	40	21	0.0081		
	50	8	0.0031		
	60	18	0.0070		

4.11 Frequency stability V.S. Voltage measurement

Test Requirement:	FCC Part2.1055(d)(1)(2)
Test Method:	ANSI C63.26:2015
Limit:	2.5ppm Band II & Band VII should be within authorized band.
Test setup:	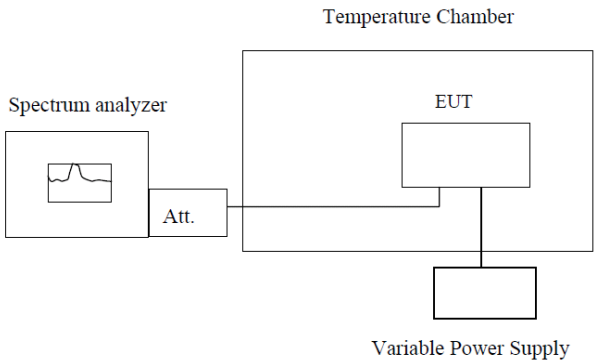 **Note :** Measurement setup for testing on Antenna connector
Test procedure:	1. Set chamber temperature to 20°C. Use a variable DC power source to power the EUT and set the voltage to rated voltage. 2. Set the spectrum analyzer RBW low enough to obtain the desired frequency resolution and recorded the frequency. 3. Reduce the input voltage to specified extreme voltage variation (+/-15%) and endpoint, record the maximum frequency change.
Test Instruments:	Refer to section 3 for details
Test mode:	Refer to section 4.1 for details
Test results:	Pass
Remark:	1. Manufacturer specified the battery operating end point voltage is 3.6VDC, max voltage is 4.2VDC. 2. If all frequencies stability are comply with the lower limit, then all results can be considered qualified

Measurement Data

Reference Frequency: LTE Band 2 Middle channel=18900 channel=1880MHz					
Temperature (°C)	Power supplied (Vdc)	Frequency error		Limit (ppm)	Result
		Hz	ppm		
25	9	25	0.0133	within authorized band	Pass
	24	-16	-0.0085		
	36	22	0.0115		
Reference Frequency: LTE Band 4 Middle channel=20175 channel=1732.5MHz					
Temperature (°C)	Power supplied (Vdc)	Frequency error		Limit (ppm)	Result
		Hz	ppm		
25	9	23	0.0134	2.5	Pass
	24	-12	-0.0070		
	36	17	0.0096		
Reference Frequency: LTE Band 5 Middle channel=20175 channel=836.5MHz					
Temperature (°C)	Power supplied (Vdc)	Frequency error		Limit (ppm)	Result
		Hz	ppm		
25	9	10	0.0121	2.5	Pass
	24	-3	-0.0035		
	36	28	0.0337		
Reference Frequency: LTE Band 7 Middle channel=21100 channel=2535MHz					
Temperature (°C)	Power supplied (Vdc)	Frequency error		Limit (ppm)	Result
		Hz	ppm		
25	9	13	0.0053	within authorized band	Pass
	24	-9	-0.0037		
	36	19	0.0075		

Reference Frequency: LTE Band 12 Middle channel=23095 channel=707.5MHz					
Temperature (°C)	Power supplied (Vdc)	Frequency error		Limit (ppm)	Result
		Hz	ppm		
25	9	13	0.0182	2.5	Pass
	24	-16	-0.0232		
	36	18	0.0251		
Reference Frequency: LTE Band 13 Middle channel=23230 channel=782MHz					
Temperature (°C)	Power supplied (Vdc)	Frequency error		Limit (ppm)	Result
		Hz	ppm		
25	9	16	0.0208	within authorized band	Pass
	24	-19	-0.0242		
	36	23	0.0289		
Reference Frequency: LTE Band 41 Middle channel=40620 channel=2593MHz					
Temperature (°C)	Power supplied (Vdc)	Frequency error		Limit (ppm)	Result
		Hz	ppm		
25	9	27	0.0104	within authorized band	Pass
	24	-18	-0.0069		
	36	21	0.0082		

4.12 Test Setup Photo

Radiated Emission

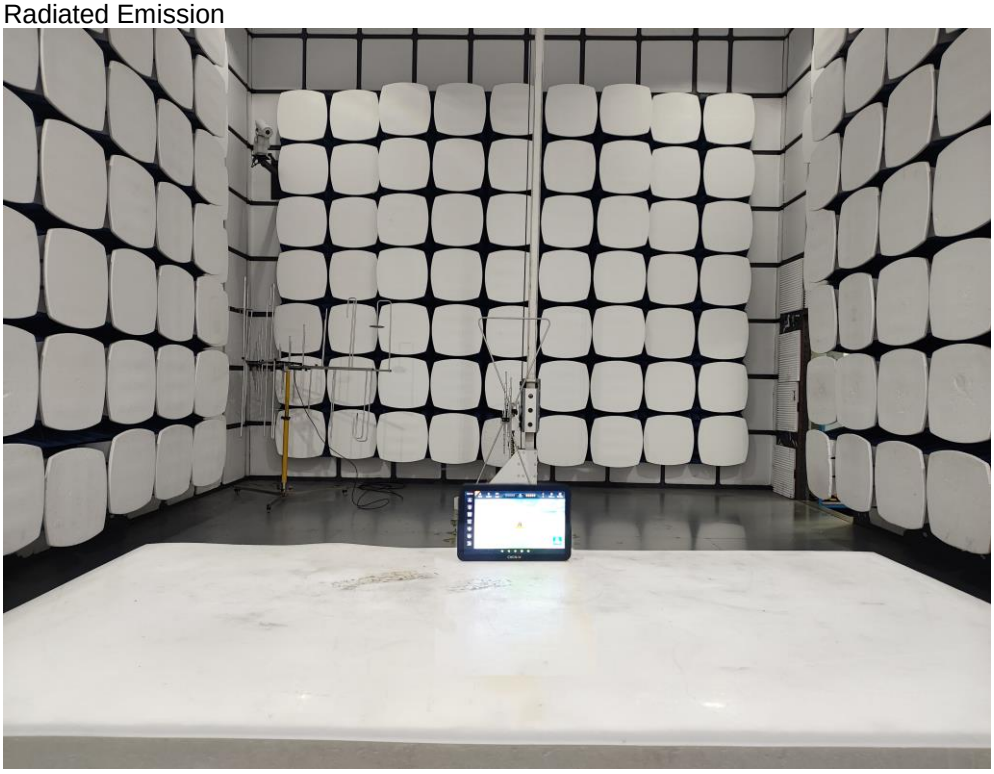

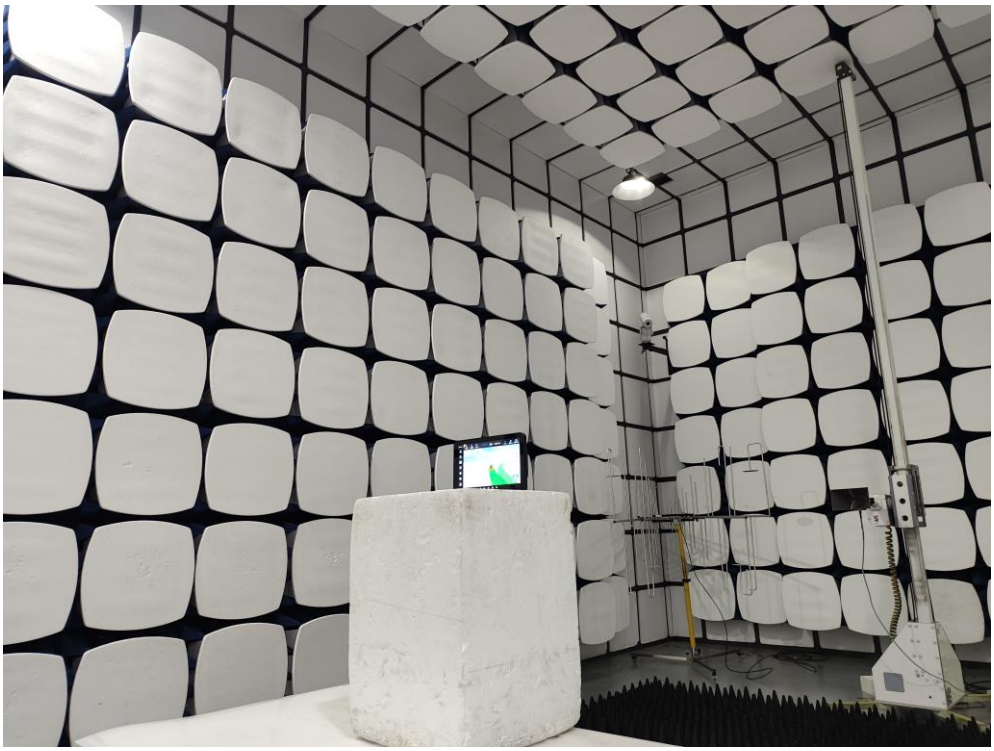

-------END OF REPORT-------