FCC TEST REPORT

FCC ID: SY4-A02078

On Behalf of

Shanghai Huace Navigation Technology Ltd.

Tablet

Model No.: CB-H10 Pro (T)

Prepared for	:	Shanghai Huace Navigation Technology Ltd.
Address	:	577 Songying Road, Qingpu District, 201706 Shanghai, China

Prepared By	:	Shenzhen Alpha Product Testing Co., Ltd.
Address	:	Building i, No.2, Lixin Road, Fuyong Street, Bao'an District, 518103, Shenzhen, Guangdong, China

Report Number	:	A2604056-C03-R05
Date of Receipt	:	May 08, 2026
Date of Test	:	May 09, 2026 – October 14, 2026
Date of Report	:	October 14, 2026
Version Number	:	V0
Result		**Pass**

ALPHA's reports is using a digital certificate that is trusted on Adobe's official server. If there is no digital certificate or the digital certificate shows damaged in your report. Please do not accept the report.
E-mail: service@a-lab.cn Tel: 400-8300-895 Website: http://www.a-lab.cn

TABLE OF CONTENTS

Description Page

1. GENERAL INFORMATION ----------5
1.1. Description of Device (EUT)----------5
1.2. Accessories of Device (EUT)----------6
1.3. Tested Supporting System Details----------6
1.4.Block Diagram of connection between EUT and simulators----------6
2. SUMMARY OF MEASUREMENT ----------7
3.1. Summary of test result----------7
3.2. Equipment Type ----------8
3.3. Channel list ----------8
3.4. Test Conditions and channel ----------10
3.5. Measurement Uncertainty (95% confidence levels, k=2)----------10
3. EMC EQUIPMENT LIST ----------11
4. DFS PARAMETERS ----------15
4.1. DFS Parameters----------15
4.2. DFS –Test Results ----------21
5. Setup Photo ----------29

TEST REPORT DECLARATION

Applicant	:	Shanghai Huace Navigation Technology Ltd.
Address	:	577 Songying Road, Qingpu District, 201706 Shanghai, China
Manufacturer	:	Shanghai Huace Navigation Technology Ltd.
Address	:	577 Songying Road, Qingpu District, 201706 Shanghai, China
EUT Description	:	Tablet
		(A) Model No. : CB-H10 Pro (T)
		(B) Trademark : CHCNAV

Measurement Standard Used:

FCC Part 15 Subpart E, FCC KDB 905462 D02

The device described above is tested by Shenzhen Alpha Product Testing Co., Ltd. to determine the maximum emission levels emanating from the device. The maximum emission levels are compared to the FCC limits. The test results are contained in this test report and Shenzhen Alpha Product Testing Co., Ltd. is assumed of full responsibility for the accuracy and completeness of these tests.

After the test, our opinion is that EUT compliance with the requirement of the above standards.

This report applies to above tested sample only. This report shall not be reproduced in parts without written approval of Shenzhen Alpha Product Testing Co., Ltd.

Tested by (name + signature).....…..:	Yannis Wen Project Engineer	Yannis Wen
Approved by (name + signature)…....:	Alan Fan Project Manager	Alan Fan
Date of issue……..:	October 14, 2026	

Revision History

Revision	Issue Date	Revisions	Revised By
V0	October 14, 2026	Initial released Issue	Yannis Wen

1. GENERAL INFORMATION

1.1. Description of Device (EUT)

EUT Name	:	Tablet
Model No.	:	CB-H10 Pro (T)
DIFF.	:	N/A
Power supply	:	DC 12V from battery

Radio Technology	:	5G WIFI
Operation Frequency	:	802.11a/n(HT20)/ac(VHT20): 5180~5240MHz; 5260-5320MHz; 5500-5700MHz; 5745~5825MHz 802.11n(HT40)/ac(VHT40): 5190~5230MHz; 5270-5310MHz; 5510-5670MHz; 5755~5795MHz 802.11ac(VHT80): 5210MHz, 5290MHz, 5530MHz, 5775MHz
Channel separation	:	20MHz for 802.11a/ 802.11ac(VHT20)/ 802.11n(HT20) 40MHz for 802.11ac(VHT40)/ 802.11n(HT40) 80MHz for 802.11ac(VHT80)
Modulation technology:	:	IEEE 802.11n: OFDM (64QAM, 16QAM, QPSK, BPSK) IEEE 802.11a: OFDM (64QAM, 16QAM, QPSK, BPSK) IEEE 802.11ac: OFDM (64QAM, 16QAM, QPSK, BPSK)
Antenna Type	:	Internal antenna U-NII-1:max gain 0.88dBi U-NII-2A:max gain 1.80dBi U-NII-2C:max gain 2.62dBi U-NII-3:max gain 2.18dBi (Antenna information is provided by applicant.)
Software version	:	Android 14
Hardware version	:	V0.3
Intend use environment	:	Residential, commercial and light industrial environment

1.2. Accessories of Device (EUT)

Accessories : /

Manufacturer : /

Model : /

Ratings : /

1.3. Tested Supporting System Details

No.	Description	Manufacturer	Model	Serial Number	Certification Or SDOC
1	Notebook	ACER	ZQT	N/A	N/A
2	Router AX1500	Xiaomi	RD12	FCC ID: 2AIMRRD12	Auxiliary
Note: Master device: FCC ID: 2AIMRRD12					

1.4.Block Diagram of connection between EUT and simulators

2. SUMMARY OF MEASUREMENT

3.1. Summary of test result

UNII	Bandwidth and Channel	Description	Measured	Limit	Result
U-NII-2A 5250-5350MHz	80MHz (CH58) 5290MHz	Channel Move Time	0.0997	10 sec	Pass
		Channel Closing Transmission time	<200ms +3.6 ms (aggregate)	200 ms + aggregate of 60 ms over remaining 10 s period	Pass
		Non-Occupancy Period and Client Beacon Test	No transmission or Beacons occurred	30 minutes	Pass
U-NII-2C 5500-5700MHz	80MHz (CH106) 5530MHz	Channel Move Time	0.1109	10 sec	Pass
		Channel Closing Transmission time	<200ms +3.6 ms (aggregate)	200 ms + aggregate of 60 ms over remaining 10 s period	Pass
		Non-Occupancy Period and Client Beacon Test	No transmission or Beacons occurred	30 minutes	Pass

Note: 1. since the product is client without radar detection function, only Channel Move Time, Channel Closing Transmission Time and Non-Occupancy Period Test are required to be performed.

2. The conclusion of this test report is judged by actual test data without considering measurement uncertainty.

3.2. Equipment Type

☐ Master Device

☒ Client Device(No Ad-Hoc mode, without radar detection function and TPC)

3.3. Channel list

U-NII-2A:

Tested mode, channel, and data rate information			
Mode	Data rate (Mbps) see Note	Channel	Frequency (MHz)
IEEE 802.11a	6	CH52	5260
	6	CH56	5280
	6	CH64	5320
IEEE 802.11n HT20	6.5	CH52	5260
	6.5	CH56	5280
	6.5	CH64	5320
IEEE 802.11n HT40	13.5	CH54	5270
	13.5	CH62	5310
IEEE 802.11ac VHT20	6.5	CH52	5260
	6.5	CH56	5280
	6.5	CH64	5320
IEEE 802.11ac VHT40	13.5	CH54	5270
	13.5	CH62	5310
IEEE 802.11ac VHT80	433.3	CH58	5290
Note: According exploratory test and product specification EUT will have maximum output power in those data rate, so those data rate were used for all test.			

U-NII-2C:

Tested mode, channel, and data rate information			
Mode	Data rate (Mbps) see Note	Channel	Frequency (MHz)
IEEE 802.11a	6	CH100	5500
	6	CH116	5580
	6	CH140	5700
IEEE 802.11n HT20	6.5	CH100	5500
	6.5	CH116	5580
	6.5	CH140	5700
IEEE 802.11n HT40	13.5	CH102	5510
	13.5	CH134	5670
IEEE 802.11ac VHT20	6.5	CH100	5500
	6.5	CH116	5580
	6.5	CH140	5700
IEEE 802.11ac VHT40	13.5	CH102	5510
	13.5	CH134	5670
IEEE 802.11ac VHT80	433.3	CH106	5530
Note: According exploratory test and product specification EUT will have maximum output power in those data rate, so those data rate were used for all test.			

3.4. Test Conditions and channel

Temperature range	21-25℃
Humidity range	40-75%
Pressure range	86-106kPa

Channel List for 802.11ac80		
Band Frequency	EUT Channel	Test Frequency (MHz)
Band II	CH58	5290
Band III	CH106	5530

Note: (1) The measurements are performed at the lowest available channels.

3.5. Measurement Uncertainty (95% confidence levels, k=2)

Item	**Uncertainty**
Uncertainty for Power point Conducted Emissions Test	1.63dB
Uncertainty for Radiation Emission test in 3m chamber (below 30MHz)	3.5dB
Uncertainty for Radiation Emission test in 3m chamber (30MHz to 1GHz)	3.74dB(Polarize: V)
	3.76dB(Polarize: H)
Uncertainty for Radiation Emission test in 3m chamber (1GHz to 25GHz)	3.77dB(Polarize: V)
	3.80dB(Polarize: H)
Uncertainty for radio frequency	5.06×10^{-8}GHz
Uncertainty for conducted RF Power	0.40dB
Uncertainty for temperature	0.2℃
Uncertainty for humidity	1%
Uncertainty for DC and low frequency voltages	0.06%
Uncertainty for Power Spectral Density	0.39dB
Uncertainty for Occupied-Bandwidth	968Hz

3. EMC EQUIPMENT LIST

Equipment	Manufacturer	Model No.	Firmware version	Serial No.	Last Cal.	Cal. Due day
9*6*6 anechoic chamber	CHENYU	9*6*6	/	N/A	2025.03.09	2029.03.08
4*4*3 Shielded room	CHENYU	4*4*3	/	N/A	2025.03.09	2029.03.08
Spectrum analyzer	ROHDE&SCHWARZ	FSV40-N	2.3	102137	2025.08.04	2026.08.03
Spectrum analyzer	Agilent	N9020A	A.14.16	MY499100060	2025.08.04	2026.08.03
Spectrum analyzer	Keysight	N9020A	A.19.05	MY54500254	2025.08.04	2026.08.03
Spectrum analyzer	ROHDE&SCHWARZ	FSU	4.71.SP5	200002	2025.08.04	2026.08.03
CMW500	ROHDE&SCHWARZ	CMW500	V 3.7.22	1201.0002K50-117239-sM	2025.08.04	2026.08.03
UXM 5G Base Wireless Test Platform	Keysight	E5175E	1.8.1.29082(NR)(LTE)	MY62226130	2026.03.03	2027.03.02
Test Receiver	ROHDE&SCHWARZ	ESR	2.28 SP1	1316.3003K03-102082-Wa	2025.08.04	2026.08.03
Test Receiver	ROHDE&SCHWARZ	ESCI	4.42 SP1	101165	2025.08.04	2026.08.03
Bilog Antenna	SCHWARZBECK	VULB 9168	/	VULB 9168#627	2025.08.11	2027.08.10
Horn Antenna	SCHWARZBECK	BBHA 9120 D	/	2106	2025.08.11	2027.08.10
Loop Antenna	SCHWARZBECK	FMZB 1519B	/	00128	2025.08.11	2027.08.10
RF Cable	Resenberger	Cable 1	/	RE1	2025.08.04	2026.08.03
RF Cable	Resenberger	Cable 2	/	RE2	2025.08.04	2026.08.03
RF Cable	Resenberger	Cable 3	/	CE1	2025.08.04	2026.08.03
Amplifier	HP	HP8347A	/	2834A00455	2025.08.04	2026.08.03
Amplifier	Agilent	8449B	/	3008A02664	2025.08.04	2026.08.03
Amplifier	SKET	LNPA_0118G-45	/	SK2020010801	2025.08.04	2026.08.03
Filter/Amplifier bank unit	SKET	RSESU-HPH-LNPP18G	/	SK20190712	2025.08.04	2026.08.03
L.I.S.N.#1	SCHWARZBECK	NSLK8126	/	8126-466	2025.08.04	2026.08.03
L.I.S.N.#2	ROHDE&SCHWARZ	ENV216	/	101043	2025.08.04	2026.08.03
Pulse Limiter	SCHWARZBECK	9516F	/	9618	2025.08.04	2026.08.03
Horn Antenna	SCHWARZBECK	BBHA 9170	/	00946	2025.08.11	2027.08.10
Preamplifier	SKET	LNPA_1840-50	/	SK2018101801	2025.08.04	2026.08.03
Vector Signal Generator	Agilent	N5182A	/	MY49060042	2025.08.04	2026.08.03
Vector Signal Generator	Agilent	N5172B	2.02	MY51350397	2025.08.04	2026.08.03
Analog Signal Generator	HP	83712B	10.02	US34490219	2025.08.04	2026.08.03
Power Meter	Agilent	E4419B	/	GB40202122	2025.08.04	2026.08.03
Power Sensor	Agilent	E9300A	/	MY41496628	2025.08.04	2026.08.03
Power Sensor	Agilent	E9304A	/	MY41496815	2025.08.04	2026.08.03
Power Sensor	DARE	RPR3006W	/	15100041SNO91	2025.08.04	2026.08.03
Power Sensor	DARE	RPR3006W	/	15100041SNO92	2025.08.04	2026.08.03
Temp. & Humid.	Teelong	TL-HW408S	/	TL-20191205-	2025.07.14	2026.07.13

Chamber				01		
Electronic Thermo-Hygrometer	S.H.Qixiang	HTC-1	/	N/A	2025.08.04	2026.08.03
Switching Mode Power Supply	JUNKE	JK12010S	/	20140927-6	2025.08.04	2026.08.03
Adjustable attenuator	MWRFtest	N/A	/	N/A	N/A	N/A
10dB Attenuator	Mini-Circuits	DC-6G	/	N/A	N/A	N/A
6dB Fixed Attenuator	SKET	AP_DC01G-2W-N-6dB	/	N/A	2025.08.04	2026.08.03

Equipment	Manufacturer	Model No.	Firmware version	Serial No.	Last Cal.	Cal. Due day
9*6*6 anechoic chamber	CHENYU	9*6*6	/	N/A	2025/03/09	2029/03/08
4*4*3 Shielded room	CHENYU	4*4*3	/	N/A	2025/03/09	2029/03/08
Spectrum analyzer	ROHDE&SCHWARZ	FSV40-N	2.3	102137	2026/7/28	2027/7/27
Spectrum analyzer	Agilent	N9020A	A.14.16	MY499100060	2026/7/27	2027/7/26
Spectrum analyzer	Keysight	N9020A	A.19.05	MY54500254	2026/7/27	2027/7/26
Spectrum analyzer	ROHDE&SCHWARZ	FSU	4.71.SP5	200002	2026/7/28	2027/7/27
CMW500	ROHDE&SCHWARZ	CMW500	V 3.7.22	1201.0002K50-117239-sM	2026/7/27	2027/7/26
UXM 5G Base Wireless Test Platform	Keysight	E5175E	1.8.1.29082(NR)(LTE)	MY62226130	2026/03/03	2027/03/02
Test Receiver	ROHDE&SCHWARZ	ESR	2.28 SP1	1316.3003K03-102082-Wa	2026/7/27	2027/7/26
Test Receiver	ROHDE&SCHWARZ	ESCI	4.42 SP1	101165	2026/7/28	2027/7/27
Bilog Antenna	SCHWARZBECK	VULB 9168	/	VULB 9168#627	2025/08/11	2027/08/10
Horn Antenna	SCHWARZBECK	BBHA 9120 D	/	2106	2025/08/11	2027/08/10
Loop Antenna	SCHWARZBECK	FMZB 1519B	/	00128	2025/08/11	2027/08/10
RF Cable	Resenberger	Cable 1	/	RE1	2026/7/27	2027/7/26
RF Cable	Resenberger	Cable 2	/	RE2	2026/7/27	2027/7/26
RF Cable	Resenberger	Cable 3	/	CE1	2026/7/27	2027/7/26
Amplifier	HP	HP8347A	/	2834A00455	2026/7/28	2027/7/27
Amplifier	Agilent	8449B	/	3008A02664	2026/7/27	2027/7/26
Amplifier	SKET	LNPA_0118G-45	/	SK2020010801	2026/7/27	2027/7/26
Filter/Amplifier bank unit	SKET	RSESU-HPH-LNPP18G	/	SK20190712	2026/7/27	2027/7/26
L.I.S.N.#1	SCHWARZBECK	NSLK8126	/	8126-466	2026/7/28	2027/7/27
L.I.S.N.#2	ROHDE&SCHWARZ	ENV216	/	101043	2026/7/28	2027/7/27
Pulse Limiter	SCHWARZBECK	9516F	/	9618	2026/7/27	2027/7/26
Horn Antenna	SCHWARZBECK	BBHA 9170	/	00946	2025/8/11	2027/8/10
Preamplifier	SKET	LNPA_1840-50	/	SK2018101801	2026/7/27	2027/7/26
Vector Signal Generator	Agilent	N5182A	/	MY49060042	2026/7/28	2027/7/27
Vector Signal Generator	Agilent	N5172B	2.02	MY51350397	2026/7/27	2027/7/26

Analog Signal Generator	HP	83712B	10.02	US34490219	2026/7/27	2027/7/26
Power Meter	Agilent	E4419B	/	GB40202122	2026/7/27	2027/7/26
Power Sensor	Agilent	E9300A	/	MY41496628	2026/7/27	2027/7/26
Power Sensor	Agilent	E9304A	/	MY41496815	2026/7/27	2027/7/26
Power Sensor	DARE	RPR3006W	/	15100041SNO91	2026/7/28	2027/7/27
Power Sensor	DARE	RPR3006W	/	15100041SNO92	2026/7/28	2027/7/27
Temp. & Humid. Chamber	Teelong	TL-HW408S	/	TL-20191205-01	2026/07/07	2027/07/06
Electronic Thermo-Hygrometer	S.H.Qixiang	HTC-1	/	N/A	2026/7/31	2027/7/30
Switching Mode Power Supply	JUNKE	JK12010S	/	20140927-6	2026/7/27	2027/7/26
Adjustable attenuator	MWRFtest	N/A	/	N/A	N/A	N/A
10dB Attenuator	Mini-Circuits	DC-6G	/	N/A	N/A	N/A
6dB Fixed Attenuator	SKET	AP_DC01G-2W-N-6dB	/	N/A	2026/7/28	2027/7/27

Software Information			
Test Item	Software Name	Manufacturer	Version
RF-CE	MTS 8310	MW	V2.0.0.0

4. DFS PARAMETERS

4.1. DFS Parameters

Table 1: Applicability of DFS Requirements Prior to Use of a Channel

Requirement	Operational Mode		
	Master	**Client Without Radar Detection**	**Client With Radar Detection**
Non-Occupancy Period	Yes	Not required	Yes
DFS Detection Threshold	Yes	Not required	Yes
Channel Availability Check Time	Yes	Not required	Not required
U-NII Detection Bandwidth	Yes	Not required	Yes

Table 2: Applicability of DFS requirements during normal operation

Requirement	Operational Mode		
	Master	**Client Without Radar Detection**	**Client With Radar Detection**
DFS Detection Threshold	Yes	Not required	Yes
Channel Closing Transmission Time	Yes	Yes	Yes
Channel Move Time	Yes	Yes	Yes
U-NII Detection Bandwidth	Yes	Not required	Yes
Client Beacon Test	N/A	Yes	Yes

Additional requirements for devices with multiple bandwidth modes	Operational Mode	
	Master or Client With Radar Detection	**Client Without Radar Detection**
U-NII Detection Bandwidth and Statistical Performance Check	All BW modes must be tested	Not required
Channel Move Time and Channel Closing Transmission Time	Test using widest BW mode available	Test using the widest BW mode available for the link
All other tests	Any single BW mode	Not required
Note Frequencies selected for statistical performance check (Section 7.8.4) should include several frequencies within the radar detection bandwidth and frequencies near the edge of the radar detection bandwidth. For 802.11 devices it is suggested to select frequencies in each of the bonded 20 MHz channels and the channel center frequency.		

Table 3: DFS Detection Thresholds for Master Devices and Client Devices With Radar Detection

Maximum Transmit Power	Value (see notes 1, 2, and 3)
EIRP ≥ 200 milliwatt	-64 dBm
EIRP < 200 milliwatt and power spectral density < 10 dBm/MHz	-62 dBm
EIRP < 200 milliwatt that do not meet the power spectral density requirement	-64 dBm
Note 1: This is the level at the input of the receiver assuming a 0 dBi receive antenna. **Note 2:** Throughout these test procedures an additional 1 dB has been added to the amplitude of the test transmission waveforms to account for variations in measurement equipment. This will ensure that the test signal is at or above the detection threshold level to trigger a DFS response. **Note 3:** EIRP is based on the highest antenna gain. For MIMO devices refer to KDB Publication 662911 D01.	

The radar Detection Threshold, lowest antenna gain is the parameter of Interference radar DFS detection threshold, The Interference Detection Threshold is the (-62dBm) + (0) [dBi]+ 1 dB= -61 dBm.

Table 4: DFS Response Requirement Values

Parameter	Value
Non-occupancy period	Minimum 30 minutes
Channel Availability Check Time	60 seconds
Channel Move Time	10 seconds See Note 1.
Channel Closing Transmission Time	200 milliseconds + an aggregate of 60 milliseconds over remaining 10 second period. See Notes 1 and 2.
U-NII Detection Bandwidth	Minimum 100% of the 99% power bandwidth See Note 3.

Note 1: The instant that the *Channel Move Time* and the *Channel Closing Transmission Time* begins is as follows:

- For the Short pulse radar Test Signals this instant is the end of the *Burst*.
- For the Frequency Hopping radar Test Signal, this instant is the end of the last radar *Burst* generated.
- For the Long Pulse radar Test Signal this instant is the end of the 12 second period defining the radar transmission.

Note 2: The *Channel Closing Transmission Time* is comprised of 200 milliseconds starting at the beginning of the *Channel Move Time* plus any additional intermittent control signals required to facilitate *Channel* changes (an aggregate of 60 milliseconds) during the remainder of the 10 second period. The aggregate duration of control signals will not count quiet periods in between transmissions.

Note 3: During the *U-NII Detection Bandwidth* detection test, radar type 0 is used and for each frequency step the minimum percentage of detection is 90%. Measurements are performed with no data traffic.

Table 5 – Short Pulse Radar Test Waveforms

Radar Type	Pulse Width (µsec)	PRI (µsec)	Number of Pulses	Minimum Percentage of Successful Detection	Minimum Number of Trials
0	1	1428	18	See Note 1	See Note 1
1	1	Test A: 15 unique PRI values randomly selected from the list of 23 PRI values in Table 5a	$\text{Roundup}\left\{\left(\frac{1}{360}\right)\cdot\left(\frac{19\cdot 10^6}{\text{PRI}_{\mu\text{sec}}}\right)\right\}$	60%	30
		Test B: 15 unique PRI values randomly selected within the range of 518-3066 µsec, with a minimum increment of 1 µsec, excluding PRI values selected in Test A			
2	1-5	150-230	23-29	60%	30
3	6-10	200-500	16-18	60%	30
4	11-20	200-500	12-16	60%	30
Aggregate (Radar Types 1-4)				80%	120
Note 1: Short Pulse Radar Type 0 should be used for the detection bandwidth test, channel move time, and channel closing time tests.					

Table 5a - Pulse Repetition Intervals Values for Test A

Pulse Repetition Frequency Number	Pulse Repetition Frequency (Pulses Per Second)	Pulse Repetition Interval (Microseconds)
1	1930.5	518
2	1858.7	538
3	1792.1	558
4	1730.1	578
5	1672.2	598
6	1618.1	618
7	1567.4	638
8	1519.8	658
9	1474.9	678
10	1432.7	698
11	1392.8	718
12	1355	738
13	1319.3	758
14	1285.3	778
15	1253.1	798
16	1222.5	818
17	1193.3	838
18	1165.6	858
19	1139	878
20	1113.6	898
21	1089.3	918
22	1066.1	938
23	326.2	3066

The aggregate is the average of the percentage of successful detections of Short Pulse Radar Types 1-4. For example, the following table indicates how to compute the aggregate of percentage of successful detections.

Radar Type	Number of Trials	Number of Successful Detections	Minimum Percentage of Successful Detection
1	35	29	82.9%
2	30	18	60%
3	30	27	90%
4	50	44	88%
Aggregate (82.9% + 60% + 90% + 88%)/4 = 80.2%			

Long Pulse Radar Test Waveform

Table 6 – Long Pulse Radar Test Waveform

Radar Type	Pulse Width (µsec)	Chirp Width (MHz)	PRI (µsec)	Number of Pulses per *Burst*	Number of *Bursts*	Minimum Percentage of Successful Detection	Minimum Number of Trials
5	50-100	5-20	1000-2000	1-3	8-20	80%	30

Figure 1 provides a graphical representation of the Long Pulse Radar Test Waveform.

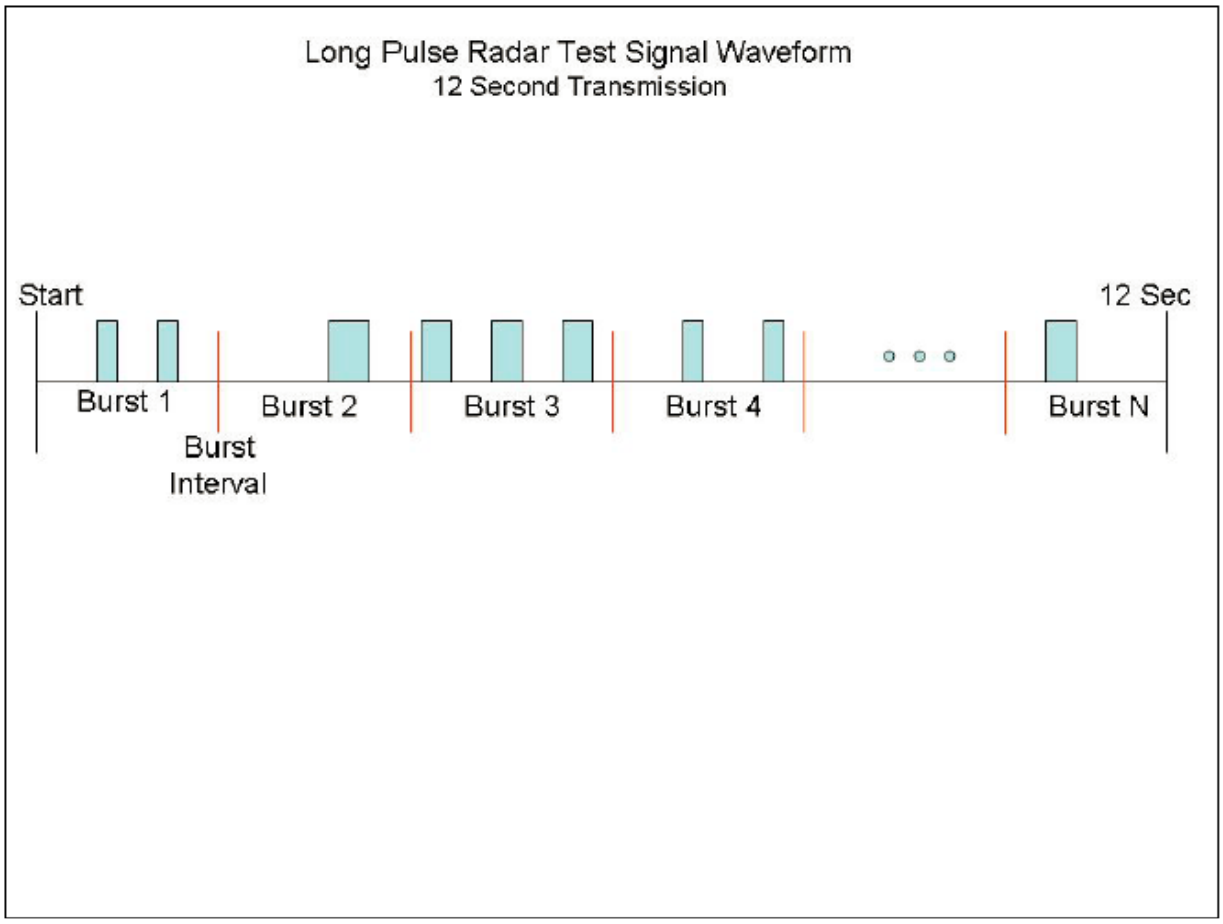

Table 7 – Frequency Hopping Radar Test Waveform

Radar Type	Pulse Width (µsec)	PRI (µsec)	Pulses per Hop	Hopping Rate (kHz)	Hopping Sequence Length (msec)	Minimum Percentage of Successful Detection	Minimum Number of Trials
6	1	333	9	0.333	300	70%	30

4.2. DFS –Test Results

4.2.1 DFS MEASUREMENT METHODS

a.DFS – CHANNEL CLOSING TRANSMISSION TIME AND CHANNEL MOVE TIME

Channel Move Time and the Channel Closing Transmission Time should be performed with Radar Type 0. The measurement timing begins at the end of the Radar Type 0 burst.
The Channel Closing Transmission Time is comprised of 200 milliseconds starting at the beginning of the Channel Move Time plus any additional intermittent control signals required to facilitate a Channel move (an aggregate of 60 milliseconds) during the remainder of the 10 second period. The aggregate duration of control signals will not count quiet periods in between transmissions.

b.DFS – CHANNEL NON-OCCUPANCY AND VERIFICATION OF PASSIVE SCANNING

Non-occupancy Period. A channel that has been flagged as containing a radar system, either by a channel availability check or in-service monitoring, is subject to a non-occupancy period of at least 30 minutes. The non-occupancy period starts at the time when the radar system is detected.

c.CHANNEL AVAILABILITY CHECK TIME

Channel Availability Check Time. A U-NII device shall check if there is a radar system already operating on the channel before it can initiate a transmission on a channel and when it has to move to a new channel. The U-NII device may start using the channel if no radar signal with a power level greater than the interference threshold values listed in paragraph (h)(2) of this section, is detected within 60 seconds.

d.CONTROL (TPC)

Compliance with the transmit power control requirements for devices is demonstrated through measurements showing multiple power levels and manufacturer statements explaining how the power control is implemented.

e.DETECTION PROBABILITY / SUCCESS RATE
During the U-NII Detection Bandwidth detection test, radar type 0 should be used. For each frequency step the minimum percentage of detection is 90 percent. Measurements are performed with no data traffic. Minimum 100% of the U-NII 99% transmission power bandwidth.

f.NON- OCCUPANCY PERIOD

During the 30 minutes observation time, UUT did not make any transmissions on a channel after a radar signal was detected on that channel by either the Channel Availability Check or the In-Service Monitoring

4.2.2 DFS CONDUCTIONTEST METHOD

a.The signal level of the simulated waveform is set to a reference level equal to the threshold level (plus 1dB if testing against FCC requirements).
Lower levels may also be applied on request of the manufacturer.
The signal level is verified by measuring the CW signal level at the coupling point to the RDD antenna port. The radar signal level is calculated from the measured level, R (dBm) and the lowest gain antenna assembly intended for use with the RDD
If both master and client devices have radar detection capability then the radar level at the non RDD is verified to be at least 20dB below the threshold level to ensure that any responses are due to the RDD detecting radar.
The antenna connected to the channel monitoring subsystem is positioned to allow both master and client transmissions to be observed, with the level of the EUT's transmissions between 6 and 10dB higher than those from the other device.

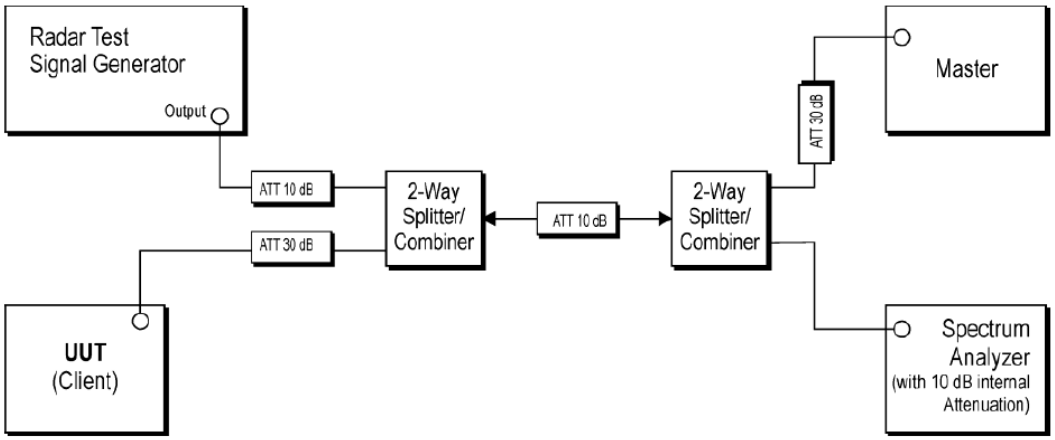

b. *Set-up B* is a set-up whereby the UUT is an RLAN device operating in slave mode, with or without Radar Interference Detection function.
This set-up also contains an RLAN device operating in master mode.
The radar test signals are injected into the master device.
The UUT (slave device) is associated with the master device.
Figure 5 shows an example for *Set-up B*. The set-up used shall be documented in the test report.

4.2.3 Calibration of Radar Waveform

4.2.3.1 Radar Waveform Calibration Procedure

The Interference Radar Detection Threshold Level is (-62dBm) + (1.80) [dBi]+ 1 dB= -59.20dBm and (-62dBm) + (2.62) [dBi]+ 1 dB= -58.38dBm that had been taken into account the output power range and antenna gain. The following equipment setup was used to calibrate the radiated Radar Waveform. A vector signal generator was utilized to establish the test signal level for radar type 0. During this process there were no transmissions by either the Master or Client Device. The spectrum analyzer was switched to the zero span (Time Domain) at the frequency of the Radar Waveform generator. Peak detection was used. The spectrum analyzer resolution bandwidth (RBW) and video bandwidth (VBW) were set to 3 MHz to measure the type 0 radar waveform. The spectrum analyzer had offset -8.26dB to compensate receiving horn antenna gain 11.80dBi and RF cable loss 3.54dB. The vector signal generator amplitude was set so that the power level measured at the spectrum analyzer was (-62dBm) + (0) [dBi]+ 1 dB= -61 dBm. Capture the spectrum analyzer plots on short pulse radar waveform.

4.2.3.2 Conducted Calibration Setup

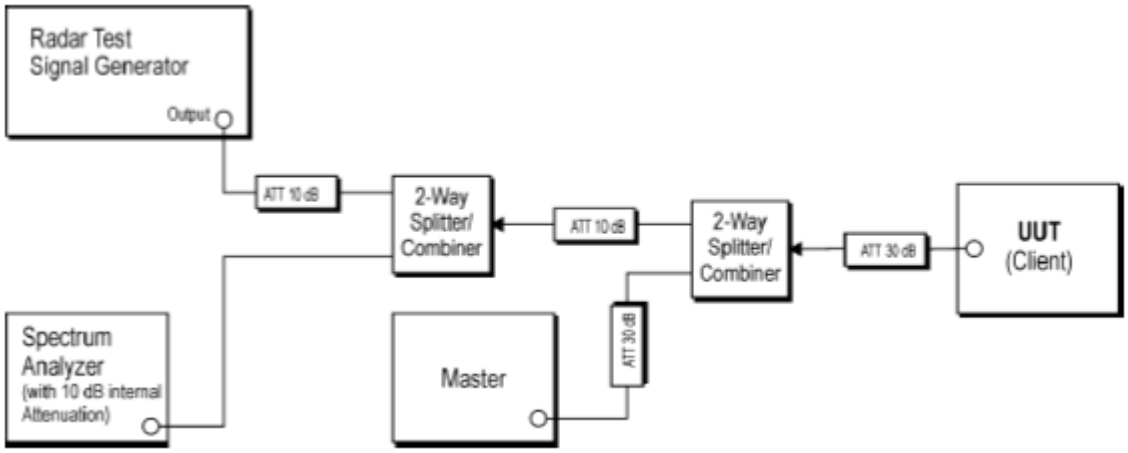

4.2.3.3 Calibration Deviation

There is no deviation with the original standard.

4.2.3.4 Radar Waveform Calibration Result

<80MHz / 5290 MHz> In-Service Monitoring

Radar / DFS detection threshold level and the burst of pulses on the Channel frequency

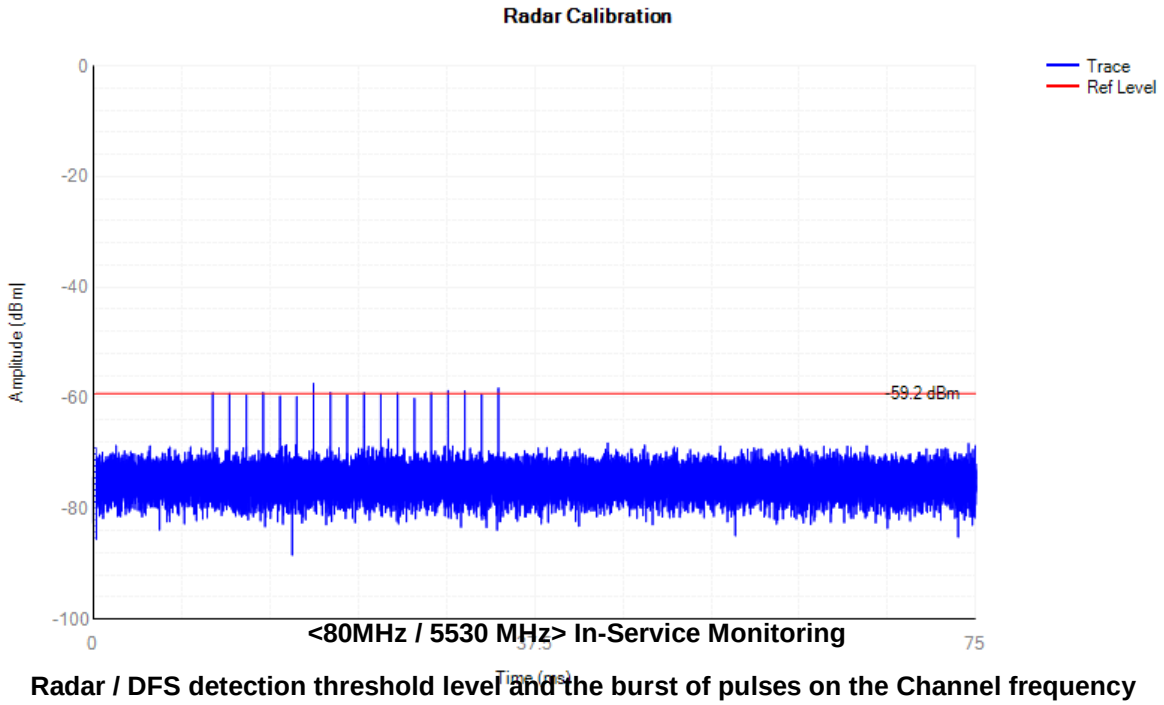

<80MHz / 5530 MHz> In-Service Monitoring

Radar / DFS detection threshold level and the burst of pulses on the Channel frequency

Note: 1. The test was conducted using radar type 0.
2. All test modes have been tested. The worst case test data is reported.

4.2.4 In-Service Monitoring: Channel Move Time, Channel Closing Transmission Time and Non-Occupancy Period

4.2.4.1 Limit of In-Service Monitoring

The EUT has In-Service Monitoring function to continuously monitor the radar signals, If radar is detected, it must leave the channel (Shutdown). The Channel Move Time to cease all transmissions on the current Channel upon detection of a Radar Waveform above the DFS Detection Threshold within 10 sec. The total duration of Channel Closing Transmission Time is comprised of 200 milliseconds starting at the beginning of the Channel Move Time plus any additional intermittent control signals required to facilitate Channel changes (an aggregate of 60 milliseconds) during the remainder of the 10 second period. The aggregate duration of control signals will not count quiet periods in between transmissions.

Non-Occupancy Period time is 30 minute during which a Channel will not be utilized after a Radar Waveform is detected on that Channel. The non-associated Client Beacon Test is during the 30 minutes observation time. The EUT should not make any transmissions in the DFS band after EUT power up.

4.2.4.2 Test Procedures

a. The radar pulse generator is setup to provide a pulse at frequency that the Master and Client are operating. A type 0 radar pulse with a 1us pulse width and a 1428 us PRI is used for the testing.

b. The vector signal generator is adjusted to provide the radar burst (18 pulses) at a level of approximately -62dBm at the antenna of the Master device.

c. A trigger is provided from the pulse generator to the DFS monitoring system in order to capture the traffic and the occurrence of the radar pulse.

d. A U-NII device operating as a Client Device will associate with the Master at Channel. The MPEG file “TestFile.mpg” specified by the FCC is streamed from the “file computer” through the Master to the Client Device and played in full motion video using Media Player Classic Ver. 6.4.8.6 in order to properly load the network for the entire period of the test.

e. When a radar Burst with a level equal to the DFS Detection Threshold + 1dB is generated on the Operating Channel of the U-NII device. At time T0 the Radar Waveform generator sends a Burst of pulse of the radar waveform at Detection Threshold + 1dB.

f. Observe the transmissions of the EUT at the end of the radar Burst on the Operating Channel. Measure and record the transmissions from the EUT during the observation time (Channel Move Time). One 12 seconds plot is reported for the Short Pulse Radar Types 1. The plot for the Short Pulse Radar Types start at the end of the radar burst. The Channel Move Time will be calculated based on the zoom in 600ms plot of the Short Pulse Radar Type.

g. Measurement of the aggregate duration of the Channel Closing Transmission Time method.With the spectrum analyzer set to zero span tuned to the center frequency of the EUT operating channel at the radar simulated frequency, peak detection, and max hold, the dwell time per bin is given by: **Dwell (0.4ms)= S (12000ms) / B (30000)**, where Dwell is the dwell time per spectrum analyzer sampling bin, S is the sweep time and B is the number of spectrum analyzer sampling bins. An upper bound of the aggregate duration of

the intermittent control signals of Channel Closing Transmission Time is calculated by: **C (ms)= N X Dwell (0.4 ms)**, where C is the Closing Time, N is the number of spectrum analyzer sampling bins (intermittent control signals) showing a U-NII transmission and Dwell is the dwell time per bin.

4.2.4.3 Test Setup

Conducted Test Setup Photo

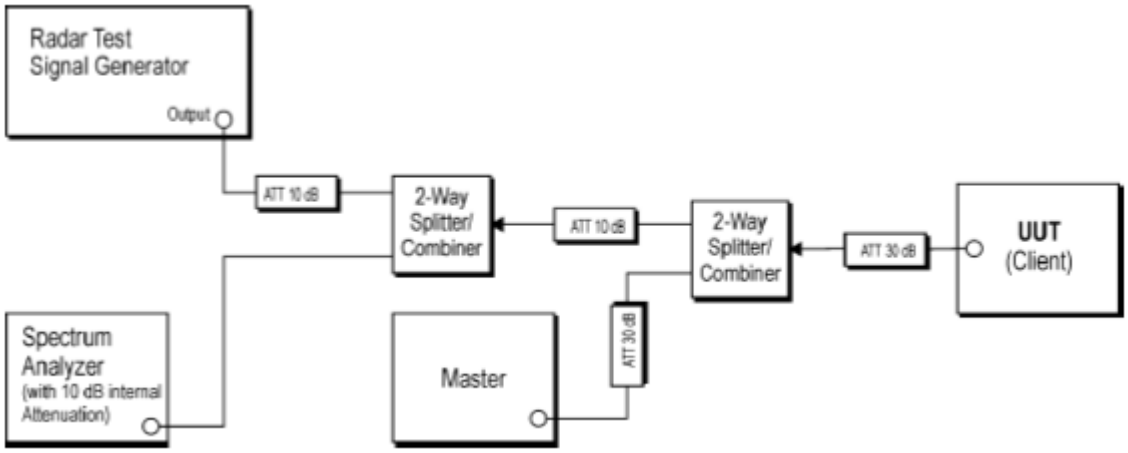

4.2.4.4 Test Deviation

There is no deviation with the original standard.

4.2.4.5 Channel Move Time, Channel Closing Transmission Time and Non-Occupancy Period for Client Beacon Test

BW / Channel	Test Item	Test Result	Limit	Pass/Fail
80MHz / 5290 MHz	Channel Move Time	0.0997s	< 10s	Pass
	Channel Closing Transmission Time	200ms + 3.6ms	< 260ms	Pass
	Non-Occupancy Period and Client Beacon Test	No transmission or Beacons	30 minutes	Pass

BW / Channel	Test Item	Test Result	Limit	Pass/Fail
80MHz / 5530 MHz	Channel Move Time	0.1109s	< 10s	Pass
	Channel Closing Transmission Time	200ms + 3.6ms	< 260ms	Pass
	Non-Occupancy Period and Client Beacon Test	No transmission or Beacons	30 minutes	Pass

Note: The Channel Closing Transmission Time is comprised of 200 milliseconds starting at the beginning of the Channel Move Time plus any additional intermittent control signals required to facilitate a Channel move (an aggregate of 60 milliseconds) during the remainder of the 10 seconds period. The aggregate duration of control signals will not count quiet periods in between transmissions.

4.2.4.6 Channel Move Time, Channel Closing Transmission Time and Non-Occupancy Period for Client Beacon Test Plots

<80MHz / 5290 MHz> In-Service Monitoring

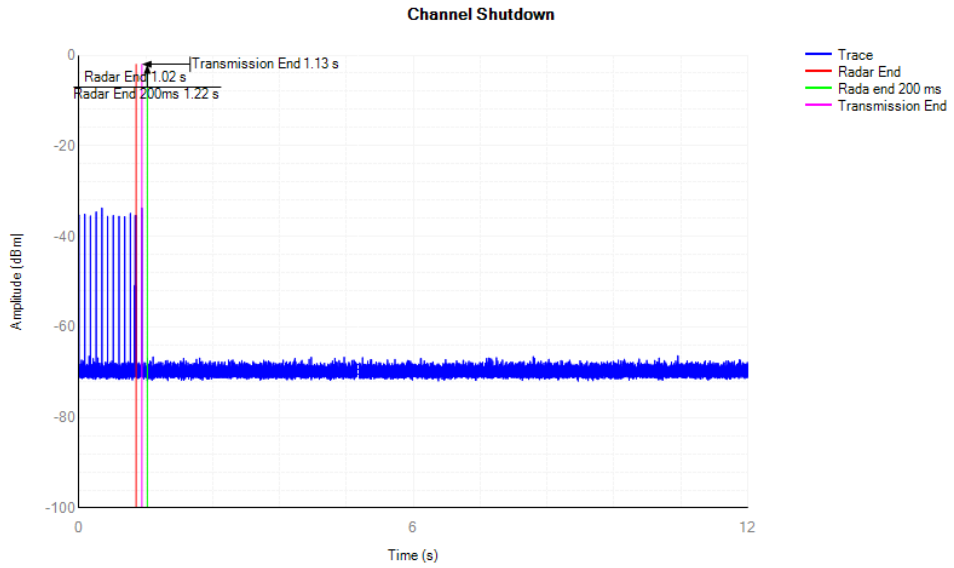

<80MHz / 5530 MHz> In-Service Monitoring

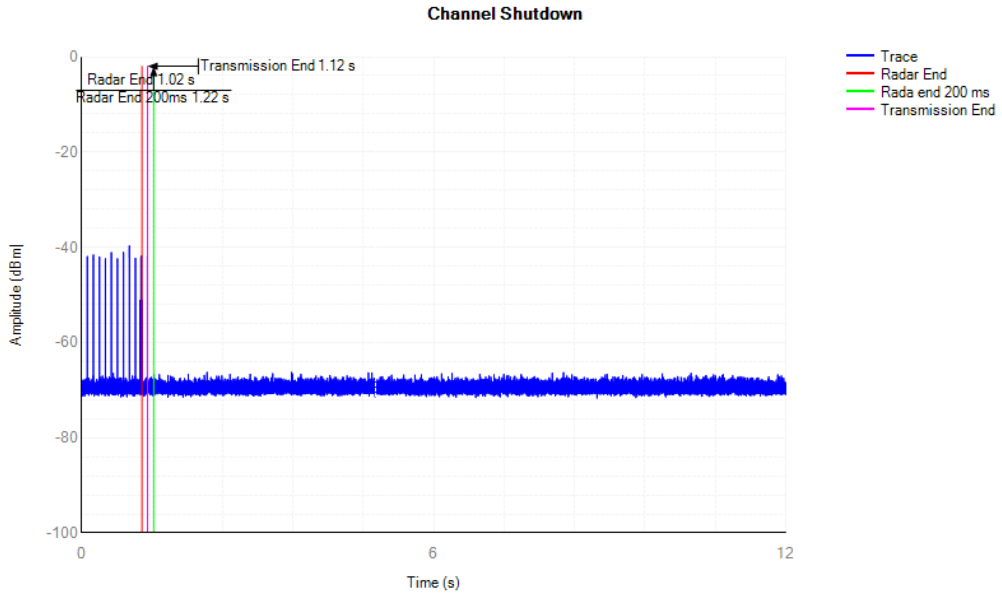

<80MHz / 5290 MHz> Non-Occupancy Period

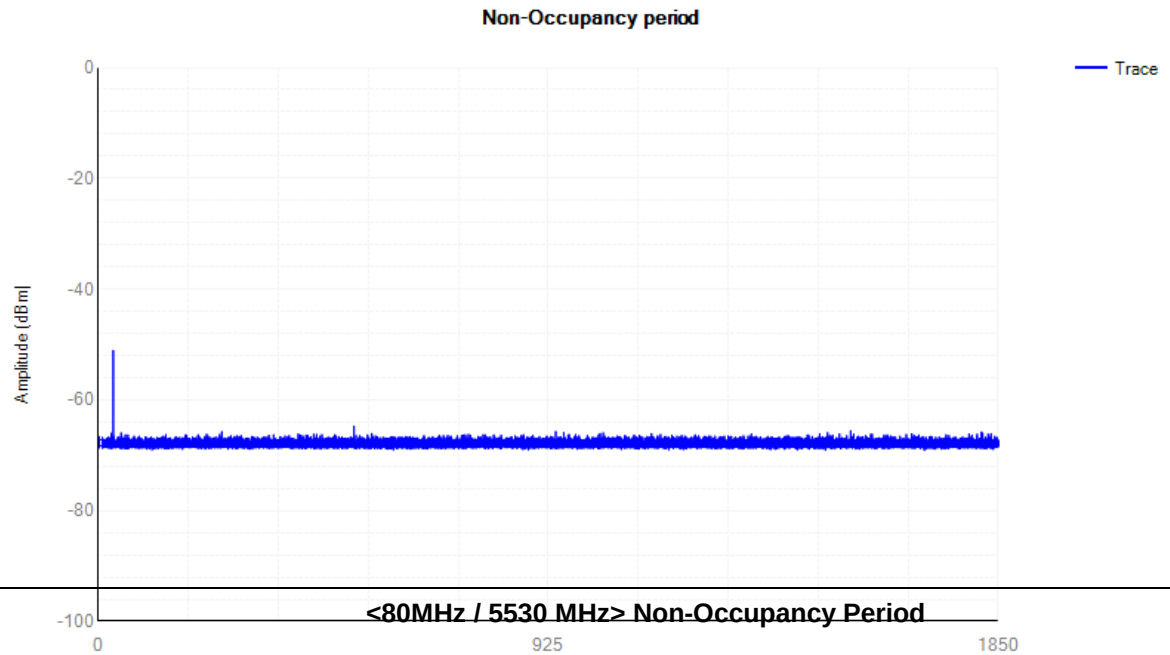

<80MHz / 5530 MHz> Non-Occupancy Period

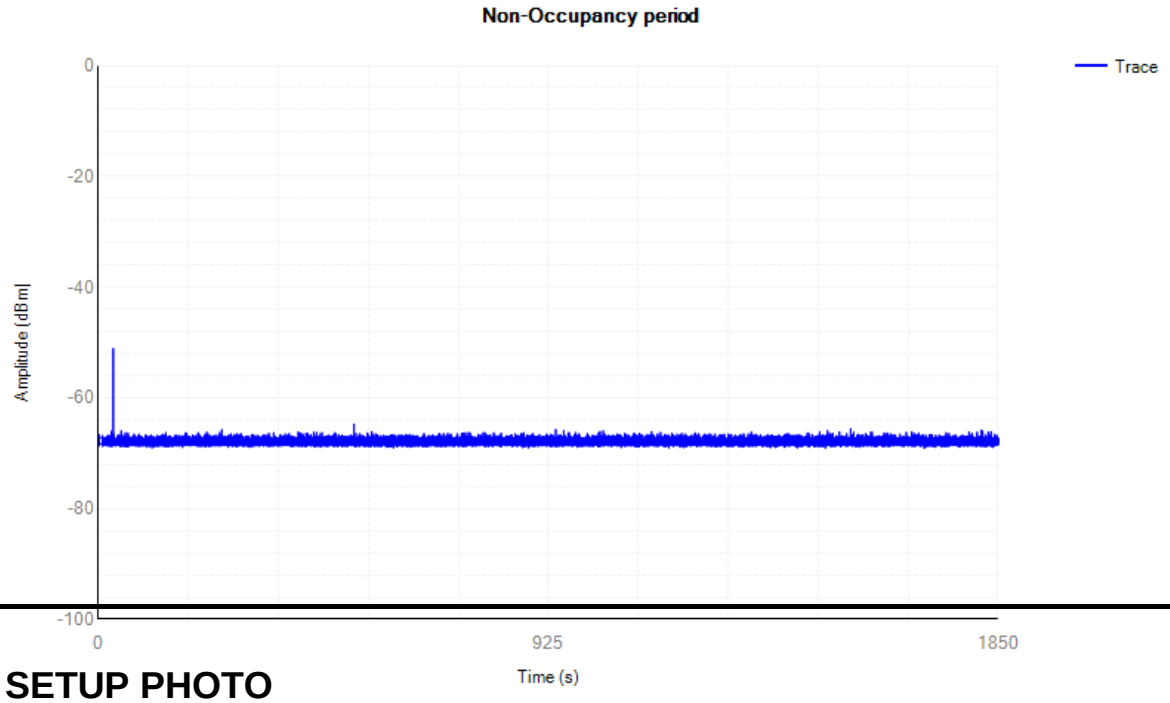

5. SETUP PHOTO

Please refer to the Appendix of Test photos.

--------END OF REPORT-------