Commercial Electric™

SKU #1012362054
Model #TAPE192/CCT/HD

USE AND CARE GUIDE

16FT LED WHITE COLOR SELECTABLE TAPE LIGHT WITH REMOTE

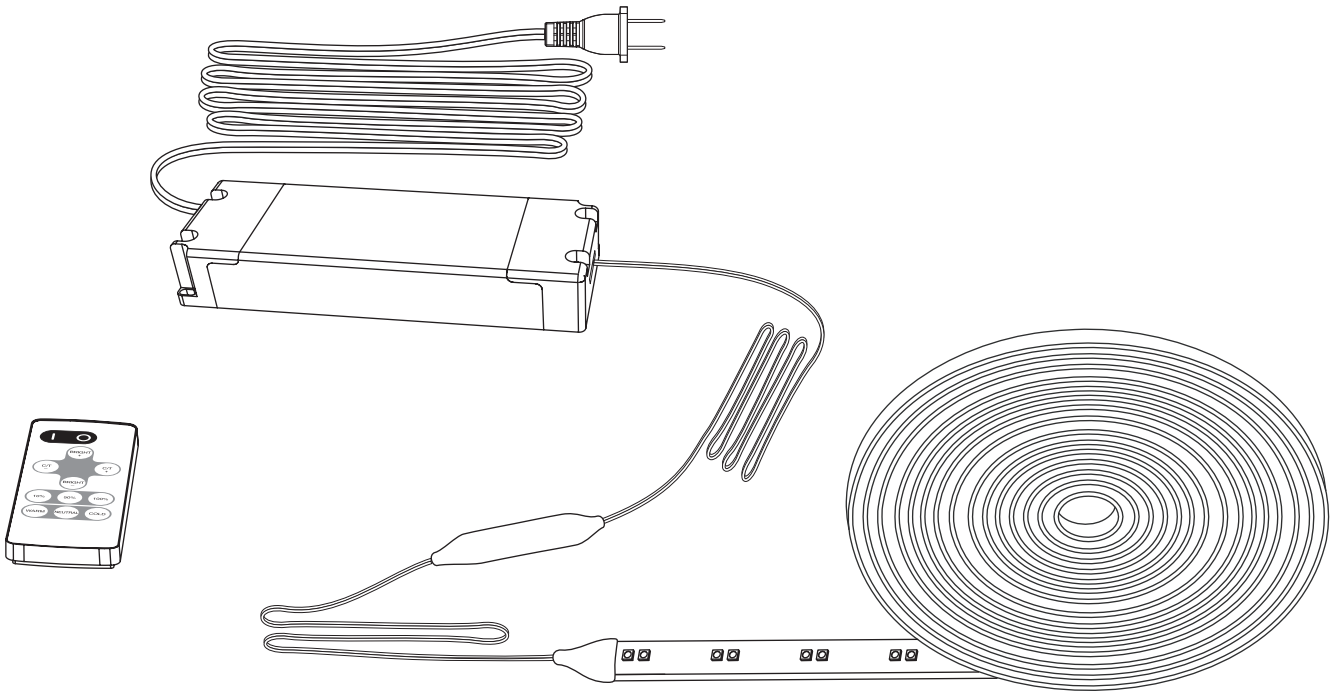

Questions, problems, missing parts? Before returning to the store,
call Commercial Electric Customer Service
8 a.m. - 7 p.m., EST, Monday - Friday,
9 a.m. - 6 p.m., EST, Saturday

1-877-527-0313
HOMEDEPOT.COM

THANK YOU

We appreciate the trust and confidence you have placed in Commercial Electric through the purchase of this product. We strive to continually create quality products designed to enhance your home. Visit us online to see our full inventory of products available for your home improvement needs. Thank you for choosing Commercial Electric!

Table of Contents

Safety Information 2
FCC Statement 2
Warranty 2
Pre-Installation 3
Tool Required 3
Hardware Included 3
Installation 4-6
Operation 7
Care & Cleaning 8
Troubleshooting 8

Safety Information

For your safety, always remember to:

- □ Only use the 24-volt LED lighting power supply adapter which has been provided with this 16 ft. kit, do not connect or add another strip to this single adapter.
- □ Do not bend, crush or pull the cable. Protect from sharp edges, oil and heat.
- □ For indoor/dry location use only.
- □ Electrical waste should not be disposed of with household waste. Please recycle where facilities exist.

This portable luminaire has a polarized plug (one blade is wider than the other) as a feature to reduce the risk of electric shock. This plug will fit in a polarized outlet only one way. If the plug does not fit fully in the outlet, reverse the plug. If it still does not fit, contact a qualified electrician. Never use with an extension cord unless plug can be fully inserted.
Do not alter the plug.

DANGER: Danger of eye damage. Do not stare directly at the LED chips of this LED strip.

CAUTION: Do not power LED tape while coiled on reel.

IMPORTANT: Always observe polarity for 24 V connections, positive (+) to positive and negative (–) to negative.

IMPORTANT: Do not install Class 2 low voltage wiring in the same runs as AC main power. If AC and low voltage wires cross, keep them at 90-degree angles. Use only insulated staples, plastic ties, or wire support clips to secure cords and wires.

Supplier's Declaration of Conformity:
47 CFR § 2.1077 Compliance Information
Responsible Party:
Feit Electric Company
4901 Gregg Road,
Pico Rivera, CA 90660, USA
www.feit.com
Unique Identifier:
TAPE192/CCT/HD

FCC STATEMENT: This device complies with part 15 of the FCC Rules. Operation is subject to the following two conditions: (1) This device may not cause harmful interference, and (2) this device must accept any interference received, including interference that may cause undesired operation. Note: This equipment has been tested and found to comply with the limits for a Class B digital device, pursuant to part 15 of the FCC Rules. These limits are designed to provide reasonable protection against harmful interference in a residential installation. This equipment generates, uses and can radiate radio frequency energy and, if not installed and used in accordance with the instructions, may cause harmful interference to radio communications. However, there is no guarantee that interference will not occur in a particular installation. If this equipment does cause harmful interference to radio or television reception, which can be determined by turning the equipment off and on, the user is encouraged to try to correct the interference by one or more of the following measures: Reorient or relocate the receiving antenna. Increase the separation between the equipment and receiver. Connect the equipment into an outlet on a circuit different from that to which the receiver is connected. Consult the dealer or an experienced radio/TV technician for help. Any changes or modifications not expressly approved by the manufacturer could void the user's authority to operate the equipment.

Radiation Exposure Statement

This device complies with FCC radiation exposure limits set forth for an uncontrolled environment.

Limited Warranty

This product is warranted to be free from defects in workmanship and materials for up to 3 years from date of purchase. If it fails to do so, please contact the Customer Service Team at 1-877-527-0313 or visit www.HomeDepot.com.

Pre-Installation

TOOLS REQUIRED (NOT INCLUDED)

Measuring Tape

Scissors

HARDWARE INCLUDED

NOTE: Hardware not shown to actual size.

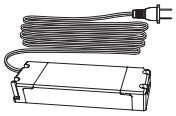

AA

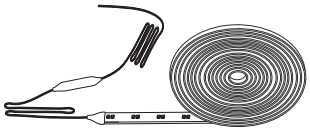

BB

CC

DD

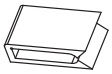

EE

FF

Part	Description	Quantity
AA	Plug-in power adapter	1
BB	16 feet LED flexible strip	1
CC	RF remote control	1
DD	Wire lead connector (optional use)	2
EE	Wire support clips	2
FF	AAA batteries	2

Installation

1 Cutting the tape light (optional)

IMPORTANT: Make sure to observe polarity when making connections, positive to positive and negative to negative. Check to see that the wire colors and the polarity markings printed on the tape line up.

- This tape light can be cut every three LEDs at 12.7 cm intervals (approx. 5 in.).
- To use the included LED snap connectors (DD), cut the LED tape with scissors in the center of a copper pad (position A) as shown.
- The tape can also be cut at silver solder joints (position B), but this cut point should be used for soldered connections only.

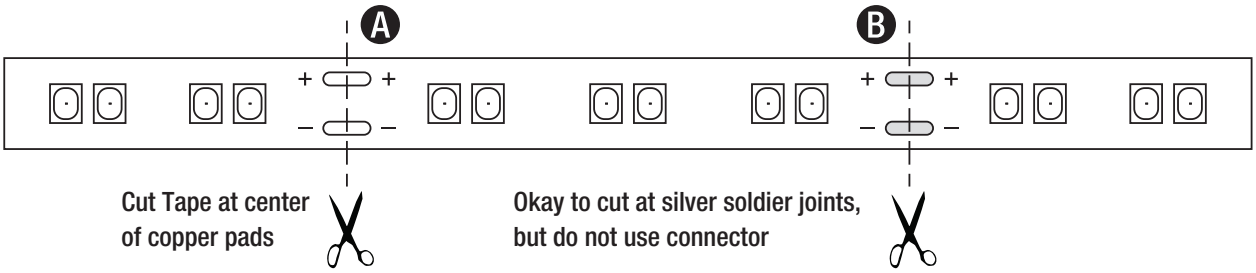

- Use the wire lead connectors (DD) to make turns and go around corners. Additionally, they can also be extended for gaps of any size with 2-pin Commercial Electric Accessory Kits (not Included).

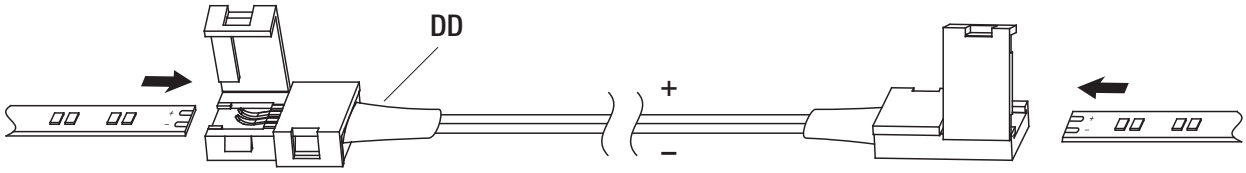

NOTE: Be sure all 24 V connections are secure and protected from electrical shorting. Options include electrical tape, small wire nuts, crimp connectors, etc.

2 How to use included connectors

- The wire lead connectors (DD) are used to join two sections of LED tape.
- Open the lid of the connector opposite the wire.
- Peel about ¼ inch of the paper from the LED strip adhesive backing at the connection point.
- Use a gentle side-to-side motion to slide the strip into the connector, making sure the tape slides under the internal connector contact points.
- Close the connector door firmly.
- Perform a power test to be sure the connection is secure. If the LEDs flicker or do not light, repeat the steps in this guide.

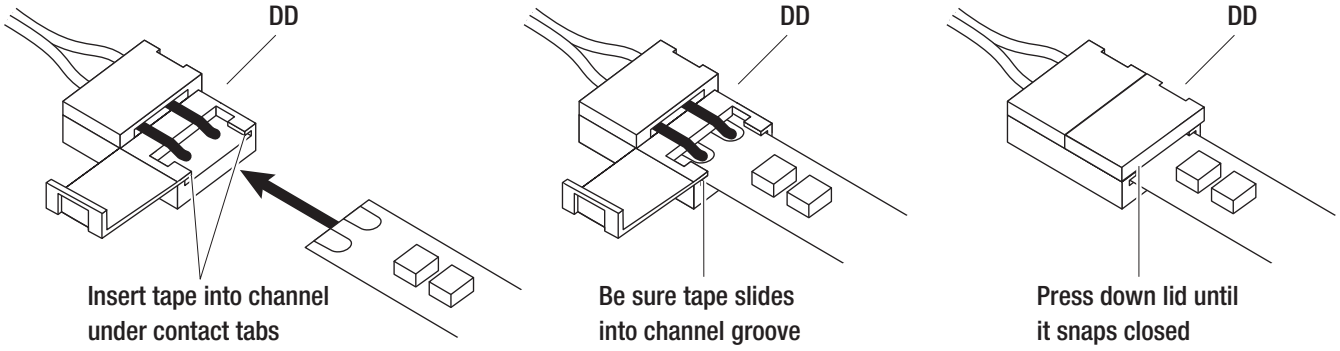

3 Soldering the Led tape (optional)

- Soldering is another method for joining wires to the tape light and joining sections of tape light directly together.

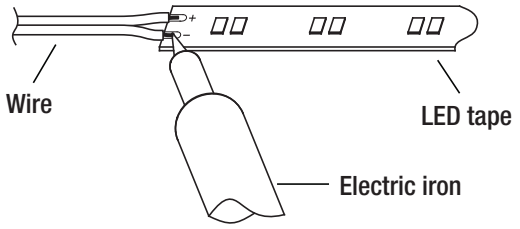

Wire Lead Connection

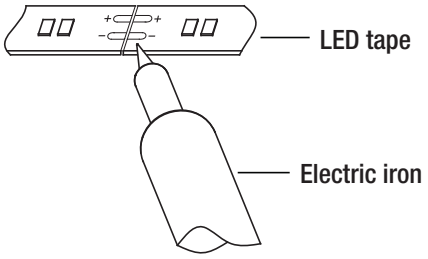

Splice Connection

WARNING: Soldering tape lights to wire should only be performed by individuals with proper knowledge and experience in soldering. Improper soldering can lead to electrical hazards, damage to components, and potential injury. If you are not confident in your soldering skills, seek assistance from a qualified professional.

4 Preparing the assembly location

- Power the LED tape lighting and temporarily hold or tape into position with painter's tape or masking tape – do not remove the adhesive paper backing.
- Adjust the lighting to various angles and positions to get the desired level of illumination and lighting appearance. If the LEDs create undesirable light spots on walls, or reflections, reposition the tape light strip farther away from the surfaces or try a different mounting angle.
- Once you have determined your final mounting position, remove any dirt and dust present where the tape will be applied. Mounting surfaces should be clean, completely dry, and as dust-free as possible. For best results, install when temperatures are above 60ºF (15ºC). When installing on painted surfaces, paint should be fully cured based on manufacturer's cure time.

5 Installing the LED strip

- Working from one end to the other, remove the paper backing protecting the adhesive and firmly press the LED tape (BB) down with your fingers or a clean cloth, taking care not to press on the individual LEDs.
- Support and secure the power cables leading to the tape light with the included wire support clips.

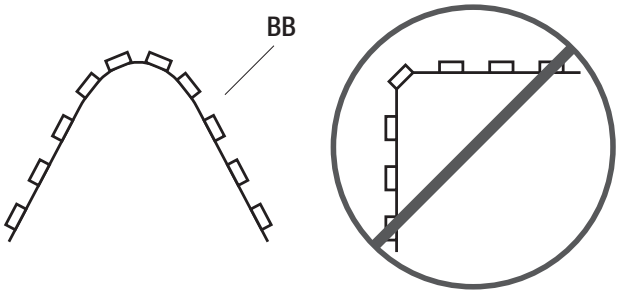

NOTE: Although the LED tape can be installed in curved and irregular spaces, avoid sharp bends or bending on the solder joints as you could damage the LED tape light. If an LED is inadvertently damaged and fails to light, the remaining LEDs will continue to operate.

IMPORTANT: This strip light uses permanent tape and may cause surface damage if removed. Included attached adhesive tape not recommended for mounting on brick or concrete. For textured surfaces, other mounting tapes may be available. Please contact The Home Depot customer support.

6 Installing the power supply

- ☐ Connect the AC power cord to a live outlet.
- ☐ If connected to a switched outlet, be sure the power is switched ON for proper remote operation.

IMPORTANT: Do not power the LED tape while on the reel, as the LEDs will overheat.

7 Direct wiring the power supply (optional)

- ☐ To direct wire, remove the AC input cable/plug and connect black live wire from a branch circuit to the line side (L) of the built-in terminal block and connect the white neutral wire to the neutral side of the terminal block (N), as indicated on the case power supply uses Class II AC inputs with a fully isolated case; ground wire should not be connected.
- ☐ Before restoring power, make sure all connections are tight and the endcaps are reinstalled securely.
- ☐ The 24-volt power cable to the tape lighting can be shortened or lengthened as needed. 18AWG is recommended when lengthening this cable; keep wire runs as short as possible. Always use suitable wire connectors to meet installation requirements.

WARNING: Disconnect power by unplugging the power cord or turning off the circuit breaker before removing the power supply end caps.

WARNING: Do not use standard 120-volt AC dimmers with this power supply. Use included RF remote for dimming capabilities.

IMPORTANT: All wiring must be in accordance with national and local electrical codes, low-voltage Class 2 circuit. If you are unclear as to how to install and wire this product, consult a licensed electrician.

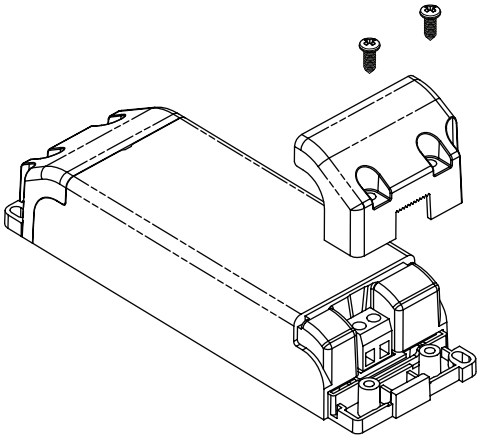

8 Wiring Low Voltage Cable (optional)

- ☐ When the power supply (BB) end caps are removed, the input and output cables can be removed by loosening the screws on the power supply cable connector terminal block.
- ☐ Removing the low-voltage output cable from the power supply will allow cable runs through cabinets and around any obstacles as needed for a more custom installation. When reinstalling the cables to the power supply, be sure to follow the polarity printed on the case (red wire to +, black to -).

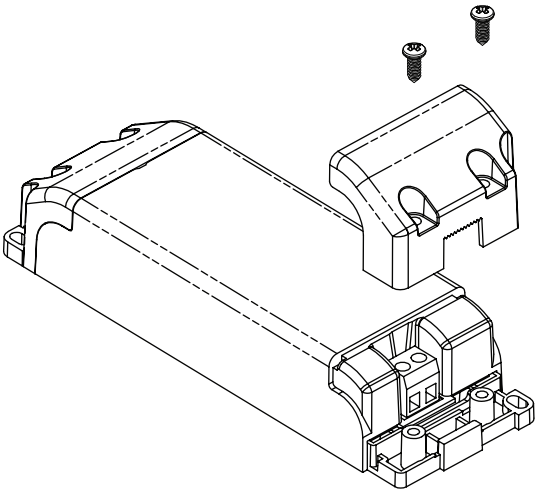

Operation

1 Installing the Batteries

- ☐ Remove the AAA batteries from the plastic wrap.
- ☐ Press the clip to release the battery cover.
- ☐ Place the AAA batteries into the compartment, aligning the positive end (+) with the corresponding symbol inside the compartment.
- ☐ Once the batteries are correctly installed, replace the battery compartment cover and test the remote.

2 Functions of the remote

- ☐ The remote (CC) does not require line-of-sight to operate the lights. Range will vary depending on your building structure and where the receiver on the tape light is mounted.
- ☐ The remote can operate up to 50 feet in optimal conditions, but each installation has unique variables that may affect range.

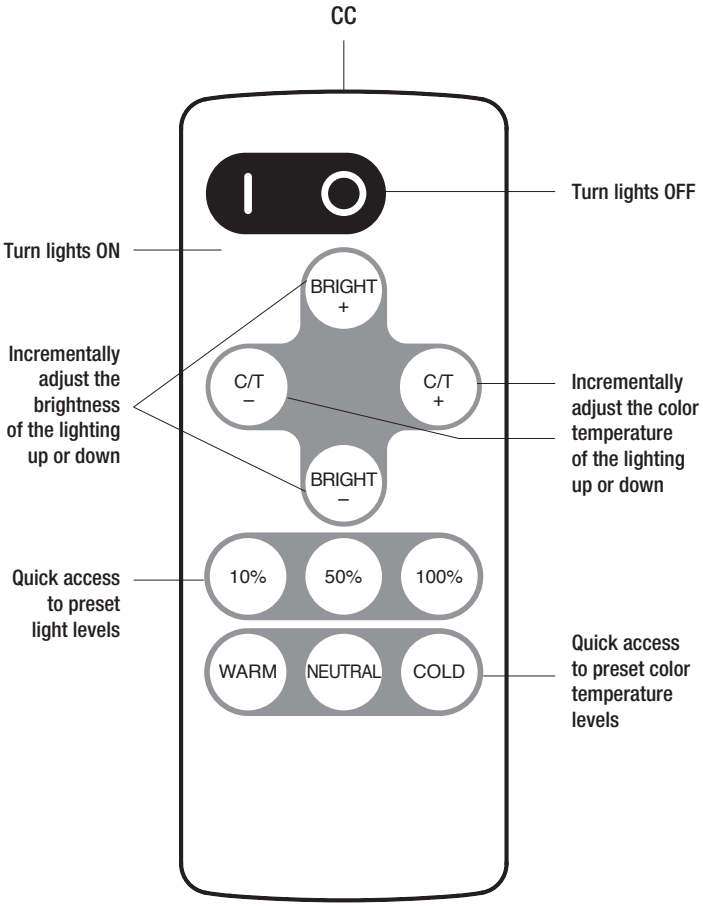

3 Pairing Multiple Kits

The remote (CC) in each kit comes paired with the tape light (BB). For larger installations, multiple kits can be paired together for control by a single remote (CC).

Pairing

- ☐ Unplug the power adapter (AA) for the kit that is to be paired. Wait 5 seconds.
- ☐ Restore power to the adapter (AA), then within 10 seconds press and hold the power ON buttons on the remote (CC).
- ☐ The lights will flash 3 times to indicate a successful pairing.

This kit will now operate with the remote used in this procedure. Repeat as desired with other kits and remotes.

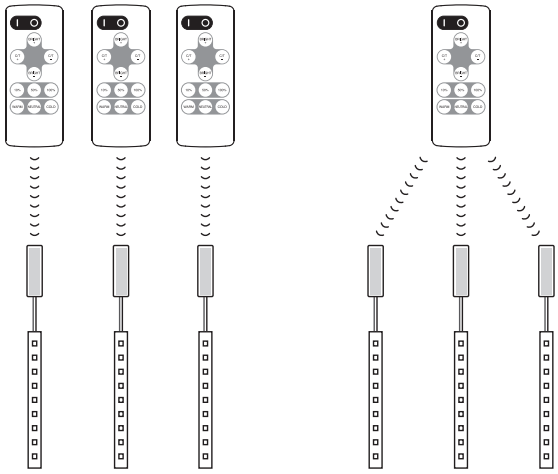

Each remote uniquely paired to a kit

One Remote paired to multiple kits

NOTE: Dynamic effects will not stay synchronized when one remote is paired to multiple kits.

UNPAIRING

- ☐ Unplug the power adapter (AA) for the kit that is to be paired. Wait 5 seconds.
- ☐ Restore power to the adapter (AA), then within 10 seconds press and hold the power On button on the remote (CC).
- ☐ The lights will flash seven (7) times to indicate a successful unpairing.

Care and Cleaning

- To clean the light, use a clean dry or slightly damp cloth.
- Do not use cleaners with chemicals, solvents or harsh abrasives as damage to the light strip may occur.

Troubleshooting

Problem	Possible Cause	Solution
The LED strip will not light.	The power supply does not have power.	Make sure the plug is fully inserted into a live 120 V outlet. Check connections and circuit breaker if direct wiring.
	The power supply output cable is not properly secured.	If direct wiring, make sure that the DC output cable is wired securely to the output of the power supply.
	The polarity is incorrect.	When direct wiring, check that the orientation of the input and output match the markings on the case.
	Batteries in the remote are dead, improperly installed, or the battery protector has not been removed.	Make sure the battery protective strip is removed. Check that the orientation and type of battery are correct and that the battery is not depleted.
	The remote is too far from the receiver.	The remote can operate up to 50 feet in optimal conditions, but each installation has unique variables that may affect range.
Only part of the LED strip lights.	A connection point is faulty.	Check for secure connections at the point that is not lit. Confirm that polarity is the same between the lit and unlit segments.
The fuse blows or a circuit breaker trips when the light is turned on.	A wire is exposed.	□ Discontinue use of the lamp. □ Unplug the unit from the wall. □ Contact a qualified electrician or call the Customer Care Service Team at 1-877-527-0313, 8 a.m. - 7 p.m., EST, Monday - Friday, 9 a.m. - 6 p.m., EST, Saturday.

Commercial Electric™

Questions, problems, missing parts? Before returning to the store,
call Commercial Electric Customer Service
8 a.m. - 7 p.m., EST, Monday - Friday, 9 a.m. - 6 p.m., EST, Saturday

1-877-527-0313

HOMEDEPOT.COM

Retain this manual for future use.