PTM 215ZE 2.4 GHz IEEE 802.15.4 Pushbutton Transmitter Module

17 March 2022

Observe precautions! Electrostatic sensitive devices!

Patent protected:
WO98/36395, DE 100 25 561, DE 101 50 128,
WO 2004/051591, DE 103 01 678 A1, DE 10309334,
WO 04/109236, WO 05/096482, WO 02/095707,
US 6,747,573, US 7,019,241

PTM 215ZE – 2.4 GHz IEEE 802.15.4 Pushbutton Transmitter Module

REVISION HISTORY

The following major modifications and improvements have been made to this document:

Version	Author	Reviewer	Date	Major Changes
1.0	MKA	MHö / MF	09.03.2022	Initial Release

Published by EnOcean GmbH, Kolpingring 18a, 82041 Oberhaching, Germany
www.enocean.com, info@enocean.com, phone +49 (89) 6734 6890

© EnOcean GmbH, All Rights Reserved

Important!
This information describes the type of component and shall not be considered as assured characteristics. No responsibility is assumed for possible omissions or inaccuracies. Circuitry and specifications are subject to change without notice. For the latest product specifications, refer to the EnOcean website: http://www.enocean.com.
As far as patents or other rights of third parties are concerned, liability is only assumed for modules, not for the described applications, processes and circuits.
EnOcean does not assume responsibility for use of modules described and limits its liability to the replacement of modules determined to be defective due to workmanship. Devices or systems containing RF components must meet the essential requirements of the local legal authorities.
The modules must not be used in any relation with equipment that supports, directly or indirectly, human health or life or with applications that can result in danger for people, animals or real value.
Components of the modules are considered and should be disposed of as hazardous waste. Local government regulations are to be observed.
Packing: Please use the recycling operators known to you.

TABLE OF CONTENT

1 General Description 5
1.1 Key Functionality 5
1.2 Technical Data 6
1.3 Physical Dimensions 6
1.4 Environmental Conditions 6
1.5 Packaging Information 6
1.6 Ordering Information 6
2 Functional Information 7
2.1 Device Overview 7
2.2 Functional Principle 7
2.3 Block Diagram 8
2.4 User Interface 9
3 Radio Transmission 10
3.1 Radio Channel Parameters 10
3.2 Telegram Structure 11
3.2.1 PHY Header 12
3.2.2 MAC Header 13
3.2.3 MAC Trailer 13
3.3 Payload Structure 14
3.3.1 Button Contact Encoding 15
4 Telegram Authentication 16
4.1 Authentication Implementation 17
5 Commissioning 18
5.1 Commissioning Mode Entry 18
5.2 Commissioning Telegram Transmission 19
5.3 Commissioning Telegram Format 20
5.3.1 Commissioning Telegram Example 21
5.4 Radio Channel Adjustment 22
5.4.1 Adjustment examples 22
5.5 Determining The Correct Radio Channel 23
5.6 Radio Channel Storage And Return To Data Mode 23
6 Device Integration 24
6.1 Using the NFC interface 24
6.2 NFC interface functions 25
6.3 NFC interface state machine 25
6.3.1 IDLE state 26
6.3.2 READY 1 state 26
6.3.3 READY 2 state 26
6.3.4 ACTIVE state 26
6.3.5 Read command 27

6.3.6 Write command 27
6.3.7 Password authentication (PWD_AUTH) command 28
7 Device Integration 29
7.1 Mechanical Interface Characteristics 29
7.2 Mechanical Interface Drawings 29
7.3 Device Label 35
7.3.1.1 QR Code Format 35
8 Application Information 36
8.1 Transmission Range 36
9 Regulatory Information 37
9.1 RED for the European Market 37
9.2 FCC (United States) Certificate 38
9.2.1 FCC (United States) Regulatory Statement 39
9.3 ISED (former Industry Canada) Certificate 40
9.3.1 ISED (former Industry Canada) Regulatory Statement 41
9.3.1.1 English version 41
9.3.1.2 French version 42
10 Product history 43
11 References 43

1 General Description

1.1 Key Functionality

PTM 215ZE enables the realization of energy harvesting wireless switches for systems communicating based on the 2.4 GHz IEEE 802.15.4 radio standard including those supporting the ZigBee Green Power standard.

PTM 215ZE integrates an NFC interface which can be used to configure device parameters used for the radio telegram transmission.

PTM 215ZE is mechanically compatible with the established PTM 21x form factor enabling quick integration into a wide range of designs. Key applications are wall-mounted or portable switches either with up to two rockers or up to four push buttons.

PTM 215ZE pushbutton transmitters are self-powered (no batteries) and fully maintenance-free. They can therefore be used in all environments including locations that are difficult to reach or within hermetically sealed housings. The required energy is generated by an electrodynamic energy transducer actuated by an energy bow located on the left and right of the module. This energy bow which can be pushed from outside the module by an appropriate pushbutton or switch rocker.

When the energy bow is pushed down or released, electrical energy is created and a 2.4GHz radio telegram according to the ZigBee Green Power standard is transmitted. This radio telegram transmits the operating status of all four contact nipples at the moment when the energy bow was pushed down or released. PTM 215ZE telegrams are protected with an AES-128 signature based on a device-unique private key.

Figure 1 below shows PTM 215ZE.

Figure 1 – PTM 215ZE Product Outline

1.2 Technical Data

Antenna	Integrated antenna
Max. radio transmit power (measured)	+6 dBm / 4 mW
Radio Standard	ZigBee Green Power (IEEE 802.15.4)
Supported Radio Channels	2.4 GHz Channel 11 … 26 (Default: Channel 11)
Radio Channel Selection	User-selectable (Commissioning)
Device Identification	Individual 32 Bit Device ID (factory programmed)
Telegram Authentication	AES128 (CBC Mode) with Sequence Code
Power Supply	Integrated Kinetic Energy Harvester
Button Inputs	Up to four buttons or two rockers
Configuration Interface	NFC (ISO1443)

1.3 Physical Dimensions

Module Dimensions	40.0 x 40.0 x 11.2 mm
Module Weight	20 g

1.4 Environmental Conditions

Operating Temperature	-25°C ... 65°C
Storage Temperature	-25°C ... 65°C
Humidity	0% to 95% r.h. (non-condensing)

1.5 Packaging Information

Packaging Unit	100 units
Packaging Method	Tray / Box (10 units per tray, 10 trays per box)

1.6 Ordering Information

Type	Ordering Code	Frequency
PTM 215ZE	S3271-A215	2.4 GHz (IEEE 802.15.4)

2 Functional Information

2.1 Device Overview

The pushbutton transmitter module PTM 215ZE from EnOcean enables the implementation of wireless switches and remote controls without batteries. Power is provided by a built-in electro-dynamic power generator.

The outer appearance of PTM 215ZE is shown in Figure 2 below.

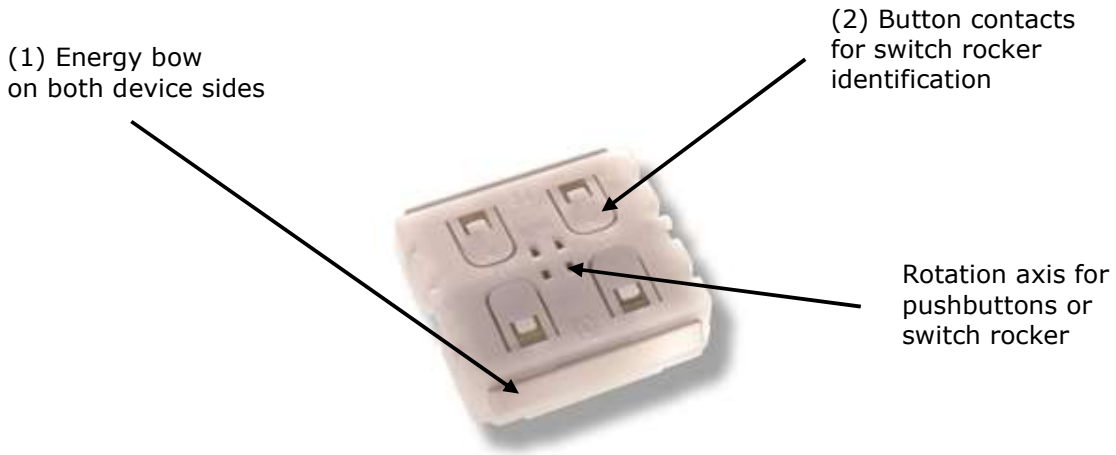

Figure 2 – Electro-dynamic powered pushbutton transmitter module PTM 215ZE

2.2 Functional Principle

PTM 215ZE devices contain an electro-dynamic energy transducer which is actuated by an energy bow (1). This bow is pushed by an appropriate push button, switch rocker or a similar construction mounted onto the device. An internal spring will release the energy bow as soon as it is not pushed down anymore.

When the energy bow is pushed down, electrical energy is created and a ZigBee Green Power radio telegram is transmitted which identifies the status (pressed or not pressed) of the four button contacts (2). Releasing the energy bow similarly generates energy which is used to transmit a different radio telegram.

It is therefore possible to distinguish between radio telegrams sent when the energy bar was pushed and radio telegrams sent when the energy bar was released.

By identifying these different telegrams types and measuring the time between pushing and releasing of the energy bar, it is possible to distinguish between “Long” and “Short” button contact presses. This enables simple implementation of applications such as dimming control or blinds control including slat action.

2.3 Block Diagram

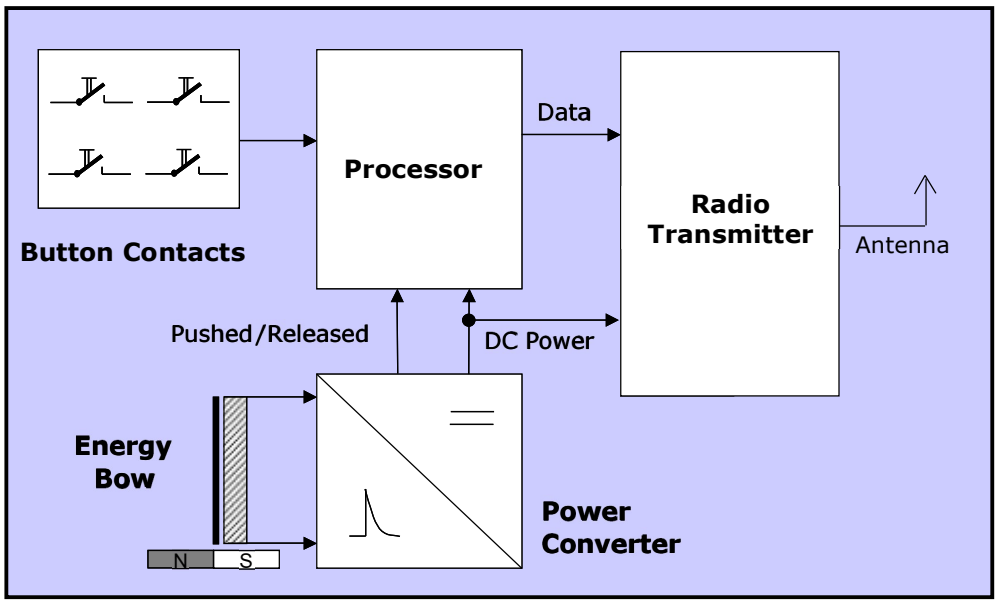

Figure 3 – Block diagram of PTM 215ZE

Energy Bow / Power Generator
Converts the motion of the energy bow into electrical energy

Power Converter
Converts the energy of the power generator into a stable DC supply voltage for the device electronics

Processor
Determines the status of the button contacts and the energy bow, encodes this status into a data word, generates the proper radio telegram structure and sends it to the radio transmitter

Radio transmitter
Transmits the data in the form of a series of short ZigBee Green Power radio telegrams using the integrated antenna

In addition, PTM 215ZE contains an integrated NFC interface according to ISO14443 that can be used to configure device parameters.

2.4 User Interface

PTM 215ZE devices provide four button contacts. They are grouped into two channels (Channel A and Channel B) each containing two button contacts (State O and State I).

The state of all four button contacts (pressed or not pressed) is transmitted together with a unique device identification (32 Bit ZigBee Green Power Device ID) whenever the energy bow is pushed or released.

Figure 4 below shows the arrangement of the four button contacts and their designation.

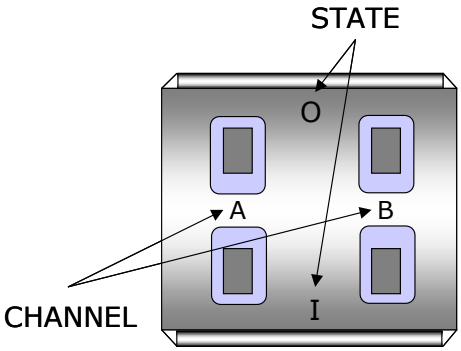

Figure 4 – Button contact designation

3 Radio Transmission

PTM 215ZE transmits data telegrams according to IEEE 802.15.4 physical radio interface using ZigBee Green Power data and commissioning telegrams.

3.1 Radio Channel Parameters

PTM 215ZE supports all sixteen IEEE 802.15.4 / ZigBee Green Power radio channels in the 2.4 GHz band (channels 11 … 26 according to IEEE 802.15.4 notation) which can be selected as described above.

Table 1 below shows the correspondence between channel number and channel frequency (in MHz).

Channel ID	Lower Frequency	Centre Frequency	Upper Frequency
11	2404	2405	2406
12	2409	2410	2411
13	2414	2415	2416
14	2419	2420	2421
15	2424	2425	2426
16	2429	2430	2431
17	2434	2435	2436
18	2439	2440	2441
19	2444	2445	2446
20	2449	2450	2451
21	2454	2455	2456
22	2459	2460	2461
23	2464	2465	2466
24	2469	2470	2471
25	2474	2475	2476
26	2479	2480	2481

Table 1 - IEEE 802.15.4 Radio Channels and Frequencies (in MHz)

3.2 Telegram Structure

PTM 215ZE transmits radio telegrams in the 2.4 GHz band according to the IEEE 802.15.4 frame structure using a ZigBee Green Power compliant payload.

Note that the byte order used by these standards is little endian. This means that for multi-byte structures (such as 2 byte, 4 byte or 8 byte fields) the least significant byte (LSB) is transmitted first.

The frame structure used by PTM 215ZE consists of the following four main parts:

- PHY Header
  The PHY header indicates to the receiver the start of a transmission and provides information about the length of the transmission.
  It contains the following fields:
  - Preamble
    Pre-defined sequence (4 byte, value `0x00000000`) used to adjust the receiver to the transmission of the sender
  - Start of frame
    Pre-defined symbol (1 byte, value `0xA7`) identifying the start of the actual data frame
  - Length of frame
    1 byte indicating the combined length of all following fields

- MAC Header
  The MAC header provides detailed information about the frame.
  It contains the following fields:
  - Frame control field
    2 bytes (always `0x0801`) which identify frame type, protocol version, addressing and security mode
  - Sequence number
    1 byte sequential number to identify the order of transmitted frames
  - Address
    PAN ID and address of source (if present) and destination of the telegram
    PTM 215ZE does not use source address and source PAN ID

- MAC Payload
  The MAC payload is based on the ZigBee Green Power standard. It contains telegram control, device ID, telegram data and telegram security fields.

- MAC Trailer
  The MAC Trailer contains the Frame Check Sum (FCS) field used to verify the integrity of the telegram data.

Figure 5 below summarizes the IEEE 802.15.4 frame structure.

802.15.4 PHY Header			802.15.4 MAC Header			802.15.4 Payload (ZigBee Green Power Protocol)			802.15.4 MAC Trailer
Preamble	Start of Frame	Length of Frame	Frame Control	Sequence Number	DstAddress PAN | Addr	ZGP Header	ZGP Payload	ZGP Trailer	Frame Check Sum (FCS)
4 Byte 0x00:00:00:00	1 Byte 0xA7	1 Byte	2 Byte 0x01:08	1 Byte	4 Byte 0xFFFF | 0xFFFF	10 Byte	28 Byte (COM) 1 Byte (DATA)	4 Byte	2 Byte

Figure 5 – IEEE 802.15.4 Frame Structure

The content of these fields is described in more detail below.

3.2.1 PHY Header

The IEEE 802.15.4 PHY header consists of the following fields:

- Preamble
- Start of Frame
- Length of Frame fields

The content of the *Preamble* and *Start of Frame* fields is fixed for all telegram types supported by PTM 215ZE as follows:

- Preamble = `0x00000000`
- Start of Frame = `0xA7`

The content of the *Length of Frame* field differs depending on the telegram type as follows:

- Commissioning telegram
  Length= 42 bytes (`0x2A`)
- Data telegram
  Length = 24 bytes (`0x18`)

3.2.2 MAC Header

The IEEE 802.15.4 MAC Header contains the following fields:

- Frame Control Field (2 byte)
  The *Frame Control Field* is set to `0x0801` in all PTM 215ZE telegrams in order to identify them as data telegrams with short addresses based on version IEEE 802.15.4-2003

- Sequence Number (1 byte)
  The *Sequence Number* is an incremental number used to identify the order of telegrams

- Address Field (4 byte in PTM 215ZE implementation)
  The *Address Field* is set to `0xFFFFFFFF` to identify PTM 215ZE telegrams as broadcast telegrams using short Destination Address (16 Bit) together with the Destination PAN ID (16 Bit). Source address and Source PAN ID are not present in PTM 215ZE MAC Header.

3.2.3 MAC Trailer

The MAC Trailer only contains the Frame Check Sum (FCS) field.

Its length is 2 byte and it is calculated as Cyclic Redundancy Check (CRC16) over the entire MAC payload including the *Length of Frame* field of the PHY Header using the following polynomial: $x^{16} + x^{12} + x^5 + 1$

3.3 Payload Structure

The MAC Payload is encoded to be compatible with the zigbee Green Power protocol. Figure 6 below shows the MAC Payload structure for data telegrams.

Telegram Control	Source ID	Sequence Counter	Command	Telegram Signature
2 Byte	4 Byte	4 Byte	1 Byte	4 Byte

Figure 6 – MAC Payload structure for data telegrams

The following fields are used for the MAC Payload of data telegrams:

- Telegram Control (2 byte)
  The *Telegram Control* field is set to `0x308C` to identify a secure telegram with device-unique key

- Source ID (4 byte)
  The *Source ID* field contains a 4 byte ID uniquely identifying each PTM 215ZE device

- Sequence Counter (4 byte)
  The *Sequence Counter* field contains an always incrementing counter.
  Security processing is based on the combination of the Command and Sequence Counter in order to prevent replay attacks (sending the same telegram again)

- Command (1 byte)
  The *Command* field is a one byte field which identifies the state of the PTM 215ZE contacts. For the encoding please refer to Table 2 below.

- Telegram Signature (4 byte)
  The *Telegram Signature* field is used to validate the telegram authenticity. The telegram signature is calculated based on the telegram payload using AES128 (CBC mode). For details, see chapter 4

In addition to data telegrams, PTM 215ZE can also transmit commissioning telegrams as described in chapter 5.3

3.3.1 Button Contact Encoding

Table **2** below shows the supported single and dual button contact actions of PTM 215ZE together with the encoding used for the transmission.

In this table, the meaning of "0" and "1" is the following for press and release events:

- "0"
  Button is not pressed upon push
  Button was not pressed before release

- "1"
  Button is pressed upon push
  Button was pressed before release

A0	A1	B0	B1	Energy Bar	Command
0	0	0	0	Press	0x10
0	0	0	0	Release	0x11
0	0	0	1	Press	0x12
0	0	0	1	Release	0x13
0	0	1	0	Press	0x14
0	0	1	0	Release	0x15
0	1	0	0	Press	0x18
0	1	0	0	Release	0x19
1	0	0	0	Press	0x22
1	0	0	0	Release	0x23
0	0	1	1	Press	0x16
0	0	1	1	Release	0x17
0	1	0	1	Press	0x1A
0	1	0	1	Release	0x1B
0	1	1	0	Press	0x1C
0	1	1	0	Release	0x1D
1	0	0	1	Press	0x1E
1	0	0	1	Release	0x1F
1	0	1	0	Press	0x62
1	0	1	0	Release	0x63
1	1	0	0	Press	0x64
1	1	0	0	Release	0x65

Table 2 - PTM 215ZE button contact status encoding

4 Telegram Authentication

PTM 215ZE implements telegram authentication for data telegrams to ensure that only telegrams from senders using a previously exchanged security key will be accepted. Authentication relies on a 32 bit telegram signature which is calculated as shown in Figure 7 below and exchanged as part of the radio telegram.

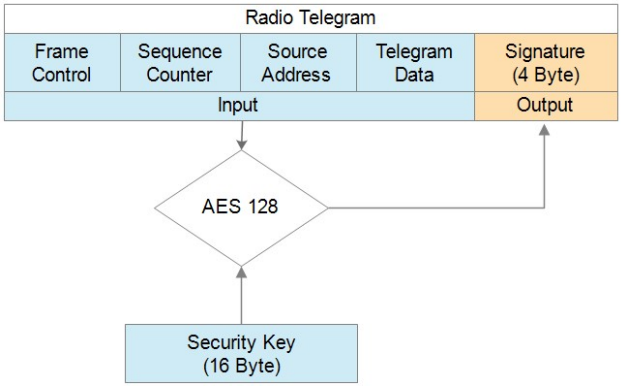

Figure 7 – Telegram authentication flow

Sequence counter, source address and the remaining telegram data together form the input data for the signature algorithm. This algorithm uses AES128 encryption based on the device-unique random security key to generate a 32 bit signature which will be transmitted as part of the radio telegram.

The signature is therefore dependent both on the current value of the sequence counter, the device source address and the telegram payload. Changing any of these three parameters will therefore result in a different signature.

The receiver performs the same signature calculation based on sequence counter, source address and the remaining telegram data of the received telegram using the security key it received from PTM 215ZE during commissioning.

The receiver then compares the signature reported as part of the telegram with the signature it has calculated. If these two signatures match then the following statements are true:

- Sender (PTM 215ZE) and receiver use the same security key
- The message content (address, sequence counter, data) has not been modified

In order to avoid message replay (capture and retransmission of a valid message), it is required that the receiver tracks the value of the sequence counter used by PTM 215ZE and only accepts messages with higher sequence counter values (i.e. not accepts equal or lower sequence counter values for subsequent telegrams).

4.1 Authentication Implementation

PTM 215ZE implements telegram authentication according to the ZigBee Green Power specification. It uses AES128 in CCM (Counter with CBC-MAC) mode as described in IETF RFC3610. At the time of writing, the RFC3610 standard could be found here: https://www.ietf.org/rfc/rfc3610.txt

The 13 Byte CCM Nonce (number used once – unique) initialization value is constructed as concatenation of 4 byte Device ID, 4 byte Device ID again, 4 byte Sequence Counter and 1 status byte of value 0x05.

Note that both Device ID and Sequence Counter use little endian format (least significant byte first).

Figure 8 below shows the structure of the AES128 Nonce.

AES128 Nonce (13 Byte)												
Device ID				Device ID				Sequence Counter				STATUS
Byte 0	Byte 1	Byte 2	Byte 3	Byte 0	Byte 1	Byte 2	Byte 3	Byte 0	Byte 1	Byte 2	Byte 3	0x05

Figure 8 – AES128 Nonce structure

The AES128 Nonce and the 128 bit device-unique security key are then used to calculate a 32 bit signature of the authenticated telegram payload shown in Figure 9 below.

Authenticated Data (11 Byte)										
Frame Control		Source ID				Sequence Counter				Command
0x8C	0x30	Byte 0	Byte 1	Byte 2	Byte 3	Byte 0	Byte 1	Byte 2	Byte 3	Byte 0

Figure 9 – Authenticated payload

The calculated 32 bit signature is then appended to the data telegram payload as shown in chapter 3.3.

The security key required for the telegram authentication can be obtained in two ways:

- Product DMC code
  Each PTM 215ZE device contains a product label with a DMC code that identifies the Source ID and the Private Security Key used by this device, see below.

- Commissioning telegram
  The security key is transmitted as part of the commissioning telegram, see chapter 5.3

5 Commissioning

Commissioning is used to commission (teach-in, learn in) PTM 215ZE into a specific receiver or network. To do so, PTM 215ZE provides two key functions:

- Transmission of a commissioning telegram in order to learn-in PTM 215ZE into a network
- Radio channel selection in order to set the radio channel of PTM 215ZE to that used by the network

These functions are described subsequently in more detail.

5.1 Commissioning Mode Entry

Commissioning mode is entered using a special button contact sequence. This is illustrated in Figure 10 below.

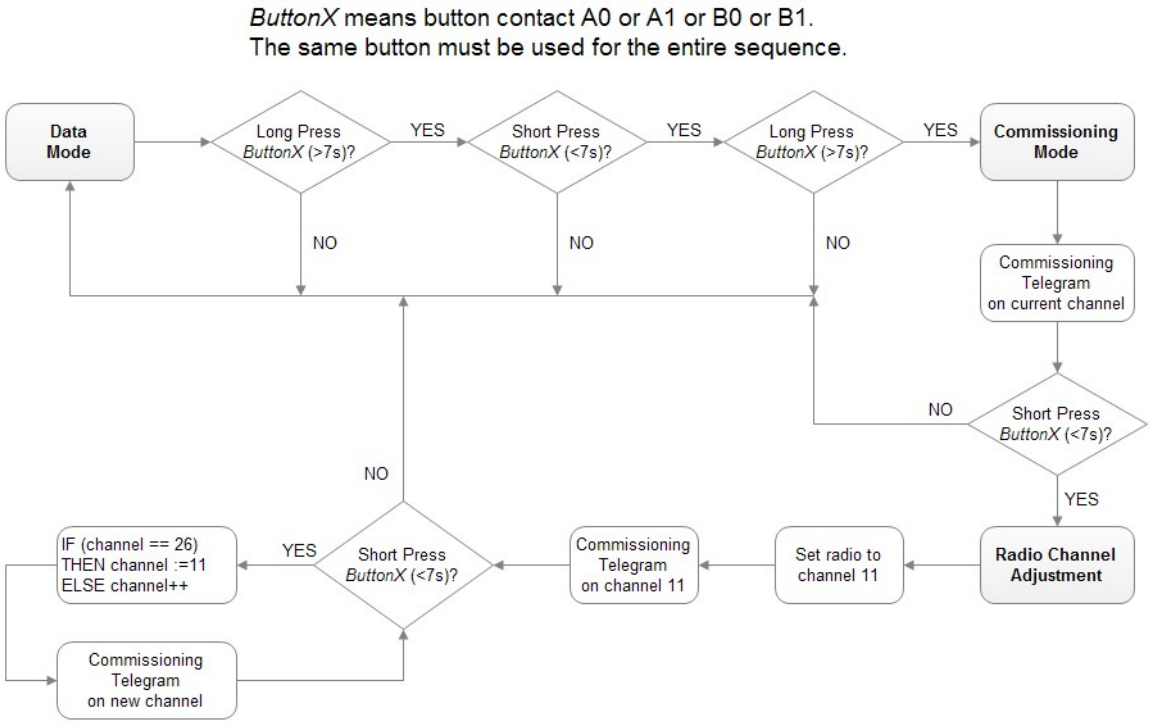

Figure 10 – Button sequence for commissioning mode

To enter commissioning mode, start by selecting one button contact of PTM 215ZE. Any contact of PTM 215ZE (A0, A1, B0, B1) can be used. This contact is referred to as *ButtonX* in Figure 10 above.

Next, execute the following long-short-long sequence:

1. Press and hold the selected button contact together with the energy bar for more than 7 seconds before releasing it

2. Press the selected button contact together with the energy bar quickly (hold for less than 2 seconds)

3. Press and hold the selected button contact together with the energy bar again for more than 7 seconds before releasing it

Upon detection of this sequence, PTM 215ZE will enter commissioning mode and transmit a commissioning telegram on the current radio channel.

Sometimes the user might be unsure if PTM 215ZE is operating in normal mode or in commissioning mode and if part of the entry sequence into commissioning mode has already been executed.

PTM 215ZE can always be set into a defined state (normal mode) by shortly (< 7s) pressing two different buttons one after another. After that, PTM 215ZE will operate in data mode and the full sequence for commissioning mode entry (long-sort-long) has to be executed to enter commissioning mode.

5.2 Commissioning Telegram Transmission

PTM 215ZE will transmit a commissioning telegram on the current radio channel immediately upon entering commissioning mode. This allows teach-in into additional devices without changing the currently used radio channel.

The default radio channel used by PTM 215ZE is channel 11 (see chapter 3). It can be subsequently adjusted as described in the following chapter.

Whenever a new radio channel is selected, PTM 215ZE will transmit a commissioning telegram on the new radio channel. This enables the receiver to provide feedback to the user to indicate when PTM 215ZE has reached the correct radio channel (i.e. when the receiver receives a commissioning telegram from PTM 215ZE on the radio channel the receiver is using). See chapter 5.5 for a discussion of feedback mechanisms.

The format of PTM 215ZE radio telegrams including commissioning telegrams is described below.

5.3 Commissioning Telegram Format

Figure 11 below shows the MAC payload structure for commissioning telegrams.

Telegram Control	Source ID	Commissioning Command	Device Type	Device Options	Device-unique Security Key	Security Key Validation	Sequence Counter
1 Byte	4 Byte	1 Byte	1 Byte	2 Byte	16 Byte	4 Byte	4 Byte

Figure 11 – MAC Payload structure for commissioning telegrams

The following fields are used for commissioning telegrams:

- Telegram Control (1 byte)
  The *Telegram Control* field is set to `0x0C` to identify a standard telegram (secure communication will be established based on the commissioning telegram)

- Source ID (4 bytes)
  The *Source ID* field contains a 4 byte ID uniquely identifying each PTM 215ZE device

- Command (1 byte)
  The *Command* field is set to 0xE0 to identify this command as commissioning command

- Device Type (1 byte)
  The *Device Type* field is set to `0x02` to identify PTM 215ZE as ON / OFF switch

- Device Options (2 byte)
  The *Device Options* field is set to `0xF281` to identify the device as PTM 215ZE communicating securely using the AES128 (CBC mode) algorithm and a 4 byte sequence counter to generate a 4 byte signature

- Encrypted Device-unique Security Key (16 bytes)
  Each PTM 215ZE contains a random, device-specific security key which is generated as part of the production flow. During commissioning, this key is transmitted in encrypted form as specified by the zigbee Green Power specification.

- Security Key Validation (4 bytes)
  In order to ensure correct reception, an additional 4 byte validation value is provided.

- Sequence Counter (4 bytes)
  The *Sequence Counter* is an always incrementing counter which is used as part of the security processing to avoid replay attacks (sending the same telegram again).
  Receiving devices shall only accept data telegrams with sequence counter values higher than that of the last received telegram; therefore the current value needs to be communicated during commissioning.

5.3.1 Commissioning Telegram Example

Below is an example of the MAC payload of a commissioning telegram from a PTM 215ZE device:

```
0C FB 02 50 01 E0 02 81 F2 88 42 0A 19 66 16 6C 7A A2 15 B2 B7 72 18 BD A3 0F 32 8C
32 27 00 00 00
```

The three most relevant fields for commissioning are marked red in the example above:

- Source ID
  Note that this is transmitted in little endian format, i.e. the actual Source ID is `0x015002FB`

- Encrypted security key
  This the encrypted version of the actual security key; the encryption is implemented according to the zigbee Green Power specification

- Sequence Counter
  Note that this is transmitted in little endian format, i.e. the actual Sequence Counter is `0x00000027`

For a description how to decode the encrypted security key please refer to the zigbee Green Power specification.

5.4 Radio Channel Adjustment

The radio channel used by PTM 215ZE can be changed whenever PTM 215ZE is in commissioning mode. Refer to chapter 3 for a summary of the supported radio channels.

In order to change the radio channel, press the selected button contact shortly (< 7s) once after entry into commissioning mode. This will reset the radio channel used by PTM 215ZE to channel 11 and enable subsequent channel adjustment.

If PTM 215ZE was already operating on channel 11 (default condition) then the radio channel will remain unchanged. This ensures that PTM 215ZE will always use channel 11 as starting point for the radio channel adjustment.

The radio channel can now be incremented by continuing to press the selected button contact shortly (< 7s). For each such button press, the radio channel is incremented. If channel 26 has been reached, then channel 11 will be used next.

5.4.1 Adjustment examples

Example 1: PTM 215ZE operating on channel 11 (out of the box condition)

In this case, PTM 215ZE would send a commissioning telegram on channel 11 immediately after detecting the long-short-long sequence.

After that, it would for each additional short button press send commissioning telegrams on incrementing radio channels starting with channel 11.

This means that the channel sequence would be:
11 (current channel) - 11 – 12 – 13 … 25 – 26 – 11 – 12 and so on

Example 2: PTM 215ZE operating on channel 15

In this case, PTM 215ZE would send a commissioning telegram on channel 15 immediately after detecting the long-short-long sequence.

After that, it would for each additional button press send commissioning telegrams on incrementing radio channels starting with channel 11.

This means that the channel sequence would be:
15 (current channel) - 11 – 12 – 13 … 25 – 26 – 11 – 12 and so on

5.5 Determining The Correct Radio Channel

The user requires system feedback to determine if the correct radio channel has been reached.

Several methods are possible for that, including:

- Feedback from the device into which PTM 215ZE is learned in
  E.g. blinking a status light, toggling a connected load, moving a motor etc.

- Feedback from a dedicated user interface
  This could for instance instruct the user on the required key sequence and confirm correct execution

It is the responsibility of the system designer to define a suitable feedback mechanism.

5.6 Radio Channel Storage And Return To Data Mode

If PTM 215ZE has been successfully set to the desired radio channel, then this radio channel has to be stored and operation should return to data mode.

This is achieved by pressing any button contact other than the one used for entry into commissioning mode (and channel change). So if button contact A0 was used to enter commissioning mode then pressing button contact A1, B0 or B1 will cause storing of the current radio channel and return to data mode.

Failure to store the selected radio channel and to return to normal mode could cause accidental reconfiguration of PTM 215ZE.

6 Device Integration

PTM 215ZEZ implements NFC Forum Type 2 Tag functionality as specified in the ISO/IEC 14443 Part 2 and 3 standards using an NXP NT3H2111 Mifare Ultralight tag.

This NFC functionality can be used to access (read and write) the PTM 215ZE configuration memory and thereby configure the device as described in the following chapters.

Chapter 6.1 below gives an introduction to the NFC functionality and options to use the NFC interface. For in-depth support for integrating the NXP NT3H2111 NFC functionality into PC or smartphone SW please contact NXP technical support.

6.1 Using the NFC interface

Using the NFC interface requires the following:

- NFC reader (either PC USB accessory or suitable smartphone / tablet)
- NFC SW with read, write, PIN lock, PIN unlock and PIN change functionality

EnOcean recommends TWN4 (order code T4BT-FB2BEL2-SIMPL) from Elatec RFID Systems (https://www.elatec-rfid.com/en/) as USB NFC reader. This reader is shown in Figure 12 below.

Figure 12 – Elatec TWN4 MultiTech Desktop NFC Reader

TWN4 can be configured as CDC / Virtual COM port and can then be accessed like any serial interface. It provides all necessary commands for the NFC interface, specifically to:

- Read data from configuration memory and write data to configuration memory
- Authenticate the user (to allow read / write of protected memory) via 32 bit PIN

NFC functionality is also available in certain Android smartphones and tablets. NXP provides a SW framework that can be used with Android devices and can advise regarding suitable tablets and smartphones.

NFC communication distance is for security reasons set to require direct contact between reader and switches based on PTM 215ZE.

6.2 NFC interface functions

For a detailed description about the NFC functionality, please refer to the ISO/IEC 14443 standard.

For specific implementation aspects related to the NXP implementation in NT3H2111, please refer to the NXP documentation which at the time of writing was available under this link:
https://www.nxp.com/docs/en/data-sheet/NT3H2111_2211.pdf

The following chapters summarize the different functions for reference purposes.

6.3 NFC interface state machine

Figure 13 below shows the overall state machine of the NFC interface.

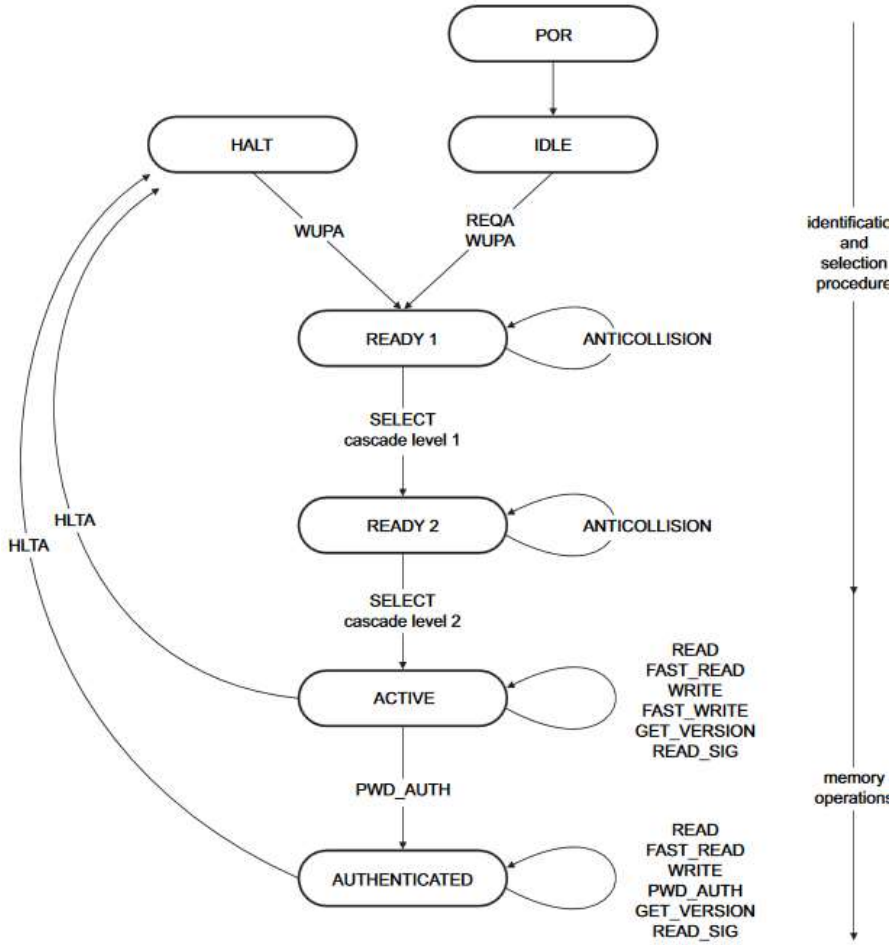

Figure 13 – NFC interface state machine

6.3.1 IDLE state

IDLE is the waiting state after a Power-On Reset (POR), i.e. after the NFC tag has been introduced into the magnetic field of the NFC reader.

The NFC tag exits the IDLE state towards the READY 1 state when either a REQA or a WUPA command is received from the NFC reader. REQA and WUPA commands are transmitted by the NFC reader to determine whether any cards are present within its working range.

Any other data received by the NFC tag while in IDLE state is discarded and the NFC tag will remain in IDLE state.

6.3.2 READY 1 state

READY 1 is the first UID resolving state where the NFC tag resolves the first 3 bytes of the 7 byte UID using the ANTICOLLISION or SELECT commands for cascade level 1.

READY 1 state is exited after the SELECT command from cascade level 1 with the matching complete first part of the UID has been executed. The NFC tag then proceeds into READY 2 state where the second part of the UID is resolved.

6.3.3 READY 2 state

READY 2 is the second UID resolving state where the NFC tag resolves the remaining 4 bytes of the 7 byte UID using the ANTICOLLISION or SELECT commands for cascade level 2.

READY 2 state is exited after the SELECT command from cascade level 2 with the matching complete part of the UID has been executed. The NFC tag then proceeds into ACTIVE state where the application-related commands can be executed.

6.3.4 ACTIVE state

ACTIVE state enables read and write accesses to unprotected memory.

If access to protected memory is required, then the tag can transition from the ACTIVE state to AUTHENTICATED state by executing the PWD_AUTH command in conjunction with the correct 32 bit password.

6.3.5 Read command

The READ command requires a start page address, and returns the 16 bytes of four NFC tag pages (where each page is 4 byte in size).

For example, if the specified address is `03h` then pages `03h`, `04h`, `05h`, `06h` are returned. Special conditions apply if the READ command address is near the end of the accessible memory area.

Figure 14 below shows the read command sequence.

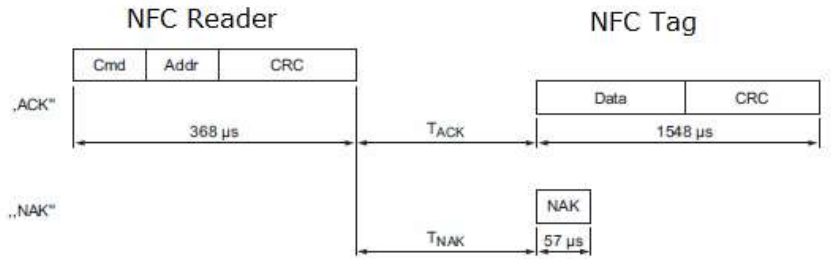

Figure 14 – NFC read command sequence

6.3.6 Write command

The WRITE command requires a start page address and returns writes 4 bytes of data into that page.

Figure 15 below shows the read command sequence.

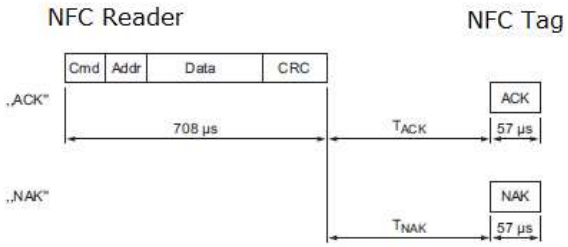

Figure 15 – NFC write command sequence

6.3.7 Password authentication (PWD_AUTH) command

The protected memory area can be accessed only after successful password verification via the PWD_AUTH command.

The PWD_AUTH command takes the password as parameter and, if successful, returns the password authentication acknowledge, PACK.

Figure 16 below shows the password authentication sequence.

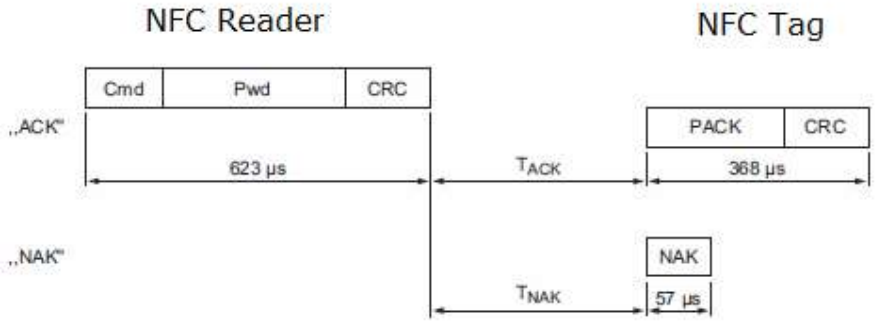

Figure 16 – Password authentication sequence

After successful authentication, the password can be changed by writing the new password to memory page `0xE5`.

Note that a read access to page `0xE5` always return `0x00000000`, i.e. it is not possible to read out the current PIN code.

7 Device Integration

PTM 215ZE is designed for integration into button or rocker-based switches with manual activation (press and release by user input). It implements the established PTM 2xx mechanical form factor and can therefore be used with a wide variety of existing designs.

7.1 Mechanical Interface Characteristics

Energy bow travel / operating force	1.8 mm / typ. 10 N At room temperature Only one of the two energy bows may be actuated at the same time!
Restoring force at energy bow	typ. 0.7 N Minimum restoring force of 0.5 N is required for correct operation
Number of operations at 25°C	typ. 100.000 actuations tested according to VDE 0632 / EN 60669
Cover material	Hostaform (POM)
Energy bow material	PBT (50% GV)

7.2 Mechanical Interface Drawings

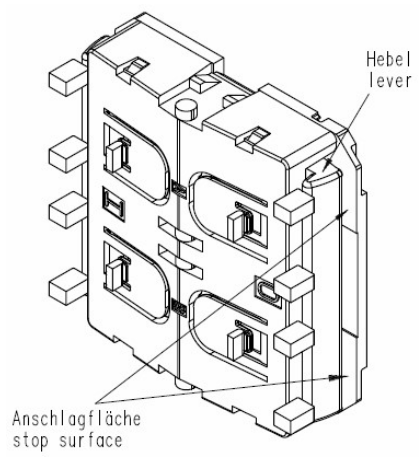

Figure 17 – PTM 215ZE, tilted view (including rocker catwalks)

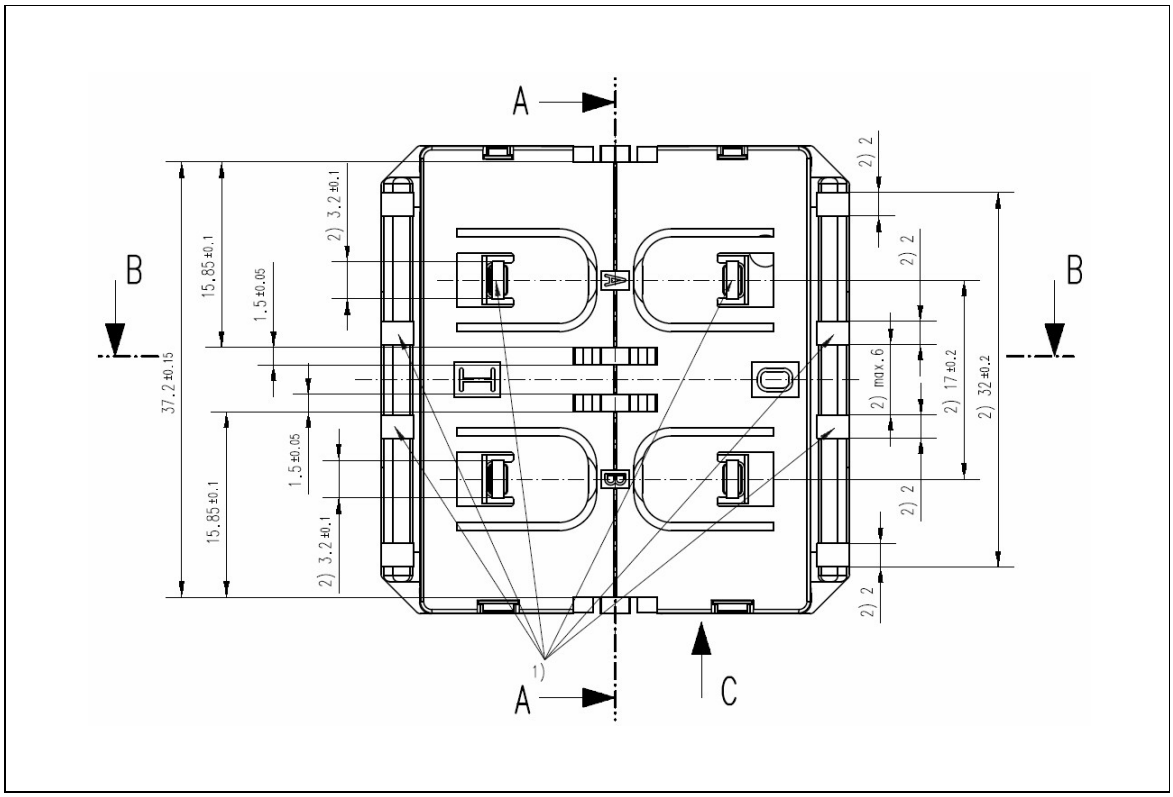

1) these catwalks are not needed when using one single rocker only 2) dimensions of rocker part

Figure 18 – PTM 215ZE, top view (note cut A, B and C marking)

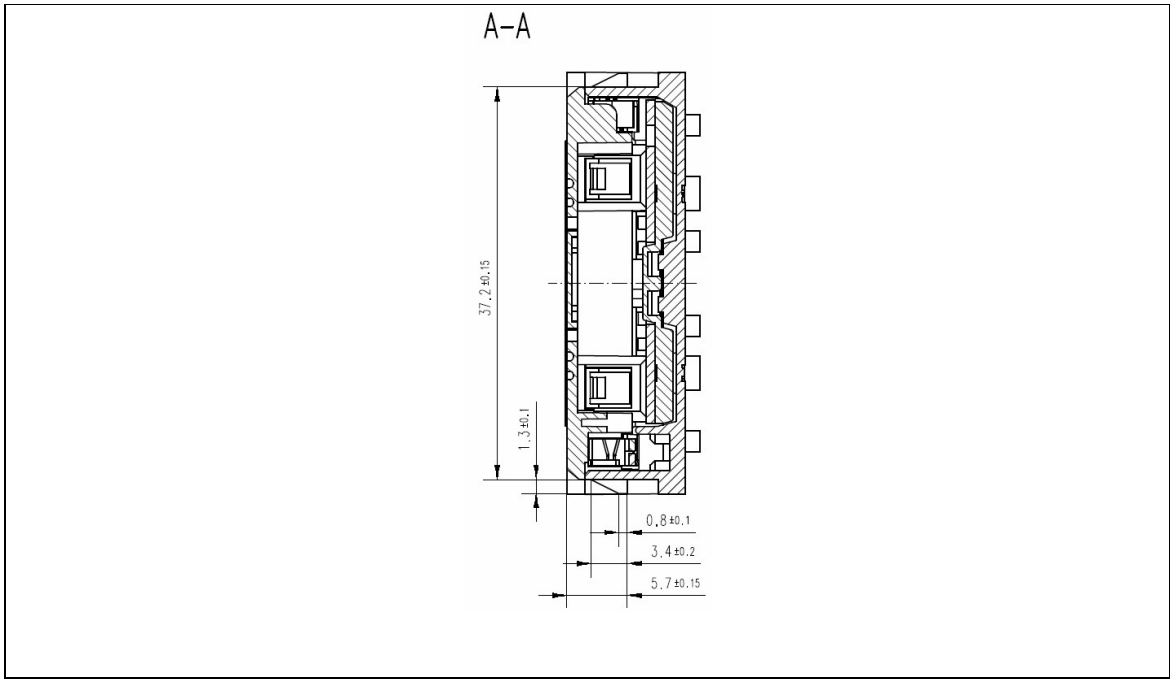

Figure 19 – PTM 215ZE, cut A

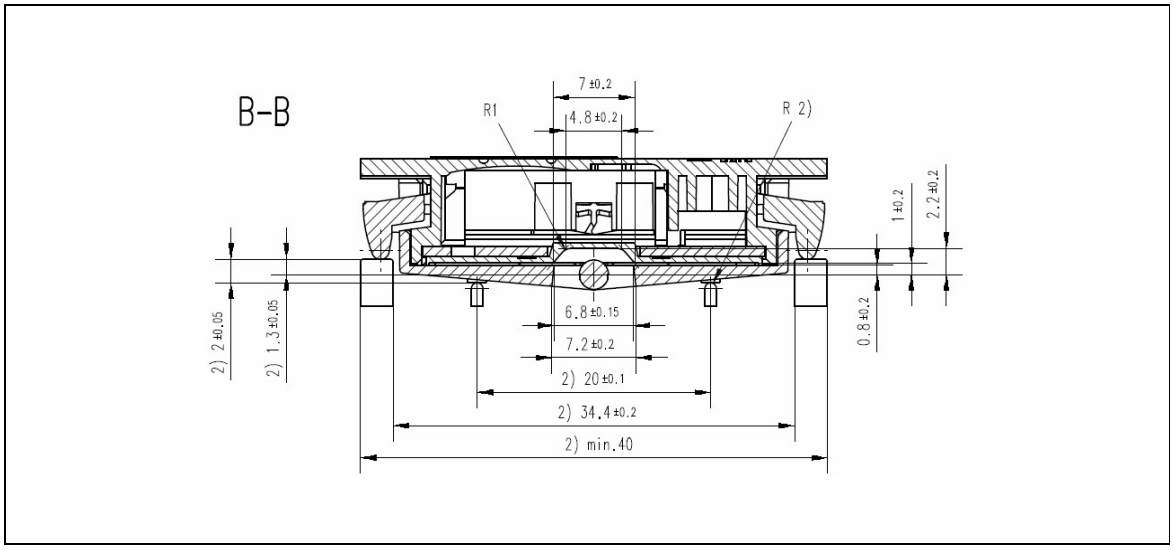

2) dimensions of rocker part

Figure 20 – PTM 215ZE, cut B and C

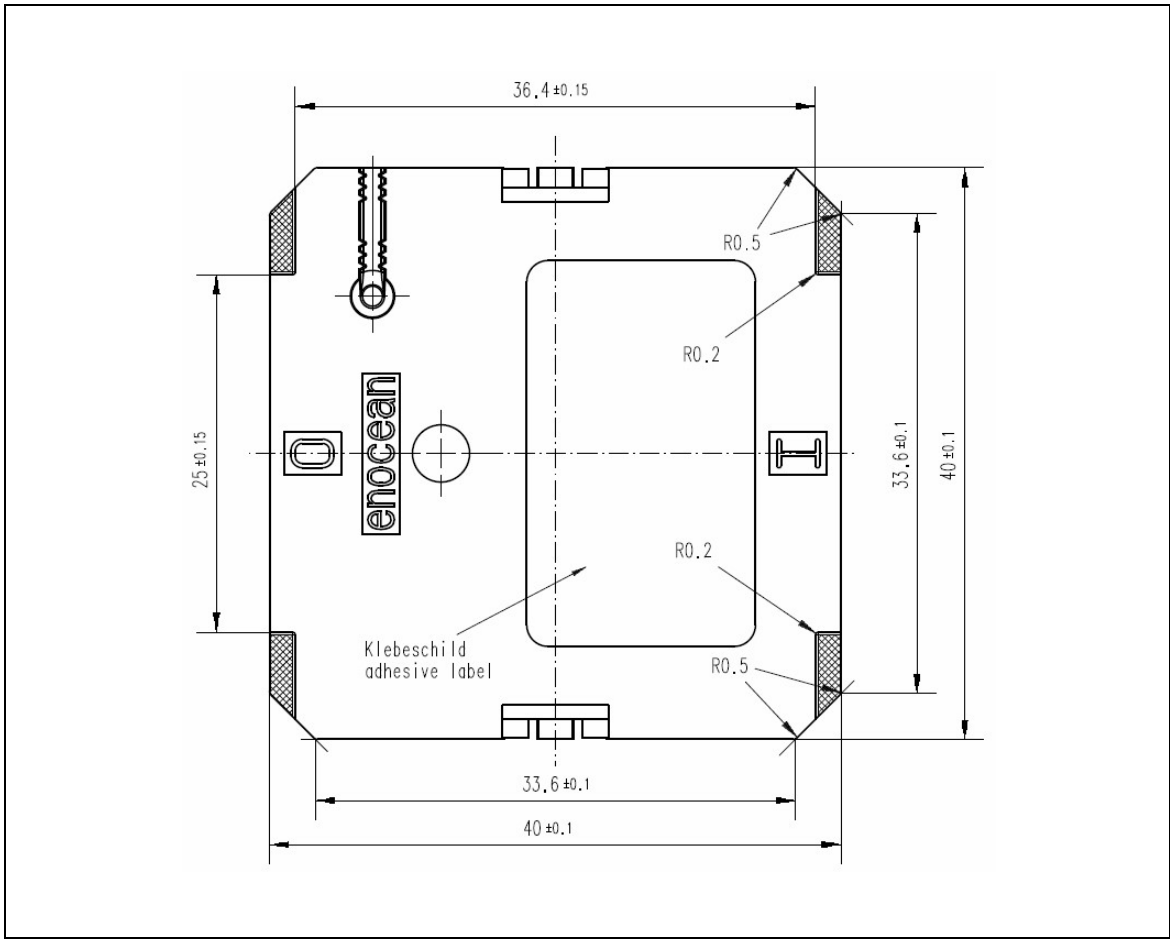

Hatched areas: support planes

Figure 21 – PTM 215ZE rear view

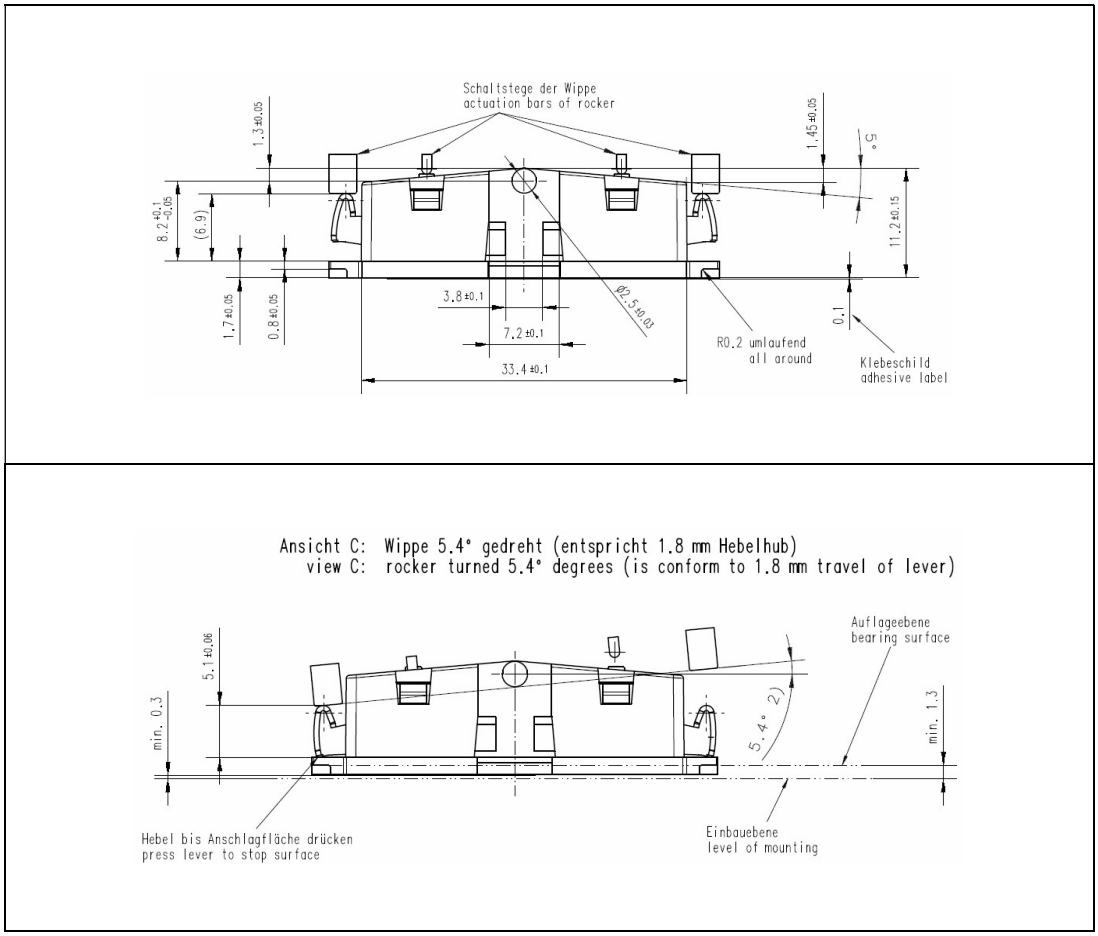

2) dimensions of rocker part

Figure 22 – PTM 215ZE, side view

If the rocker is not mounted on the rotation axis of PTM 215ZE several tolerances have to be considered! The measure from support plane to top of the energy bow is 7.70 mm +/- 0.3 mm!

The movement of the energy bow must not be limited by mounted rockers!

Catwalks of the switch rocker must not exert continuous forces on the button contacts!

It is required to use non-conductive material (no metal or plastic with metal or graphite elements) for the rockers, the frame and the base plate to ensure best transmission range.

PTM 215ZE is powered by the electromagnetic generator ECO 200. For proper function there has to be a keep out zone of 60mm for magnets or ferromagnetic materials around the center of PTM 215ZE.

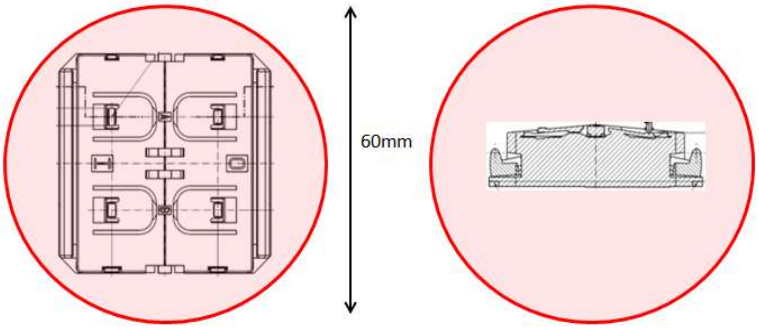

7.3 Device Label

Each PTM 215ZE module contains a product label identifying key parameters such as manufacturing date, device ID and an optically readable code that can be used to automatically scan device parameters as shown in Figure 23 below.

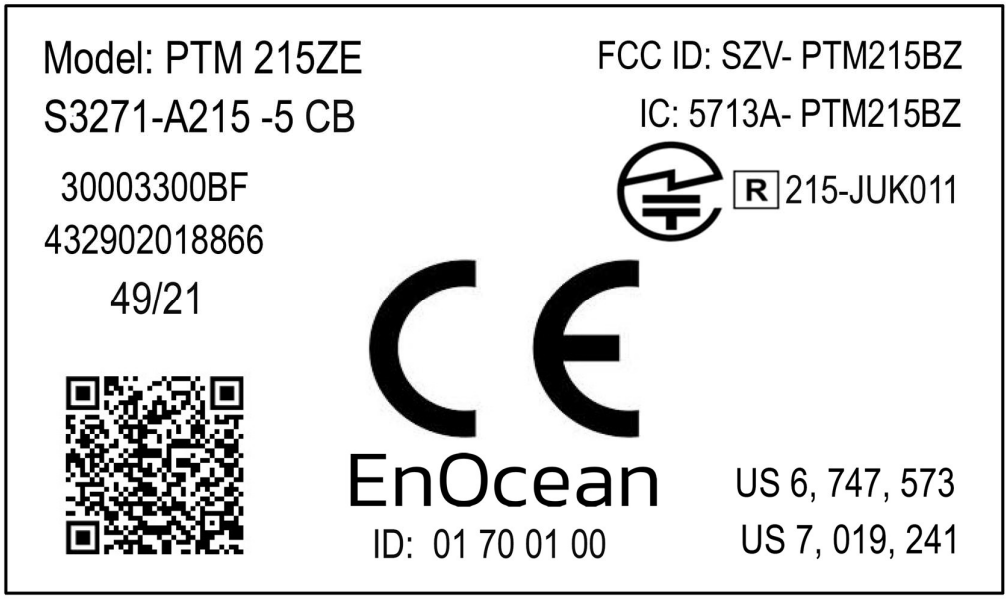

Figure 23 – PTM 215ZE device label

7.3.1.1 QR Code Format

The QR code used in the new product label encodes the product parameter according to the ANSI/MH10.8.2-2013 industry standard. The QR code shown in Figure 23 above encodes the following string:

```
30S01700100+Z0123456789ABCDEF0123456789ABCDEF+30PS3271-A215+2PDA03+S01432902018866
```

Table 3 below describes the ANSI/MH10.8.2 data identifiers used by the PTM 215B device label and shows the interpretation of the data therein.

Identi-fier	Length of data (excluding identifier)	Value
30S	8 characters	Source Address (hex)
Z	32 characters	Security Key (hex)
30P	10 characters	Ordering Code (S3271-A215)
2P	4 characters	Step Code - Revision (DA-03)
S	14 characters	Serial Number

Table 3 – QR code format

8 Application Information

8.1 Transmission Range

The main factors that influence the system transmission range are:
- Type and location of the antennas of receiver and transmitter
- Type of terrain and degree of obstruction of the link path
- Sources of interference affecting the receiver
- "Dead spots" caused by signal reflections from nearby conductive objects.

Since the expected transmission range strongly depends on this system conditions, range tests should always be performed to determine the reliably achievable range under the given conditions.

The following figures should be treated as a rough guide only:

- Line-of-sight connections
  Typically 15 m range in corridors, up to 50 m in halls

- Plasterboard walls / dry wood
  Typically 15 m range, through max. 2 walls

- Ferro concrete walls / ceilings
  Maximum 1 wall or ceiling, depending on thickness and material

- Fire-safety walls, elevator shafts, staircases and similar areas should be considered as shielded

The angle at which the transmitted signal hits the wall is very important. The effective wall thickness – and with it the signal attenuation – varies according to this angle. Signals should be transmitted as directly as possible through the wall. Wall niches should be avoided.

Other factors restricting transmission range include:
- Switch mounting on metal surfaces (up to 30% loss of transmission range)
- Hollow lightweight walls filled with insulating wool on metal foil
- False ceilings with panels of metal or carbon fibre
- Lead glass or glass with metal coating, steel furniture

The distance between the receiver and other transmitting devices such as computers, audio and video equipment that also emit high-frequency signals should be at least 0.5 m.

9 Regulatory Information

PTM 215ZE has been certified according to FCC (US), ISED (Canada) and RED (Europe) regulations. Changes or modifications not expressly approved by EnOcean could void the user's authority to operate the equipment.

9.1 RED for the European Market

The Radio Equipment Directive (2014/53/EU, typically referred to as RED) replaces R&TTE directive from 1999 as regulatory framework for radio products in the European Union. All products sold to final customers after 12th of June 2017 have to be compliant to RED. At the time of writing, the text of the RED legislation was available from this link: http://eur-lex.europa.eu/eli/dir/2014/53/oj

Dolphin radio modules are components which are delivered to OEM manufacturers for their use/integration in final or combined products. It is the responsibility of the OEM manufacturer to demonstrate compliance to all applicable EU directives and standards. The EnOcean attestation of conformity can be used as input to the declaration of conformity for the full product.

At the time of writing, guidance on the implementation of EU product rules – the so called "Blue Guide" – was available from this link:
http://ec.europa.eu/DocsRoom/documents/18027/

Specifically, within the new RED framework, all OEM manufacturers have for instance to fulfill the following additional requirements:

- Provide product branding (on the product) clearly identifying company name or brand and product name as well as type, charge or serial number for market surveillance
- Include (with the product) documentation containing full postal address of the manufacturer as well as radio frequency band and max. transmitting power
- Include (with the product) user manual, safety information and a declaration of conformity for the final product in local language
- Provide product development and test documentation upon request

Please contact an accredited test house for detailed guidance.

9.2 FCC (United States) Certificate

9.2.1 FCC (United States) Regulatory Statement

This device complies with Part 15 of the FCC rules. Operation is subject to the following two conditions:

1. This device may not cause harmful interference, and
2. This device must accept any interference received, including interference that may cause undesired operation.

To comply with FCC/IC RF exposure limits for general population / uncontrolled exposure, the antenna(s) used for this transmitter must be installed to provide a separation distance of at least 20 cm from all persons and must not be co-located or operating in conjunction with any other antenna or transmitter

Warning
Changes or modifications not expressly approved by the party responsible for compliance could void the user's authority to operate the equipment.

Interference
This equipment has been tested and found to comply with the limits for a Class B digital device, pursuant to Part 15 of the FCC Rules. These limits are designed to provide reasonable protection against harmful interference in a residential installation.

This equipment generates uses and can radiate radio frequency energy and, if not installed and used in accordance with the instructions, may cause harmful interference to radio communications. However, there is no guarantee that interference will not occur in a particular installation.

If this equipment does cause harmful interference to radio or television reception, which can be determined by turning the equipment off and on, the user is encouraged to try to correct the interference by one of the following measures:

- Reorient or relocate the receiving antenna.
- Increase the separation between the equipment and receiver.
- Connect the equipment into an outlet on a circuit different from that to which the receiver is connected.
- Consult the dealer or an experienced radio/TV technician for help.

9.3 ISED (former Industry Canada) Certificate

9.3.1 ISED (former Industry Canada) Regulatory Statement

9.3.1.1 English version

WARNING: Changes or modifications not expressly approved by the party responsible for compliance could void the user's authority to operate the equipment.

This device complies with Industry Canada license-exempt RSS standard(s). Operation is subject to the following two conditions:

1. This device may not cause interference, and
2. This device must accept any interference, including interference that may cause undesired operation of the device.

This equipment has been tested and found to comply with the limits for a Class B digital device, pursuant to ICES-003. These limits are designed to provide reasonable protection against harmful interference in a residential installation.

This equipment generates uses and can radiate radio frequency energy and, if not installed and used in accordance with the instructions, may cause harmful interference to radio communications. However, there is no guarantee that interference will not occur in a particular installation.

If this equipment does cause harmful interference to radio or television reception, which can be determined by turning the equipment off and on, the user is encouraged to try to correct the interference by one of the following measures:

- Reorient or relocate the receiving antenna.
- Increase the separation between the equipment and receiver.
- Connect the equipment into an outlet on a circuit different from that to which the receiver is connected.
- Consult the dealer or an experienced radio/TV technician for help

9.3.1.2 French version

PRUDENCE: Changements ou modifications pourraient annuler le droit de l'utilisateur à utiliser l'équipement non autorisées.

Le présent appareil est conforme aux CNR d'Industrie Canada applicables aux appareils radio exempts de licence. L'exploitation est autorisée aux deux conditions suivantes:

1. L'appareil ne doit pas produire de brouillage, et
2. L'utilisateur de l'appareil doit accepter tout brouillage radioélectrique subi, même si le brouillage est susceptible d'en compromettre le fonctionnement.

Cet équipement a été testé et déclaré conforme aux limites d'un appareil numérique de classe B, conformément à la norme ICES-003. Ces limites sont conçues pour fournir une protection raisonnable contre les interférences nuisibles dans une installation résidentielle.

Cet équipement génère, utilise et peut émettre une énergie de radiofréquence et, s'il n'est pas installé et utilisé conformément a ux instructions, il peut causer des interférences nuisibles aux communications radio. Cependant, il n'existe aucune garantie que des interférences no se produiront pas dans une installation particulière.

Si cet équipement provoque des interférences nuisibles à la réception radio ou télévision, ce qui peut être déterminé en mettant l'équipement hors et sous tension, l'utilisateur est encouragé à essayer de corriger l'interférence par une ou plusieurs des mesures suivantes:

- Réorienter ou déplacer l'antenne de réception.
- Augmentez la distance entre l'équipement et le récepteur.
- Connecter l'équipement à une sortie sur un circuit différent de celui sur lequel le récepteur est branché.
- Consulter le revendeur ou un technicien radio / télévision expérimenté pour de l'aide

10 Product history

Table 4 below lists the product history of PTM 215ZE.

Revision	Release date	Key changes versus previous revision
DA-01	May 2022	Product release to lead customers

Table 4 – Product History

11 References

(Zigbee Green Power Specification) Zigbee Green Power Specification

(IEEE802154) IEEE 802.15.4 Specification

(RFC3610) RFC3610 Specification