PTM 216B Bluetooth® Pushbutton Transmitter Module

17 March 2022

Observe precautions! Electrostatic sensitive devices!

Patent protected:
WO98/36395, DE 100 25 561, DE 101 50 128, WO 2004/051591, DE 103 01 678 A1, DE 10309334, WO 04/109236, WO 05/096482, WO 02/095707, US 6,747,573, US 7,019,241

PTM 216B – BLUETOOTH® PUSHBUTTON TRANSMITTER MODULE

REVISION HISTORY

The following major modifications and improvements have been made to this document:

Version	Author	Reviewer	Date	Major Changes
1.0	MKA	MK	04.02.2022	Initial Release

Published by EnOcean GmbH, Kolpingring 18a, 82041 Oberhaching, Germany
www.enocean.com, info@enocean.com, phone +49 (89) 6734 6890
© EnOcean GmbH, All Rights Reserved

The Bluetooth® word mark and logos are registered trademarks owned by the Bluetooth SIG, Inc. and any use of such marks by EnOcean GmbH is under license. Other trademarks and trade names are those of their respective owners.

Important!

This information describes the type of component and shall not be considered as assured characteristics. No responsibility is assumed for possible omissions or inaccuracies. Circuitry and specifications are subject to change without notice. For the latest product specifications, refer to the EnOcean website: http://www.enocean.com.

As far as patents or other rights of third parties are concerned, liability is only assumed for modules, not for the described applications, processes and circuits. EnOcean does not assume responsibility for use of modules described and limits its liability to the replacement of modules determined to be defective due to workmanship. Devices or systems containing RF components must meet the essential requirements of the local legal authorities. The modules must not be used in any relation with equipment that supports, directly or indirectly, human health or life or with applications that can result in danger for people, animals or real value.

Components of the modules are considered and should be disposed of as hazardous waste. Local government regulations are to be observed. Packing: Please use the recycling operators known to you.

TABLE OF CONTENT

1. General description 6
1.1 Basic functionality 6
1.2 Technical data 7
1.3 Environmental conditions 7
1.4 Packaging information 7
1.5 Ordering information 7
2. Functional information 8
2.1 Product overview 8
2.2 Basic functionality 8
2.3 Functional block diagram 9
2.4 User Interface 10
3. Telegram transmission 11
3.1 Radio channel parameters 11
3.2 Default radio transmission sequence 12
3.3 User-defined radio transmission sequences 12
3.3.1 Supported radio transmission sequences 13
3.3.2 Three-channel radio transmission sequence 13
3.3.3 Two-channel radio transmission sequence 14
3.3.4 Single-channel radio transmission sequence 14
4. Telegram format 15
4.1 Preamble 15
4.2 Access Address 15
4.3 Header 15
4.4 Source address 16
4.4.1 Static source address mode 16
4.4.2 Resolvable private address mode 17
4.5 Check Sum 18
4.6 Telegram payload 19
4.6.1 Data telegram payload 19
4.6.2 Button action encoding 20
4.6.3 Commissioning telegram payload 21
4.7 PTM 216B data telegram authentication 22
4.7.1 Authentication implementation 23
5. Commissioning 24
5.1 NFC-based commissioning 25
5.2 Camera-based commissioning 26
5.3 Radio-based commissioning 26
5.3.1 Commissioning mode entry 26
5.3.2 Commissioning telegram transmission 27
5.3.3 Exit from commissioning mode 27
5.3.4 Disable commissioning mode 27
5.4 Factory reset 28
6. NFC interface 29
6.1 Using the NFC interface 29
6.2 NFC interface functions 30
6.2.1 NFC interface state machine 30
6.2.2 IDLE state 31

6.2.3 READY 1 state 31
6.2.4 READY 2 state 31
6.2.5 ACTIVE state 31
6.2.6 Read command 32
6.2.7 Write command 32
6.2.8 Password authentication (PWD_AUTH) command 33
6.3 Using TWN4 as USB NFC reader 34
6.3.1 Useful commands 35
6.3.2 Translation into binary data 35
6.4 Configuration memory organization 36
6.5 NFC memory address map 37
6.6 Public data 38
6.7 Protected data 39
6.7.1 PIN code 40
6.7.2 Configuration of product parameters 40
6.7.3 CONFIGURATION register 40
6.7.4 SOURCE_ADDRESS_WRITE register 41
6.7.5 SECURITY_KEY1 register 41
6.7.6 Private Security Key mode 42
6.7.7 OEM_NAME_WRITE and MANUFACTURER_ID_WRITE register 42
6.7.8 OPTIONAL_DATA register 43
6.7.9 VARIANT register 44
6.7.10 Radio channel selection registers 46
6.7.11 Customer Data 47
6.8 Private data 48
6.8.1 Security key 48
6.8.2 Default settings 48
7. PTM 216B device label 49
7.1 PTM 216B device label structure 49
7.2 QR code format 50
8. Device integration 51
8.1 Mechanical interface characteristics 51
8.2 Mechanical interface drawings 51
8.3 OEM product QR code 57
8.3.1 Example for an OEM product QR code 57
9. Application information 58
9.1 Transmission range 58
9.2 Receiver configuration 59
9.2.1 Advertising interval 60
9.2.2 Scan window 60
9.2.3 Scan interval 61
9.2.4 Summary 61
10. Regulatory information 62
10.1 RED for European Market 62
10.2 FCC (United States) Certificate 63
10.2.1 FCC (United States) Regulatory Statement 64
10.3 IC (Industry Canada) Certificate 65
10.3.1 IC (Industry Canada) Regulatory Statement 66
10.4 ACMA (Australia) Declaration of Conformity 68
10.5 ARIB (Japan) Construction Type Conformity Certifaction 69

10.6 India Equipment Type Approval 70
11. Product history 71
A. Parsing PTM 216B radio telegrams 72
A.1 Data telegram example 72
A.1.1 BLE frame structure 72
A.1.2 EnOcean data telegram payload structure 72
A.2 Commissioning telegram example 73
A.2.1 BLE frame structure 73
A.2.2 EnOcean commissioning telegram payload structure 73
B. Address resolution for resolvable private addresses (RPA) 74
B.1.1 RPA resolution flow 74
B.1.2 Address resolution example 75
C. Authentication of PTM 216B data telegrams 76
C.1 Algorithm input parameters 76
C.1.1 Constant input parameters 76
C.1.2 Variable input parameters 77
C.1.3 Obtaining the security key 78
C.1.3.1 Obtaining the security key via NFC interface 78
C.1.3.2 Obtaining the security key via the product QR code 79
C.1.3.3 Obtaining the security key via a commissioning telegram 79
C.1.4 Internal parameters 80
C.1.5 Constant internal parameters 80
C.1.6 Variable internal parameters 81
C.2 Algorithm execution sequence 81
C.3 Examples 82
C.3.1 Data telegram without optional data 82
C.3.2 Data telegram with 1 byte optional data 84
C.3.3 Data telegram with 2 byte optional data 85
C.3.4 Data telegram with 4 byte optional data 86

1. General description

1.1 Basic functionality

PTM 216B enables the realization of energy harvesting wireless switches for lighting, building or industrial automation control systems using Bluetooth® low energy technology.

PTM 216B is uses the standard EnOcean PTM 210 form factor enabling quick integration into a wide range of designs. Key applications are wall-mounted or portable switches either with up to two rockers or up to four push buttons.

PTM 216B pushbutton transmitters are self-powered (no batteries) and fully maintenance-free. They can therefore be used in all environments including locations that are difficult to reach or within hermetically sealed housings. The required energy is generated by an electro-dynamic energy transducer actuated by an energy bow located on the left and right of the module. This energy bow which can be pushed from outside the module by an appropriate pushbutton or switch rocker.

When the energy bow is pushed down or released, electrical energy is created and a radio telegram according to the Bluetooth® low energy standard is transmitted. This radio telegram transmits the status of all four contact nipples when the energy bow was pushed down or released. PTM 216B radio telegrams are protected with AES-128 security based on a device-unique private key.

PTM 216B is available in the following variants:

- PTM 216B
  Stand-alone module without additional components for OEM integration
- EWSSB / EWSDB
  PTM 216B integrated into European-style single / double rocker wall switch housing
- ESRPB / EDRPB
  PTM 216B integrated into US-style single or double rocker pad housing

The term "PTM 216B" as used in this document applies to all product variants unless otherwise mentioned. Figure 1 below shows from left to right the PTM 216B module, the EWSSB / EWSDB European wall switches and the ESRPB / EDRPB US-style rocker pads.

Figure 1 – PTM 216B, EWSSB/EWSDB and ESRPB/EDRPB

1.2 Technical data

Antenna	Integrated PCB antenna
Max. transmit power measured	+6 dBm / 4 mW
Communication Range (guidance only)	75 m ideal line of sight / 10 m indoor environment
Communication Standard	Bluetooth Low Energy (BLE)
Radio Frequency (min / max)	2402 MHz / 2480 MHz
Radio Channels (default)	CH 37 / 38 / 39 (2402 MHz / 2426 MHz / 2480 MHz)
Data Rate and Modulation	1 Mbit/s GFSK (default) / 2 Mbit GFSK (NFC option)
Configuration Interface	NFC Forum Type 2 Tag (ISO/IEC 14443 Part 2 and 3)
Device Identification	Unique 48 Bit Device ID (factory programmed)
Security	AES128 (CBC Mode) with Sequence Code
Power Supply	Integrated Kinetic Energy Harvester
Button Inputs	Up to four buttons or two rockers
Dimensions	40.0 x 40.0 x 11.2 mm
Weight	20 g +/- 1g

1.3 Environmental conditions

Operating Temperature	-25°C ... 65°C
Storage Temperature	-25°C ... 65°C
Humidity	0% to 95% r.h. (non-condensing)

1.4 Packaging information

Packaging Unit	100 units
Packaging Method	Tray / Box (10 units per tray, 10 trays per box)

1.5 Ordering information

Type	Ordering Code	Description
PTM 216B	S3221-A215	Module only
EWSSB	E8221-A270	Wall Switch (Single Rocker, see separate documentation)
EWSDB	E8221-A280	Wall Switch (Double Rocker, see separate documentation)
ESRPB	ESRPB-W-EO	Rocker Pad (Single Rocker, see separate documentation)
EDRPB	EDRPB-W-EO	Rocker Pad (Double Rocker, see separate documentation)

2. Functional information

2.1 Product overview

The pushbutton transmitter module PTM 216B from EnOcean enables the implementation of wireless remote controls without batteries. It transmits Bluetooth Low Energy (BLE) data telegrams where the required energy is provided by a built-in electro-dynamic energy generator.

The PTM 216B product outline with key functional components is shown in Figure 2 below.

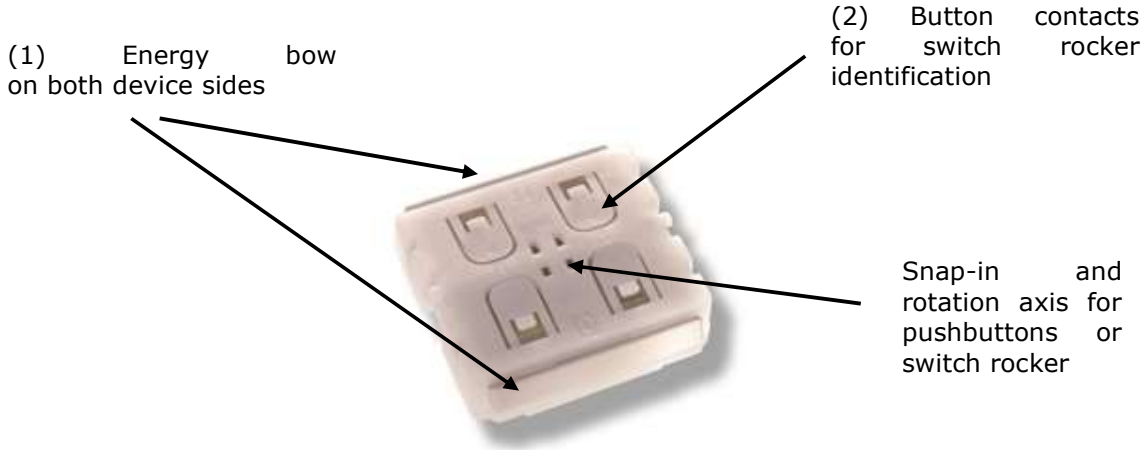

Figure 2 – PTM 216B Product Outline

2.2 Basic functionality

PTM 216B devices contain an electro-dynamic energy converter which is actuated by an energy bow (1). This bow is pushed by an appropriate push button, switch rocker or a similar construction mounted onto the device. An internal spring will release the energy bow as soon as it is not pushed down anymore.

When the energy bow is pushed down, electrical energy is created and a BLE radio telegram is transmitted which identifies the action (pressed or not pressed) and the status of the four button contacts (2). Releasing the energy bow similarly generates energy which is used to transmit a different radio telegram.

It is therefore possible to distinguish between radio telegrams sent when the energy bar was pushed and radio telegrams sent when the energy bar was released.

By identifying these different telegrams types and measuring the time between pushing and releasing of the energy bar, it is possible to distinguish between “Long” and “Short” button contact presses. This enables simple implementation of applications such as dimming control or blinds control including slat action.

2.3 Functional block diagram

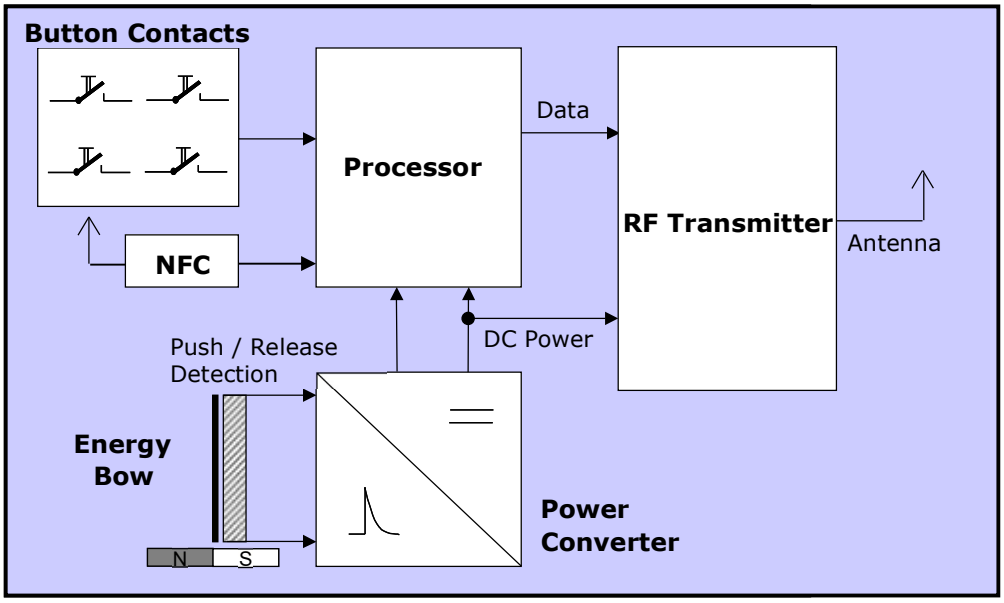

Figure 3 – Functional block diagram of PTM 216B

Energy Bow / Power Generator
Converts the motion of the energy bow into electrical energy

Power Converter
Converts the energy of the power generator into a stable DC supply voltage for the device electronics

Processor
Determines the status of the button contacts and the energy bow, encodes this status into a data word, generates the proper radio telegram structure and sends it to the radio transmitter

RF transmitter
Transmits the data in the form of a series of short 2.4 GHz Bluetooth Low Energy radio telegrams using the integrated antenna

NFC interface
Allows reading and writing certain product parameters using an NFC compliant reader / writer supporting NFC Forum Type 2 tags (as specified by ISO/IEC 14443 Part 2 and 3).

2.4 User Interface

PTM 216B devices provide four button contacts. They are grouped into two channels (Channel A and Channel B) each containing two button contacts (State O and State I).

The state of all four button contacts (pressed or not pressed) is transmitted together with a unique device identification (48 Bit device ID) whenever the energy bow is pushed or released.

Figure 4 below shows the arrangement of the four button contacts and their designation:

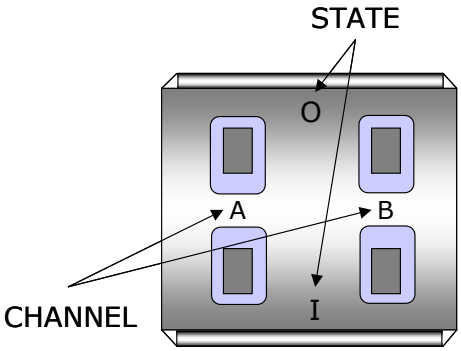

Figure 4 – Button contact designation

3. Telegram transmission

3.1 Radio channel parameters

PTM 216B transmits Bluetooth Low Energy (BLE) advertising telegrams within the 2.4 GHz radio frequency band (2402MHz … 2480MHz).

By default, PTM 216B will use the three BLE advertising channels (BLE Channel 37, 38 and 39) defined for transmission. The transmission of a radio telegram on these three advertising channels is called an Advertising Event.

Use of different radio channels within the frequency band from 2402 MHz to 2480 MHz is possible, see chapter 6.7.10.

The initialization value for data whitening is set as follows:

- For BLE channels is set according to specification (value = radio channel)
- For the custom radio channels the initialization value is equal to the offset from 2400 MHz (e.g. value = 3 for 2403 MHz)

Table 1 below summarizes radio channels supported by PTM 216B.

Radio Channel	Frequency	Channel Type
BLE Radio Channels		
37	2402 MHz	BLE Advertising Channel
0	2404 MHz	BLE Data Channel
1	2406 MHz	BLE Data Channel
…		
10	2424 MHz	BLE Data Channel
38	2426 MHz	BLE Advertising Channel
11	2428 MHz	BLE Data Channel
12	2430 MHz	BLE Data Channel
…		
36	2478 MHz	BLE Data Channel
39	2480 MHz	BLE Advertising Channel
Custom Radio Channels		
40	2403 MHz	Custom Radio Channel
41	2405 MHz	Custom Radio Channel
…		
77	2477 MHz	Custom Radio Channel
78	2479 MHz	Custom Radio Channel

Table 1 – PTM 216B supported radio channels

3.2 Default radio transmission sequence

PTM 216B transmits telegrams in its standard configuration by using so-called Advertising Events.

An advertising event is defined as the transmission of the same radio telegram on all selected radio channels (by default this would be on BLE Channel 37, 38 and 39) one after another with minimum delay in between.

For reliability reasons, PTM 216B will send several (minimum two, maximum three) advertising events for each button input. The resulting transmission sequence is shown in Figure 5 below.

The default interval between the advertising events is 20 ms. Starting with product version DC-06 it is possible to reduce this interval to 10 ms via the NFC configuration interface. See chapter 6.7.9 for details.

CH 37	CH 38	CH 39	INTERVAL (20ms or 10ms)	CH 37	CH 38	CH 39	INTERVAL (20ms or 10ms)	CH 37	CH 38	CH 39

Figure 5 – Default radio transmission sequence

3.3 User-defined radio transmission sequences

In certain situations, it might be desirable to transmit radio telegrams on channels other than the three advertising channels.

PTM 216B therefore allows to select the radio channels to be used for the transmission of data telegrams and commissioning telegrams. The following transmission modes are supported:

- Both commissioning telegrams and data telegrams are transmitted on the advertising channels as three advertising events. This is the default configuration and described in chapter 3.2 above.
- Commissioning telegrams are transmitted on the advertising channels as three advertising events while data telegrams are transmitted in a user-defined sequence as described below.
- Both commissioning and data telegrams are transmitted in a user-defined sequence as described below.

The selection of the transmission mode is done using the `VARIANT` register of the NFC configuration interface as described in chapter 6.7.9.

3.3.1 Supported radio transmission sequences

PTM 216B supports the following user-defined sequences:

- Three channel sequence
  This sequence is similar to the default Advertising Event with the difference that the user can select the radio channels to be used. The three-channel sequence is described in chapter 3.3.2 below.

- Two channel sequence
  In this sequence the radio telegram is transmitted using four transmissions on two radio channels. It is described in chapter 3.3.3 below.

- One channel sequence
  In this sequence the radio telegram is transmitted using six transmissions on one radio channel. It is described in chapter 3.3.4 below.

The selection of user-defined radio transmission sequences is made via the `VARIANT` register of the NFC configuration interface, please see chapter 6.7.9.

3.3.2 Three-channel radio transmission sequence

The three-channel radio transmission sequence is similar to the default transmission sequence. The difference is that the radio channels (BLE Channel 37, 38 and 39 in the default transmission sequence) can be selected using the registers `TX_CHANNEL1`, `TX_CHANNEL2` and `TX_CHANNEL3`.

The PTM 216B telegram will in this mode be transmitted on the radio channel selected by `TX_CHANNEL1` first, immediately followed by a transmission on the radio channel selected by `TX_CHANNEL2` and a transmission on the radio channel selected by `TX_CHANNEL3`.

This transmission sequence will be sent three times in total as shown in Figure 6 below.

The default interval between the advertising events is 20 ms. Starting with product version DC-06 it is possible to reduce this interval to 10 ms via the NFC configuration interface. See chapter 6.7.9 for details.

TX_CHANNEL1	TX_CHANNEL2	TX_CHANNEL3	INTERVAL (20ms or 10ms)	TX_CHANNEL1	TX_CHANNEL2	TX_CHANNEL3	INTERVAL (20ms or 10ms)	TX_CHANNEL1	TX_CHANNEL2	TX_CHANNEL3

Figure 6 – Three channel radio transmission sequence

The format of `TX_CHANNEL1`, `TX_CHANNEL2` and `TX_CHANNEL3` is described in chapter 6.7.10.

3.3.3 Two-channel radio transmission sequence

The two-channel radio transmission sequence removes transmission on the third radio channel (selected by TX_CHANNEL3) and instead repeats the transmission once more (four times in total).

The PTM 216B telegram will in this mode be transmitted on the radio channel selected by TX_CHANNEL1 first, immediately followed by a transmission on the radio channel selected by TX_CHANNEL2.

This two-channel transmission sequence will be sent four times in total as shown in Figure 7 below.

The default interval between the advertising events is 20 ms. Starting with product version DC-06 it is possible to reduce this interval to 10 ms via the NFC configuration interface. See chapter 6.7.9 for details.

TX_CHANNEL1	TX_CHANNEL2	INTERVAL (20ms or 10ms)	TX_CHANNEL1	TX_CHANNEL2	INTERVAL (20ms or 10ms)	TX_CHANNEL1	TX_CHANNEL2	INTERVAL (20ms or 10ms)	TX_CHANNEL1	TX_CHANNEL2

Figure 7 – Two channel radio transmission sequence

The format of TX_CHANNEL1 and TX_CHANNEL2 is described in chapter 6.7.10.

3.3.4 Single-channel radio transmission sequence

The single-channel radio transmission sequence removes transmission on the second and third radio channel (selected by TX_CHANNEL2 and TX_CHANNEL3 respectively), i.e. all transmissions will be on the radio channel selected by TX_CHANNEL1.

The PTM 216B telegram will be sent six times on this radio channel as shown in Figure 8 below.

The default interval between the advertising events is 20 ms. Starting with product version DC-06 it is possible to reduce this interval to 10 ms via the NFC configuration interface. See chapter 6.7.9 for details.

TX_CHANNEL1	INTERVAL (20ms or 10ms)	TX_CHANNEL1	INTERVAL (20ms or 10ms)	TX_CHANNEL1	INTERVAL (20ms or 10ms)	TX_CHANNEL1	INTERVAL (20ms or 10ms)	TX_CHANNEL1	INTERVAL (20ms or 10ms)	TX_CHANNEL1

Figure 8 – Single channel radio transmission sequence

The format of TX_CHANNEL1 is described in chapter 6.7.10.

4. Telegram format

PTM 216B transmits Bluetooth Low Energy (BLE) radio telegrams in the 2.4 GHz band. For detailed information about the Bluetooth Low Energy standard, please refer to the applicable specifications.

Figure 9 below summarizes the BLE frame structure.

Preamble 0xAA	Access Address 0x8E89BED6	Header (2 Byte)	Source Address (6 Byte)	Payload (0 … 31 Byte)	Check Sum (3 Byte)

Figure 9 – BLE frame structure

The content of these fields is described in more detail below.

4.1 Preamble

The BLE Preamble is 1 byte long and identifies the start of the BLE frame. The value of the BLE Preamble is always set to `0xAA`.

4.2 Access Address

The 4 byte BLE Access Address identifies the radio telegram type. For advertising frames, the value of the Access Address is always set to `0x8E89BED6`.

4.3 Header

The BLE Header identifies certain radio telegram parameters. Figure 10 below shows the structure of the BLE header.

Bit 15 (MSb) … Bit 0 (LSb)

UNUSED (2 Bit)	LENGTH (6 Bit)	RX ADDR (1 Bit)	TX ADDR (1 Bit)	UNUSED (2 Bit)	TYPE (4 Bit)
00	Length of Address + Payload	0: Not used	1: Random	00	0010: TX-only Advertising (ADV_NONCONN_IND)

Figure 10 – BLE header structure

4.4 Source address

The 6 byte BLE Source Address (MAC address) uniquely identifies each PTM 216B product.

PTM 216B supports two source address modes:

- Static Source Address mode (default)
  In this mode, the source address is constant (but its lower 32 bit can be configured via NFC interface)

- Resolvable Private Address mode (NFC configurable option)
  In this mode, the source address changes for each transmission

By default, PTM 216B uses Static Source Address mode. Private Resolvable Address mode can be selected by setting the `Private Source Address` flag in the `Configuration` register (see chapter 6.7.3) to `0b1`.

These two address modes are described in the following chapters.

4.4.1 Static source address mode

By default, PTM 216B uses static source addresses meaning that the source address is constant during normal operation. The static source address can be read and configured (written) via NFC as described in chapter 6.

The structure of PTM 216B static addresses is as follows:

- The upper 2 bytes of the source address are used to identify the device type and set to `0xE215` for all PTM 216B devices (to designate EnOcean PTM 215 device type). These two bytes cannot be changed.

- The lower 4 bytes are uniquely assigned to each device. They can be changed using the NFC configuration interface as described in chapter 6.7.4

Figure 11 below illustrates the static address structure used by PTM 216B.

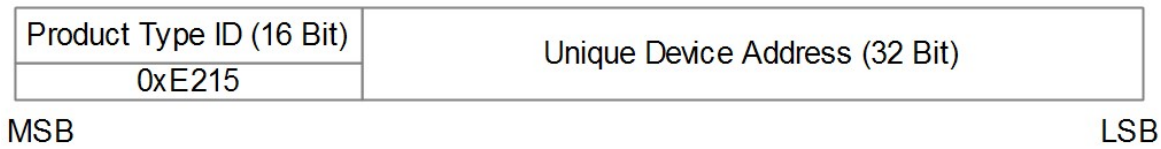

Figure 11 – BLE static source address structure

4.4.2 Resolvable private address mode

For some applications it is desirable to obfuscate the origins of PTM 216B data telegrams in order to prevent tracking of its radio transmissions. This can be achieved by using resolvable private addresses (RPA) as defined in the Bluetooth Core Specification.

PTM 216B can be configured to use resolvable private addresses by setting the `RPA ADDRESS MODE` flag within the `Configuration` register (described in chapter 6.7.3) to `0b1`.

When using resolvable private addresses, the address used by PTM 216B is modified (rotated) according to a defined scheme which on one hand precludes determining the device identity by unauthorized receivers while allowing authorized receivers (sharing a specific security key with PTM 216B) to do so.

The shared security key – which has to be known by both PTM 216B and the authorized receiver – is called the Identity Resolution Key (IRK). PTM 216B uses its device-unique random key as identity resolution key. This key can be modified if needed via the NFC configuration interface as described in chapter 6.7.5.

For each data telegram transmitted by PTM 216B (i.e. for every button push or release), a new resolvable private address is generated. The 48 bit address field of such resolvable private address is split into two sub-fields:

- `prand`
  This field contains a random number which always starts (two most significant bits) with 0b10. The `prand` value is changed for each telegram that is transmitted. Individual advertising events used to transmit one telegram (as described in chapter 3) use the same `prand` value.

- `hash`
  This field contains a verification value (hash) generated from `prand` using the IRK

The structure of a resolvable private address is shown in Figure 12 below.

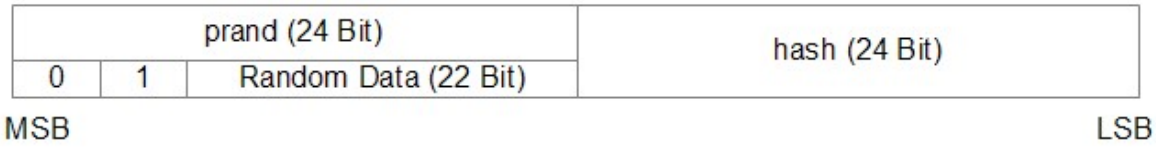

Figure 12 – BLE resolvable private address structure

The `prand` value is encrypted using the IRK. The lowest 24 bit of the result (encrypted value) are then used as `hash`. The concatenation of 24 bit `prand` and 24 bit `hash` will be transmitted as 48 bit private resolvable source address.

The receiver maintains a list of IRK for all transmitters that have been commissioned to work with it.

Whenever the receiver receives a data telegram with a resolvable private address (identified by the most significant bits of the address field being set to `0b10`), it will itself generate a 24 bit `hash` from the 24 bit `prand` sequentially using each IRK known to it (i.e. the IRK of each device that has been learned into it).

If an IRK matches (i.e. when `prand` is encoded with the IRK then the result matches `hash`), then the receiver has established the IRK used by the transmitter and thereby the identity of the transmitter.

So conceptually the IRK takes the role of the device address of the transmitter while `prand` and `hash` provide a mechanism for the receiver to select the correct IRK among the set of IRK known to it.

This mechanism is illustrated in Figure 13 below.

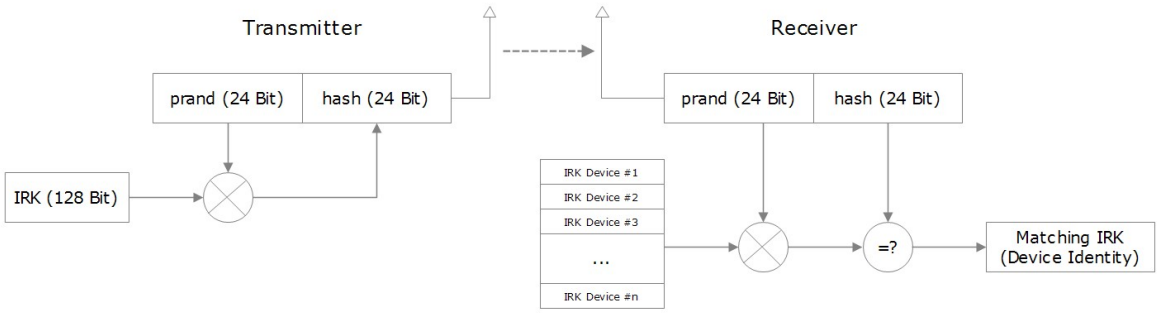

Figure 13 – Resolving private addresses

Refer to Appendix B for an example of resolving a resolvable private address.

Note that commissioning telegrams (as described in chapter 5.3.2) always use static source addresses (as described in chapter 4.4.1) since they establish the device identity and contain the IRK in the payload.

4.5 Check Sum

The 3 byte BLE Check Sum is used to verify data integrity of received BLE radio telegrams. It is calculated as CRC (cyclic redundancy check) of the BLE Header, Source Address and Payload fields.

4.6 Telegram payload

PTM 216B can transmit two types of telegrams:

- Data telegrams
  The payload of data telegrams contains the switch status together with optional data (if applicable), the current sequence counter value and the resulting authentication signature

- Commissioning telegrams
  The payload of commissioning telegrams contains the private security key as well as the current value of the sequence counter and the device address

The payload structure of both telegram types is described in the following chapters.

4.6.1 Data telegram payload

The payload of data telegrams is 13 … 17 bytes long (depending on the size of the Optional Data field) and consists of the following fields:

- Length (1 byte)
  The Length field specifies the combined length of the following fields. The content of the field depends on the size of the Optional Data field (which can be 0 / 1 / 2 or 4 byte). The resulting Length setting would be 12 / 13 / 14 or 16 byte (`0x0C` / `0x0D` / `0x0E` / `0x10`) respectively

- Type (1 byte)
  The Type field identifies the data type used for this telegram. For PTM 216B data telegrams, this field is always set to `0xFF` to designate manufacturer-specific data field

- Manufacturer ID (2 byte)
  The Manufacturer ID field is used to identify the manufacturer of BLE devices based on assigned numbers. EnOcean has been assigned `0x03DA` as manufacturer ID code. The Manufacturer ID can be changed via the NFC configuration interface as described in chapter 6.7.7.

- Sequence Counter (4 byte)
  The Sequence Counter is a continuously incrementing counter used for security processing. It is initialized to `0` at the time of production and incremented for each telegram (data telegram or commissioning telegram) sent.

- Switch Status (1 byte)
  The Switch Status field reports the button action. The encoding of this field is described in chapter 4.6.2.

- Optional Data (0 / 1 / 2 or 4 byte)
  PTM 216B provides the option to transmit additional user-defined data within each data telegram as described in chapter 6.7.8.

- Security Signature (4 byte)
  The Security Signature is used to authenticate PTM 216B radio telegrams as described in chapter 4.6.3

Figure 14 below illustrates the data telegram payload.

0x0C ... 0x10	0xFF	Manufacturer ID 0x03DA	Sequence Counter (4 Byte)	Switch Status	Optional Data (0/1/2/4 Byte)	Security Signature (4 Byte)
LEN	TYPE					

Figure 14 – Data telegram payload structure

4.6.2 Button action encoding

The `Switch Status` field within the data telegram payload identifies the PTM 216B button action (button push or release). PTM 216B uses the following sequence to identify and transmit button contact status:

1. Determine direction of the energy bar movement (Push Action or Release Action)
2. Read input status of all button contacts
3. Calculate data payload
4. Calculate security signature

In PTM 216B, the type of action (Press Action or Release Action) is indicated by Bit 0 (Energy Bar). If a button contact has been actuated during Press Action or Release Action, then this is indicated by the according status bit set to '1'.

Note that all contacts that were pressed during Press Action will be released during Release Action. The case of continuing to hold one (or several) button contacts during Release Action is mechanically not possible.

The button action encoding used by PTM 216B is shown Figure 15 in below.

Switch Status							
Reserved			B1	B0	A1	A0	ACTION TYPE
Bit 7	Bit 6	Bit 5	Bit 4	Bit 3	Bit 2	Bit 1	Bit 0
Shall be 0b000			0 = No Action 1 = Action	0 = No Action 1 = Action	0 = No Action 1 = Action	0 = No Action 1 = Action	0 = Release Action 1 = Press Action

Figure 15 - PTM 216B button action encoding

4.6.3 Commissioning telegram payload

The payload of commissioning telegrams is 30 bytes long and consists of the following fields:

- Length (1 byte)
  The Length field specifies the combined length of the following fields. For PTM 216B commissioning telegrams, this field is set to `0x1D` to indicate 29 byte of manufacturer-specific data.
  Note: In product versions prior to DC-06 this field was incorrectly set to `0x1E`.

- Type (1 byte)
  The Type field identifies the data type used for this telegram. This field is set to `0xFF` to indicate a "Manufacturer-specific Data" field

- Manufacturer ID (2 byte)
  The Manufacturer ID field is used to identify the manufacturer of BLE devices based on assigned numbers. By default, this field is set to `0x03DA` (EnOcean GmbH). This field can be changed via the NFC configuration interface as described in chapter 6.7.7.

- Sequence Counter (4 byte)
  The Sequence Counter is a continuously incrementing counter used for security processing. It is initialized to 0 at the time of production and incremented for each telegram (data telegram or commissioning telegram) sent.

- Security Key (16 byte)
  Each PTM 216B device contains its own 16 byte device-unique random security key which is generated and programmed during manufacturing. It is transmitted during commissioning to enable the receiver to authenticate PTM 216B data telegrams and used as IRK for the case of resolvable private address mode

- Static Source Address (6 byte)
  The Static Source Address is used to uniquely identify each BLE device. It is transmitted as part of the BLE frame as described in chapter 4.4.1. Some devices (most notable all iOS-based products) however do not expose this address to their applications. This makes it impossible to use such applications to commission PTM 216B. The Static Source Address is therefore again transmitted as part of the payload.

Figure 16 below illustrates the commissioning telegram payload.

LEN	TYP	Manufacturer ID	Manufacturer-specific Data		
0x1D	0xFF	0x03DA	Sequence Counter (4 Byte)	Security Key (16 Byte)	Static Source Address (6 Byte)

Figure 16 – Commissioning telegram payload structure

4.7 PTM 216B data telegram authentication

PTM 216B implements telegram authentication for transmitted data telegrams to ensure that only telegrams from transmitters using a previously exchanged security key will be accepted by the receiver. Authentication relies on a 32 bit telegram signature which is calculated as shown in Figure 17 below and exchanged as part of the radio telegram.

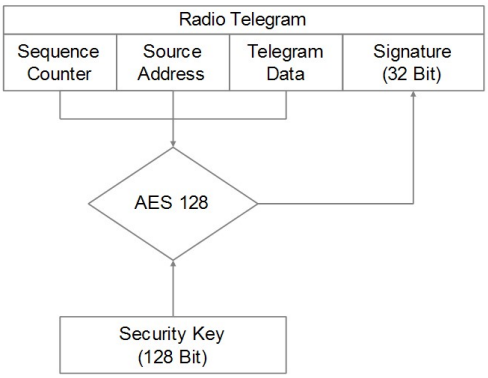

Figure 17 – Telegram authentication flow

Sequence counter, source address and the remaining telegram data together form the input data for the signature algorithm. This algorithm uses AES128 encryption based on the device-unique random security key to generate a 32 bit signature which will be transmitted as part of the radio telegram.

The signature is therefore dependent both on the current value of the sequence counter, the device source address and the telegram payload. Changing any of these three parameters will therefore result in a different signature.

The receiver performs the same signature calculation based on sequence counter, source address and the remaining telegram data of the received telegram using the security key it received from PTM 216B during commissioning.

The receiver then compares the signature reported as part of the telegram with the signature it has calculated. If these two signatures match, then the following statements are true:

- Transmitter (PTM 216B) and receiver use the same security key
- The message content (address, sequence counter, data) has not been modified

At this point, the receiver has validated that the message originates from a trusted transmitter (as identified by its security key) and that its content is valid.

In order to avoid message replay (capture and retransmission of a valid message), it is required that the receiver tracks the value of the sequence counter used by PTM 216B and only accepts messages with higher sequence counter values (i.e. not accepts equal or lower sequence counter values for subsequent telegrams).

4.7.1 Authentication implementation

PTM 216B implements data telegram authentication based on AES128 in CCM (Counter with CBC-MAC) mode as described in IETF RFC3610. At the time of writing, the RFC3610 standard could be found here: https://www.ietf.org/rfc/rfc3610.txt

The 13 Byte CCM Nonce (number used once – unique) initialization value is constructed as concatenation of 6 byte Source Address, 4 byte Sequence Counter and 3 bytes of value 0x00 (for padding).

Note that both Source Address and Sequence Counter use little endian format (least significant byte first).

Figure 18 below shows the structure of the AES128 Nonce.

AES128 Nonce (13 Byte)												
Source Address						Sequence Counter				Padding		
Byte 0	Byte 1	Byte 2	Byte 3	Byte 4	Byte 5	Byte 0	Byte 1	Byte 2	Byte 3	0x00	0x00	0x00

Figure 18 – AES128 Nonce structure

The AES128 Nonce and the 128 bit device-unique security key are then used to calculate a 32 bit signature of the authenticated telegram payload shown in Figure 19 below.

Authenticated Payload								
LEN	TYPE	MANUFACTURER	Sequence Counter				STATE	Optional Data
Byte 0	0xFF	0x03DA	Byte 0	Byte 1	Byte 2	Byte 3	Byte 0	0 / 1 / 2 / 4 byte

Figure 19 – Authenticated payload

The calculated 32 bit signature is then appended to the data telegram payload as shown in Figure 14 in chapter 4.6.

In addition to the RFC3610 standard itself, please consult also Appendix C for a step by step description of the authentication process.

5. Commissioning

Commissioning is the process by which PTM 216B is learned into a receiver (actuator, controller, gateway, etc.).

The following two tasks are required in this process:

- Device identification
  The receiver needs to know how to uniquely identify this specific PTM 216B device. This is achieved by using a unique 48 Bit ID (Source Address) for each PTM 216B device as described in chapter 4.4. In addition, up to 4 byte of Optional Data can be configured as described in chapter 6.7.8

- Security parameter exchange
  The receiver needs to be able to authenticate radio telegrams from PTM 216B in order to ensure that they originate from this specific device and have not been modified as described in chapter 4.6.3. This is achieved by exchanging a 128 Bit random security key used by PTM 216B to authenticate its radio telegrams.

PTM 216B provides the following options for these tasks:

- NFC-based commissioning
  The PTM 216B parameters are read by a suitable commissioning tool (e.g. NFC smartphone with suitable software) which is already part of the network into which PTM 216B will be commissioned. The commissioning tool then communicates these parameters to the intended receiver of PTM 216B radio telegrams. NFC-based commissioning is described in chapter 6

- Camera-based commissioning
  Each PTM 216B module contains an optically readable QR Code which identifies its ID and its security key. This QR code can be read by a by a suitable commissioning tool (e.g. smartphone) which is already part of the network into which PTM 216B will be commissioned. The commissioning tool then communicates these parameters to the intended receiver of PTM 216B radio telegrams.
  The QR code structure is described in chapter 7.2.

- Radio-based commissioning
  PTM 216B can communicate its parameters via special radio telegrams (commissioning telegrams) to the intended receiver. To do so, PTM 216B can be temporarily placed into radio-based commissioning mode as described in chapter 5.3

5.1 NFC-based commissioning

All required PTM 216B parameters can be read via a suitable NFC reader and writer supporting the ISO/IEC 14443 Part 2 and 3 standards. The actual NFC implementation in PTM 216B uses a Mifare Ultralight tag.

Commissioning via NFC should follow these steps:

1. Unlock PTM 216B using the default NFC PIN code `0x0000E215`

2. Read the PTM 216B Source Address, Security Key and Sequence Counter and configure the receiver accordingly

3. **Important**: The pre-programmed random security key used by PTM 216B can be obtained both from the product DMC code as described in chapter 5.2, from received commissioning telegrams as described in chapter 5.3 and via the NFC interface.
   For security-critical applications where unauthorized users could have physical access to the switch it is therefore strongly recommended to change the security key to a new security key as part of the NFC-based commissioning process. To do so, follow the procedure outlined in chapter 6.7.5.
   For additional security, NFC read-out of the new security key can be disabled by setting the `PRIVATE SECURITY KEY` flag in the `Configuration` register before setting the new security key.
   This ensures that even persons knowing the correct PIN code to configure this specific switch cannot read out the programmed new security key. Please verify that you have properly documented the new security key as there is no possibility to retrieve this after it has been written.

4. **Important**: It is strongly recommended to disable radio-based commissioning after programming a new security key. This ensures that the new security key cannot be read out by triggering a commissioning telegram as described in chapter 5.3.
   To disable radio-based commissioning, set the `DISABLE LRN TELEGRAM` flag in the `Configuration` register to `0b1`, see chapter 6.7.3.

5. **Important**: You should always change the NFC PIN code from its default setting to a new NFC PIN code and lock the NFC configuration interface. This step is mandatory to avoid access to the PTM 216B configuration using the default PIN code.
   Should you lose the new NFC PIN code then PTM 216B can be reset to factory mode (with the default NFC PIN code) by means of a factory reset as described in chapter 5.4. For security reasons, this factory reset will always reset the security key to its pre-programmed value.

5.2 Camera-based commissioning

Each PTM 216B module contains an optically readable Commissioning Code implemented either as Data Matrix Code or as QR Code depending on the device revision.

This Commissioning Code on the device label can be scanned by a suitable commissioning tool (e.g. smartphone or PC with DMC / QR code reader) to read the static source address and the security key of the device.

The commissioning tool can the use this information to configure the intended receiver of PTM 216B radio telegrams.

See chapter 7 for details of the commissioning code structure.

5.3 Radio-based commissioning

For cases where both NFC and camera-based commissioning are not feasible it is possible to set PTM 216B into a specific mode where it transmits commissioning telegrams.

This functionality can be disabled via the NFC configuration interface by setting the `DISABLE LRN TELEGRAM` flag in the `Configuration` register to `0b1` (see chapter 6.7.3).

Starting from product version DC-06, this functionality can also be disabled by means of a specific button press (long press of A0 + A1 + B1), see chapter 5.3.4.

5.3.1 Commissioning mode entry

Commissioning mode is entered using a special button contact sequence. This is illustrated in Figure 20 below.

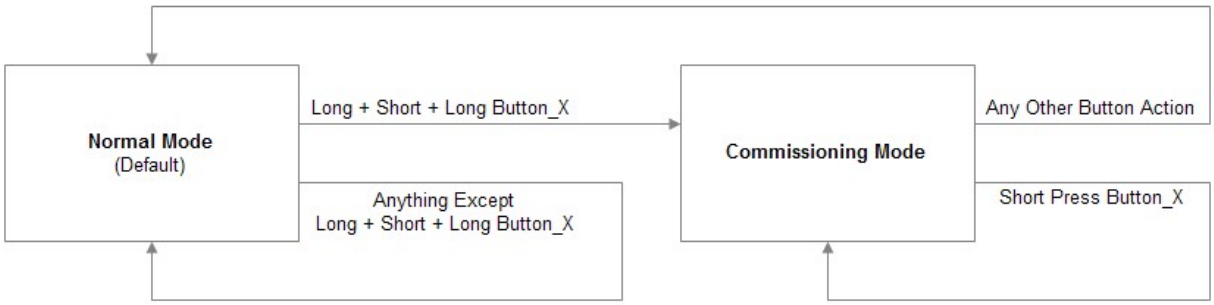

Figure 20 – Button sequence to enter radio-based commissioning mode

To enter commissioning mode, start by selecting one button contact of PTM 216B. Any button of PTM 216B (A0, A1, B0, B1) can be used. This button is referred to as `Button_X` in Figure 20 above.

Next, execute the following long-short-long sequence:

1. Press and hold the selected button together with the energy bar for more than 7 seconds before releasing it

2. Press the selected button together with the energy bar quickly (hold for less than 2 seconds)

3. Press and hold the selected button together with the energy bar again for more than 7 seconds before releasing it

Upon detection of this sequence, PTM 216B will enter commissioning mode if the `DISABLE LRN TELEGRAM` flag in the `Configuration` register of the NFC interface is not set (`0b0`, default state).

If the `DISABLE LRN TELEGRAM` flag in the `Configuration` register of the NFC interface is set (`0b1`, configured via NFC interface) then PTM 216B will not enter commissioning mode and transmit normal data telegrams according to the button status.

5.3.2 Commissioning telegram transmission

PTM 216B will transmit a commissioning telegram (on the radio channels selected as described in chapter 3.1) upon entering commissioning mode. The structure of the commissioning telegram is described in chapter 4.6.3.

PTM 216B will continue to transmit commissioning telegrams whenever the button used for entry into commissioning mode (`Button_X`) is pressed or released again.

5.3.3 Exit from commissioning mode

Pressing any key except the button used for entry into commissioning mode (`Button_X`) will cause PTM 216B to stop transmitting commissioning telegrams and return to normal data telegram transmission.

5.3.4 Disable commissioning mode

Starting with product version DC-06 it will be possible to disable commissioning mode in addition to using the NFC interface also by means of a specific button input.

To do so, press buttons A0, A1 and B1 together with the energy bar and hold them for at least 10 seconds before releasing them.

Commissioning mode can be re-enabled by means of a factory reset as described below.

5.4 Factory reset

PTM 216B can be reset to its default settings by means of a factory reset.

This ensures that PTM 216B can be reset to a known configuration in case the PIN for the NFC access has been lost or NFC access is not possible for other reasons

In order to execute such factory reset, the rocker(s) and the switch housing have to be removed from the PTM 216B module. Then, all four button contacts (A0, A1, B0 and B1) have to be pressed at the same time while the energy bow is pressed down.

The energy bow must then be held at the down position for at least 10 seconds before being released. The button contacts A0, A1, B0 and B1 can be released at any time after pressing the energy bow down, i.e. it is no requirement to hold them as well for at least 10 seconds.

Upon detecting this input, PTM 216B will restore the default settings of the following items:

- Static Source Address
- `Security Key` and `Security Key Write` register
  Both registers will be restored to the value of the factory-programmed security key
- Manufacturer ID
  The manufacturer ID will be reset to `0x03DA` (EnOcean GmbH)
- NFC PIN Code
  The NFC PIN Code will be reset to `0x0000E215`

After such factory reset, Source Address and Security Key will again match the content of the DMC code on the unit label as described in chapter 7.

In addition, PTM 216B will reset the following registers:

- `CONFIGURATION` register (to `0x00`)
- `VARIANT` register (to `0x00`)
- `MODE` register (to `0x00`)

6. NFC interface

PTM 216B implements NFC Forum Type 2 Tag functionality as specified in the ISO/IEC 14443 Part 2 and 3 standards using an NXP NT3H2111 Mifare Ultralight tag.

This NFC functionality can be used to access (read and write) the PTM 216B configuration memory and thereby configure the device as described in the following chapters.

Chapter 6.1 below gives an introduction to the NFC functionality and options to use the NFC interface.

For in-depth support for integrating the NXP NT3H2111 NFC functionality into PC or smartphone SW please contact NXP technical support.

6.1 Using the NFC interface

Using the NFC interface requires the following:

- NFC reader (either PC USB accessory or suitable smartphone / tablet)
- NFC SW with read, write, PIN lock, PIN unlock and PIN change functionality

EnOcean recommends TWN4 (order code T4BT-FB2BEL2-SIMPL) from Elatec RFID Systems (https://www.elatec-rfid.com/en/) as USB NFC reader. This reader is shown in Figure 21 below.

Figure 21 – Elatec TWN4 MultiTech Desktop NFC Reader

TWN4 can be configured as CDC / Virtual COM port and can then be accessed like any serial interface. It provides all necessary commands for the NFC interface, specifically to:

- Read data from configuration memory and write data to configuration memory
- Authenticate the user (to allow read / write of protected memory) via 32 bit PIN

NFC functionality is also available in certain Android smartphones and tablets. NXP provides a SW framework that can be used with Android devices and can advise regarding suitable tablets and smartphones.

NFC communication distance is for security reasons set to require direct contact between reader and switches based on PTM 216B.

6.2 NFC interface functions

For a detailed description about the NFC functionality, please refer to the ISO/IEC 14443 standard.

For specific implementation aspects related to the NXP implementation in NT3H2111, please refer to the NXP documentation which at the time of writing was available under this link:
https://www.nxp.com/docs/en/data-sheet/NT3H2111_2211.pdf

The following chapters summarize the different functions for reference purposes.

6.2.1 NFC interface state machine

Figure 22 below shows the overall state machine of the NFC interface.

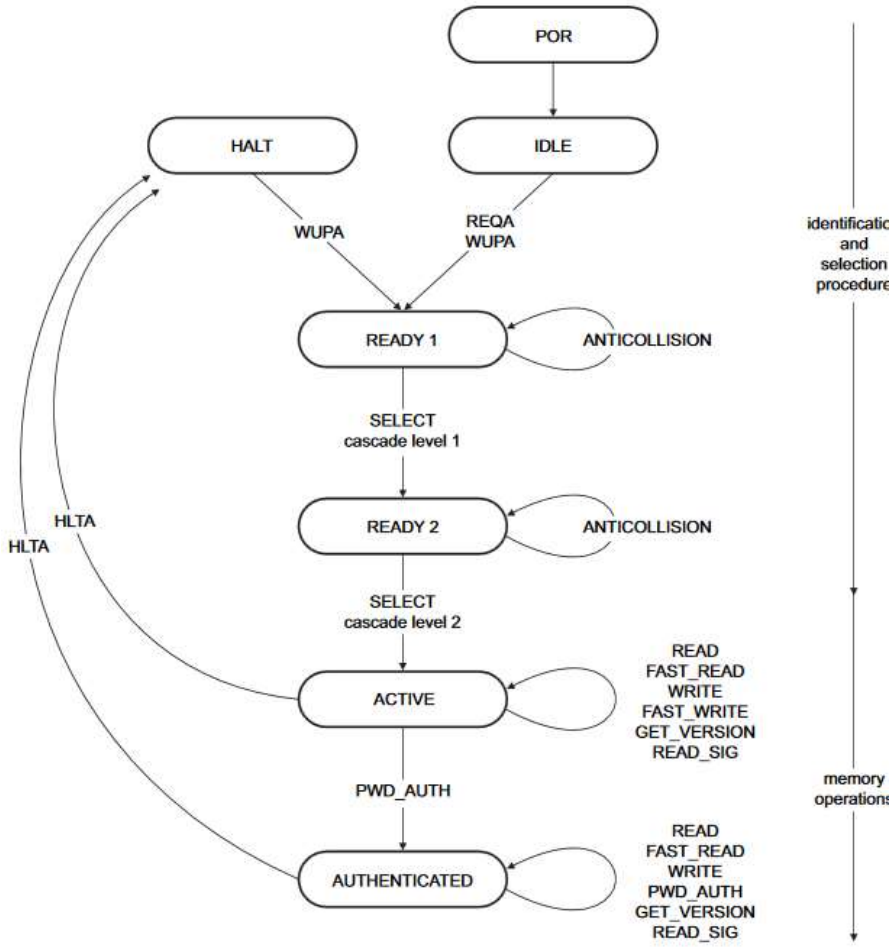

Figure 22 – NFC interface state machine

6.2.2 IDLE state

IDLE is the waiting state after a Power-On Reset (POR), i.e. after the NFC tag has been introduced into the magnetic field of the NFC reader.

The NFC tag exits the IDLE state towards the READY 1 state when either a REQA or a WUPA command is received from the NFC reader. REQA and WUPA commands are transmitted by the NFC reader to determine whether any cards are present within its working range.

Any other data received by the NFC tag while in IDLE state is discarded and the NFC tag will remain in IDLE state.

6.2.3 READY 1 state

READY 1 is the first UID resolving state where the NFC tag resolves the first 3 bytes of the 7 byte UID using the ANTICOLLISION or SELECT commands for cascade level 1.

READY 1 state is exited after the SELECT command from cascade level 1 with the matching complete first part of the UID has been executed. The NFC tag then proceeds into READY 2 state where the second part of the UID is resolved.

6.2.4 READY 2 state

READY 2 is the second UID resolving state where the NFC tag resolves the remaining 4 bytes of the 7 byte UID using the ANTICOLLISION or SELECT commands for cascade level 2.

READY 2 state is exited after the SELECT command from cascade level 2 with the matching complete part of the UID has been executed. The NFC tag then proceeds into ACTIVE state where the application-related commands can be executed.

6.2.5 ACTIVE state

ACTIVE state enables read and write accesses to unprotected memory.

If access to protected memory is required, then the tag can transition from the ACTIVE state to AUTHENTICATED state by executing the PWD_AUTH command in conjunction with the correct 32 bit password.

6.2.6 Read command

The READ command requires a start page address, and returns the 16 bytes of four NFC tag pages (where each page is 4 byte in size).

For example, if the specified address is `03h` then pages `03h`, `04h`, `05h`, `06h` are returned. Special conditions apply if the READ command address is near the end of the accessible memory area.

Figure 23 below shows the read command sequence.

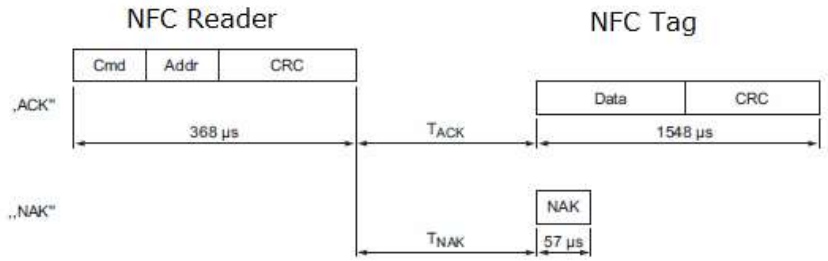

Figure 23 – NFC read command sequence

6.2.7 Write command

The WRITE command requires a start page address and returns writes 4 bytes of data into that page.

Figure 24 below shows the read command sequence.

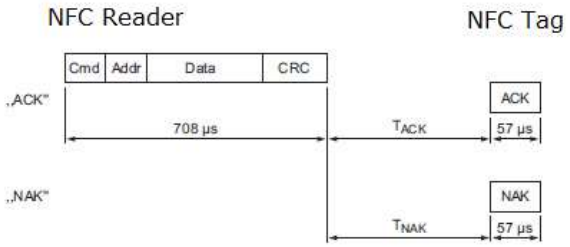

Figure 24 – NFC write command sequence

6.2.8 Password authentication (PWD_AUTH) command

The protected memory area can be accessed only after successful password verification via the PWD_AUTH command.

The PWD_AUTH command takes the password as parameter and, if successful, returns the password authentication acknowledge, PACK.

Figure 25 below shows the password authentication sequence.

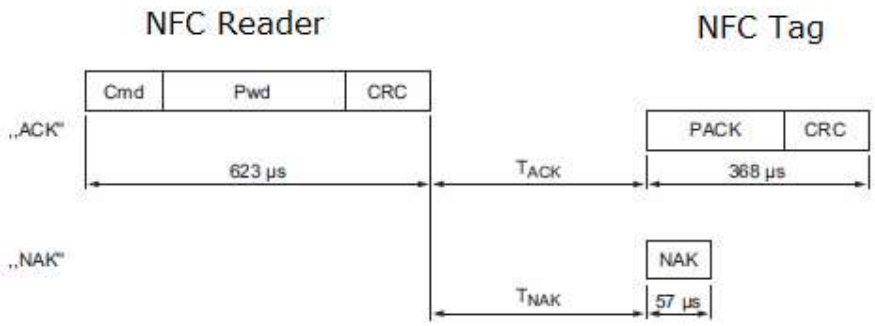

Figure 25 – Password authentication sequence

After successful authentication, the password can be changed by writing the new password to memory page `0xE5`.

Note that a read access to page `0xE5` always return `0x00000000`, i.e. it is not possible to read out the current PIN code.

6.3 Using TWN4 as USB NFC reader

Elatec RFID Systems provides a PC software called "Director" as part of their software support package. At the time of writing, this was available from this address:
https://www.elatec-rfid.com/en/download-center/contact-form-twn4-devpack-sdk/

Figure 26 below shows the user interface of this software.

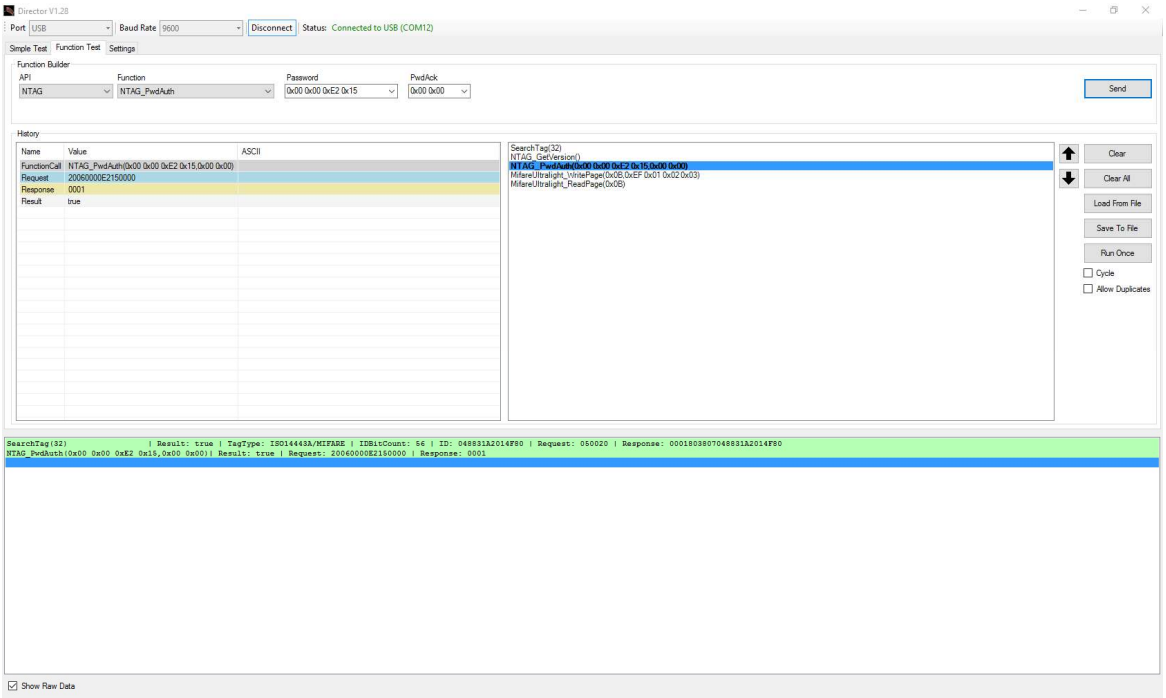

Figure 26 – User interface of TWN4 Director

By using this software, it is easily possible to generate the required serial commands that have to be sent via CDC / Virtual COM port to TWN4 and understand the structure of the response that will be received back.

6.3.1 Useful commands

The following commands are especially useful:

- `SearchTag(maximum ID bytes)`
  Used to search for a connected tag and identify type and ID of such tag. This should always be used as first operation ahead of any read / write / authenticate actions.
  Example: `SearchTag(32)`

- `NTAG_PwdAuth(32 bit password as hex bytes, 16 bit password_ack as hex bytes)`
  Used to authenticate access to the protected memory area
  Example: `NTAG_PwdAuth(0x00 0x00 0xE2 0x15, 0x00 0x00)`

- `NTAG_Read(page)`
  Used to read one page of data
  Example: `NTAG_Read(0x04)`

- `NTAG_Write(page, data)`
  Used to write one page of data
  Example: `NTAG_Write(0x40, 0x12 0x34 0x56 0x78)`

- `NTAG_Write(0xE5, PIN Code)`
  Used to set a new pin code by writing to page `0xE5`
  Example: `NTAG_Write(0xE5, 0x12 0x34 0x56 0x78)`

6.3.2 Translation into binary data

In order to use these commands within a user application, they have to be translated into raw data. This can be done by enabling the "Show Raw Data" feature in the command log of the Director software as shown in Figure 27 below.

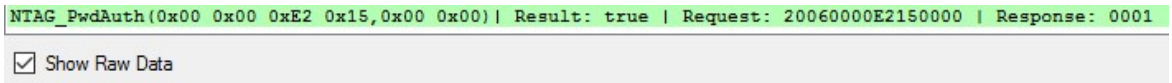

Figure 27 – Enabling raw data display

This raw data can then be transmitted to TWN4 via a virtual COM port. TWN4 will respond to the request with the corresponding response as shown in Figure 28 below.

Figure 28 – Binary data exchange

6.4 Configuration memory organization

The PTM 216B configuration memory is divided into the following areas:

- Public data
- Protected data

In addition to that, PTM 216B maintains a private configuration memory region used to store default parameters and confidential information which is not accessible to the user.

Figure 29 below shows the configuration memory structure used by PTM 216B.

Public Data (Read Only)	
PRODUCT NAME („PTM 216B “)	
PRODUCT ID („0B0005 “)	
NFC REVISION (01:00)	MANUFACTURER ID (01:00)
HW VERSION („DA-01")	
SW VERSION (01:00:00:00)	
SOURCE ADDRESS	
SEQUENCE COUNTER	

Protected Data (Read / Write with PIN)
CONFIGURATION
OPTIONAL DATA
PRODUCT ID WRITE
SOURCE ID WRITE
MANUFACTURER ID WRITE
SECURITY KEY1
RADIO CHANNEL CONFIG
BUTTON COMMAND MAP
SECURITY KEY2
CUSTOMER NFC DATA

Private Data (No Access)
SECURITY KEYS
DEFAULT SETTINGS

Figure 29 – Configuration memory structure

6.5 NFC memory address map

The NFC-accessible configuration memory is organized in memory pages where each memory page is 4 byte wide. An NFC access reads 16 bytes (4 pages) or writes 4 bytes (one page).

The addresses map of the configuration memory is shown in Table 2 below. The byte order is little endian, i.e. byte 0 will be read first and byte 3 last.

PAGE	MEMORY AREA	BYTE OFFSET				ACCESS TYPE
		0	1	2	3	
00	NFC_SETTINGS	RESERVED				READ ONLY
01						
02						
03						
04	DEVICE_IDENTIFICATION	DEVICE_NAME ("PTM216B ")				
05						
06		OEM_NAME ("EnOcean®")				
07						
08		NFC_REVISION		MANUFACTURER_ID		
09		RFU				
0A		HW_REVISION				
0B		SW_REVISION				
0C		SOURCE_ADDRESS				
0D		SEQUENCE_COUNTER				
0E	BLE_DEVICE_CONFIG	CONFIGURATION	VARIANT	MODE	RFU	READ / WRITE PIN PROTECTED
0F		OPTIONAL_DATA_0	OPTIONAL_DATA_1	OPTIONAL_DATA_2	OPTIONAL_DATA_3	
10		OEM_NAME_WRITE				
11						
12		UPDATE_SOURCE_ADDRESS				
13		MANUFACTURER_ID_WRITE		RFU		
14		SECURITY_KEY1				
15						
16						
17						
18		CH_REG1	CH_REG2	CH_REG3	RFU	
19	RFU	RFU				
1A						
1B						
1C	BLE_BUTTON_CMD_MAP	BLE_ECO_PRESS_CMD	BLE_ECO_RELEASE_CMD	BLE_A0_PRESS_CMD	BLE_A0_RELEASE_CMD	
1D		BLE_A1_PRESS_CMD	BLE_A1_RELEASE_CMD	BLE_B0_PRESS_CMD	BLE_B0_RELEASE_CMD	
1E		BLE_B1_PRESS_CMD	BLE_B1_RELEASE_CMD	BLE_A0_A1_PRESS_CMD	BLE_A0_A1_RELEASE_CMD	
1F		BLE_A0_B0_PRESS_CMD	BLE_A0_B0_RELEASE_CMD	BLE_A0_B1_PRESS_CMD	BLE_A0_B1_RELEASE_CMD	
20		BLE_A1_B0_PRESS_CMD	BLE_A1_B0_RELEASE_CMD	BLE_A1_B1_PRESS_CMD	BLE_A1_B1_RELEASE_CMD	
21		BLE_B0_B1_PRESS_CMD	BLE_B0_B1_RELEASE_CMD	BLE_A0_A1_B0_PRESS_CMD	BLE_A0_A1_B0_RELEASE_CMD	
22		BLE_A0_A1_B1_PRESS_CMD	BLE_A0_A1_B1_RELEASE_CMD	BLE_A0_B0_B1_PRESS_CMD	BLE_A0_B0_B1_RELEASE_CMD	
23		BLE_A1_B0_B1_PRESS_CMD	BLE_A1_B0_B1_RELEASE_CMD	BLE_A0_A1_B0_B1_PRESS_CMD	BLE_A0_A1_B0_B1_RELEASE_CMD	
24	SECUIRTY_KEY2	SECURITY_KEY2				
25						
26						
27						
28	RFU	RFU				
29						
2A						
2B						
2C						
2D						
2E						
2F						
30	CUSTOMER_DATA	CUSTOMER_NFC_DATA				
...						
...						
6F						

Table 2 – Configuration memory address map

6.6 Public data

Public data can be read by any NFC-capable device supporting the ISO/IEC 14443 Part 2 and 3 standards. No specific security measures are used to restrict read access to this data.

The following items are located in the public data area:

- Product Name
  This is always "PTM216B"
- OEM Name
  This is an 8 byte field which is by default set to "EnOcean®" to identify EnOcean GmbH as the manufacturer of this module. OEM Name and Manufacturer ID can be configured by the customer as required to identify his PTM 216B based product, see chapter 6.7.7
- Manufacturer ID
  This is a 2-byte field Manufacturer ID is assigned by Bluetooth SIG and used to identify the manufacturer of a Bluetooth product, see chapter 4.6. This field is by default set to 0x03DA (EnOcean GmbH).
  Product ID and Manufacturer ID can be configured by the customer as required to identify his PTM 216B based product, see chapter 6.7.7
- Static Source Address
  This is a 4-byte field containing the four least significant bytes (the two most significant bytes are always 0xE215) of the static source address used by PTM 216B, see chapter 4.4.1. Each PTM 216B is pre-programmed with an individual static source address.
  The Static Source Address can be configured by the customer as required to identify his PTM 216B based product, see chapter 6.7.4
- Hardware Revision, Software Revision and NFC Revision
  These fields identify the device revision
- Telegram sequence counter
  This is a 4-byte field which is initialized to zero during manufacturing and incremented for each transmitted telegram. Receivers shall never accept telegrams containing sequence counter values equal or less than previously received values to avoid replay attacks.

Changing the Static Source Address, Manufacturer ID and Product ID fields is only possible via protected data access as described below to prevent unauthorized modification.

For security reasons, the telegram sequence counter cannot be written or reset by any mechanism.

6.7 Protected data

The following items are located in the protected data area:

- `SOURCE_ADDRESS_WRITE` register
  This 4-byte register is used to update the lower 4 byte of the Static Source Address, see chapter 6.7.4

- `OEM_NAME_WRITE` register
  This 8-byte register is used to update the Product ID, see chapter 6.7.7

- `MANUFACTURER_ID_WRITE` register
  This 4-byte register is used to update the Manufacturer ID, see chapter 6.7.7

- `SECURITY_KEY_WRITE` register
  This 16-byte register is used to update the security key used by PTM 216B, see chapter 6.7.5

- `OPTIONAL_DATA` register
  This 4-byte register contains optional data that can be transmitted as part of all data telegrams, see chapter 4.6. `OPTIONAL_DATA_0` is sent first, `OPTIONAL_DATA_3` last.

- `CONFIGURATION` register
  This 1-byte register is used to configure the functional behavior of PTM 216B, see chapter 6.7.3

- `VARIANT` register
  This 1-byte register is used to configure the transmission behavior of PTM 216B, see chapter 6.7.9

- `MODE` register
  This 1-byte register is used to configure the transmission behavior of PTM 216B, see chapter 6.7.9

- Custom Radio Channel registers (`CH_REG1`, `CH_REG2` and `CH_REG3`)
  These 1-byte registers are used to configure the radio channels in custom transmission mode of PTM 216B, see chapter 6.7.10

- `CUSTOM_NFC_DATA`
  PTM 216B reserves 64 byte for customer-specific NFC data, see chapter 6.7.11

6.7.1 PIN code

Protected data access is only possible after unlocking the configuration memory with the correct 32 bit PIN code. By default, the protected area is locked and the default pin code for unlocking access is `0x0000E215`.

The default pin code shall be changed to a user-defined value as part of the installation process. This can be done by unlocking the NFC interface with the old PIN code and then writing the new PIN code to page `0xE5` as described in chapter 6.3.1.

6.7.2 Configuration of product parameters

PTM 216B allows no direct modification of the following parameters:

- Static Source Address
- OEM Name
- Manufacturer ID
- Security Key

In order to modify these parameters, the user has to write the new value into specific registers (`SOURCE_ADDRESS_WRITE`, `OEM_NAME_WRITE`, `MANUFACTURER_ID_WRITE`, `SECURITY_KEY_WRITE`) in the protected data area and set the according `UPDATE` flag in the `CONFIGURATION` register.

After that, the user has to push and release the energy bar of the PTM 216B module.

6.7.3 CONFIGURATION register

The `CONFIGURATION` register is 1 byte wide and contains configuration flags. Figure 30 below shows the structure of the `Configuration` register.

CONFIGURATION							
Bit 7	Bit 6	Bit 5	Bit 4	Bit 3	Bit 2	Bit 1	Bit 0
OPTIONAL DATA SIZE		DISABLE LRN TELEGRAM	RPA ADDRESS MODE	PRIVATE SECURITY KEY	UPDATE SECURITY KEY	UPDATE MAN ID	UPDATE SOURCE ID

Figure 30 – Configuration register structure

The `Configuration` register is used to select the length of optional data, to disable the transmission of commissioning telegrams, to select resolvable private address mode, to disable NFC read-out of the security key and to indicate an update of the security key, the manufacturer ID or the source ID.

6.7.4 SOURCE_ADDRESS_WRITE register

The `SOURCE_ADDRESS_WRITE` register is 4 byte wide and can be used to modify the lower 32 bit of the PTM 216B Static Source Address. The upper 16 bit of the PTM 216B Static Source Address are always fixed to `0xE215` to identify the device type. In order to do change the lower 32 bit of the Static Source Address, follow these steps:

1. Write new source address into the `SOURCE_ADDRESS_WRITE` register
2. Set the `UPDATE SOURCE ID` flag in the `CONFIGURATION` register to `0b1`
3. Actuate (press and release) the energy bar of PTM 216B

PTM 216B will determine that it should modify the Static Source Address based on the setting of the `UPDATE_SOURCE_ID` flag and copy the value of the `SOURCE_ADDRESS_WRITE` register to the lower 32 bit of the `Source Address` register. After successful execution, PTM 216B will clear the `UPDATE_SOURCE_ID` flag to `0b0`.

6.7.5 SECURITY_KEY1 register

The `SECURITY_KEY1` register is 16 byte wide and allows to change the device-unique random security key. The factory programmed key can be replaced with a user defined key by following these steps:

1. Write new security key into the `SECURITY_KEY1` register
   Note that for security reasons, setting the Security Key to the following values is not possible:
   - `0x00000000000000000000000000000000`
   - `0xFFFFFFFFFFFFFFFFFFFFFFFFFFFFFFFF`

   If the `Security Key Write` register is set to one of these values then no update of the Security Key will occur.
2. Set the `UPDATE_SECURITY_KEY1` flag in the `CONFIGURATION` register to `0b1`
3. If the key should be write-only (not readable after the key update) then set the `PRIVATE_SECURITY_KEY1` flag in the `CONFIGURATION` register to `0b1`
4. Actuate (press and release) the energy bar of PTM 216B

PTM 216B will determine that it should modify `SECURITY_KEY1` based on the setting of the `UPDATE_SECURITY_KEY1` flag and copy the value of the `SECURITY_KEY1` register to the `SECURITY_KEY1` register in private memory. After successful execution, PTM 216B will clear the `UPDATE_SECURITY_KEY1` flag to `0b0`.

Note that it is not possible to read the currently used security key via NFC if the `UPDATE_SECURITY_KEY1` register has been overwritten or cleared via NFC write. In this case it is necessary to write a new security key (as described above) or to reset the device to its default security key by means of a factory reset.

6.7.6 Private Security Key mode

PTM 216B provides a private security key mode for applications requiring high security.

In this mode, it is possible to write a security key which subsequently is inaccessible via NFC and will not show up in commissioning telegram. In both cases, the security key will be set to all zeros. The written security key thereby is completely inaccessible externally.

To use private security key mode, set the `PRIVATE_SECURITY_KEY1` flag in the `Configuration` register is to `0b1`, the `UPDATE_SECURITY_KEY1` register to the desired security key and the `UPDATE_SECURITY_KEY1` flag in the `CONFIGURATION` register is to `0b1 and` pushing the energy bar.

The `PRIVATE_SECURITY_KEY1` register will be cleared to `0x00000000000000000000000000000000` after successful execution and the written security key will not be NFC readable (even for users having the correct PIN code). If commissioning telegrams are enabled, then the security key will be set to `0x00000000000000000000000000000000` there as well.

It is possible to return to Public (NFC-accessible) key mode by clearing the `PRIVATE_SECURITY_KEY` flag in the `CONFIGURATION` register, setting the `UPDATE_SECURITY_KEY1` register to the desired security key and the `UPDATE_SECURITY_KEY` flag in the `CONFIGURATION` register is to `0b1` and pushing the energy bar.

6.7.7 OEM_NAME_WRITE and MANUFACTURER_ID_WRITE register

The `OEM_NAME` register is 8 byte wide and is used to identify the OEM or a publicly-accessible parameter (e.g. a user-specific ID or name) that can be read by an NFC commissioning tool in order to determine the specific product implementation. The default OEM_NAME is "EnOcean®".

The MANUFACTURER_ID field holds the 2 byte manufacturer ID assigned by Bluetooth SIG. It specifies the manufacturer of a BLE product and is transmitted as part of each BLE telegram. By default, the Manufacturer ID is set to `0x03DA` (assigned to EnOcean GmbH). It can be changed to a different OEM identifier.

`OEM_NAME` and `MANUFACTURER_ID` can be changed by following these steps:

1. Write the desired `OEM_NAME` (8 byte using HEX or ASCII encoding according to user choice) into the `OEM_NAME_WRITE` register. Setting the `OEM_NAME_WRITE` register to `0x0000000000000000` will cause PTM 216B not to update OEM_NAME.

2. Write the desired `MANUFACTURER_ID` (2 byte) into the `MANUFACTURER_ID_WRITE` register. Setting the `MANUFACTURER_ID_WRITE` register to `0x0000` will cause PTM 216B not to update `MANUFACTURER_ID`.

3. Set the `UPDATE_OEM_MAN_ID` flag in the `CONFIGURATION` register to `0b1`

4. Actuate (press and release) the energy bar of PTM 216B

PTM 216B will determine that it should update OEM_NAME and MANUFACTURER_ID based on the setting of the UPDATE_OEM_MAN_ID flag and copy any non-zero value of the OEM_NAME_WRITE register to the OEM_NAME register and any non-zero value of the MANUFACTURER_ID_WRITE register to the MANUFACTURER_ID register.

After that, PTM 216B will clear the UPDATE_OEM_MAN_ID flag to 0b0.

6.7.8 OPTIONAL_DATA register

The OPTIONAL_DATA register can be used to specify up to 4 byte of custom data that will be transmitted as part of each data telegram. This optional data can store user-specific or application-specific information.

The size of the OPTIONAL DATA field is specified by the OPTIONAL_DATA_SIZE field in the Configuration register. The following settings of OPTIONAL_DATA_SIZE are supported:

- 0b00: 0 byte (No optional data, default)
- 0b01: 1 byte
- 0b10: 2 byte
- 0b11: 4 byte

If the size of the OPTIONAL_DATA_SIZE field is set to a non-zero value in the Configuration register then PTM 216B will read the corresponding amount of data from the OPTIONAL_DATA register beginning with the least significant byte (byte 0 – OPTIONAL_DATA_0).

Note that using the optional data feature requires additional energy for the radio telegram transmission and might therefore reduce the total number of redundant telegrams which are transmitted.

6.7.9 VARIANT register

The VARIANT register is 1-byte wide and allows selection of the custom radio transmission modes as described in chapter 3.3. Additionally, it allows reducing the transmission interval from 20 ms to 10 ms and to increase the bit rate from 1 Mbit to 2 Mbit. The structure of the VARIANT register is shown Figure 31 below.

VARIANT							
Bit 7	Bit 6	Bit 5	Bit 4	Bit 3	Bit 2	Bit 1	Bit 0
RFU			DATA_RATE	INTERVAL	TRANSMISSION_MODE		

Figure 31 – VARIANT register structure

6.7.9.1 TRANSMISSION_MODE selection

Table 3 below shows the supported custom radio transmission modes that can be selected using Bit [2:0] of the VARIANT register.

Setting	Meaning
0b000	Commissioning and data telegrams in standard Advertising Mode (Default configuration)
0b001	Commissioning telegrams in standard Advertising Mode Data telegrams on 3 user-defined radio channels
0b010	Commissioning telegrams in standard Advertising Mode Data telegrams on 2 user-defined radio channels
0b011	Commissioning telegrams in standard Advertising Mode Data telegrams on 1 user-defined radio channel
0b100	Commissioning and Data telegrams on 3 user-defined radio channels
0b101	Commissioning and Data telegrams on 2 user-defined radio channels
0b110	Commissioning and Data telegrams on 1 user-defined radio channel
0b111	RFU (Do not use)

Table 3 – Transmission Mode settings

6.7.9.2 Interval selection

The INTERVAL field allows reducing the transmission interval from the default setting of 20 ms to 10 ms.

INTERVAL	Behavior
0b0	20 ms Interval (Default configuration)
0b1	10 ms Interval

Table 4 – INTERVAL settings

6.7.9.3 Data rate selection

It is possible to increase the data rate from the default setting of 1 Mbit (standard BLE) to 2 Mbit proprietary mode using the DATA_RATE field.

Setting	Result
0b0	1 Mbit Data Rate (Default configuration)
0b1	2 Mbit Data Rate (Proprietary)

Table 5 – Data Rate settings

6.7.10 Radio channel selection registers

If the `TRANSMISSION_MODE` field of the `Variant` register is set to a value other than `0x00` then the radio channels for transmission are selected using the registers `CH_REG1`, `CH_REG2` and `CH_REG3` as described in chapter 3.3.

The `CH_REG1`, `CH_REG2` and `CH_REG3` registers are 1 byte wide and use the encoding shown in Table 6 below.

Note that two radio channel types are supported by PTM 216B:

- Standard BLE radio channels
  BLE Channel 0 … BLE Channel 39 use the even frequencies from 2402 MHz to 2480
- Custom radio channels in between the standard BLE channels
  Custom Channel 40 … 78 use the odd frequencies from 2403 MHz to 2479 MHz

TX_CHANNELn	Frequency	Channel Type
BLE Radio Channels		
37	2402 MHz	BLE Advertising Channel
0	2404 MHz	BLE Data Channel
1	2406 MHz	BLE Data Channel
…		
10	2424 MHz	BLE Data Channel
38	2426 MHz	BLE Advertising Channel
11	2428 MHz	BLE Data Channel
12	2430 MHz	BLE Data Channel
…		
36	2478 MHz	BLE Data Channel
39	2480 MHz	BLE Advertising Channel
Custom Radio Channels		
40	2403 MHz	Custom Radio Channel
41	2405 MHz	Custom Radio Channel
…		
77	2477 MHz	Custom Radio Channel
78	2479 MHz	Custom Radio Channel

Table 6 – Radio Channel Selection register settings

6.7.11 Customer Data

PTM 216B allocates 64 pages (256 byte) for customer data that can be read and written via the NFC interface in protected mode.

The main intention is to enable storing OEM-specific information such as product type, revision, date code or similar. There is however no restriction (other than the maximum size of 256 byte) on the type of content that can be stored in this memory region.

PTM 216B will not access or modify this memory region.

Users should keep in mind that the content of this memory region will not be affected by a factory reset. This means that after a factory reset, the content of this memory region can be read using the default PIN code. This region should therefore not be used to store sensitive data.

6.8 Private data

The private data area stores the following items:

- Security Key
- Default settings

The content of the private data area is not externally accessible.

6.8.1 Security key

The `Security Key` field contains the 128 bit private key used for authenticating PTM 216B telegrams and for resolving private source addresses.

This register is programmed with a random value during manufacturing. It can be changed using the `Security Key Write` feature described in chapter 6.7.5.

6.8.2 Default settings

The Default Settings field contains a backup of the following PTM 216B factory settings:

- Static Source Address
- Security Key
- Manufacturer ID
- NFC PIN Code

These default settings can be restored by means of a factory reset as described in chapter 5.4.

7. PTM 216B device label

Each PTM 216B module contains a device label.

Note that the finished switches (EWSSB, EWSDB, ESRPB and EDRPB) use a different product label as described in their user manuals and the information given in the subsequent chapters applies only to the PTM 216B module itself.

7.1 PTM 216B device label structure

Figure 32 below shows the structure of the PTM 216B device label. It identifies key parameters such as the source address (in this case E21501500100) and the manufacturing date (in this case week 30, 2018) in writing. Additionally, it contains a QR code for camera-based commissioning as discussed in chapter 5.2.

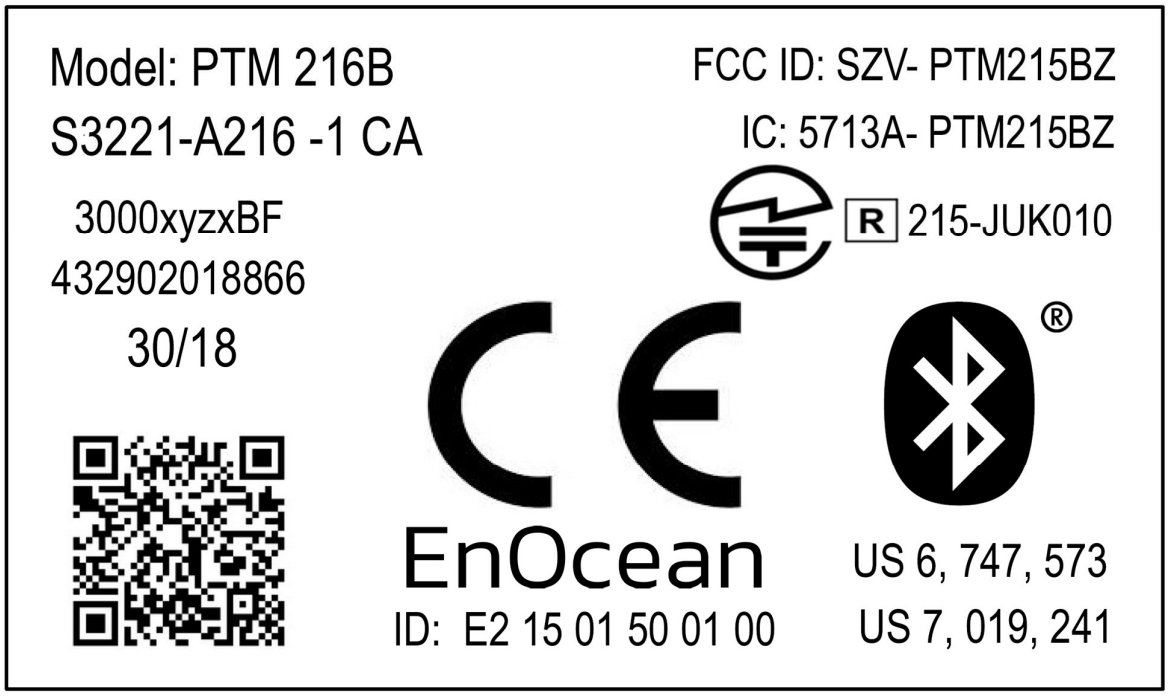

Figure 32 – PTM 216B device label structure

7.2 QR code format

The QR code used in the PTM 216B product label encodes key product parameter according to the ANSI/MH10.8.2-2013 industry standard. The QR code shown in Figure 32 above encodes the following string:

```
30SE21501500100+Z0123456789ABCDEF0123456789ABCDEF+30PS3221-A216+2PDC06+S01234567890123
```

Table 7 below describes the ANSI/MH10.8.2 data identifiers used by the PTM 216B device label and shows the interpretation of the data therein.

Identifier	Length	Content	Value in this example
30S	12 char	Static Source Address	E21501500100
Z	32 char	Security Key	0123456789ABCDEF0123456789ABCDEF
30P	10 char	Ordering Code	S3221-A216
2P	4 char	Step Code - Revision	DA01
S	14 char	Serial Number	01234567890123

Table 7 – QR code format

8. Device integration

PTM 216B is designed for integration into button or rocker-based switches. It implements the established PTM 2xx mechanical form factor and can therefore be used with a wide variety of existing designs.

8.1 Mechanical interface characteristics

Energy bow travel / operating force	1.8 mm / typ. 9 N At room temperature Only one of the two energy bows may be actuated at the same time!
Restoring force at energy bow	typ. 0.7 N Minimum restoring force of 0.5 N is required for correct operation
Number of operations at 25°C	typ. 100.000 actuations tested according to VDE 0632 / EN 60669
Cover material	Hostaform (POM)
Energy bow material	PBT (50% GV)

8.2 Mechanical interface drawings

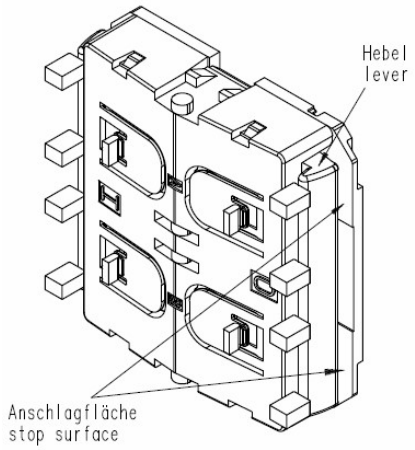

Figure 33 – PTM 216B, tilted view (including rocker catwalks)

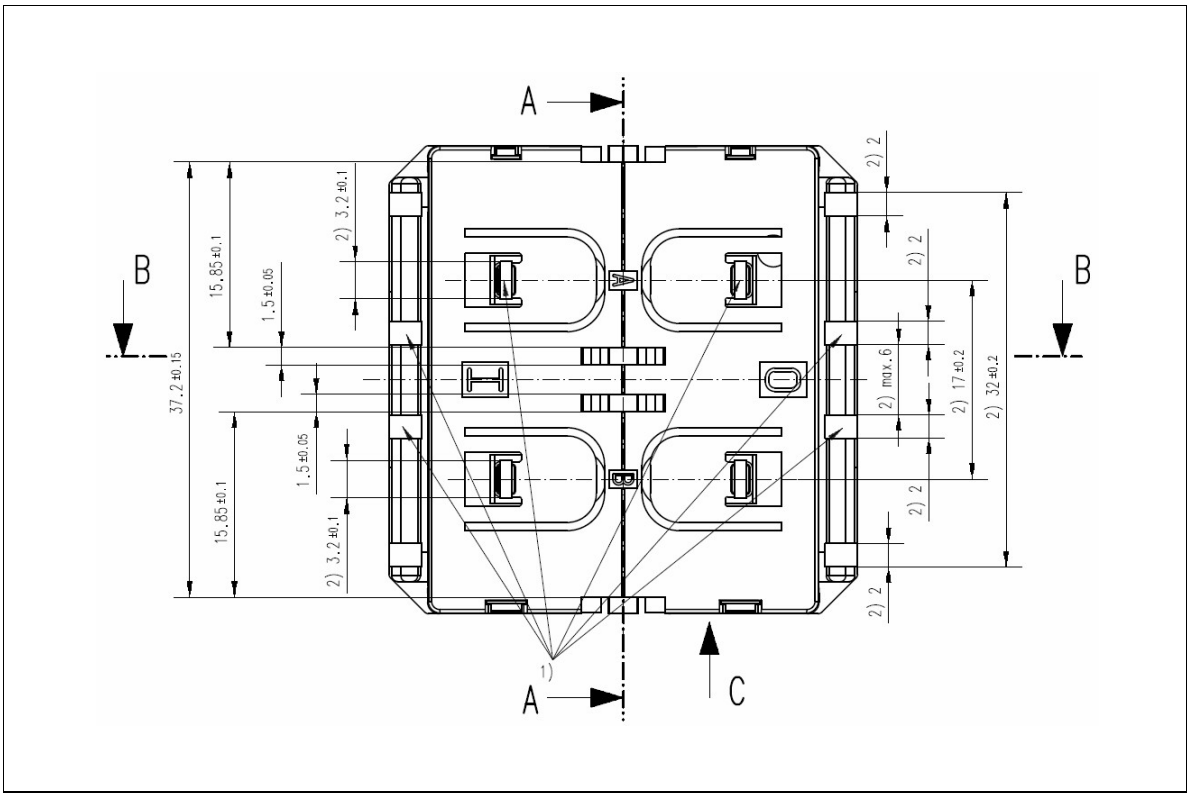

1) these catwalks are not needed when using one single rocker only 2) dimensions of rocker part

Figure 34 – PTM 216B, top view (note cut A, B and C marking)

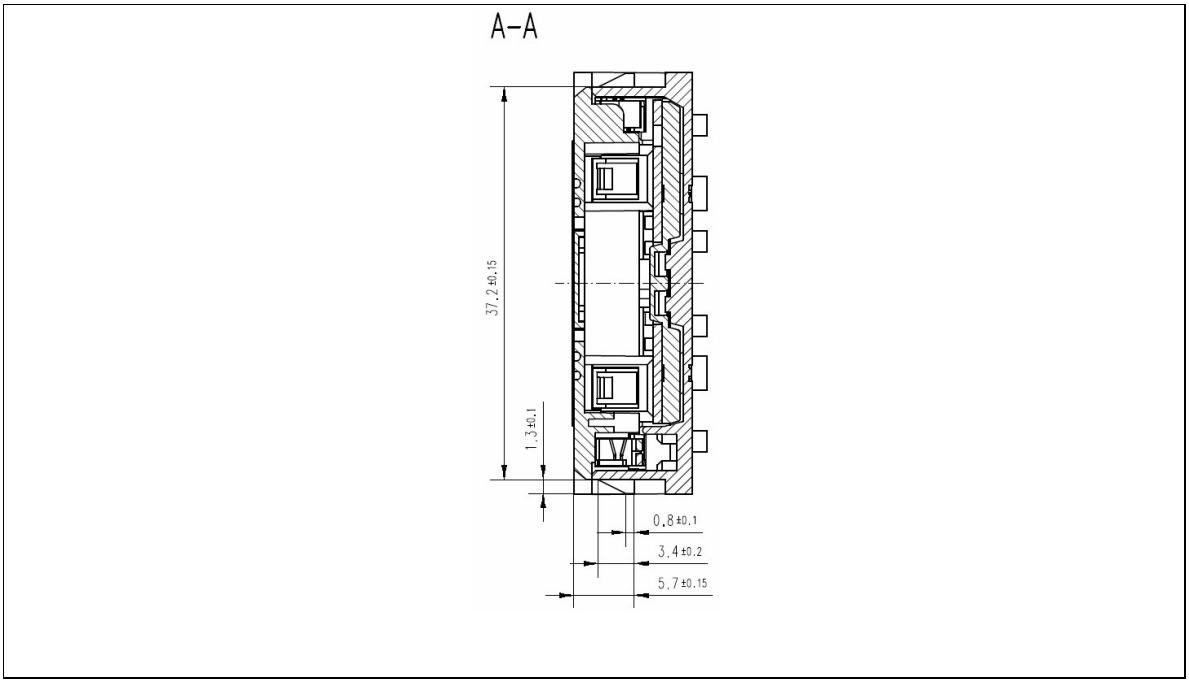

Figure 35 – PTM 216B, cut A

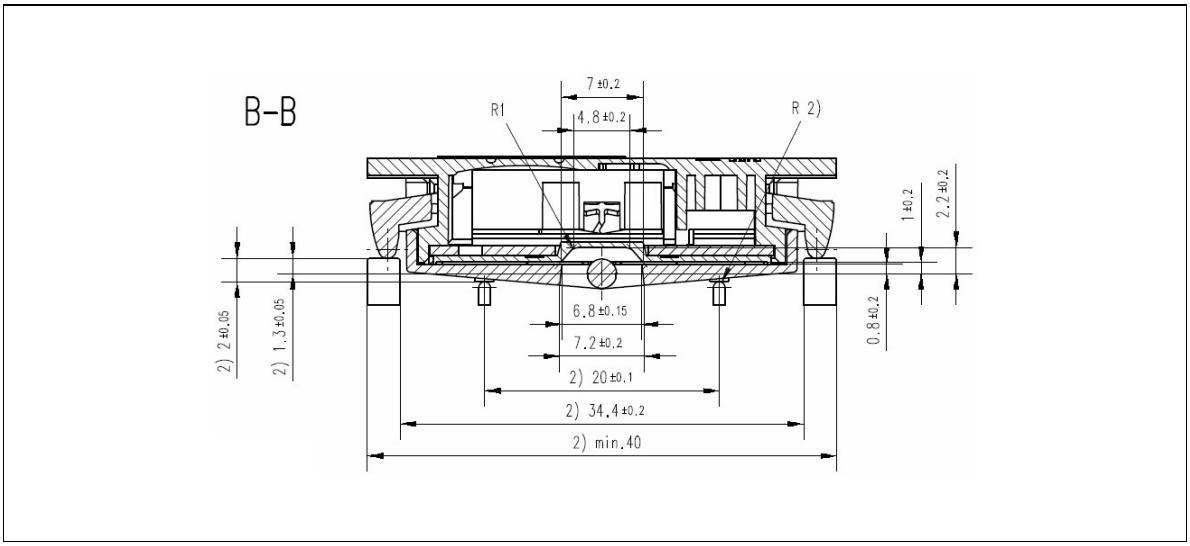

2) dimensions of rocker part

Figure 36 – PTM 216B, cut B and C

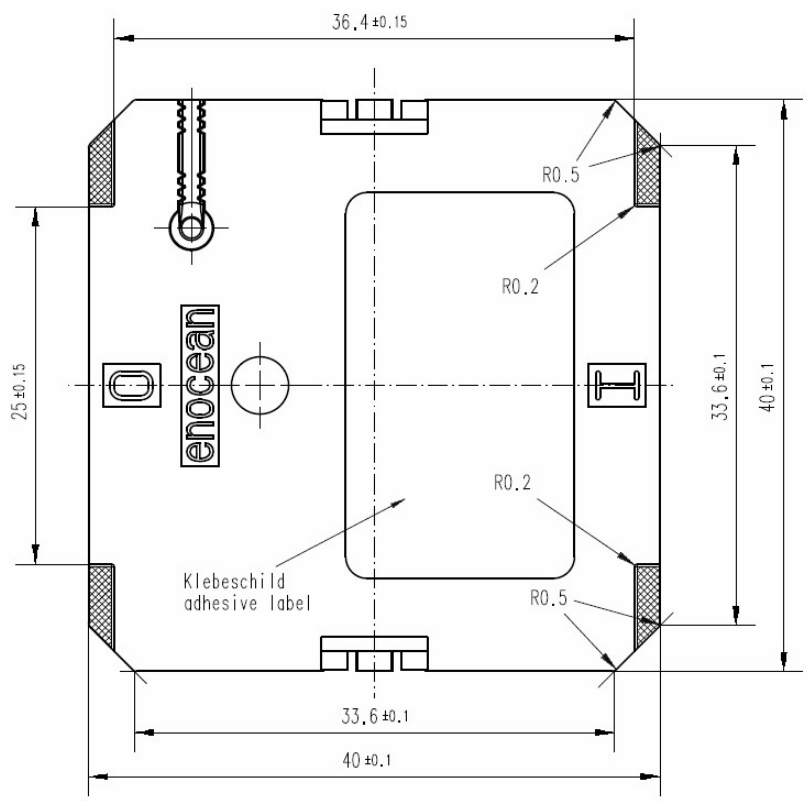

Hatched areas: support planes

Figure 37 – PTM 216B rear view

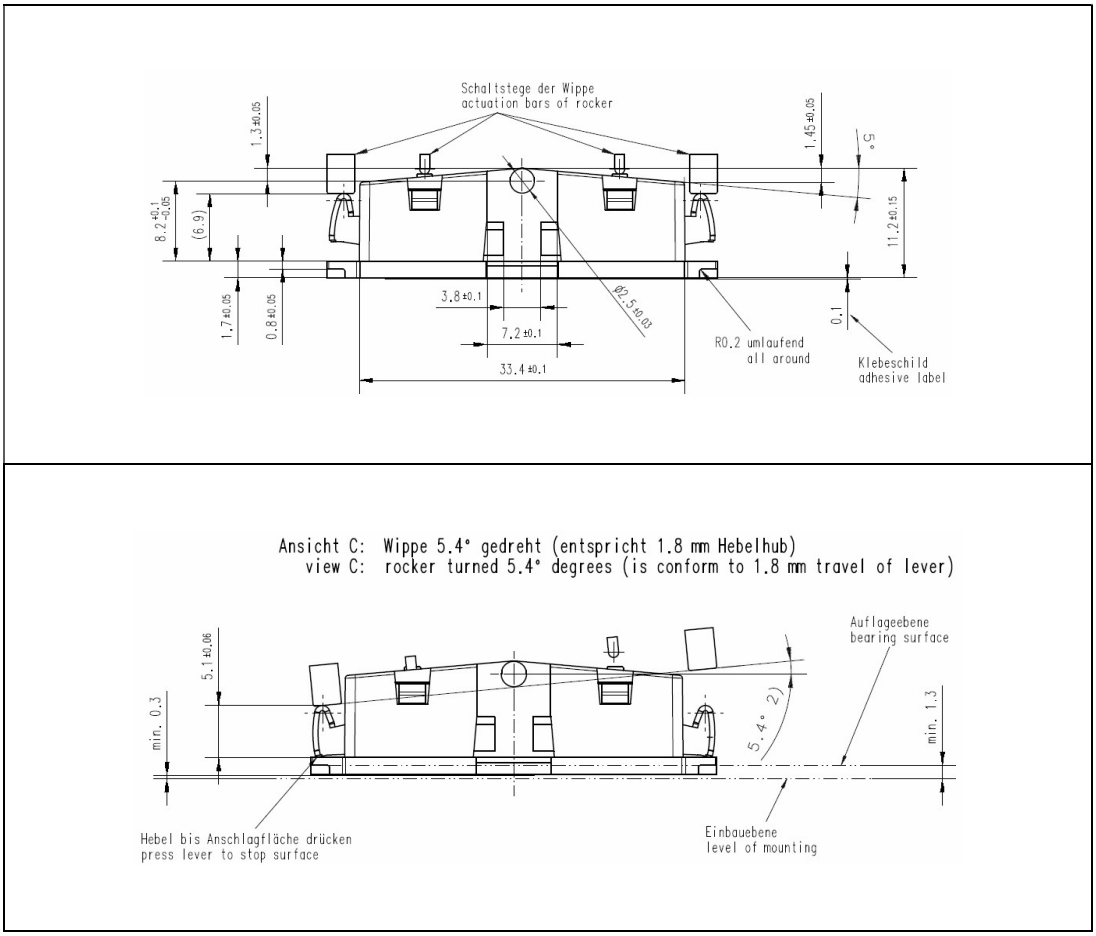

2) dimensions of rocker part

Figure 38 – PTM 216B, side view

If the rocker is not mounted on the rotation axis of PTM 216B several tolerances have to be considered! The measure from support plane to top of the energy bow is 7.70 mm +/- 0.3 mm!

The movement of the energy bow must not be limited by mounted rockers!

Catwalks of the switch rocker must not exert continuous forces on the button contacts!

It is required to use non-conductive material (no metal or plastic with metal or graphite elements) for the rockers, the frame and the base plate to ensure best transmission range.

PTM 216B is powered by the electromagnetic generator ECO 200. For proper function magnets or ferromagnetic materials are not permitted within a keep-out zone of 60mm around the center of PTM 216B.

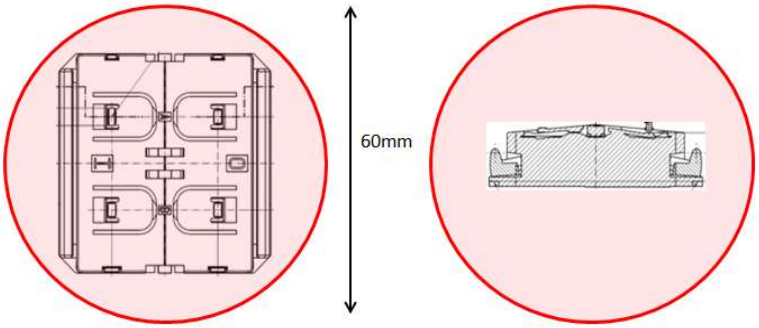

8.3 OEM product QR code

Customers integrating PTM 216B modules into their own OEM products should include a QR code on their product label for the purpose of commissioning as described in chapter 5.2. This QR code can then be scanned by commissioning tools to automatically extract the required product parameters.

The QR code has to use to the ANSI/MH10.8.2-2013 industry standard with the syntax described in chapter 7.2. The OEM product QR code should at a minimum contain the three fields listed in Table 8 below.

Identifier	Length of data (excluding identifier)	Value
30S	12 characters	Static Source Address (hex)
Z	32 characters	Security Key (hex)
30P	10 characters	Order Code: S3221-A216

Table 8 – Required fields for the product QR code

8.3.1 Example for an OEM product QR code

For this example, we consider an OEM product using a PTM 216B module with the following parameters:

- Static Source Address: `E21501500100`
- Security Key: `0123456789ABCDEF0123456789ABCDEF`
- Order Code: `S3221-A216`

The resulting ANSI/MH10.8.2-2013 string would be:

```
30SE21501500100+Z0123456789ABCDEF0123456789ABCDEF+30PS3221-A215
```

Figure 39 below shows the QR code corresponding to this example. This QR code should be part of the OEM product label with a size and resolution that enables easy scanning using a mobile phone or tablet.

Figure 39 – Example for an OEM product QR code

9. Application information

9.1 Transmission range

The main factors that influence the system transmission range are:
- Type and location of the antennas of receiver and transmitter
- Type of terrain and degree of obstruction of the link path
- Sources of interference affecting the receiver
- "Dead spots" caused by signal reflections from nearby conductive objects.

Since the expected transmission range strongly depends on this system conditions, range tests should always be performed to determine the reliably achievable range under the given conditions.

The following figures should be treated as a rough guide only:

- Line-of-sight connections
  Typically 10 m range in corridors, up to 30 m in halls

- Plasterboard walls / dry wood
  Typically 10 m range, through max. 2 walls

- Ferro concrete walls / ceilings
  Typically 5 m range, through max. 1 ceiling (depending on thickness)

- Fire-safety walls, elevator shafts, staircases and similar areas should be considered as shielded

The angle at which the transmitted signal hits the wall is very important. The effective wall thickness – and with it the signal attenuation – varies according to this angle. Signals should be transmitted as directly as possible through the wall. Wall niches should be avoided.

Other factors restricting transmission range include:
- Switch mounting on metal surfaces (up to 30% loss of transmission range)
- Hollow lightweight walls filled with insulating wool on metal foil
- False ceilings with panels of metal or carbon fibre
- Lead glass or glass with metal coating, steel furniture

The distance between the receiver and other transmitting devices such as computers, audio and video equipment that also emit high-frequency signals should be at least 0.5 m.

Note that interference from other radio equipment operating in the 2.4 GHz band (WiFi routers, smartphones, wireless audio and video systems, etc.) can have major impact on radio performance.

9.2 Receiver configuration

PTM 216B communicates user actions (rocker push / release) using a sequence of advertising telegrams as described in chapter 3.

In order to maximize the likelihood of reception of these telegrams, it is necessary that the receiver is either permanently in receive mode on one of the radio channels used by PTM 216B or – if this is not possible – periodically in receive mode for a sufficiently long duration.

Three key timing parameters have to be considered when configuring a receiver (scanner) for periodical reception of advertising events sent by a transmitter (advertiser). These three parameters are:

- Advertising interval
  Time between two advertising events sent by the transmitter
- Scan interval
  Time between the start of two consecutive scanning cycles of the receiver
- Scan window
  Duration for which the receiver will scan within each scanning cycle

Figure 40 below illustrates these three parameters.

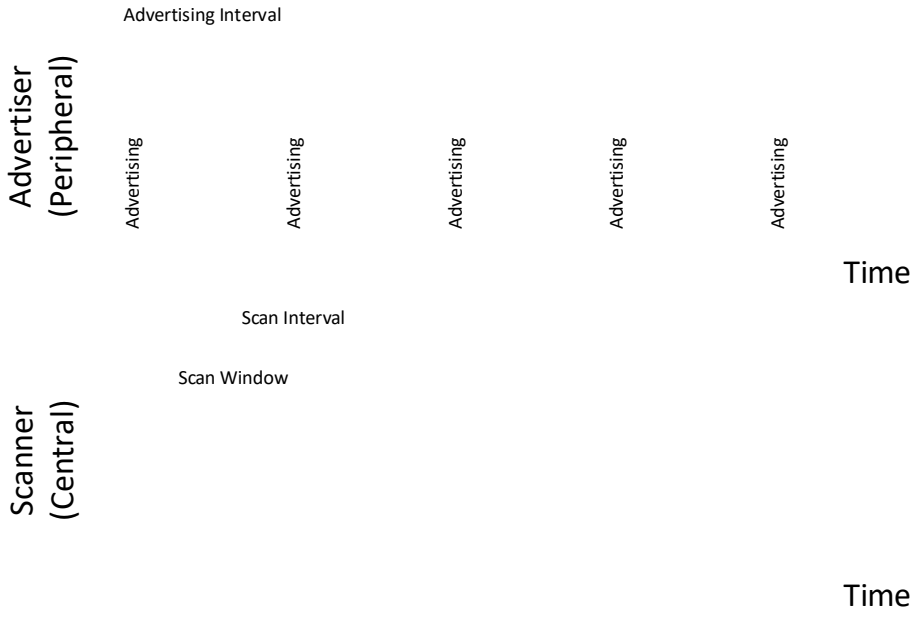

Figure 40 – Scanning parameters

9.2.1 Advertising interval

PTM 216B transmits advertising events with an advertising interval of either 20 ms (default setting) or 10 ms (NFC configurable setting).

The time required to transmit each advertising telegram within the advertising event is approximately 0.5 ms and the time required to transmit the entire advertising event (transmission of three advertising telegrams on three different radio channels including radio channel change) is approximately 2.5 ms.

9.2.2 Scan window

The scan window has to be selected such that the receiver will under all conditions receive at least one full advertising telegram.

To ensure this requirement, we consider the worst-case condition where the receiver starts scanning directly after the start of one transmission and therefore misses a part of it. Under these conditions, it is necessary that the receiver remains active until the next advertising telegram has been fully transmitted. This is illustrated in Figure 41 below.

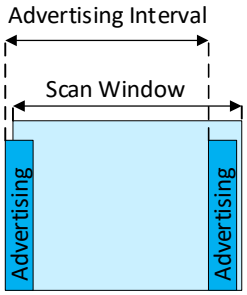

Figure 41 – Scan window setting

From Figure 41 above it can be seen that the minimum duration of the scan window is dependent on the advertising interval:

- If PTM 216B uses 20 ms advertising intervals, then the scan window has to be at least 20 ms (advertising interval) plus 0.5 ms (telegram duration) plus a timing margin to account for the random time offset at the transmitter.
  Using a scan window of at least 23 ms is recommended for this case.

- If PTM 216B uses 10 ms advertising intervals, then the scan window has to be at least 10 ms (advertising interval) plus 0.5 ms (telegram duration) plus a timing margin to account for the random time offset at the transmitter.
  Using a scan window of at least 13 ms is recommended for this case.

9.2.3 Scan interval

The scan interval has to be selected such that the receiver will not be inactive so long that it misses all three advertising events.

The longest period for which the receiver can be inactive is given by the time between the end of the first advertising events (assuming that the receiver exactly misses the last bit of it) and the beginning of the third advertising event (so that this will certainly be received). Figure 42 illustrates this.

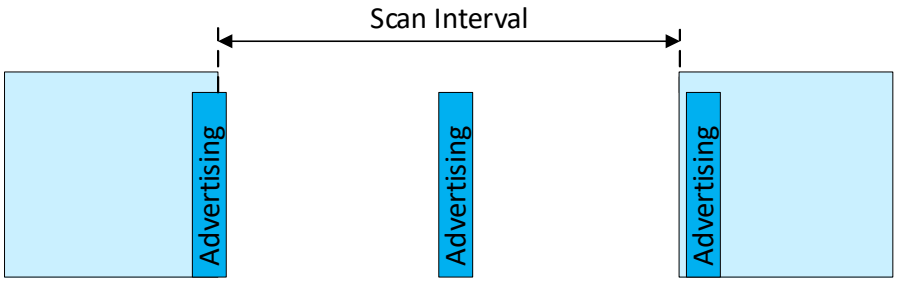

Figure 42 – Scan interval setting

From Figure 42 above it can be seen that the maximum duration of the scan interval is dependent on the advertising interval:

- If PTM 216B uses 20 ms advertising intervals, then the scan interval has to be less than the time between the end of the first advertising event and the begin of the third advertising event (2 * 20 ms = 40 ms) minus 0.5 ms (telegram duration) minus a timing margin to account for the random time offset at the transmitter. Using a scan interval of no more than 37 ms is recommended for this case.

- If PTM 216B uses 10 ms advertising intervals, then the scan interval has to be less than the time between the end of the first advertising event and the begin of the third advertising event (2 * 10 ms = 20 ms) minus 0.5 ms (telegram duration) minus a timing margin to account for the random time offset at the transmitter. Using a scan interval of no more than 17 ms is recommended for this case.

9.2.4 Summary

Table 9 below summarizes the recommended receiver scan settings.

PTM 216B Advertising Interval	Receiver Scan Window (Minimum)	Receiver Scan Interval (Maximum)
10 ms	23 ms	37 ms
20 ms	13 ms	17 ms

Table 9 – Recommended receiver scan settings

10. Regulatory information

PTM 216B has been certified according to FCC (US), ISED (CA) and RED (EU) regulations. Changes or modifications not expressly approved by EnOcean could void the user's authority to operate the equipment.

10.1 RED for European Market

The Radio Equipment Directive (2014/53/EU, typically referred to as RED) replaces R&TTE directive as regulatory framework for radio products in the European Union. All products sold final customers within the European Union have to be compliant to RED. At the time of writing, the text of the RED legislation was available from this link: http://eur-lex.europa.eu/eli/dir/2014/53/oj

Dolphin radio modules are components which are delivered to OEM manufacturers for their use/integration in final or combined products. It is the responsibility of the OEM manufacturer to demonstrate compliance to all applicable EU directives and standards. The EnOcean attestation of conformity can be used as input to the declaration of conformity for the full product.

At the time of writing, guidance on the implementation of EU product rules – the so called "Blue Guide" – was available from this link:
http://ec.europa.eu/DocsRoom/documents/18027/

Specifically within the new RED framework, all OEM manufacturers have for instance to fulfill the following additional requirements:

- Provide product branding (on the product) clearly identifying company name or brand and product name as well as type, charge or serial number for market surveillance
- Include (with the product) documentation containing full postal address of the manufacturer as well as radio frequency band and max. transmitting power
- Include (with the product) user manual, safety information and a declaration of conformity for the final product in local language
- Provide product development and test documentation upon request

Please contact an accredited test house for detailed guidance.

10.2 FCC (United States) Certificate

10.2.1 FCC (United States) Regulatory Statement

This device complies with Part 15 of the FCC rules. Operation is subject to the following two conditions:

1. This device may not cause harmful interference, and
2. This device must accept any interference received, including interference that may cause undesired operation.

To comply with FCC/IC RF exposure limits for general population / uncontrolled exposure, the antenna(s) used for this transmitter must be installed to provide a separation distance of at least 20 cm from all persons and must not be co-located or operating in conjunction with any other antenna or transmitter

Warning
Changes or modifications not expressly approved by the party responsible for compliance could void the user's authority to operate the equipment.

Interference
This equipment has been tested and found to comply with the limits for a Class B digital device, pursuant to Part 15 of the FCC Rules. These limits are designed to provide reasonable protection against harmful interference in a residential installation.

This equipment generates uses and can radiate radio frequency energy and, if not installed and used in accordance with the instructions, may cause harmful interference to radio communications. However, there is no guarantee that interference will not occur in a particular installation.

If this equipment does cause harmful interference to radio or television reception, which can be determined by turning the equipment off and on, the user is encouraged to try to correct the interference by one of the following measures:

- Reorient or relocate the receiving antenna.
- Increase the separation between the equipment and receiver.
- Connect the equipment into an outlet on a circuit different from that to which the receiver is connected.
- Consult the dealer or an experienced radio/TV technician for help.

10.3 IC (Industry Canada) Certificate

10.3.1 IC (Industry Canada) Regulatory Statement

10.3.1.1 English version

WARNING: Changes or modifications not expressly approved by the party responsible for compliance could void the user's authority to operate the equipment.

This device complies with Industry Canada license-exempt RSS standard(s). Operation is subject to the following two conditions:

1. This device may not cause interference, and
2. This device must accept any interference, including interference that may cause undesired operation of the device.

This equipment has been tested and found to comply with the limits for a Class B digital device, pursuant to ICES-003. These limits are designed to provide reasonable protection against harmful interference in a residential installation.

This equipment generates uses and can radiate radio frequency energy and, if not installed and used in accordance with the instructions, may cause harmful interference to radio communications. However, there is no guarantee that interference will not occur in a particular installation.

If this equipment does cause harmful interference to radio or television reception, which can be determined by turning the equipment off and on, the user is encouraged to try to correct the interference by one of the following measures:

- Reorient or relocate the receiving antenna.
- Increase the separation between the equipment and receiver.
- Connect the equipment into an outlet on a circuit different from that to which the receiver is connected.
- Consult the dealer or an experienced radio/TV technician for help

10.3.1.2 French version

PRUDENCE: Changements ou modifications pourraient annuler le droit de l'utilisateur à utiliser l'équipement non autorisées.

Le présent appareil est conforme aux CNR d'Industrie Canada applicables aux appareils radio exempts de licence. L'exploitation est autorisée aux deux conditions suivantes:

1. L'appareil ne doit pas produire de brouillage, et
2. L'utilisateur de l'appareil doit accepter tout brouillage radioélectrique subi, même si le brouillage est susceptible d'en compromettre le fonctionnement.

Cet équipement a été testé et déclaré conforme aux limites d'un appareil numérique de classe B, conformément à la norme ICES-003. Ces limites sont conçues pour fournir une protection raisonnable contre les interférences nuisibles dans une installation résidentielle.

Cet équipement génère, utilise et peut émettre une énergie de radiofréquence et, s'il n'est pas installé et utilisé conformément a ux instructions, il peut causer des interférences nuisibles aux communications radio. Cependant, il n'existe aucune garantie que des interférences no se produiront pas dans une installation particulière.

Si cet équipement provoque des interférences nuisibles à la réception radio ou télévision, ce qui peut être déterminé en mettant l'équipement hors et sous tension, l'utilisateur est encouragé à essayer de corriger l'interférence par une ou plusieurs des mesures suivantes:

- Réorienter ou déplacer l'antenne de réception.
- Augmentez la distance entre l'équipement et le récepteur.
- Connecter l'équipement à une sortie sur un circuit différent de celui sur lequel le récepteur est branché.
- Consulter le revendeur ou un technicien radio / télévision expérimenté pour de l'aide

10.4 ACMA (Australia) Declaration of Conformity

10.5 ARIB (Japan) Construction Type Conformity Certifaction

10.6 India Equipment Type Approval

11. Product history

Table 10 below lists the product history of PTM 216B.

Revision	Release date	Key changes versus previous revision
DA-01	March 2022	First release for lead customers

Table 10 – Product History

A. Parsing PTM 216B radio telegrams

This appendix is intended as an example of how start to parse received PTM 216B radio telegrams. Please refer to chapter 4 first for a description of the BLE frame structure

A.1 Data telegram example

We consider the following raw data telegram data captured from an EnOcean PTM 216B device:

```
D6 BE 89 8E 42 13 9F 1B 00 00 15 E2 0C FF DA 03 69 01 00 00 10 8A D6 C1 7E 16 EE 23
```

A.1.1 BLE frame structure

The message shown above can be parsed into the following components (keep in mind the little endian byte order):

BLE Access Address (4 byte):	0x8E89BED6
BLE Frame Control (2 byte):	0x1342 Size of source address + payload: 0x13 (19 byte) Telegram type: Non-connectable Advertising
BLE Source Address (6 byte):	0xE21500001B9F
Length of payload (1 byte):	0x0C (12 byte)
Type of payload (1 byte):	0xFF (manufacturer-specific data)
Manufacturer ID (2 byte):	0x03DA (EnOcean GmbH)
EnOcean Payload (9 byte):	69 01 00 00 10 8A D6 C1 7E
CRC (3 byte):	16 EE 23

A.1.2 EnOcean data telegram payload structure

The EnOcean data telegram payload can now be parsed as follows:

Sequence Counter (4 byte):	0x00000169
Switch Status:	10 (Release of button B1)
Telegram Signature:	C7 24 EA F0

A.2 Commissioning telegram example

We consider the following raw commissioning telegram data captured from an EnOcean PTM 216B device:

```
D6 BE 89 8E 42 24 9F 1B 00 00 15 E2 1E FF DA 03 71 01 00 00 AB 4B 9A 91 85 2B 70 B8
A6 52 A0 5E 92 BB 12 A0 9F 1B 00 00 15 E2 9E 6D 7C
```

A.2.1 BLE frame structure

The message shown above can be parsed into the following components (keep in mind the little endian byte order):

BLE Access Address (4 byte):	`0x8E89BED6`

BLE Frame Control (2 byte):	`0x2442`
	`Size of source address + payload: 0x24 (36 byte)`
	`Telegram type: Non-connectable Advertising`

BLE Source Address (6 byte):	`0xE21500001B9F`
Length of payload (1 byte):	`0x1E (30 byte)` Note that this field should correctly be set to `0x1D` This issue has been corrected in product version DC-06
Type of payload (1 byte):	`0xFF (manufacturer-specific data)`
Manufacturer ID (2 byte):	`0x03DA (EnOcean GmbH)`
EnOcean Payload (27 byte):	`71 01 00 00 AB 4B 9A 91 85 2B 70 B8 A6 52 A0 5E 92 BB 12 A0 9F 1B 00 00 15 E2`
CRC (3 byte):	`0x7C6D9E`

A.2.2 EnOcean commissioning telegram payload structure

The EnOcean commissioning telegram payload can now be parsed as follows:

Sequence Counter (4 byte):	`0x00000171`
Security Key:	`AB 4B 9A 91 85 2B 70 B8 A6 52 A0 5E 92 BB 12 A0`
Static Source Address:	`0xE21500001B9F`

B. Address resolution for resolvable private addresses (RPA)

PTM 216B provides the option to obfuscate its identity by means of using resolvable private addresses (RPA) as described in chapter 4.4.2. The following chapters describe how to resolve such addresses.

B.1.1 RPA resolution flow

The execution flow for resolving private addresses (RPA) is shown in Figure 43 below.

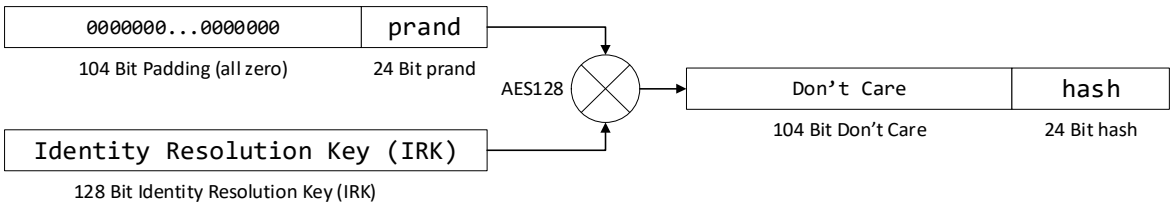

Figure 43 – Execution flow for resolving private addresses (RPA resolution)

Input to the RPA resolution flow is the `prand` part of the resolvable private address field of the received telegram together with one (or several) locally stored IRK.

The receiver will then try for each locally stored IRK if the `hash` generated using the execution flow above matches the `hash` part of the resolvable private address field of the received telegram. If it does, then the IRK identifies the device from which this telegram originated.

B.1.2 Address resolution example

We consider a PTM 216B device with the following IRK (options for determining the IRK / security key of a PTM 216B are described in chapter C.1.3.):

```
BE759A027A4870FD242794F4C45220FB
```

We further consider a telegram having the following resolvable private address:

```
493970E51944
```

We will now test if this resolvable private address was generated using the IRK above.

Referring to the resolvable private address structure shown in Figure 12, we split the resolvable private address into `prand` and `hash` as follows:

```
prand  = (RPA && 0xFFFFFF000000) >> 24
prand  = 0x493970

hash   = RPA && 0x000000FFFFFF
hash   = 0xE51944
```

Next, we verify the address mode by looking at the two most significant bit of `prand`:

```
mode   = (prand && 0xC00000) >> 22
mode   = 0b01
```

Referring to chapter 4.4.2, the setting of `0b01` indicates resolvable private address mode.

To generate the hash, we add 104 bit of padding (all zeros) to `prand`:

```
0x00000000000000000000000000493970
```

We can now generate the hash as AES128 operation between the IRK and the thus padded `prand`:

```
hash   = AES128(IRK; Padded prand)
hash   = AES128(0xBE759A027A4870FD242794F4C45220FB;
0x00000000000000000000000000493970)
```

At the time of writing, a suitable online AES calculator could be found here:
http://testprotect.com/appendix/AEScalc

With this, we can calculate the result as:

```
hash   = 0x286ACB1F9C8A80EE21B3F02225E51944
```

With that, we can verify that the lowest 24 bit of the calculated `hash` (`0xE51944`) match the `hash` that was received as part of the resolvable private address. Therefore, the transmitter of this telegram used this specific IRK to generate this resolvable private address.

C. Authentication of PTM 216B data telegrams

PTM 216B provides the option to authenticate its data telegrams as described in chapter 4.6.3. The authentication mechanism used by PTM 216B is standardized as RFC3610. The full RFC3610 specification could be found here at the time of writing and should be used as primary source of information: https://www.ietf.org/rfc/rfc3610.txt

The following description aims to summarize the security processing steps for users not deeply familiar with cryptography in general or RFC3610 in particular.

C.1 Algorithm input parameters

The purpose of the security processing in PTM 216B is to calculate a unique signature that can be used to verify authenticity (telegram has not been modified) and originality (telegram comes from the assumed sender) of a telegram.

To do so, two types of algorithm parameters are required:

- Constant algorithm input parameters
  These parameters identify high level algorithm and telegram properties and are the same for any PTM 216B telegram

- Variable algorithm input parameters
  These parameters identify telegram-specific parameters and therefore depend on the specifics of the transmitted telegram

C.1.1 Constant input parameters

The RFC3610 implementation in PTM 216B requires two constant input parameters:

- Length field size
  This is the size (in byte) of the field used to encode the length of the input data (which is the payload to be authenticated).
  The maximum size of PTM 216B payload to be authenticated is 13 byte; therefore one byte would be easily sufficient to encode the payload size. The minimum value permitted by the standard is however 2 bytes which is therefore chosen.

- Signature size
  This is the desired size of the generated signature which is 4 byte for PTM 216B

Table 11 below summarizes these constant algorithm parameters.

Parameter	Comment / Description	Example
Length Field Size	Size (in bytes) of the field used to encode the input length	2 (always, minimum permissible size)
Signature Size	Desired size (in byte) of the signature generated by the algorithm	4 (always)

Table 11 – Constant algorithm input parameters

C.1.2 Variable input parameters

The RFC3610 implementation in PTM 216B requires four variable input parameters:

- Source address
  The 6 byte source address used to identify the sender of an authenticated message. The source address is required in little endian (least significant byte first) format.

- Input data (Payload to be authenticated)
  The authenticated payload contains source address, sequence counter, switch status and optional data (if present). See chapter 4.6.3 for a description of the authenticated payload.

- Input length (Size of the payload to be authenticated)
  The length of the payload to be authenticated depends on the amount of optional data used in the telegram. This is configured via the `Configuration` register, see chapter 6.7.3.
  By default, no optional data is present and the length of the authenticated payload is 9 byte.

- Sequence counter
  Each PTM 216B contains a sequence counter which is initialized to zero during production and increased for each telegram that is sent.
  The sequence counter is transmitted as part of the input data.
  The receiver of PTM 216B telegrams keeps track of this counter and will accept only telegrams with counter values higher than the highest previously used value. This eliminates the possibility of reusing previously transmitted telegrams.
  Note that the individual (identical) advertising telegrams used to encode the same data telegram use the same sequence counter value.

- Security key
  Each PTM 216B is programmed with a random 16 byte security key during manufacturing. This key can be modified using the NFC interface, see chapter 6.7.5.

Table 12 below summarizes these parameters.

Parameter	Comment / Description	Example
Source Address	Unique source address of the PTM 216B module (little endian)	`B819000015E2 (little endian representation of E215000019B8)`
Input Data	Telegram data to be authenticated	`0CFFDA035D04000011`
Input Length	Length of input data (in bytes, encoded using 2 bytes)	`0x0009` (if optional data size = 0, default) `0x000A` (if optional data size = 1) `0x000B` (if optional data size = 2) `0x000D` (if optional data size = 4)
Sequence Counter	Incrementing counter to avoid replay Part of the input data (byte 4 … 7)	`5D040000 (little endian representation of the counter value 0000045D)`
Security Key	128 bit random key that is known both to sender and receiver	`3DDA31AD44767AE3CE56DCE2B3CE2ABB`

Table 12 – Variable input parameters

C.1.3 Obtaining the security key

All required parameters except the security key can be directly extracted from the received message that shall be authenticated.

The security key –the common secret shared between sender and receiver – has to be obtained via specific mechanisms. As described in chapter 5, there are three different ways to obtain the security key of a given PTM 216B module:

- Obtaining the key via the NFC configuration interface
- Obtaining the key via the product DMC code
- Obtaining the key via a dedicated commissioning telegram

Each option is described now in detail.

C.1.3.1 Obtaining the security key via NFC interface

Using the Elatec TWN4 reader (as described in chapter 6.3), the security key can be read using the following command sequence:

```
SearchTag(32)
NTAG_PwdAuth(0x00 0x00 0xE2 0x15,0x00 0x00)
NTAG_Read(0x14)
```

This is equivalent to the following binary command sequence:

```
Request:     050020
Response:    0001803807048831A2014F8020060000E2150000

Request:     20060000E2150000
Response:    0001

Request:     200014
Response:    00013DDA31AD44767AE3CE56DCE2B3CE2ABB
```

The tag response to the last command - `NTAG_Read(0x14)` - contains the password:

```
NTAG_Read(0x14)    Result: true       Page: 3DDA31AD44767AE3CE56DCE2B3CE2ABB
```

The password of this device is therefore: `3DDA31AD44767AE3CE56DCE2B3CE2ABB`

C.1.3.2 Obtaining the security key via the product QR code

Each PTM 216B module contains a QR code on its product label which identifies source address and security key of the module as described in chapter 8.3.

The QR code of the device used for this tutorial is shown in Figure 44 below shows the same information encoded according to that.

Figure 44 – Example QR code

The QR code shown above encodes the following text:

30SE215000019B8+Z3DDA31AD44767AE3CE56DCE2B3CE2ABB+30PS3221-A215+2PDC06+
S01234567890123

The security key can then be obtained from the "Z" field as highlighted in red above.

C.1.3.3 Obtaining the security key via a commissioning telegram

PTM 216B modules can send dedicated commissioning telegrams that identify their security key. Transmission of such commissioning telegrams can be triggered by means of a specific button sequence as described in chapter 5.3.

Note that this feature can be disabled via the NFC commissioning interface by setting the `DISABLE LRN TELEGRAM` flag in the `Configuration` register to `0b1` (see chapter 6.7.3).

The resulting commissioning telegram has the following payload:

1D FF DA 03 56 04 00 00 3D DA 31 AD 44 76 7A E3 CE 56 DC E2 B3 CE 2A BB B8 19 00 00
15 E2

Please see Figure 16 in chapter 5.3.2 for a description of the commission telegram structure.

The location of the security key is for reference highlighted red above. This means that the security key of this device is:

3DDA31AD44767AE3CE56DCE2B3CE2ABB

C.1.4 Internal parameters

The RFC3610 implementation in PTM 216B derives a set of internal parameters for further processing from the provided input parameters.

Again, there are two types of internal parameters:

- Constant internal parameters
  These parameters are based on the high level algorithm and telegram properties and are the same for any PTM 216B telegram

- Variable input parameters
  These parameters are based on the telegram-specific parameters and therefore depend on the specifics of the transmitted telegram

C.1.5 Constant internal parameters

The RFC3610 implementation in PTM 216B derives two internal parameters – M' and L' – based on the input data and uses them to construct A0_Flag and B_0_Flag which – together with the iteration counter i – are required for subsequent processing.

The value of these internal parameters - listed in Table 13 below - is the same for all PTM 216B telegrams.

Parameter	Comment / Description	Example
M'	Binary encoded output length `M' = (Output length / 2) - 1`	`0b001` (always)
L'	Binary encoded length field size `L' = length field size - 1`	`0b001` (always)
A0_Flag	`L'`	`0x01` (always)
B0_Flag	`(0b01<<6) + (M'<<3) + L'`	`0x49` (always)
i	Iteration counter	`0x0000 (always)`

Table 13 – Constant internal parameters

C.1.6 Variable internal parameters

The RFC3610 implementation in PTM 216B derives four internal parameters – Nonce, A0, B0 and B1 – based on the telegram specific input data and the constant internal parameters.

These variable internal parameters - listed in Table 14 below - are then used together with the security key to calculate the actual signature.

Parameter	Comment / Description	Example
Nonce	13 byte initialization vector based on concatenation of source address, sequence counter and padding, see 4.7.1	`FE19000015E2D00A0000000000`
A0	`A0_Flag` followed by `Nonce` followed by 2 byte `0x00`	`01FE19000015E2D00A00000000000000`
B0	`B0_Flag` followed by `Nonce` followed by 2 byte `0x00` (no message to encode)	`49FE19000015E2D00A00000000000000`
B1	`Input Length` followed by `Input Data` followed by 5 / 4 / 3 / 1 byte of `0x00` padding (for optional data size = 0 / 1 / 2 / 4 byte)	`00090CFFDA03D00A0000030000000000`

Table 14 – Variable internal parameters

C.2 Algorithm execution sequence

The algorithm uses the variable internal parameters `A_0`, `B_0`, `B_1` together with the private key to generate the authentication vector `T_0` using three AES-128 and two XOR operations. The algorithm execution sequence is shown in Figure 45 below. The first four bytes of `T_0` are then used to authenticate PTM 216B telegrams.

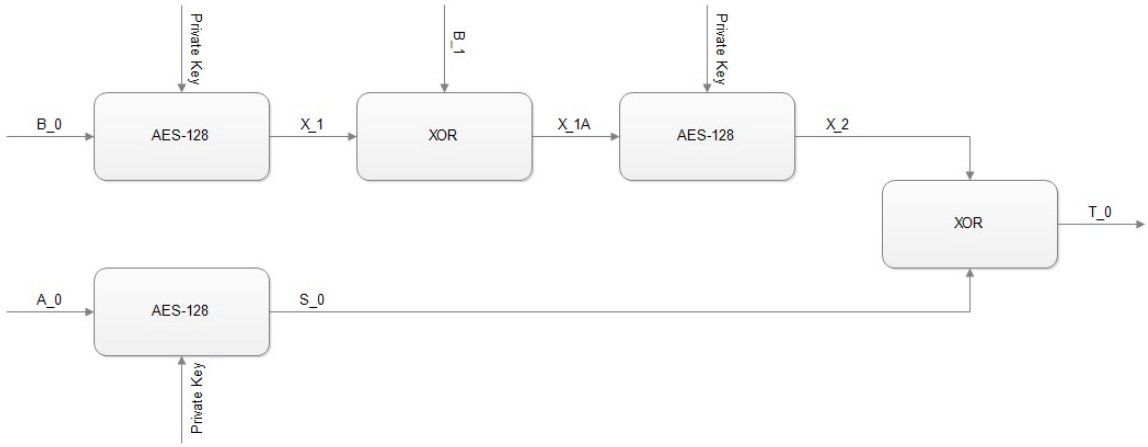

Figure 45 – Authentication algorithm sequence

C.3 Examples

The following four chapters give step by step examples based on one actual device and 0 / 1 / 2 or 4 byte of optional data.

C.3.1 Data telegram without optional data

For this example, we consider the following telegram payload received from a PTM 216B with the source address `E215000019B8` and security key `3DDA31AD44767AE3CE56DCE2B3CE2ABB`:

```
0C FF DA 03 5D 04 00 00 11 B2 FA 88 FF
```

The last four bytes of this payload (`B2 FA 88 FF`) are the sender-provided signature which has to be authenticated (compared against the signature the receiver calculates based on its own security key).

The variable input parameters are therefore the following:

Parameter	**In this example**
Source Address	`B819000015E2 (little endian representation of E215000019B8)`
Input Data	`0CFFDA035D04000011`
Input Length	`0x0009`
Sequence Counter	`5D040000`
Security Key	`3DDA31AD44767AE3CE56DCE2B3CE2ABB`

The constant internal parameters are always the same:

Parameter	**In this example**
A0_Flag	`0x01` (always)
B0_Flag	`0x49` (always)
i	`0x0000` (always)

Based on variable input data and constant internal algorithm parameters, we can now derive the following variable internal parameters:

Parameter	**In this example**
Nonce	`B819000015E25D040000000000`
A0	`01B819000015E25D0400000000000000`
B0	`49B819000015E25D0400000000000000`
B1	`00090CFFDA035D040000110000000000`

We can now calculate the signature using AES128 and XOR operations.

At the time of writing, a suitable online AES calculator could be found here:
http://testprotect.com/appendix/AEScalc

Likewise, a suitable XOR calculator could be found here:
http://xor.pw/?

The execution sequence would then be as follows:

```
X_1                      =                      AES128(B0,                      Key)
X_1   =   AES128(49B819000015E25D0400000000000000,   3DDA31AD44767AE3CE56DCE2B3CE2ABB)
X_1 = 41ef09792ae152ae52c671435c1f247d

X_1A                      =                      XOR(X_1,                      B_1)
X_1A = XOR(41ef09792ae152ae52c671435c1f247d, 00090CFFDA035D040000110000000000)
X_1A = 41e60586f0e20faa52c660435c1f247d

X_2 = AES128(X1A, Key)
X_2 = AES128(41e60586f0e20faa52c660435c1f247d, 3DDA31AD44767AE3CE56DCE2B3CE2ABB)
X_2                        =                        8d89e733da516ae3e08f9e30184909fc

S_0                      =                      AES128(A0,                      Key)
S_0   =   AES128(01B819000015E25D0400000000000000,   3DDA31AD44767AE3CE56DCE2B3CE2ABB)
S_0 = 3f736fcc8bcaf2d4aabca0260fab7976

T_0                       =                      XOR(X_2,                      S_0)
T_0 = XOR(8d89e733da516ae3e08f9e30184909fc, 3f736fcc8bcaf2d4aabca0260fab7976)
T_0 = b2fa88ff519b98374a333e1617e2708a
```

The calculated signature is formed by the first four bytes of `T_0`, i.e. it is `B2 FA 88 FF`.

The calculated signature matches the signature that was transmitted as part of the payload. This proves that the telegram originates from a sender that possesses the same security key and the telegram content has not been modified.

C.3.2 Data telegram with 1 byte optional data

For this example, we consider the following telegram payload received from a PTM 216B with the source address `E215000019B8` and security key `3DDA31AD44767AE3CE56DCE2B3CE2ABB`:

```
0D FF DA 03 62 04 00 00 10 12 B9 FE AC C1
```

The last four bytes of this payload (`B9 FE AC C1`) are the sender-provided signature which has to be authenticated. The variable input parameters are therefore the following:

Parameter	In this example
Source Address	`B819000015E2 (little endian representation of E215000019B8)`
Input Data	`0DFFDA03620400001012`
Input Length	`0x000A`
Sequence Counter	`62040000`
Security Key	`3DDA31AD44767AE3CE56DCE2B3CE2ABB`

Based on variable input data and constant internal algorithm parameters, we can now derive the following variable internal parameters:

Parameter	In this example
Nonce	`B819000015E262040000000000`
A0	`01B819000015E2620400000000000000`
B0	`49B819000015E2620400000000000000`
B1	`000A0DFFDA03620400001012000000000`

The execution sequence would then be as follows:

```
X_1                      =                      AES128(B0,                      Key)
X_1   =   AES128(49B819000015E2620400000000000000,   3DDA31AD44767AE3CE56DCE2B3CE2ABB)
X_1 = dc8d685f968e795b23f4370b3091f33f

X_1A                      =                      XOR(X_1,                      B_1)
X_1A = XOR(dc8d685f968e795b23f4370b3091f33f, 000A0DFFDA03620400001012000000000)
X_1A = dc8765a04c8d1b5f23f427193091f33f

X_2 = AES128(X1A, Key)
X_2 = AES128(dc8765a04c8d1b5f23f427193091f33f, 3DDA31AD44767AE3CE56DCE2B3CE2ABB)
X_2                      =                      231be2ff54ca62fb38d32eaaaf1b447d

S_0                      =                      AES128(A0,                      Key)
S_0   =   AES128(01B819000015E2620400000000000000,   3DDA31AD44767AE3CE56DCE2B3CE2ABB)
S_0 = 9ae54e3e95de9f91a0c279537bc25b00

T_0                      =                      XOR(X_2,                      S_0)
T_0 = XOR(231be2ff54ca62fb38d32eaaaf1b447d, 9ae54e3e95de9f91a0c279537bc25b00)
T_0 = b9feacc1c114fd6a981157f9d4d91f7d
```

The calculated signature is formed by the first four bytes of `T_0`, i.e. it is `B9 FE AC C1`.

C.3.3 Data telegram with 2 byte optional data

For this example, we consider the following telegram payload received from a PTM 216B with the source address `E215000019B8` and security key `3DDA31AD44767AE3CE56DCE2B3CE2ABB`:

```
0E FF DA 03 63 04 00 00 11 12 34 52 E0 51 16
```

The last four bytes of this payload (`52 E0 51 16`) are the sender-provided signature which has to be authenticated. The variable input parameters are therefore the following:

Parameter	In this example
Source Address	`B819000015E2 (little endian representation of E215000019B8)`
Input Data	`0EFFDA0363040000111234`
Input Length	`0x000B`
Sequence Counter	`63040000`
Security Key	`3DDA31AD44767AE3CE56DCE2B3CE2ABB`

Based on variable input data and constant internal algorithm parameters, we can now derive the following variable internal parameters:

Parameter	In this example
Nonce	`B819000015E263040000000000`
A0	`01B819000015E2630400000000000000`
B0	`49B819000015E2630400000000000000`
B1	`000B0EFFDA03630400001112340000000`

The execution sequence would then be as follows:

```
X_1                      =                      AES128(B0,                      Key)
X_1   =   AES128(49B819000015E2630400000000000000,   3DDA31AD44767AE3CE56DCE2B3CE2ABB)
X_1 = ab5ec24beabc9ddeeb73751c7734cc64

X_1A                      =                      XOR(X_1,                      B_1)
X_1A = XOR(ab5ec24beabc9ddeeb73751c7734cc64, 000B0EFFDA03630400001112340000000)
X_1A = ab55ccb430bffedaeb73640e4334cc64

X_2 = AES128(X1A, Key)
X_2 = AES128(ab55ccb430bffedaeb73640e4334cc64, 3DDA31AD44767AE3CE56DCE2B3CE2ABB)
X_2                       =                       d33e96d7a105c4e8543207f9e75e6cfe

S_0                      =                      AES128(A0,                      Key)
S_0   =   AES128(01B819000015E2630400000000000000,   3DDA31AD44767AE3CE56DCE2B3CE2ABB)
S_0 = 81dec7c16915c6647d92b0668f65e9c9

T_0                      =                      XOR(X_2,                      S_0)
T_0 = XOR(d33e96d7a105c4e8543207f9e75e6cfe, 81dec7c16915c6647d92b0668f65e9c9)
T_0 = 52e05116c810028c29a0b79f683b8537
```

The calculated signature is formed by the first four bytes of `T_0`, i.e. it is `52 E0 51 16`.

C.3.4 Data telegram with 4 byte optional data

For this example, we consider the following telegram payload received from a PTM 216B with the source address `E215000019B8` and security key `3DDA31AD44767AE3CE56DCE2B3CE2ABB`:

```
10 FF DA 03 6A 04 00 00 10 12 34 56 78 2C 9E 10 95
```

The last four bytes of this payload (`2C 9E 10 95`) are the sender-provided signature which has to be authenticated. The variable input parameters are therefore the following:

Parameter	In this example
Source Address	`B8:19:00:00:15:E2 (little endian of E2:15:00:00:19:B8)`
Input Data	`10:FF:DA:03:6A:04:00:00:10:12:34:56:78`
Input Length	`00:0D`
Sequence Counter	`6A:04:00:00`
Security Key	`3D:DA:31:AD:44:76:7A:E3:CE:56:DC:E2:B3:CE:2A:BB`

Based on variable input data and constant internal algorithm parameters, we can now derive the following variable internal parameters:

Parameter	In this example
Nonce	`B819000015E26A040000000000`
A0	`01B819000015E26A0400000000000000`
B0	`49B819000015E26A0400000000000000`
B1	`000D10FFDA036A040000101234567800`

The execution sequence would then be as follows:

```
X_1                      =                      AES128(B0,                      Key)
X_1   =   AES128(49B819000015E26A0400000000000000,   3DDA31AD44767AE3CE56DCE2B3CE2ABB)
X_1 = 434FA5855B8A8A8AE99BF1CB114A51B7

X_1A                      =                      XOR(X_1,                      B_1)
X_1A = XOR(434FA5855B8A8A8AE99BF1CB114A51B7, 000D10FFDA036A040000101234567800)
X_1A = 4342B57A8189E08EE99BE1D9251C29B7

X_2 = AES128(X1A, Key)
X_2 = AES128(4342B57A8189E08EE99BE1D9251C29B7, 3DDA31AD44767AE3CE56DCE2B3CE2ABB)
X_2                       =                       12C78B85A4ECB6F34DAFF7651DB8E386

S_0                      =                      AES128(A0,                      Key)
S_0   =   AES128(01B819000015E2630400000000000000,   3DDA31AD44767AE3CE56DCE2B3CE2ABB)
S_0 = 3E599B103F33447E6B46EEC4A042D0BC

T_0                      =                      XOR(X_2,                      S_0)
T_0 = XOR(12c78b85a4ecb6f34daff7651db8e386, 3e599b103f33447e6b46eec4a042d0bc)
T_0 = 2C9E10959BDFF28D26E919A1BDFA333A
```

The calculated signature is formed by the first four bytes of `T_0`, i.e. it is `2C 9E 10 95`.