TEST REPORT

Applicant Name:	YEALINK(XIAMEN) NETWORK TECHNOLOGY CO.,LTD.
Address:	No.666 Hu'an Rd. Huli District Xiamen City, Fujian, P.R. China
Report Number:	2601P38592E-RFE
FCC ID:	T2C-MSKETCH
IC:	10741A-MSKETCH

Test Standard (s)

FCC PART 15.407; RSS-247 ISSUE 4, July 24, 2025

Sample Description

Product Type:	Video Conferencing Camera
Model No.:	MSketch
Multiple Model(s) No.:	N/A
Trade Mark:	Yealink
Date Received:	2026-01-23
Issue Date:	2026-08-21

Test Result:	Pass▲

▲ In the configuration tested, the EUT complied with the standards above.

Prepared and Checked By:

GaLa Liu

GaLa Liu
RF Engineer

Approved By:

Nancy Wang

Nancy Wang
RF Supervisor

Note: The information marked # is provided by the applicant, the laboratory is not responsible for its authenticity and this information can affect the validity of the result in the test report. Customer model name, addresses, names, trademarks etc. are included.

This report cannot be reproduced except in full, without prior written approval of the Company. Unless otherwise stated the results shown in this test report refer only to the sample(s) tested. This report is valid only with a valid digital signature. The digital signature may be available only under the Adobe software above version 7.0.
This report must not be used by the customer to claim product certification, approval, or endorsement by NVLAP or any agency of the U.S. Government.
This report may contain data that are not covered by the NVLAP accreditation and are marked with an asterisk "▼".

TABLE OF CONTENTS

DOCUMENT REVISION HISTORY **3**

GENERAL INFORMATION **4**
- PRODUCT DESCRIPTION FOR EQUIPMENT UNDER TEST (EUT) 4
- TEST METHODOLOGY 4
- OBJECTIVE 5
- MEASUREMENT UNCERTAINTY 5
- TEST FACILITY 5

SYSTEM TEST CONFIGURATION **6**
- DESCRIPTION OF TEST CONFIGURATION 6
- EUT EXERCISE SOFTWARE 6
- EQUIPMENT MODIFICATIONS 6
- SUPPORT EQUIPMENT LIST AND DETAILS 6
- EXTERNAL I/O CABLE 6

SUMMARY OF TEST RESULTS **7**

TEST EQUIPMENT LIST **8**

APPLICABLE STANDARDS **9**
- DFS REQUIREMENT 9
- DFS MEASUREMENT SYSTEM 13
- SYSTEM BLOCK DIAGRAM 13
- CONDUCTED METHOD 14
- RADIATED METHOD 15
- TEST PROCEDURE 15

TEST RESULTS **16**
- DESCRIPTION OF EUT 16
- RADAR WAVEFORM CALIBRATION 16
- TEST DATA 16

CHANNEL MOVE TIME AND CHANNEL CLOSING TRANSMISSION TIME **17**
- TEST PROCEDURE 17
- TEST DATA 17

NON-OCCUPANCY PERIOD **18**
- TEST PROCEDURE 18
- TEST DATA 18

EUT PHOTOGRAPHS **19**

TEST SETUP PHOTOGRAPHS **20**

APPENDIX **21**
- APPENDIX A: DFS DETECTION THRESHOLDS 21
- APPENDIX B: CHANNEL MOVE TIME AND CHANNEL CLOSING TRANSMISSION TIME 23
- APPENDIX C: NON-OCCUPANCY PERIOD 25

DOCUMENT REVISION HISTORY

Revision Number	Report Number	Description of Revision	Date of Revision
0	2601P38592E-RFE	Original Report	2026-08-21

GENERAL INFORMATION

Product Description for Equipment under Test (EUT)

HVIN	MSKETCH
FVIN	361.340.256.1
Frequency Range	5GHz Wi-Fi: 5250-5350 MHz; 5470-5600MHz&5650-5725MHz
Mode	802.11a/n20/n40/ac20/ac40/ax20/ax40
Maximum Conducted Average Output Power	5250-5350MHz: 14.29dBm 5470-5600MHz&5650-5725MHz: 13.31dBm
Modulation Technique	OFDM, OFDMA
Antenna Specification#	5250-5350MHz: 1.83dBi, 5470-5725MHz: 0.94dBi (provided by the applicant)
Voltage Range	DC 48V from POE
Sample serial number	3GL2-3 (Assigned by BACL, Shenzhen)
Sample/EUT Status	Good condition
Adapter Information	N/A
Note: The 5600-5650MHz was disabled by software.	

Test Methodology

FCC KDB 905462 D02 UNII DFS Compliance Procedures New Rules v02.

FCC KDB 905462 D03 Client Without DFS New Rules v01r02.

Each test item follows test standards and with no deviation.

Objective

This test report is in accordance with Part 2-Subpart J, Part 15-Subparts E of the Federal Communications Commission's rules, and RSS-247 Issue 4, July 24, 2025 of the Innovation, Science and Economic Development Canada.

The objective is to determine compliance with FCC Part 15, Subpart E, section 15.407 Dynamic Frequency Selection (DFS) for devices operating in the bands 5250-5350 MHz, 5470-5725 MHz.

The objective is to determine compliance with Dynamic Frequency Selection (DFS) of the RSS-247 Issue 4, July 24, 2025 of the Innovation, Science and Economic Development Canada for devices operating in the bands 5250-5350 MHz, 5470-5725 MHz.

Measurement Uncertainty

Parameter	Uncertainty
Time	±1%(k=2, 95% level of confidence)
Temperature	±0.4℃
Humidity	±2%
Supply voltages	DC±0.4%;AC±1%

Note: The extended uncertainty given in this report is obtained by combining the standard uncertainty times the coverage factor K with the 95% confidence interval. Otherwise required by the applicant or Product Regulations, Decision Rule in this report did not consider the uncertainty.

Test Facility

The Test site used by Bay Area Compliance Laboratories Corp. (Shenzhen) to collect test data is located on the 5F(B-West) , 6F, 7F, the 3rd Phase of Wan Li Industrial Building D, Shihua Rd, FuTian Free Trade Zone, Shenzhen, China.

The lab has been recognized as the FCC accredited lab under the KDB 974614 D01 and is listed in the FCC Public Access Link (PAL) database, test firm registration No.: 715558, the FCC Designation No. : CN5045.

The lab has been recognized by Innovation, Science and Economic Development Canada to test to Canadian radio equipment requirements, the CAB identifier: CN0023.

SYSTEM TEST CONFIGURATION

Description of Test Configuration

The EUT was configured for testing in an engineering mode which was provided by the manufacturer.

EUT Exercise Software

N/A

Equipment Modifications

N/A

Support Equipment List and Details

Manufacturer	Description	Model	Serial Number
DELL	PC	Vostro 3690	E569659A9981
DELL	LED display	E2423H	CN-OPTM1T
DELL	Keyboard	KB1421	E134780
DELL	Mouse	WM-100	Unknown
Grandstream	Router	GWN7665 (FCC ID: YZZGWN7665) (IC: 11964A-GWN7665)	C074AD251F0A
DELL	Notebook	DESKTOP-1630AQ3	9RVYFH2
Unknown	Receptacle	Unknown	Unknown
TP-LINK	POE	TL-POE2412G	T240050-2-PoE

External I/O Cable

Cable Description	Length (m)	From Port	To
Unshielded Un-detachable AC cable	1.2	AC Mains	Receptacle
Unshielded Detachable AC cable	1.0	Receptacle	POE
Unshielded Detachable RJ45 cable	1.0	Router	POE
Unshielded Detachable RJ45 cable	1.0	Notebook	POE

SUMMARY OF TEST RESULTS

The following result table represents the list of measurements required under the CFR §47 Part 15.407(h), RSS-247 Issue 4 §7.3.6 and KDB: 905462 D02 UNII DFS Compliance Procedures New Rules v02

Items	Description of Test	Result
Detection Bandwidth	UNII Detection Bandwidth	Not Applicable
Performance Requirements Check	Initial Channel Availability Check Time (CAC)	Not Applicable
	Radar Burst at the Beginning of the CAC	Not Applicable
	Radar Burst at the End of the CAC	Not Applicable
In-Service Monitoring	Channel Move Time	Compliant
	Channel Closing Transmission Time	Compliant
	Non-Occupancy Period	Compliant
Radar Detection	Statistical Performance Check	Not Applicable

Note: EUT is a client without radar detection.

TEST EQUIPMENT LIST

Manufacturer	Description	Model	Serial Number	Calibration Date	Calibration Due Date
Tonscend	RF control Unit	JS0806-2	19D8060154	2025/07/18	2026/07/17
Tonscend	Test software	JS1120-3	V3.3.38	NCR	NCR
Rohde & Schwarz	Spectrum Analyzer	FSV40	101473	2025/09/01	2026/08/31
Keysight	MXG Vector Signal Generator	N5182B	MY53051503	2025/09/18	2026/09/17
Unknown	10dB Attenuator	Unknown	F-03-EM224	2025/06/26	2026/06/25
Unknown	10dB Attenuator	Unknown	F-03-EM224	2026/06/24	2027/06/23
HP	Power Splitter	11667A	1610A	2025/06/26	2026/06/25
HP	Power Splitter	11667A	1610A	2026/06/24	2027/06/23

*** Statement of Traceability:** Bay Area Compliance Laboratories Corp. (Shenzhen) attests that all calibrations have been performed in accordance to requirements that traceable to National Primary Standards and International System of Units (SI).

APPLICABLE STANDARDS

DFS Requirement

CFR §47 Part 15.407(h) & RSS-247 Issue 4, July 24, 2025 section 7.3.6

FCC KDB 905462 D02 UNII DFS Compliance Procedures New Rules v02

Table 1: Applicability of DFS Requirements Prior to Use of a Channel

Requirement	Operational Mode		
	Master	Client Without Radar Detection	Client With Radar Detection
Non-Occupancy Period	Yes	Not required	Yes
DFS Detection Threshold	Yes	Not required	Yes
Channel Availability Check Time	Yes	Not required	Not required
U-NII Detection Bandwidth	Yes	Not required	Yes

Table 2: Applicability of DFS requirements during normal operation

Requirement	Operational Mode	
	Master Device or Client with Radar Detection	Client Without Radar Detection
DFS Detection Threshold	Yes	Not required
Channel Closing Transmission Time	Yes	Yes
Channel Move Time	Yes	Yes
U-NII Detection Bandwidth	Yes	Not required

Additional requirements for devices with multiple bandwidth modes	Master Device or Client with Radar Detection	Client Without Radar Detection
U-NII Detection Bandwidth and Statistical Performance Check	All BW modes must be tested	Not required
Channel Move Time and Channel Closing Transmission Time	Test using widest BW mode available	Test using the widest BW mode available for the link
All other tests	Any single BW mode	Not required
Note: Frequencies selected for statistical performance check (Section 7.8.4) should include several frequencies within the radar detection bandwidth and frequencies near the edge of the radar detection bandwidth. For 802.11 devices it is suggested to select frequencies in each of the bonded 20 MHz channels and the channel center frequency.		

Table 3: DFS Detection Thresholds for Master Devices and Client Devices With Radar Detection

Maximum Transmit Power	Value (See Notes 1, 2, and 3)
EIRP ≥ 200 milliwatt	-64 dBm
EIRP < 200 milliwatt and power spectral density < 10 dBm/MHz	-62 dBm
EIRP < 200 milliwatt that do not meet the power spectral density requirement	-64 dBm
Note 1: This is the level at the input of the receiver assuming a 0 dBi receive antenna. **Note 2:** Throughout these test procedures an additional 1 dB has been added to the amplitude of the test transmission waveforms to account for variations in measurement equipment. This will ensure that the test signal is at or above the detection threshold level to trigger a DFS response. **Note3:** EIRP is based on the highest antenna gain. For MIMO devices refer to KDB Publication 662911 D01.	

Table 4: DFS Response Requirement Values

Parameter	Value
Non-occupancy period	Minimum 30 minutes
Channel Availability Check Time	60 seconds
Channel Move Time	10 seconds See Note 1.
Channel Closing Transmission Time	200 milliseconds + an aggregate of 60 milliseconds over remaining 10 second period. See Notes 1 and 2.
U-NII Detection Bandwidth	Minimum 100% of the U-NII 99% transmission power bandwidth. See Note 3.
Note 1: *Channel Move Time* and the *Channel Closing Transmission Time* should be performed with Radar Type 0. The measurement timing begins at the end of the Radar Type 0 burst. **Note 2:** The *Channel Closing Transmission Time* is comprised of 200 milliseconds starting at the beginning of the *Channel Move Time* plus any additional intermittent control signals required to facilitate a *Channel* move (an aggregate of 60 milliseconds) during the remainder of the 10 second period. The aggregate duration of control signals will not count quiet periods in between transmissions. **Note 3:** During the *U-NII Detection Bandwidth* detection test, radar type 0 should be used. For each frequency step the minimum percentage of detection is 90 percent. Measurements are performed with no data traffic.	

Table 5 – Short Pulse Radar Test Waveforms

Radar Type	Pulse Width (µsec)	PRI (µsec)	Number of Pulses	Minimum Percentage of Successful Detection	Minimum Number of Trials
0	1	1428	18	See Note 1	See Note 1
1	1	Test A: 15 unique PRI values randomly selected from the list of 23 PRI values in Table 5a	$\text{Roundup}\left\{\left(\frac{1}{360}\right)\cdot\left(\frac{19\cdot 10^6}{\text{PRI}_{\mu\text{sec}}}\right)\right\}$	60%	30
		Test B: 15 unique PRI values randomly selected within the range of 518-3066 µsec, with a minimum increment of 1 µsec, excluding PRI values selected in Test A			
2	1-5	150-230	23-29	60%	30
3	6-10	200-500	16-18	60%	30
4	11-20	200-500	12-16	60%	30
Aggregate (Radar Types 1-4)				80%	120
Note 1: Short Pulse Radar Type 0 should be used for the detection bandwidth test, channel move time, and channel closing time tests.					

A minimum of 30 unique waveforms are required for each of the Short Pulse Radar Types 2 through 4. If more than 30 waveforms are used for Short Pulse Radar Types 2 through 4, then each additional waveform must also be unique and not repeated from the previous waveforms. If more than 30 waveforms are used for Short Pulse Radar Type 1, then each additional waveform is generated with Test B and must also be unique and not repeated from the previous waveforms in Tests A or B.

For example if in Short Pulse Radar Type 1 Test B a PRI of 3066 usec is selected, the number of pulses would be $\text{Roundup}\left\{\left(\frac{1}{360}\right)\cdot\left(\frac{19\cdot 10^6}{3066}\right)\right\} = \text{Roundup}\{17.2\} = 18.$

Table 5a - Pulse Repetition Intervals Values for Test A

Pulse Repetition Frequency Number	Pulse Repetition Frequency (Pulses Per Second)	Pulse Repetition Interval (Microseconds)
1	1930.5	518
2	1858.7	538
3	1792.1	558
4	1730.1	578
5	1672.2	598
6	1618.1	618
7	1567.4	638
8	1519.8	658
9	1474.9	678
10	1432.7	698
11	1392.8	718
12	1355	738
13	1319.3	758
14	1285.3	778
15	1253.1	798
16	1222.5	818
17	1193.3	838
18	1165.6	858
19	1139	878
20	1113.6	898
21	1089.3	918
22	1066.1	938
23	326.2	3066

The aggregate is the average of the percentage of successful detections of Short Pulse Radar Types 1-4. For example, the following table indicates how to compute the aggregate of percentage of successful detections.

Radar Type	Number of Trials	Number of Successful Detections	Minimum Percentage of Successful Detection
1	35	29	82.9%
2	30	18	60%
3	30	27	90%
4	50	44	88%
Aggregate (82.9% + 60% + 90% + 88%)/4 = 80.2%			

Table 6 – Long Pulse Radar Test Waveform

Radar Type	Pulse Width (µsec)	Chirp Width (MHz)	PRI (µsec)	Number of Pulses per *Burst*	Number of *Bursts*	Minimum Percentage of Successful Detection	Minimum Number of Trials
5	50-100	5-20	1000-2000	1-3	8-20	80%	30

Table 7 – Frequency Hopping Radar Test Waveform

Radar Type	Pulse Width (µsec)	PRI (µsec)	Pulses per Hop	Hopping Rate (kHz)	Hopping Sequence Length (msec)	Minimum Percentage of Successful Detection	Minimum Number of Trials
6	1	333	9	0.333	300	70%	30

DFS Measurement System

DFS measurement system consists of two subsystems: (1) The radar signal generating subsystem and (2) the traffic monitoring subsystem.

System Block Diagram

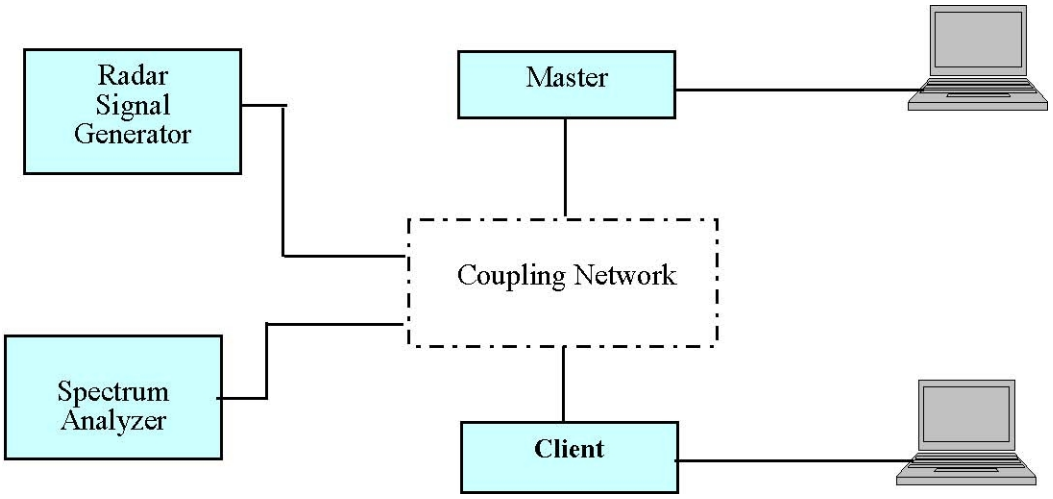

Conducted Method

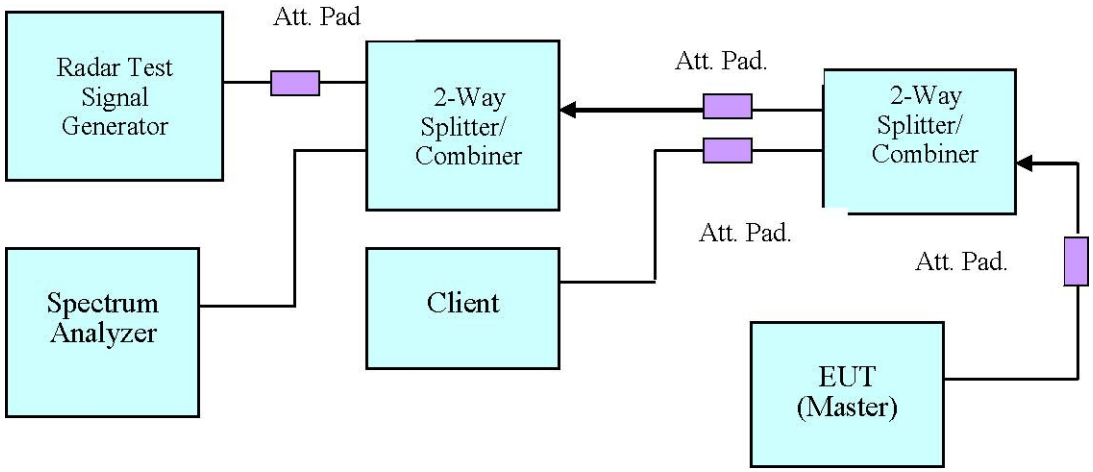

Setup for Master with injection at the Master

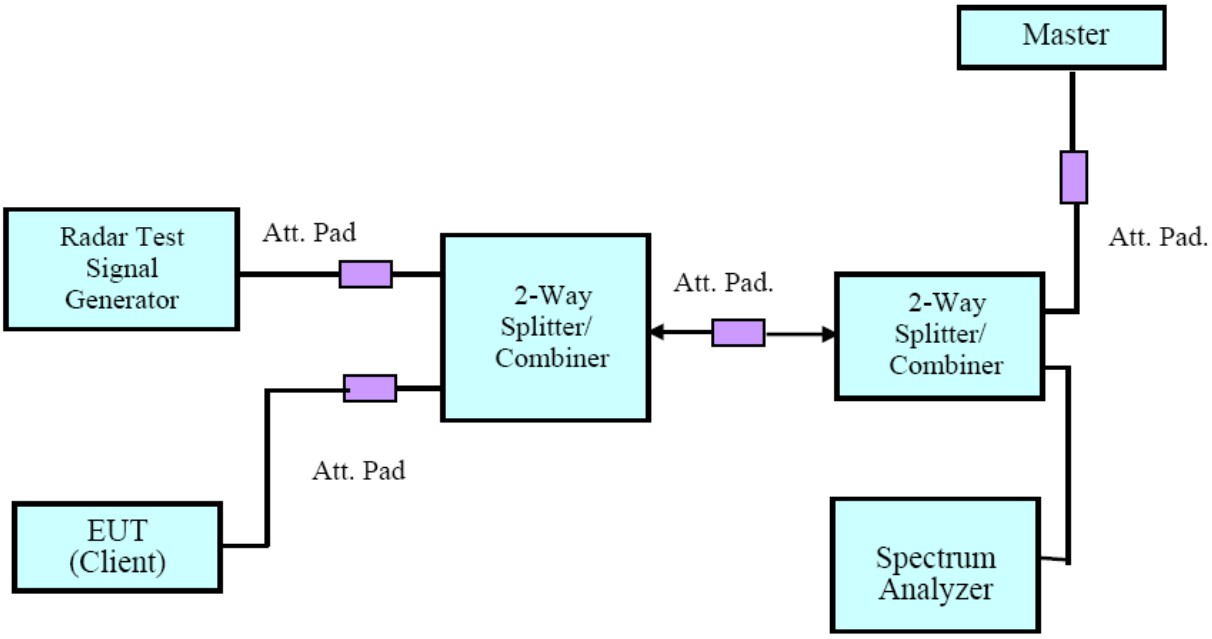

Setup for Client with injection at the Master

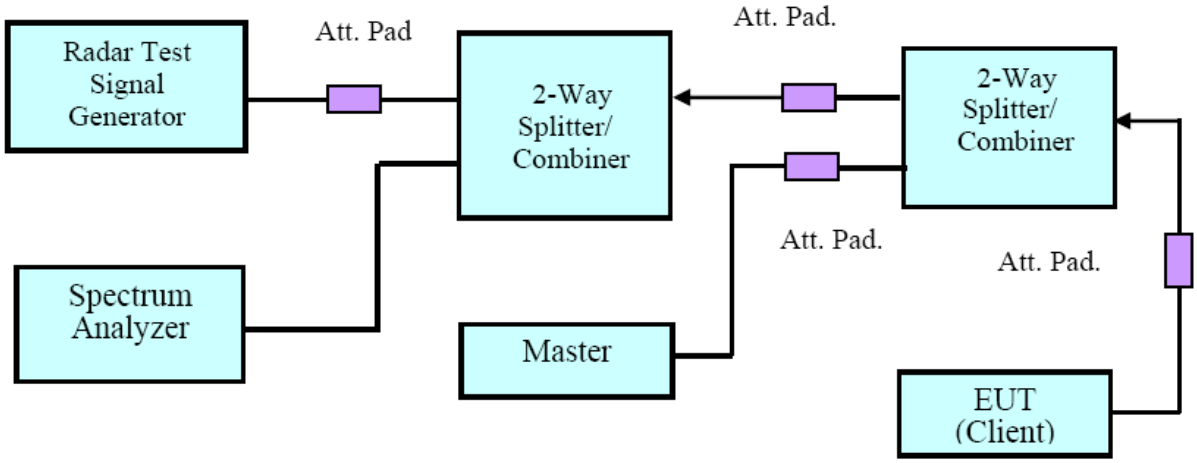

Setup for Client with injection at the Client

Radiated Method

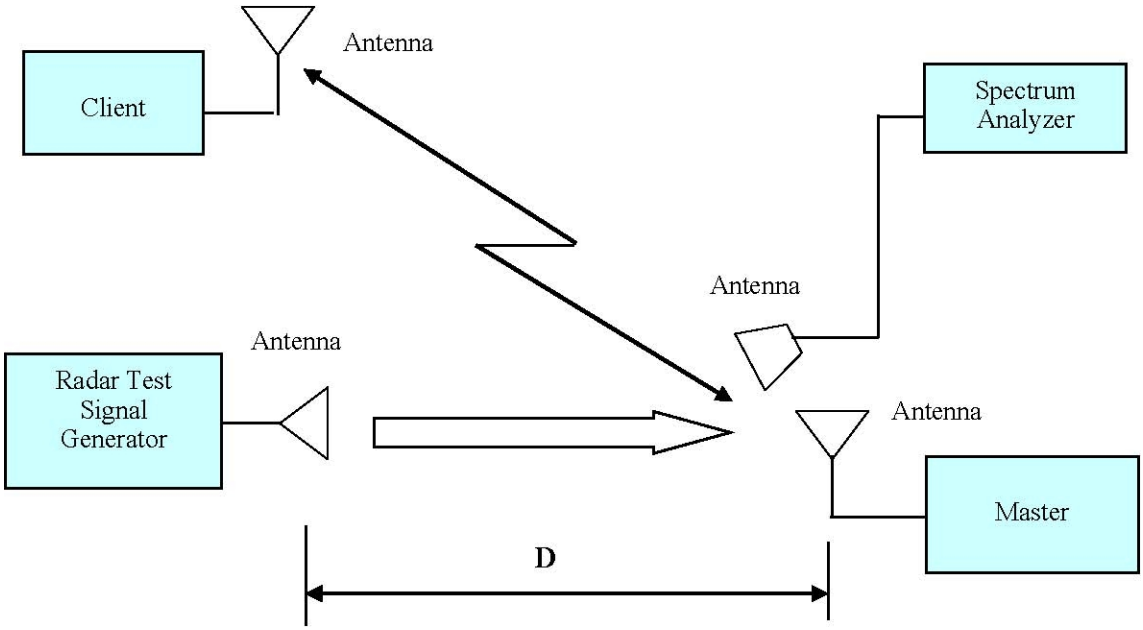

Test Procedure

A spectrum analyzer is used as a monitor verifies that the EUT status including Channel Closing Transmission Time and Channel Move Time, and does not transmit on a Channel during the Non-Occupancy Period after the diction.

TEST RESULTS

Description of EUT

The calibrated radiated DFS detection threshold level is set to -64 dBm.

Radar Waveform Calibration

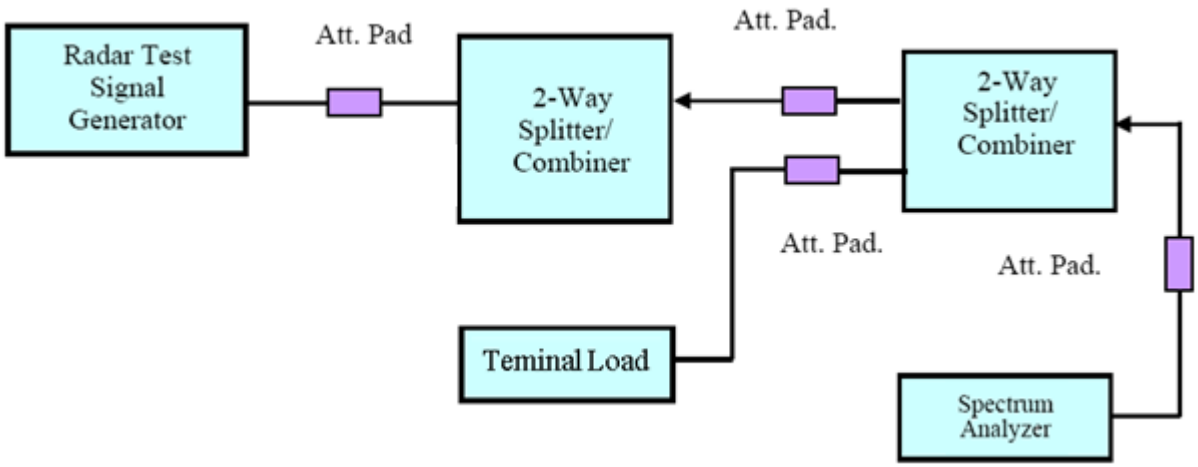

Test Data

Environmental Conditions

Temperature:	25 °C
Relative Humidity:	45 %
ATM Pressure:	101.1 kPa

The testing was performed by Elara Yang on 2026-06-18.

EUT operation mode: Transmitting

Test Result: Compliant

Please refer to the Appendix.

CHANNEL MOVE TIME AND CHANNEL CLOSING TRANSMISSION TIME

Test Procedure

Channel Move Time and the Channel Closing Transmission Time should be performed with Radar Type 0. The measurement timing begins at the end of the Radar Type 0 burst.

The Channel Closing Transmission Time is comprised of 200 milliseconds starting at the beginning of the Channel Move Time plus any additional intermittent control signals required to facilitate a Channel move (an aggregate of 60 milliseconds) during the remainder of the 10 second period. The aggregate duration of control signals will not count quiet periods in between transmissions.

The aggregate channel closing transmission time is calculated as follows:

Aggregate Transmission Time = N*Dwell Time

N is the number of spectrum analyzer bins showing a device transmission Dwell Time is the dwell time per bin (i.e. Dwell Time = S/B, S is the sweep time and B is the number of bin, i.e. 8192)

Test Data

Environmental Conditions

Temperature:	25 °C
Relative Humidity:	45 %
ATM Pressure:	101.1 kPa

The testing was performed by Elara Yang on 2026-06-18.

EUT operation mode: Transmitting

Test Result: Compliant

Please refer to the Appendix.

NON-OCCUPANCY PERIOD

Test Procedure

Measure the EUT for more than 30 minutes following the channel close/move time to very that the EUT does not resume any transmissions on this channel. Provide one plot to demonstrate no transmission on the channel for the non-occupancy period (30 minutes observation time)

Test Data

Environmental Conditions

Temperature:	25 °C
Relative Humidity:	45 %
ATM Pressure:	101.1 kPa

The testing was performed by Elara Yang on 2026-06-18.

EUT operation mode: Transmitting

Test Result: Compliant

Please refer to the Appendix.

EUT PHOTOGRAPHS

Please refer to the attachment 2601P38592E-RF-EXP External photo and 2601P38592E-RF-INP Internal photo.

TEST SETUP PHOTOGRAPHS

Please refer to the attachment 2601P38592E-RF-TSPB Test Setup photo.

APPENDIX

Appendix A: DFS Detection Thresholds

Test Result

Test Mode	Channel	Radar Type	Result [dBm]
20M	5260	Type0	-60.22
	5500	Type0	-59.78
40M	5270	Type0	-60.03
	5510	Type0	-60.13

Test Graphs

20M_5260_Type0

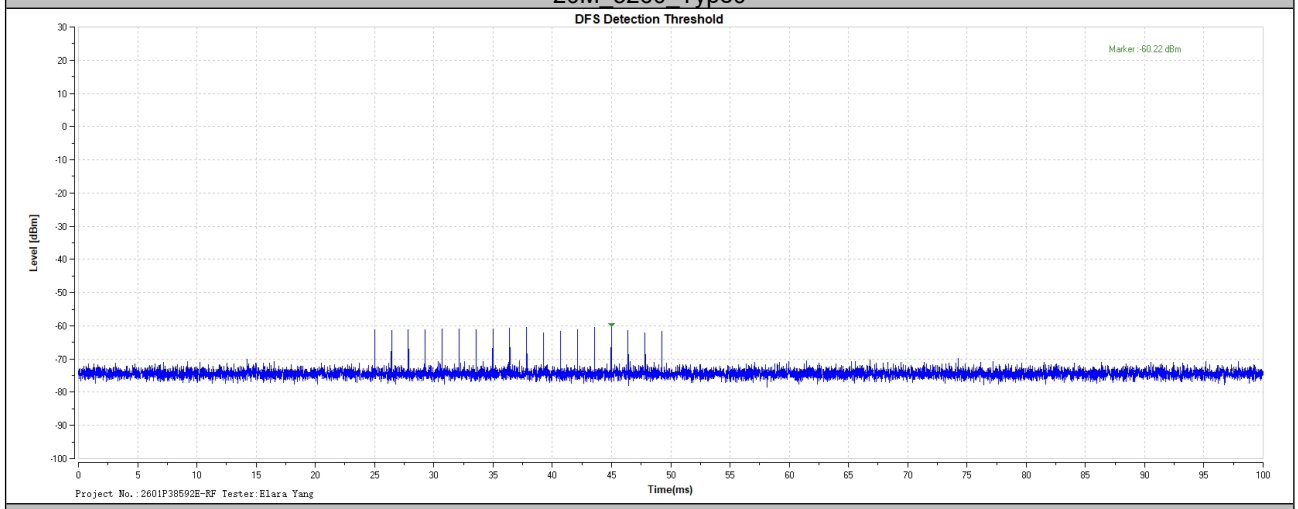

20M_5500_Type0

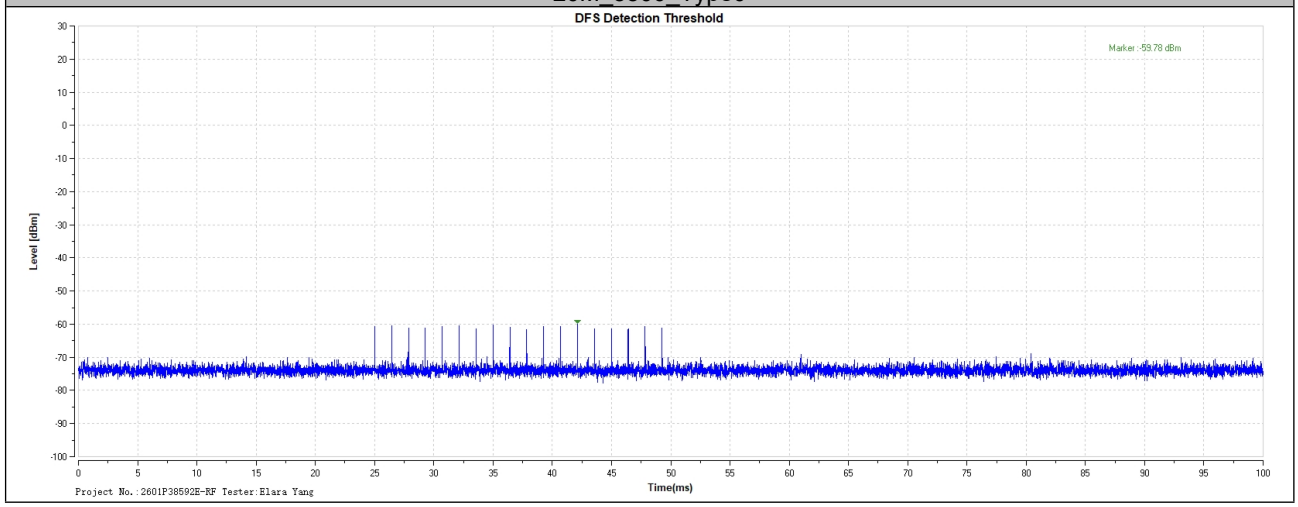

40M_5270_Type0

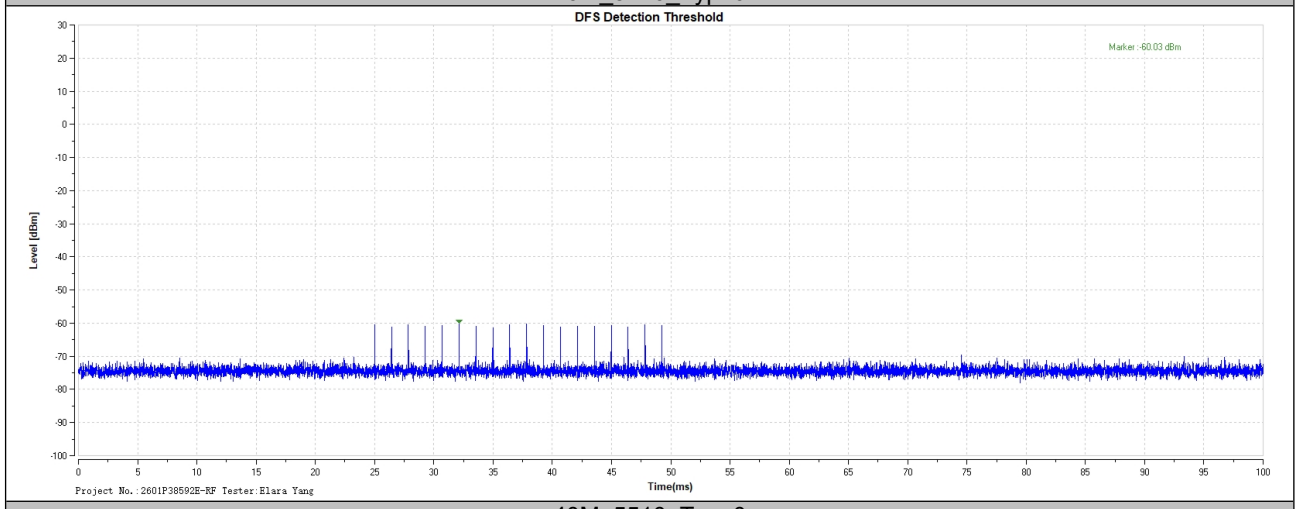

40M_5510_Type0

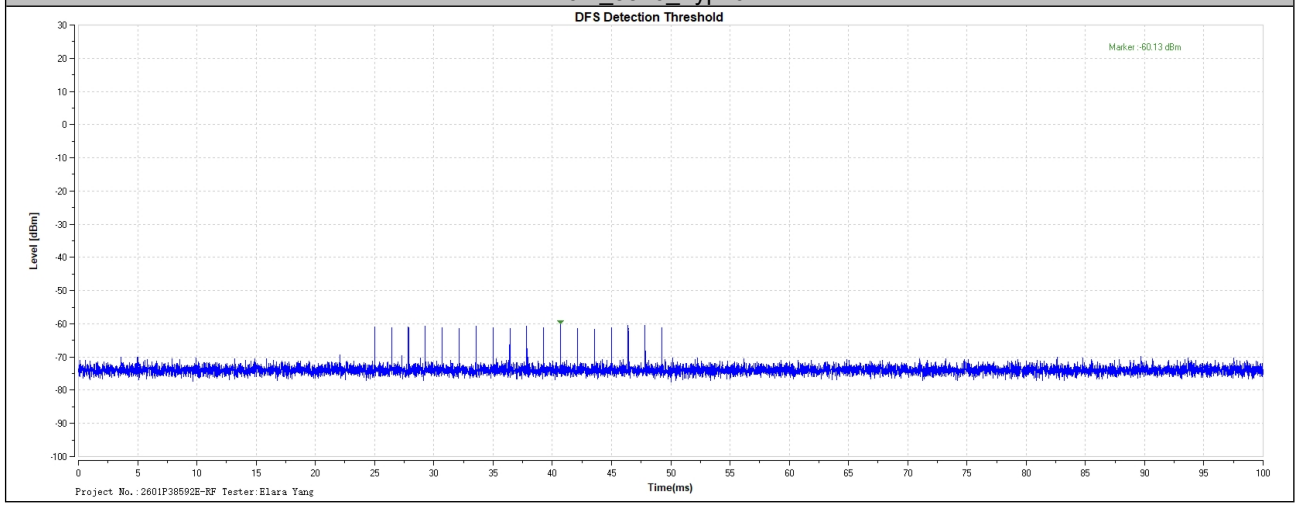

Appendix B: Channel Move Time and Channel Closing Transmission Time

Test Result

Test Mode	Channel	CCT[ms]	Limit[ms]	CMT[ms]	Limit[ms]	Verdict
11AX20SISO	5260	200+6.5	200+60	616.2	10000	PASS
	5500	200+6.5	200+60	650	10000	PASS
11AX40SISO	5270	200+5.2	200+60	611	10000	PASS
	5510	200+5.2	200+60	581.1	10000	PASS

Test Graphs

11AX20SISO_5260

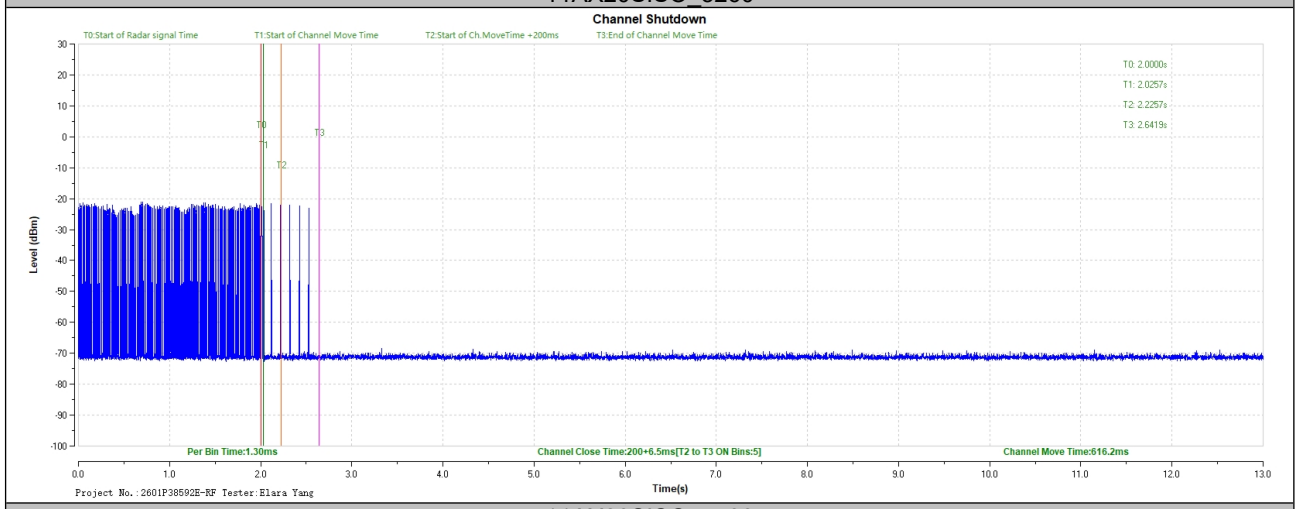

11AX20SISO_5500

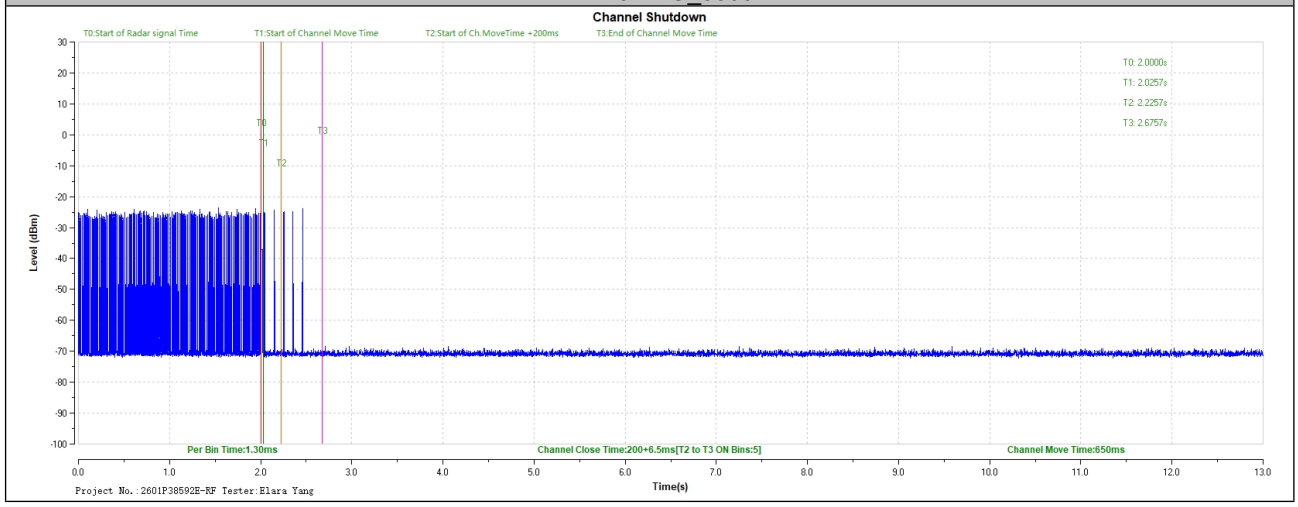

11AX40SISO_5270

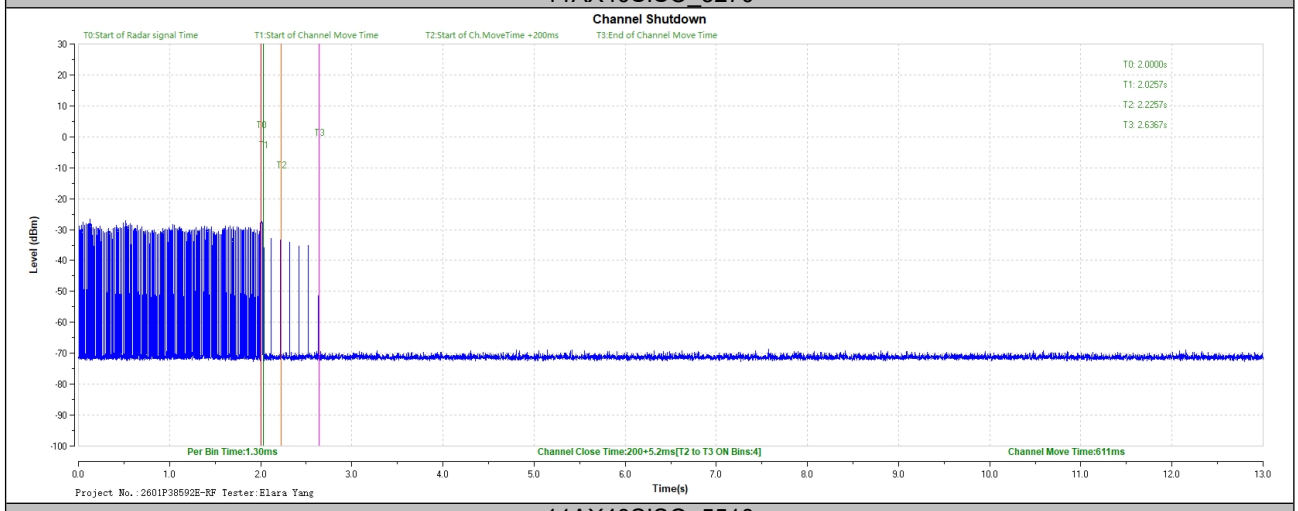

11AX40SISO_5510

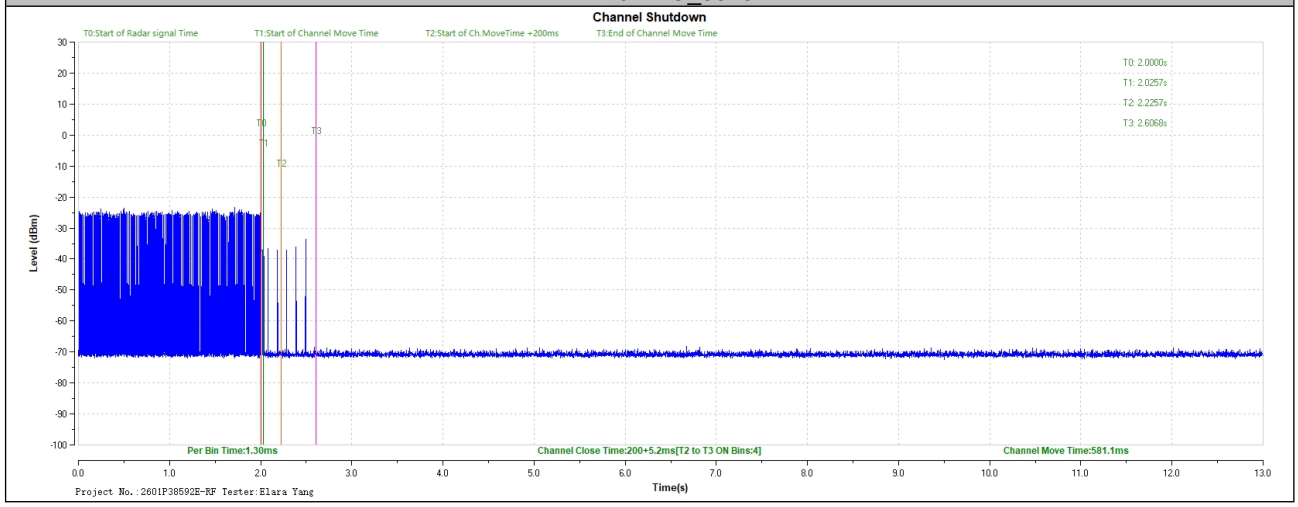

Appendix C: Non-Occupancy Period

Test Result

Test Mode	Channel	Result	Limit[s]	Verdict
11AX20SISO	5260	see test graph	≥1800	PASS
	5500	see test graph	≥1800	PASS
11AX40SISO	5270	see test graph	≥1800	PASS
	5510	see test graph	≥1800	PASS

Test Graphs

11AX20SISO_5260

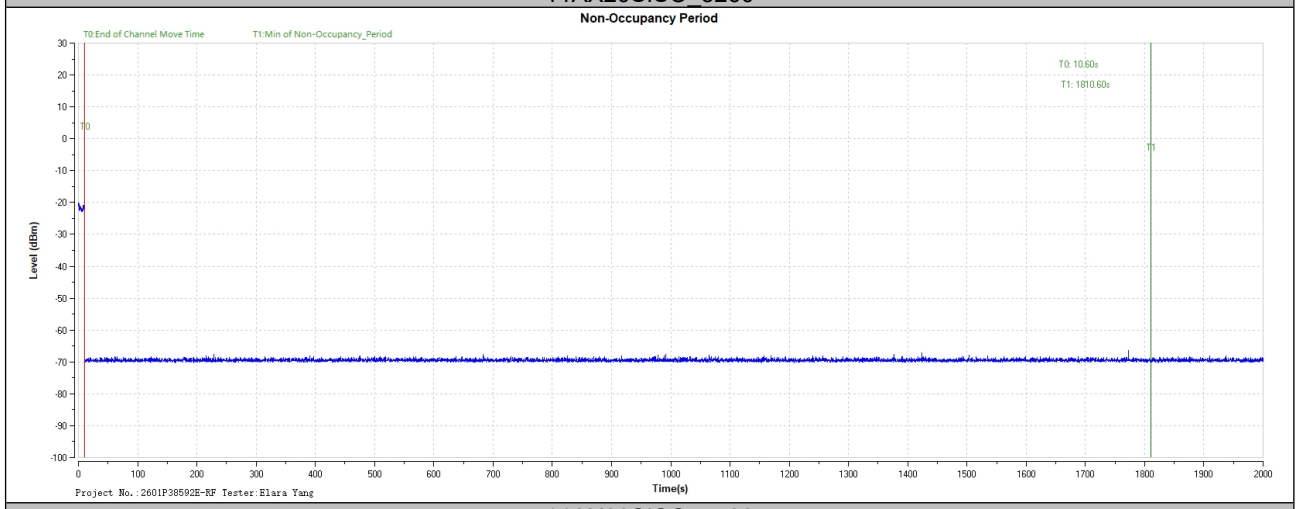

11AX20SISO_5500

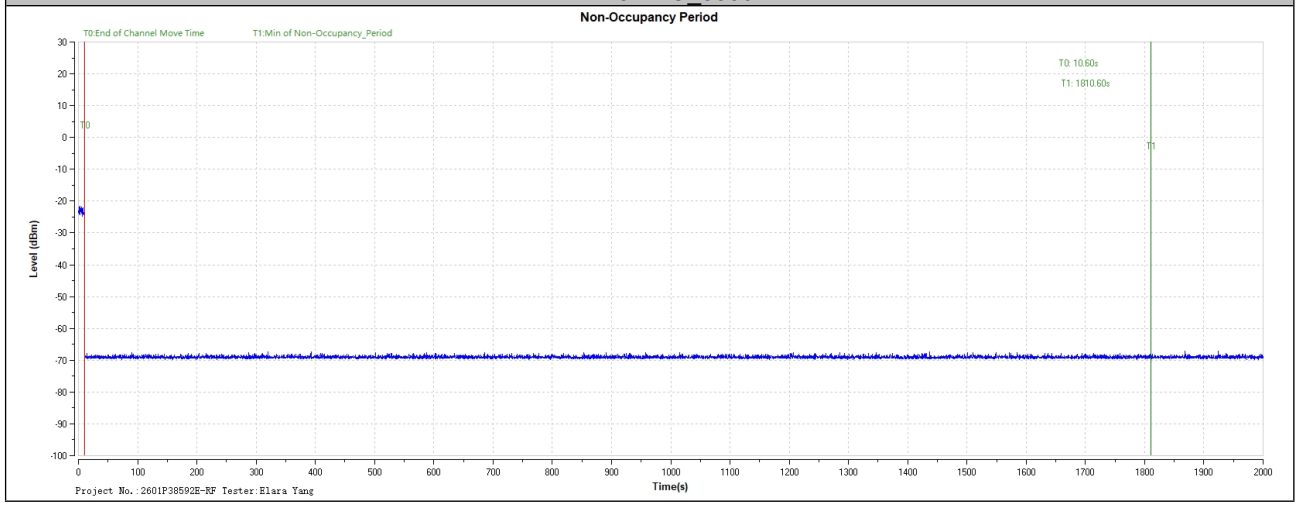

11AX40SISO_5270

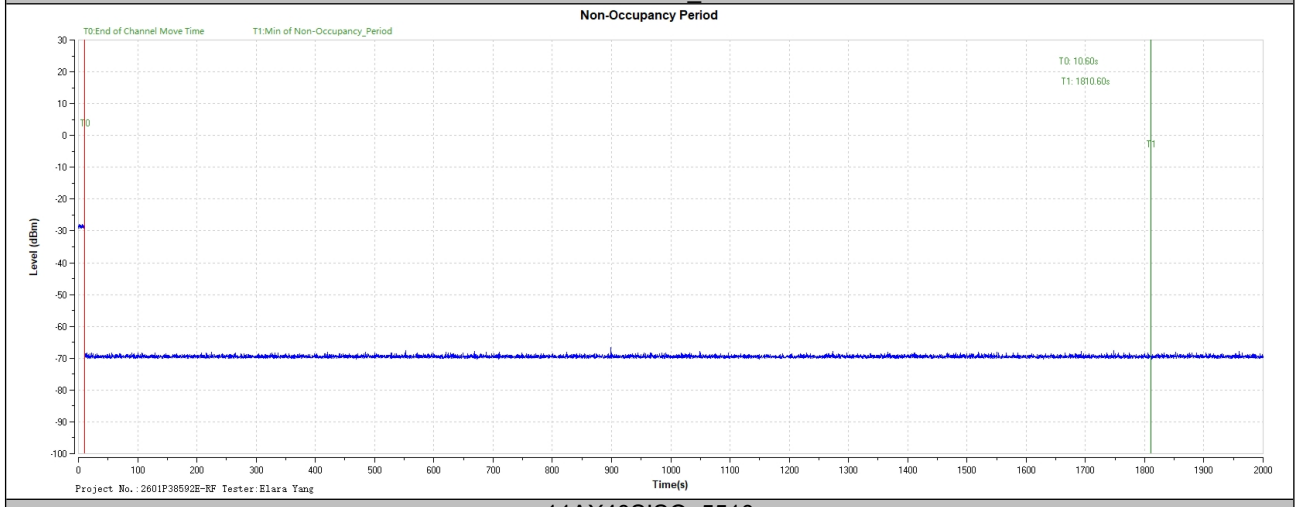

11AX40SISO_5510

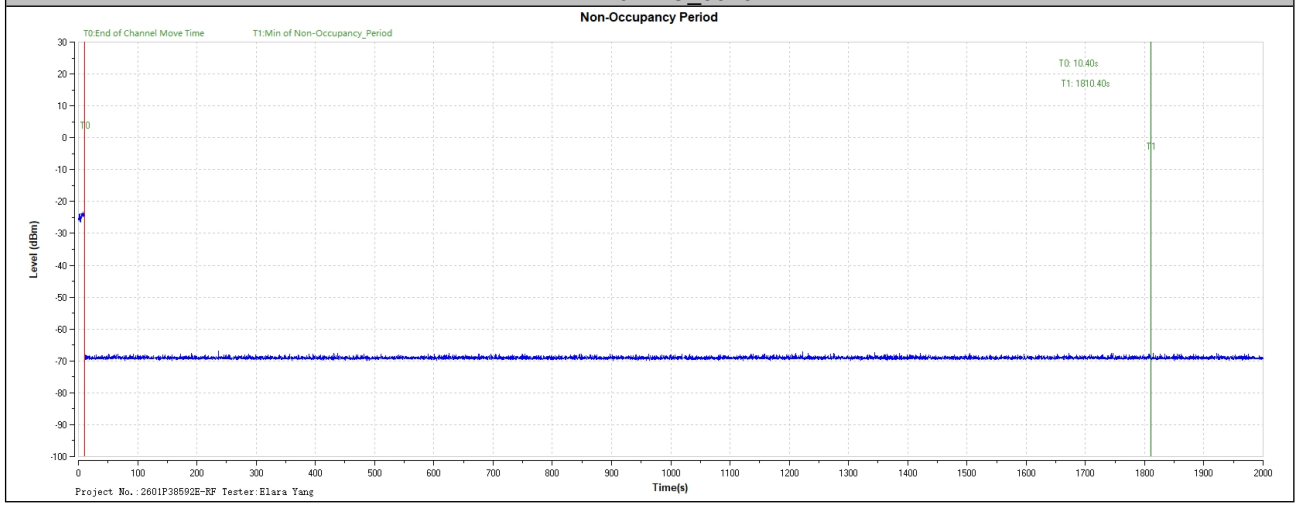

******* END OF REPORT *******