# Strada PAL

## Operation manual

Brand name: STRADA
Model name: StradaPAL

Ref.504022254_1

www.parkeon.com

PARKEON
Solutions for Smart Cities

# Table of Contents

1. ABOUT THIS DOCUMENT ..... 4
2. SECURITY ..... 5
3. PRESENTATION OF THE EQUIPMENT ..... 8
3.1 GENERAL PRESENTATION ..... 8
3.2 TERMINAL DIMENSIONS AND WEIGHT ..... 9
3.3 PRESENTATION OF THE USER INTERFACE ..... 11
3.4 PRESENTATION OF THE RAPIDE COLLECTION COMPARTMENT ..... 14
3.5 PRESENTATION OF THE BANKNOTE READER COLLECTION COMPARTMENT ..... 15
3.6 PRESENTATION OF THE TRANSFER COLLECTION COMPARTMENT ..... 16
4. PRESENTATION AND ACCESS TO THE OPERATING / MAINTENANCE MENU ..... 19
4.1 SALES MODE ..... 19
4.2 OFF-SALES MODE ..... 19
4.3 ACCESSING THE OPERATING / MAINTENANCE MENU ..... 20
4.4 NAVIGATING THE OPERATING / MAINTENANCE MENU ..... 21
4.5 NAVIGATING THE REDUCED OPERATING / MAINTENANCE MENU ..... 21
4.6 TICKETS ..... 22
5. TOOLS AND CONSUMABLE ..... 23
6. PRELIMINARY OPERATIONS ..... 25
6.1 OPENING / CLOSING THE MAINTENANCE DOOR WITH A MECHANICAL LOCK ..... 25
6.2 OPENING / CLOSING THE MAINTENANCE DOOR WITH A MECHANICAL LOCK ..... 26
6.3 OPENING / CLOSING THE TRAPDOOR OF THE FLOOR FIXATION COMPARTMENT ..... 29
6.4 POWERING OFF / UP THE EQUIPMENT ..... 31
6.5 OPENING / CLOSING THE TRANSFER COLLECTION DOOR ..... 32
6.6 REMOVING THE COLLECTION KEY FROM THE SLIDE (TRANSFER CASSETTE) ..... 33
6.7 REMOVING THE COLLECTION KEY FROM THE SLIDE (COLLECTION TROLLEY) ..... 33
6.8 PREPARING THE TRANSFER CASSETTE ..... 35
6.9 PREPARING A COIN BOX ..... 36
6.10 PREPARING A BATTERY ..... 37
7. ELECTRONIC MONEY PROCEDURES ..... 38
7.1 ORGANISATION AND SECURITY ..... 38
7.2 COLLECTION BY TRANSFER CASSETTE (WITHOUT TROLLEY) ..... 38
7.3 COLLECTION BY TRANSFER CASSETTE (WITH TROLLEY) ..... 41
7.5 EMPTYING A TRANSFER CASSETTE ..... 44
7.6 EMPTYING A TROLLEY ..... 45
7.7 STORING THE COIN BOX ..... 45
7.8 COLLECTING THE COIN BOX ..... 46
7.9 EMPTYING A COIN BOX (COINS ONLY COLLECTION) ..... 50
7.10 LUBRICATING THE EXCHANGEABLE COIN BOX ..... 51
7.11 EMPTYING THE COIN BOX (WITH BANKNOTE COLLECTION) ..... 51
7.12 COLLECTING THE BANKNOTE STACKER ..... 52

7.14 EMPTYING THE BANKNOTE STACKER ..... 56
**8. SERVICE OPERATIONS ..... 57**
8.1 REPLACING THE TICKET ROLL ..... 57
8.2 BASIC FUNCTIONS ..... 59
8.3 CORRECTING PAPER JAMS IN THE PRINTER ..... 61
8.4 CHECKING THE BATTERIES VOLTAGE ..... 62
8.5 RECOMMENDATIONS FOR THE BATTERIES ..... 63
8.6 REPLACING THE BATTERIES ..... 64
8.7 CLEANING ..... 66
**9. WARNINGS AND FAILURES ..... 67**
9.1 GREEN WARNING LED ..... 67
9.2 RED FAILURE LED ..... 68
9.3 EXCHANGEABLE COIN BOX FAILURE CODE ..... 70

# 1. About this document

This document is intended to:

- service personnel in charge of general operation procedures,
- personnel in charge of collection and any other operation in connection with electronic money.

This document gives information and advice to properly use and collect the terminal.

These instructions are applicable to the procedures in use on this document release date. Information and visuals in this document are subject to change. Refer to your Parkeon contacts to check the validity of your document.

Visuals may not be exactly identical to the screen of the terminal used; the screens used in this document are examples.

Guarantee on Parkeon equipment and software is only available if the transport, storage, installation, operation, and maintenance conditions defined in the installation, user, and maintenance guides have been respected.

Parkeon shall not be liable in the event of any changes or incorrect use of the machine other than as described in this document.

- Refer to the maintenance guide for information on troubleshooting or component replacement.

# 2. Security

Parkeon products are designed to limit the risks for customers and operators with regard to power sources, high temperatures, fires, mechanics, radiations, or chemicals.

This product is compliant to the whole of the European Parliament of the CE marking (see below) and to the following directives:

- **Directive 2013/35/UE** of the European Parliament and of the Council of 26 June 2013 on the minimum health and safety requirements regarding the exposure of workers to the risks arising from physical agents.

Follow the basic precautions below for the safety of personnel and the environment. The list is not comprehensive and is only aimed at drawing your attention to the potential risks of poorly performed work and negligence:

- Any work on the product may only be performed by appropriately trained personnel. Only correctly trained persons may work on the mains power supply.
- Wear personal protective equipment appropriate for the type of work required.
- Use tools that are appropriate and in good condition, and respect the purpose for which they were conceived.
- Mark out the anchoring system in the street while the concrete is drying in order to inform others of the risk of obstruction. The signalling must comply with local rules. Below is an example of signalling:

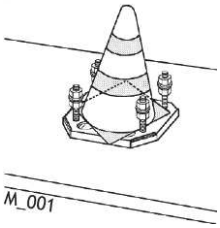


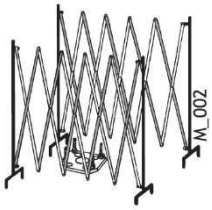


### CE marking - Europe

This product complies with the rules for CE marking. The applicable directives depend on the presence of the radio communication option:

- With the radio communication option (GPRS, Wi-Fi, short-range device, …)

  The product complies with the following directives:

  - **Directive 2014/53/EU** of the European Parliament and of the Council of 16 April 2014 on the harmonisation of the law of the Member States relating to the making available on the market of radio equipment and repealing Directive 1999/5/EC
  - **Council Recommendation 1999/519/EC** of 12 July 1999 on the limitation of exposure of the general public to electromagnetic fields (0 Hz to 300 GHz)
- Without the GPRS option

  The product complies with the following standards:

  - **Directive 2014/35/EU** of the European Parliament and of the Council on the harmonisation of the laws of Member States relating to electrical equipment designed for use within certain voltage limits
  - **Directive 2014/30/EU** of the European Parliament and of the Council on the approximation of the laws of the Member States relating to electromagnetic compatibility

### Canada

The product is compliant with the following requirements:

- RSS-Gen – General Requirements for Compliance of Radiocommunication equipments.
- NMB-003 Information technology equipment, including digital equipments - Limits and methods of measurement.

**United States of America**

This product is compliant with:

- The National Electrical Code
- The Americans with Disabilities Act (ADA)
- The Federal Communication Commission (FCC) rules part 15

Federal Communications Commission FCC Compliance Statement

This device complies with FCC's radiation exposure limits set forth for an uncontrolled environment under the following conditions :

1. This device should be installed and operated such that a minimum separation distance of 20cm is maintained between the radiator (antenna) and user's/nearby person's body at all times.
2. This transmitter must not be co-located or operating in conjunction with any other antenna or transmitter.

This device has been tested and found to comply with the limits for a Class B digital device, pursuant to part 15 of the FCC Rules. These limits are designed to provide reasonable protection against harmful interference in a residential installation. This device generates, uses and can radiate radio frequency energy and, if not installed and used in accordance with the instructions, may cause harmful interference to radio communications. However, there is no guarantee that interference will not occur in a particular installation. If this device does cause harmful interference to radio or television reception, which can be determined by turning the device off and on, the user is encouraged to try to correct the interference by one or more of the following measures :

- Reorient or relocate the receiving antenna.
- Increase the separation between the device and receiver.
- Connect the device into an outlet on a circuit different from that to which the receiver is connected.
- Consult the dealer or an experienced radio/TV technician for help

Any changes or modifications to this equipment not expressly approved by Parkeon may cause, harmful interference and void the FCC authorization to operate this equipment.

**Electricity**

- All product-servicing operations require appropriate training.
- Only adequately trained personnel may work on the mains power supply.
- Protect personnel from electrical shocks with the help of appropriate electrical and earth connections.
- Always switch off the power before beginning some repairs, as instructed in this manual.
- Make sure that the electrical parts are installed in accordance with national standards.
- Keep the mains power supply disconnected throughout these operations. Protect the electrical wires from the rain. Never work on products connected to the mains or the telephone network during stormy weather.
- While repairing a circuit breaker installed on a machine, the main circuit breaker located in the technical unit must be switched off and marked with **maintenance information** so as to protect the agent from electric shocks.
- Isolate the mains power supply with the circuit breaker and switch off the low-voltage power with the On/Off button on the main board.
- Make sure that the earth cable is in good condition.
- Follow the instructions relating to the earth connections of product components in order to ensure compliance with EMC immunity and emissions standards.
- The earth conductor that protects the power cord must be yellow and green.
- Section of mains delivery cable: from minimum 1.5mm² to maximum 2.5mm2 (AWG12)
- Depending on the country of installation, the device may be connected to a 230V single-phase IT network.
- Ask for a signed certificate from the contractor.
- For terminals installed outside and mains powered, some transient currents could occur. In conformity with IEC61643 standard, customers must install surges arresters in order to prevent this transient on their main circuit breaker.

### Mechanical parts

- Always remove metal jewelry (rings, bracelets, bangles or wristwatches) before starting to work on electrical parts (power supply, battery or wiring) or on moving parts or parts located close to moving parts.
- Keep your hands away from moving and sharp parts, door hinges and locks, wheels and blades.
- Take care not to hurt yourself with the open door or any other projecting parts or parts fixed on the terminal.

### Temperature

- Always wait for a few minutes after turning the TVM off before you start working close to hot areas of the intermittent heating devices.

### Dry cells / Batteries

- Always comply with the polarity of batteries and cells.
- Do not obstruct the operating of the lithium cell of the main board. Explosion hazard.
- Never throw away, burn or open the buffer batteries or cells. Use the appropriate procedures as recommended by the competent health and safety authorities. These elements must be disposed of in accordance with local regulations.

**IMPORTANT**: Parkeon shall not be liable for any modifications made to the terminal or if it used other than as described in this manual.

### Environment

The product complies with the following directives and regulations:

- **Directive 2011/65/EU** of the European Parliament and of the Council of 8 June 2011 on the restriction of the use of certain hazardous substances in electrical and electronic equipment (ROHS).
- **Directive 2012/19/EU** of the European Parliament and of the Council of 4 July 2012 on waste electrical and electronic equipment (WEEE).
- **Directive 2006/66/CE** of the European Parliament and of the Council of 06 September 2006 on batteries and accumulators and waste of batteries and accumulators.
- **(CE) Regulation n°1907/2006 of the** European Parliament and of the Council of 18 December 2006 concerning the registration, evaluation and authorization of chemicals substances, as well as the restrictions applicable to these ( REACH) substances, establishing a European Chemicals Agency.

### Disposal of waste equipment

The presence of this symbol on a product or its packaging means that it may not be disposed of with ordinary waste.

Products marked with this symbol require special treatment in accordance with European Directive 2012/19 on waste electrical and electronic equipment.

# 3. Presentation of the equipment

## 3.1 General presentation

The terminal is composed of 5 main zones:

- a 5W or 16.5 W solar top or antenna cover incorporating an antenna,
- a zone indicator (9cm or 18cm),
- a housing with a compartment dedicated to the user interface and maintenance,
- a quick collection compartment (Transfer, Rapide or Cashless),
- a floor fixation compartment.

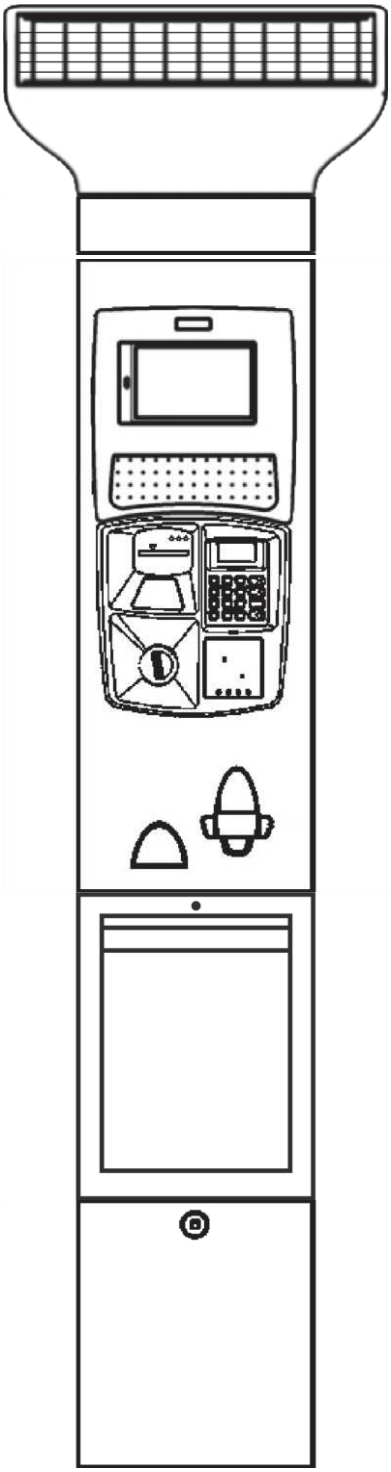

**General description**

## 3.2 Terminal dimensions and weight

The terminal has the following dimensions:

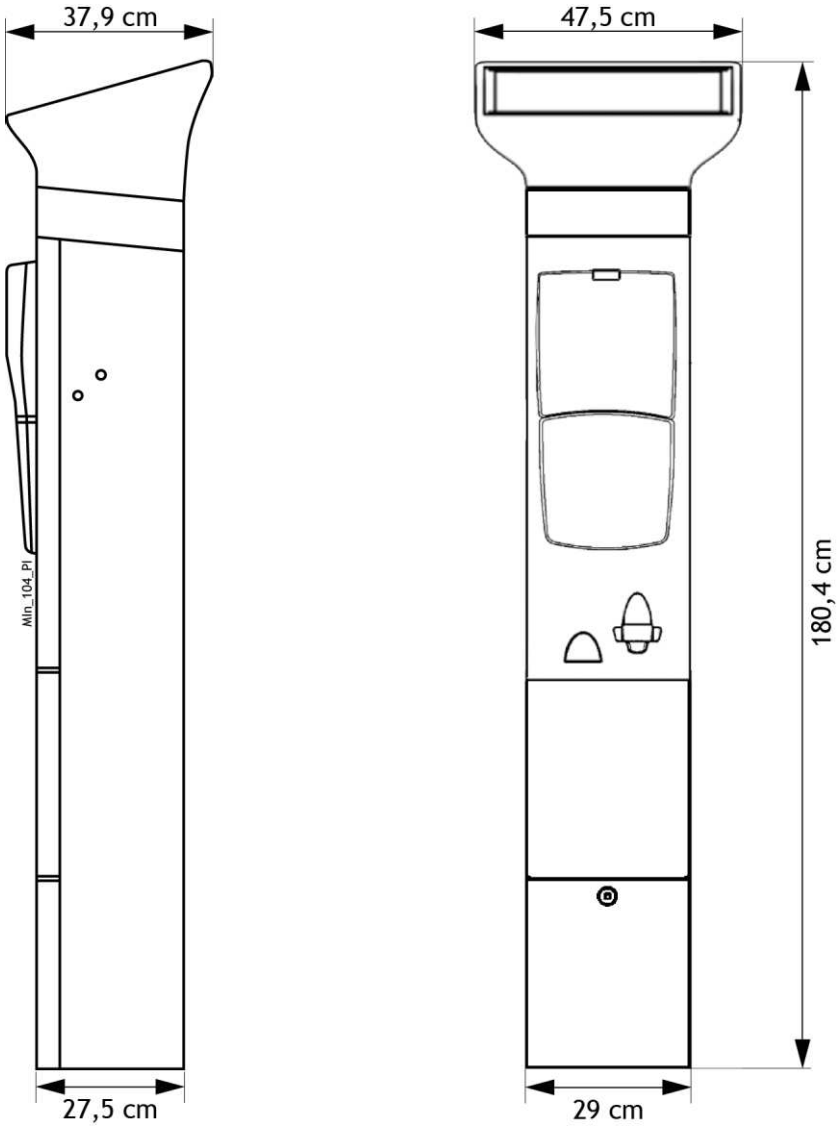

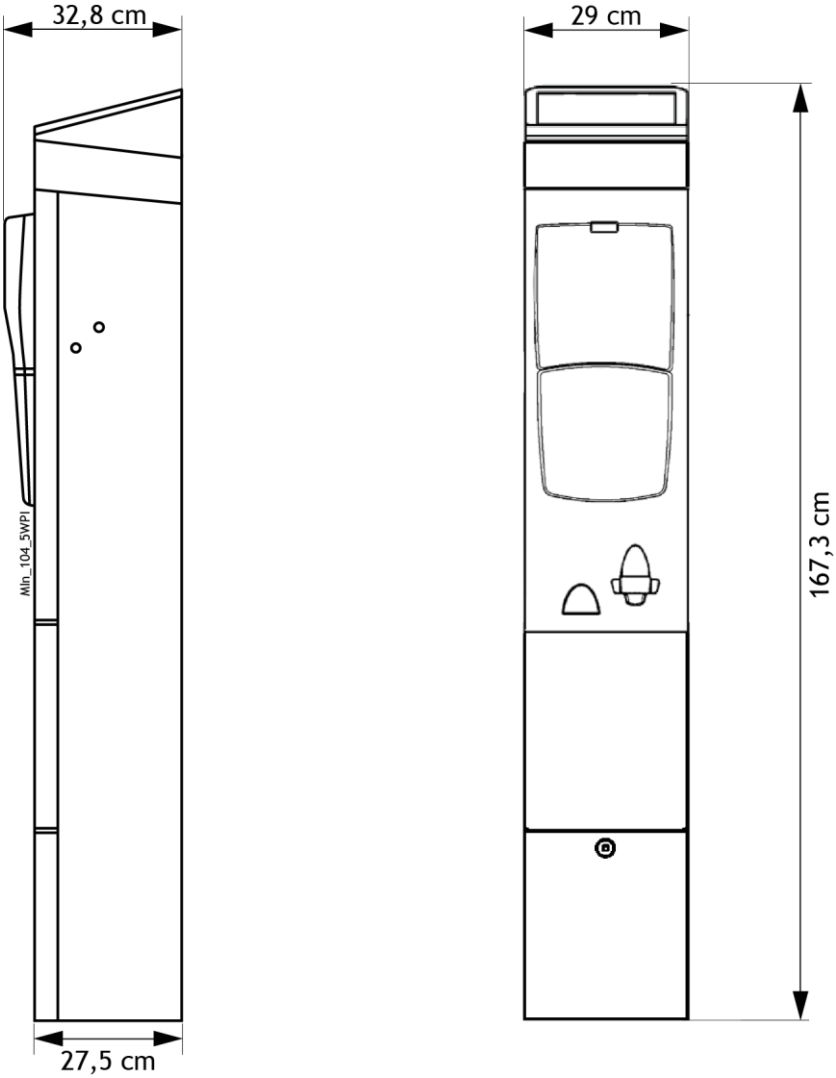


**External dimensions**

The terminal weighs about **90 kg** without the battery (the weight may differ depending on the options included).

## 3.3 Presentation of the user interface

The following elements are visible on the user interface (1):

- the colour screen 7" (2),
- the keyboard (7),
- the payment zone (3), with:
  - the payment card reader,
  - the numeric keypad,
  - the contactless antenna,
  - the coin slot,
- the coin bowl, (4),
- the ticket bowl (5) with banknote slot,
- the maintenance compartment lock (6).

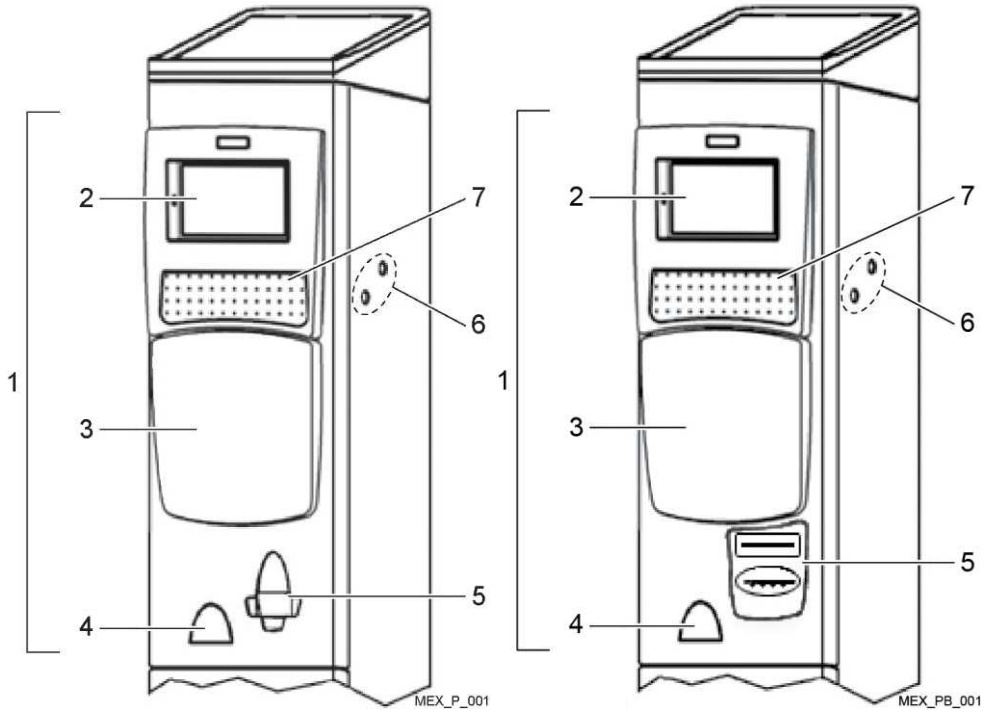


**External view**

With the extended keyboard option, the keys configuration depends on the customisation of the terminal.
In any case, the extended keyboard has a validation button (green) and a cancellation button (red).

**Examples of extended boards**

The following elements are visible on the maintenance door:

- the keyboard card (1),
- the screen (2),
- the numeric keypad,
- the contactless antenna (4) (not visible from the inside of the maintenance door),
- the coin slot(7),
- the position of the payment card slot (6),
- the coin bowl (8),
- the ticket slot with the key / lock collection interface (5) or the banknote slot and ticket slot (5).

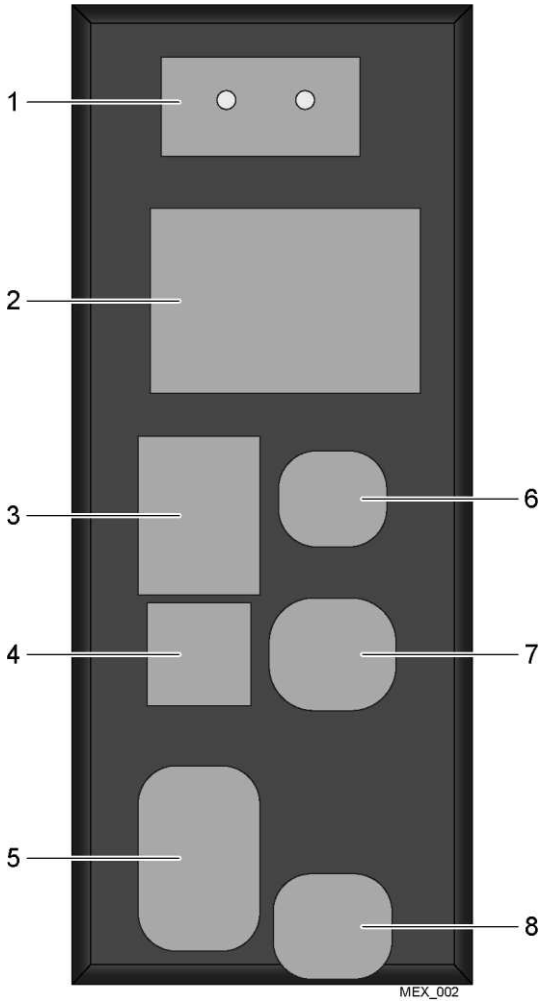


**Inside of the maintenance door**

The following elements are visible inside the maintenance compartment:

- the main board with the solar and modem charger board (1),
- the payment card reader (2),
- the selector (3),
- the escrow (4),
- the 12V / 27Ah battery with strand (7),
- the door open detection (8),
- the ticket stock (9),
- the printer (10),
- the banknote reader (11)

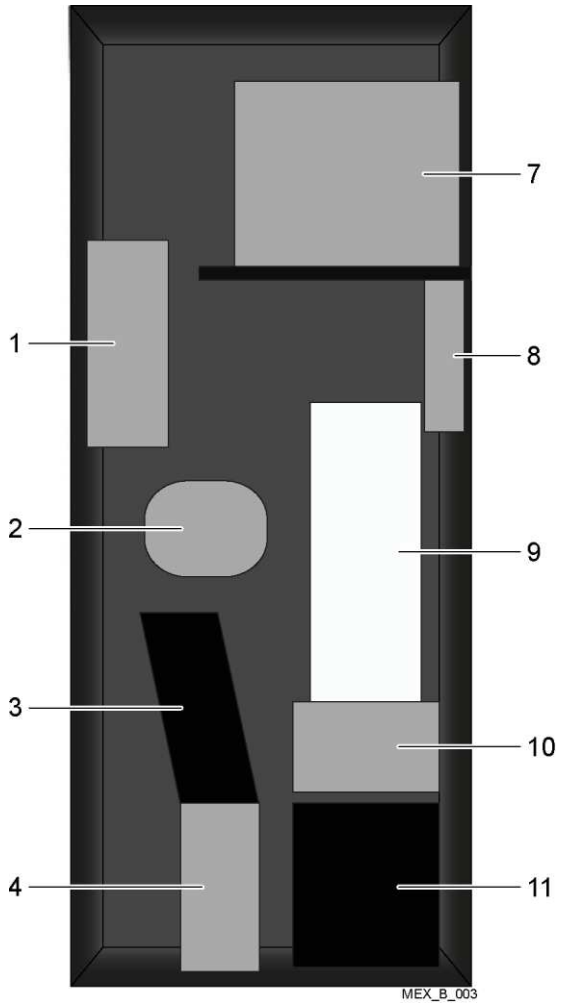


**Maintenance compartment**

## 3.4 Presentation of the Rapide collection compartment

The collection compartment is composed of a collection rack (3) equipped with a collection trapdoor (4) with removable coin box (1).

A collection light (2) is located on the collection rack and gives indications to the service and maintenance operators on the operation and collection.

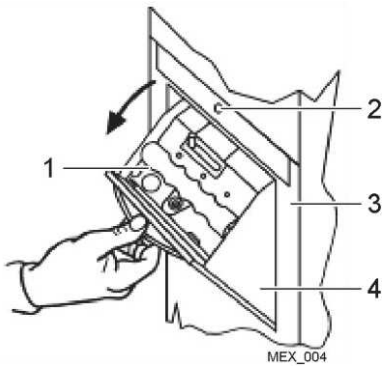


**Collection compartment**

The collection rack is equipped with an **electronic locking system** that runs the opening of the collection trapdoor.

The removable coin box:

- allows the storage of cashed coins,
- offers a high-security protection,
- weighs 1.6 kg when empty,
- has a 4.6 litre capacity,
- can hold approximately 2,700 Euro coins (weighs approximately 19.6 kg when full). The capacity and weight vary depending on the size of the coins.

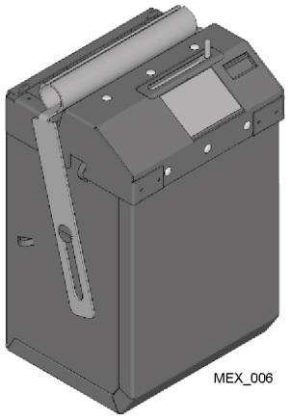


**Removable coin box**

## 3.5 Presentation of the Banknote reader collection compartment

The collection compartment is composed of a collection rack equipped with a collection trapdoor (2) with removable coin box (1) and banknote stacker (4).

A collection light (3) is located on the collection rack and gives indications to the service and maintenance operators on the operation and collection.

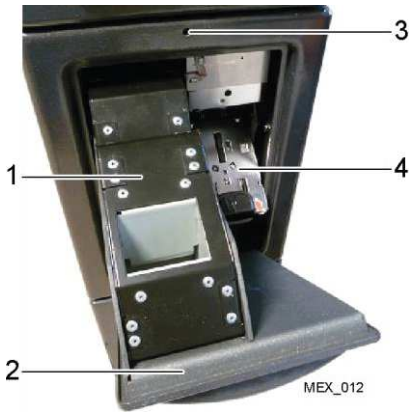


**Collection compartment**

The collection rack is equipped with an **electronic locking system** that runs the opening of the collection trapdoor.

The removable coin box:

- allows the storage of cashed coins,
- offers a high-security protection,
- weighs 2.7 kg when empty,
- has a 3.5 litre capacity,
- can hold approximately 2,000 Dollar coins (weighs approximately 14 kg when full). The capacity and weight vary depending on the size of the coins.

The removable banknote stacker:

- allows to store the cashed banknotes,
- offers a high-security protection,
- weighs between 1.1 and 1.4 kg when empty,
- can hold approximately 500 or 1,000 Dollar banknotes (the coin box weighs approximately 1.6 to 2.4 kg when full). The capacity and weight vary depending on the size of the banknotes.

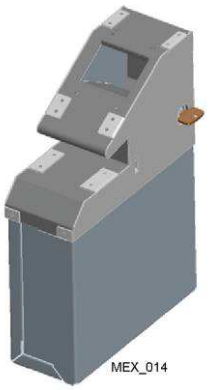


**Removable coin box**

**Removable banknote stacker**

## 3.6 Presentation of the Transfer collection compartment

The collection compartment includes:

- the collection door (1),
- the paper jam handle (2),
- the mechanical collection till equipped with a lock (3),
- the lock of the collection compartment (4),
- the built-in coin box (not visible from outside).

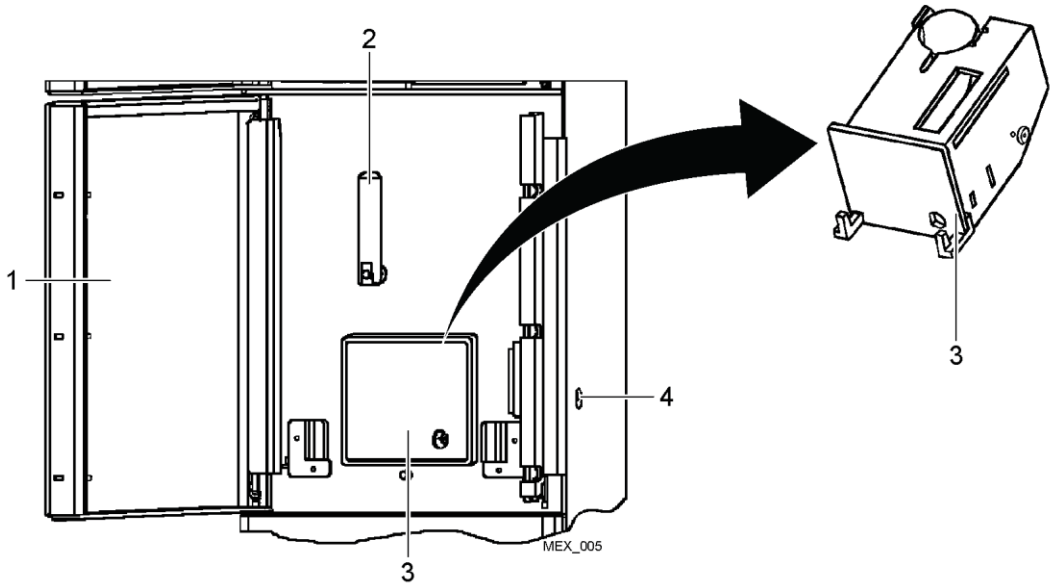


**Collection compartment**

The built-in coin box:

- allows the storage of cashed coins,
- has a 5.8 litre capacity,
- can hold approximately 2,000 2€ coins.

The transfer collection system offers a high level of security: the coins cannot be seen or accessed from outside.
To collect the coins, the operator must:

- install a transfer cassette or the head of a collection trolley on the supports,
- unlock the collection till with the collection key,
- slide the till to allow the transfer of the coins from the coin box to the cassette or the trolley.

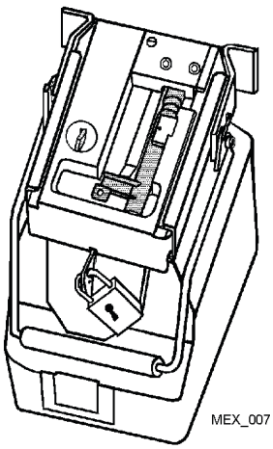


Transfer cassette

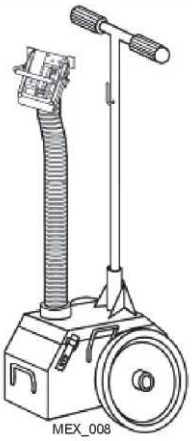


Collection trolley

Collection key

The transfer cassette and the collection trolley:

- allow the storage of transferred coins,
- contain the collection key that unlocks the till,
- are padlocked to ensure the safety of the collection,
- have a storage capacity of:
  - 5.8 litres for the transfer cassette,
  - approximately 17 litres for the collection trolley.

### 3.6.1 Presentation of the transfer cassette

The transfer cassette (8) includes:

- A "once" opening system (3) that enables activation of the cassette to collect the coins. The light is white (5) when the "once" system is ready.

  The "once" system can be locked with a padlock and / or sealing.
- A slide (1), with the collection key (7), locked in position by an introduction end stop (6). The collection key unlocks the collection till and enables it to slide on the cassette to transfer the coins. A locking lever (2) locks the slide in position on the transfer cassette.
- A ticket notch (4) to slip the collection ticket at the end of the collection.

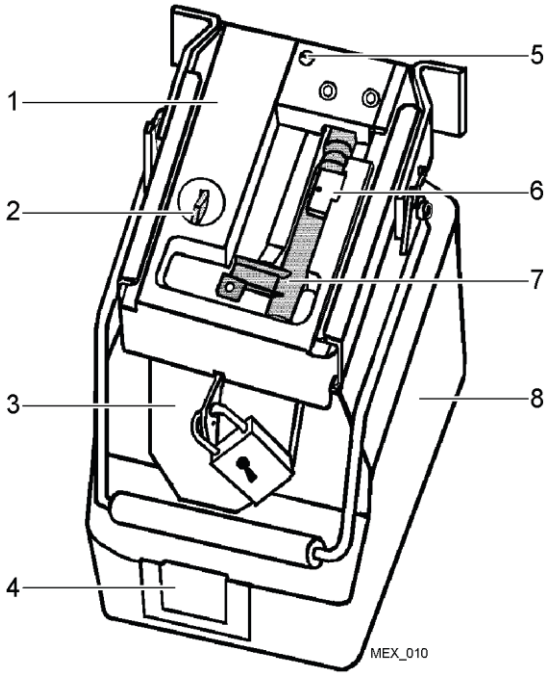


**Transfer cassette**

### 3.6.2 Presentation of the collection trolley

The collection trolley includes:

- A collection head (4) to allow transfer of the coins from the collection till of the terminal to the trolley through a pipe (5).

  The collection head is equipped with a slide (1) with the collection key (3) to unlock the collection till and slide it in the collection head to transfer the coins. A locking lever (2) locks the slide in position on the collection head.
- A trolley (6) equipped with a non-return system to securely store the coins. The trolley can be lock with padlocks in three locations.

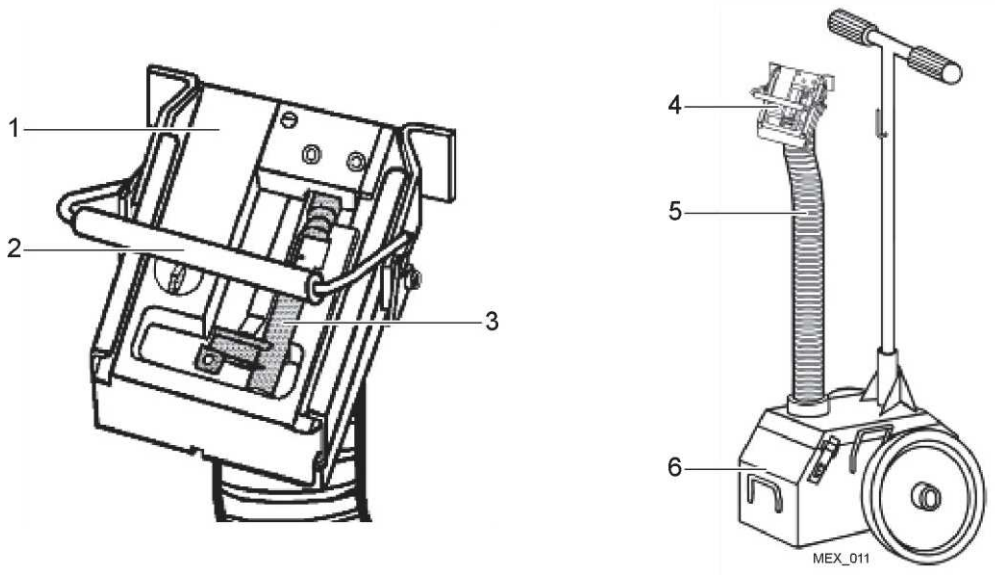


**Collection trolley**

The collection trolley does not have a "once" opening system.

Consequently, it is possible to use the trolley to collect several terminals one after the other.

# 4. Presentation and access to the operating / maintenance menu

## 4.1 Sales mode

In sales mode, the terminal displays a home screen that differs depending on the sales options and other functions (access to the parking mode as a visitor or other profile, access to the service mode, choice of user type, plate number entry, etc.).

The terminal enters the screen-saver mode:

- after 20 seconds of inactivity on the home screen (can be modified in the customisation),
- after 10 seconds of inactivity if no means of payment is entered,
- after 40 seconds of inactivity if no action is performed after a means of payment is entered.

## 4.2 Off-sales mode

In case of malfunction with a means of payment (for instance, coins payment unavailable because the coin box is full):

- if other means of payment are available, the terminal suggests them and stays in operation,
- if no means of payment is available, the terminal switches to off-sales mode and displays an unavailability message.

**Terminal in off-sales mode**

## 4.3 Accessing the operating / maintenance menu

A. Open the maintenance door.
B. Press the **Maintenance Mode** button (1) at the back of the display module.

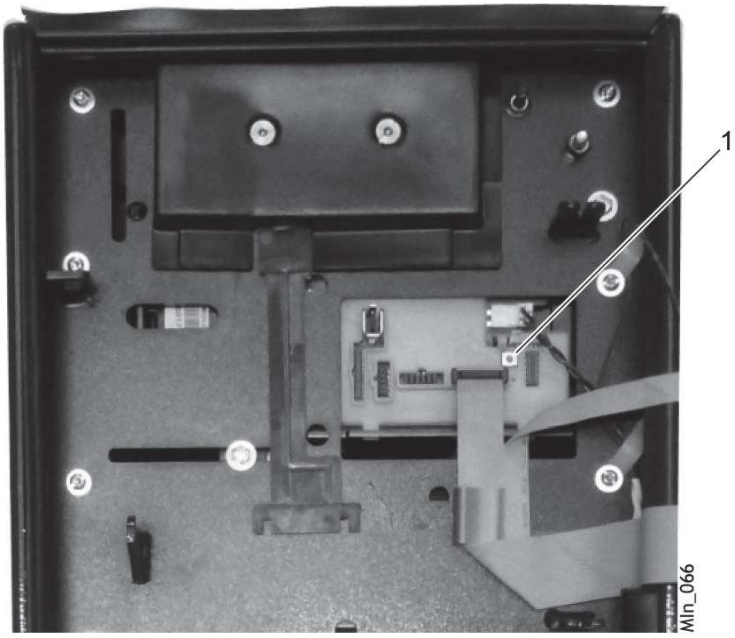


**Maintenance Mode button**

C. The terminal displays the complete main maintenance menu in the language selected when customising the terminal.

**Maintenance menu**

## 4.4 Navigating the operating / maintenance menu

Use the integrated keys of the extended keyboard to navigate the operating / maintenance menu.

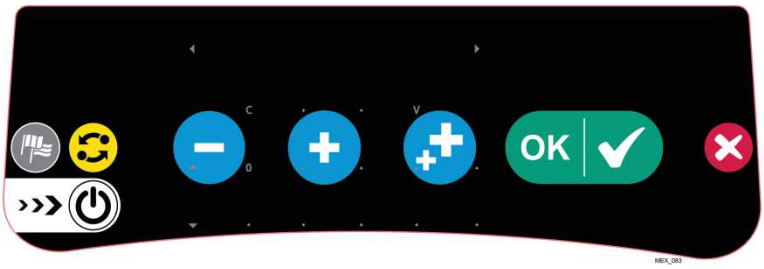


**Example of extended keyboard with integrated navigation keys**

- The left and right arrows are used to navigate horizontally through the menus as well as navigate in the menus with their numerical value (going from menu 001 to 002, 003, etc.).
- The up and down arrows are used to navigate vertically through the menus.
- The **C** key is used to go up one level in the menu structure (to exit the current menu) or to cancel a function.
- When the main menu is displayed, the **C** key is used to exit the maintenance mode.
- The **V** key is used to confirm a selection or an entry or to enter a menu.
- The numeric keys are used to enter a maintenance function code. The operator can then validate it with the **V** key.

  This method avoids browsing the maintenance menu when the operator knows the function code.
- The numeric keys are also used to enter numbers in the menus.

The maintenance function code is displayed on the top left of the screen, which allows the maintenance operator to memorise the codes of the most frequently used functions for a quicker access at subsequent interventions.

## 4.5 Navigating the reduced operating / maintenance menu

It is possible to use the reduced version of the maintenance menu without opening the maintenance door. It limits access to the maintenance compartment for a category of operators.

All the functions are then accessible with the door closed or open after introduction of a maintenance card (provided the card reader is configured to accept maintenance cards).

## 4.6 Tickets

### 4.6.1 Standard parking ticket

A parking ticket can be customised.

For instance, it can include the following information:

- the date,
- the hour of end of parking,
- the date of end of parking,
- the ticket price.

A resident ticket can also include the **RES** trigram.

### 4.6.2 Control ticket

A control ticket (or test ticket) can be printed using the programming keyboard (**T** button) or function **211**. It controls if the general operations are correct. It can indicate:

- the time and date,
- the word **TEST**,
- the parking terminal ID number,
- the last 20 warning or failure codes (customisable), if applicable.

### 4.6.3 Token ticket

A "token" ticket can be obtained with a test token. A test token is a fake coin used to test the transactions operations, especially the coins conduit and the printer.

When this operation is carried out correctly, the minimal and maximal payments are displayed on the screen and the terminal returns the test token and prints a control ticket with the word **TOKEN**.

### 4.6.4 After-sales ticket

An "after-sales" ticket can be delivered using a control card. It is used to test the transactions operations, especially the card reader and the printer.

### 4.6.5 Supply voltage ticket

A supply voltage ticket (accessible with programming function **95**) allows to print the battery voltages when idle and when in operation, as well as the mains voltages.

### 4.6.6 Management ticket (or "Statistics ticket")

Programming function **212** is accessible with the programming keyboard and allows to print a management ticket (or "statistics" ticket).
The management ticket can be customised (except in the case of "Transaction based").
It can include the following elements:

- the time and date of printing,
- information on the collections:
  - the sum of the last collections, regardless of the means of payment (*coins, card, or banknotes*),
  - the time, date, and reference numbers of the last collections.
- information on the parking counters:
  - the aggregated sum of all means of payment,
  - the aggregated number of tickets sold,
  - the aggregated number and sum of all transactions by user (*resident, etc.*).
- information on the other counters (non-exhaustive list):
  - cards recharging counters,
  - fines payment counters,
  - reimbursements counters,
  - security deposits counters,
  - "Free time" function counters.

# 5. Tools and consumable

The service operator must use the following tools and consumables:

- a standard toolbox with at least:
  - sets of screwdrivers (flat, Phillips, Torx),
  - a set of flat keys and sockets (8 to 24),
  - a set of hexagonal keys (Allen),
  - a ratchet,
  - a pair of cutting pliers,
  - a cutter knife.
- batteries,
- a paper roll,
- compressed air,
- a square key (ref: 135078),
- a brush,
- cable ties.

The collection operator must carry the following:

| | | |
|---|---|---|
| Rapide collection | an electronic key | 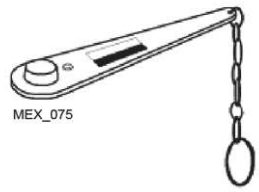  |
| | a removable coin box | 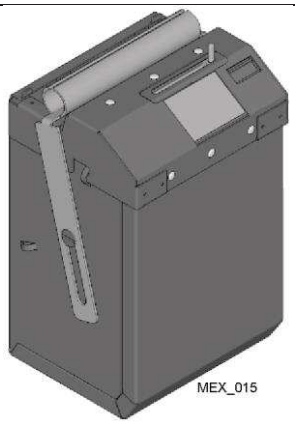  |
| | a coin box key | 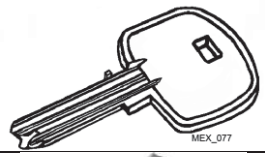  |
| | A removable coin box | 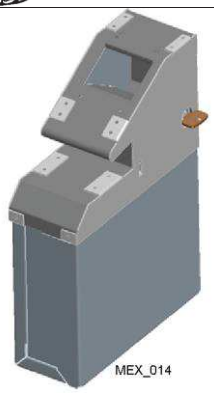  |

| | | |
|---|---|---|
| Banknote collection | A removable banknote stacker | |
| | A banknote stacker key | 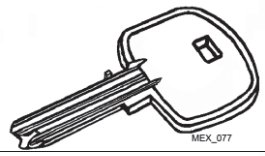  |
| | A coin box key | 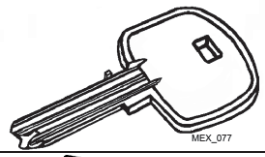  |
| Transfer Collection | a transfer cassette | 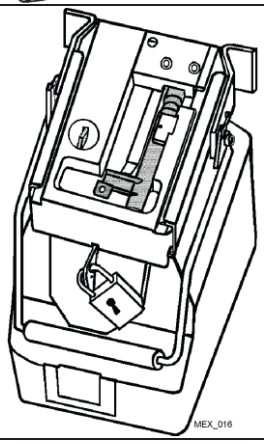  |
| | a collection trolley | 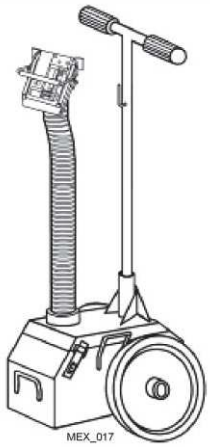  |
| | a collection key | 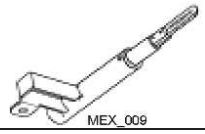  |
| | a coin box key | 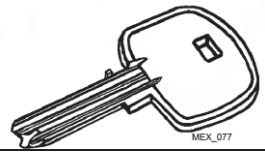  |

# 6. Preliminary operations

## 6.1 Opening / closing the maintenance door with a mechanical lock

### 6.1.1 Preliminary operations

A. Take the maintenance door mechanical key.

### 6.1.2 Procedure (normal mode)

#### *6.1.2.1 Opening the maintenance door*

The mechanical lock is equipped with protective flaps to reduce the risk of vandalism.

A. Insert the tip of the key in the opening of the lock (2).
B. With the tip of the key, push the first protective flap to the left (3) and the second flap to the right (4).
C. When the lock can be reached, insert the key (1).
D. Perform a quarter turn with the key to unlock the door.
E. Open the maintenance door.

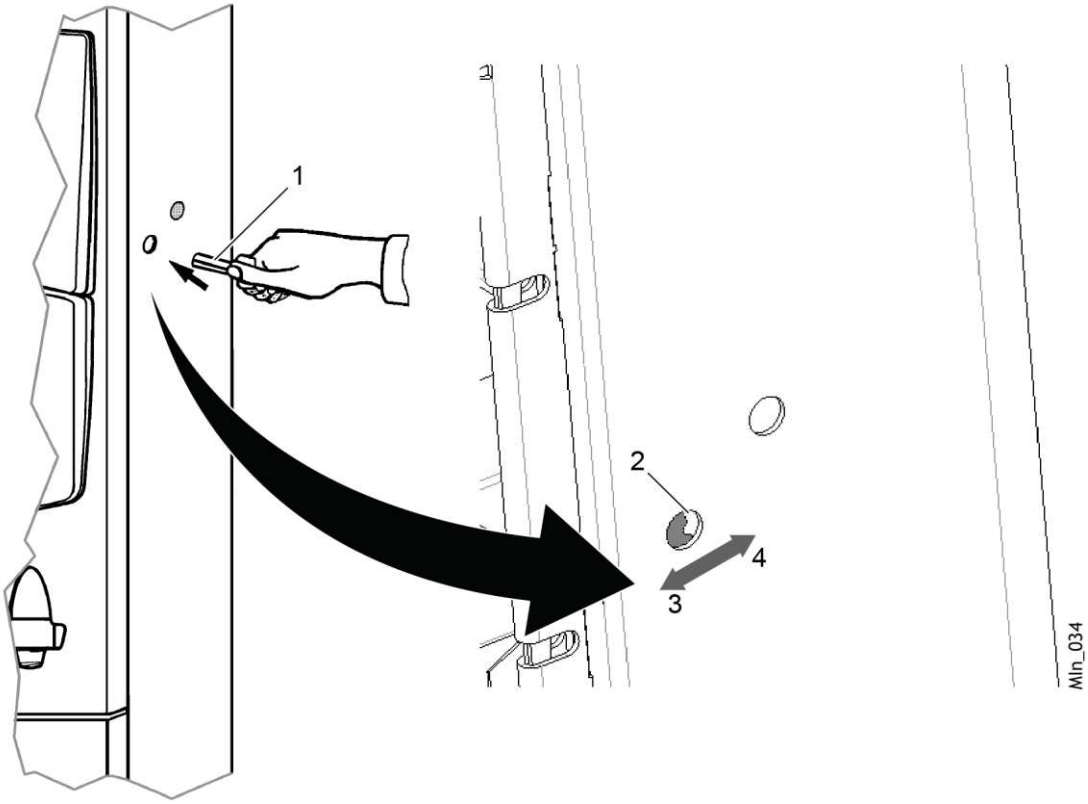


**Opening the maintenance door**

F. Put the maintenance card in the card slot.

When a maintenance card is detected, the terminal switches automatically to maintenance mode.

G. If the maintenance card requires the identification code, enter it and validate .
H. If necessary, enter the identification code with the user keypad and validate with the **V** key.

When the identification is successfully done, the maintenance menu ("reduced" version) is displayed on the screen.

I. To unlock the door, select the **Padlock command** function of the **Maintenance** menu (function **116**).

**Padlock command 116**

J. Remove the maintenance card from the reader.
K. Operate the bolts with the square key. Open the maintenance door and hold the bolts in raised position for a few seconds until the electronic lock actuator gets back in position (the operator hears a spring noise).

Holding the bolts in raised position with the square key for a few seconds after opening the door is necessary to avoid some technical issues associated with an incorrect repositioning of the electronic lock actuator.

#### *6.1.2.2 Closing the maintenance door*

A. Select the **Padlock command** function of the **Maintenance** menu (function **116**).

The terminal displays a message prompting maintenance door closing.

B. Close the maintenance door and operate the bolts with the square key.

When the terminal detects that the door is closed, it is automatically locked.

If the maintenance menu is activated, select the Cancel function to trigger the locking function and leave the maintenance menu.

## 6.2 Opening / closing the maintenance door with a mechanical lock

### 6.2.1 Preliminary operations

A. Take:
- the maintenance door mechanical key (degraded mode),
- the Parkeon door opening tool, to prevent damage to the housing or door paint,
- a square key,
- a maintenance card with adapted access rights.

### 6.2.2 Procedure (normal mode)

#### *6.2.2.1 Opening the maintenance door*

The electronic lock is equipped with protective flaps to reduce the risk of vandalism.

A. Insert the tip of the door opening tool (2) in the lock (3).
B. With the tip of the tool, push the first protective flap to the left (4) and the second flap to the right (5).
C. When the keyholes are reachable, insert the square key (1) in its slot.

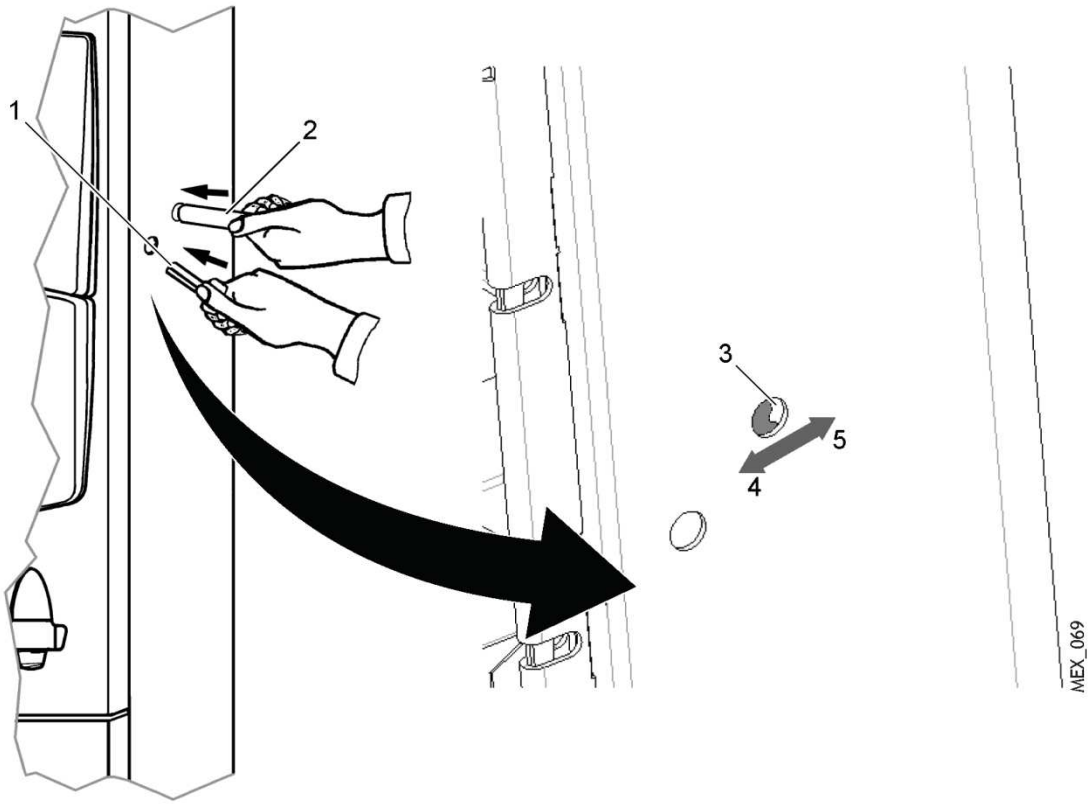


**Opening the maintenance door**

D. Put the maintenance card in the card slot.

When a maintenance card is detected, the terminal switches automatically to maintenance mode.

E. If the maintenance card requires the identification code, enter it and validate.
F. If necessary, enter the identification code with the user keypad and validate with the **V** key.

When the identification is successfully done, the maintenance menu ("reduced" version) is displayed on the screen.

G. To unlock the door, select the **Padlock command** function of the **Maintenance** menu (function **116**).

**Padlock command 116**

H. Remove the maintenance card from the reader.
I. Operate the bolts with the square key. Open the maintenance door and hold the bolts in raised position for a few seconds until the electronic lock actuator gets back in position (the operator hears a spring noise).

Holding the bolts in raised position with the square key for a few seconds after opening the door is necessary to avoid some technical issues associated with an incorrect repositioning of the electronic lock actuator.

#### *6.2.2.2 Closing the maintenance door*

A. Select the **Padlock command** function of the **Maintenance** menu (function **116**).

The terminal displays a message prompting maintenance door closing.

B. Close the maintenance door and operate the bolts with the square key.

When the terminal detects that the door is closed, it is automatically locked.

> NOTE: If the maintenance menu is activated, select the Cancel function to trigger the locking function and leave the maintenance menu.

### 6.2.3 Procedure (degraded mode)

#### *6.2.3.1 Opening the door in degraded maintenance mode*

In the case of electronic failure, open the door with a mechanical key.

> NOTE: The emergency mechanical key is a security feature.
> It is strongly advised to store it in a secure location with access restricted to authorised personnel.

The electronic lock is equipped with protective flaps to reduce the risk of vandalism.

A. Insert the tip of the key (2) in the opening of the lock (3).
B. With the tip of the key, push the first protective flap to the left (4) and the second flap to the right (5).
C. When the keyholes are reachable, insert the key (2) in the lock and the square key (1) in its slot.
D. Perform a quarter turn with the key to unlock the door (2).
E. Operate the bolts with the square key and open the maintenance door.

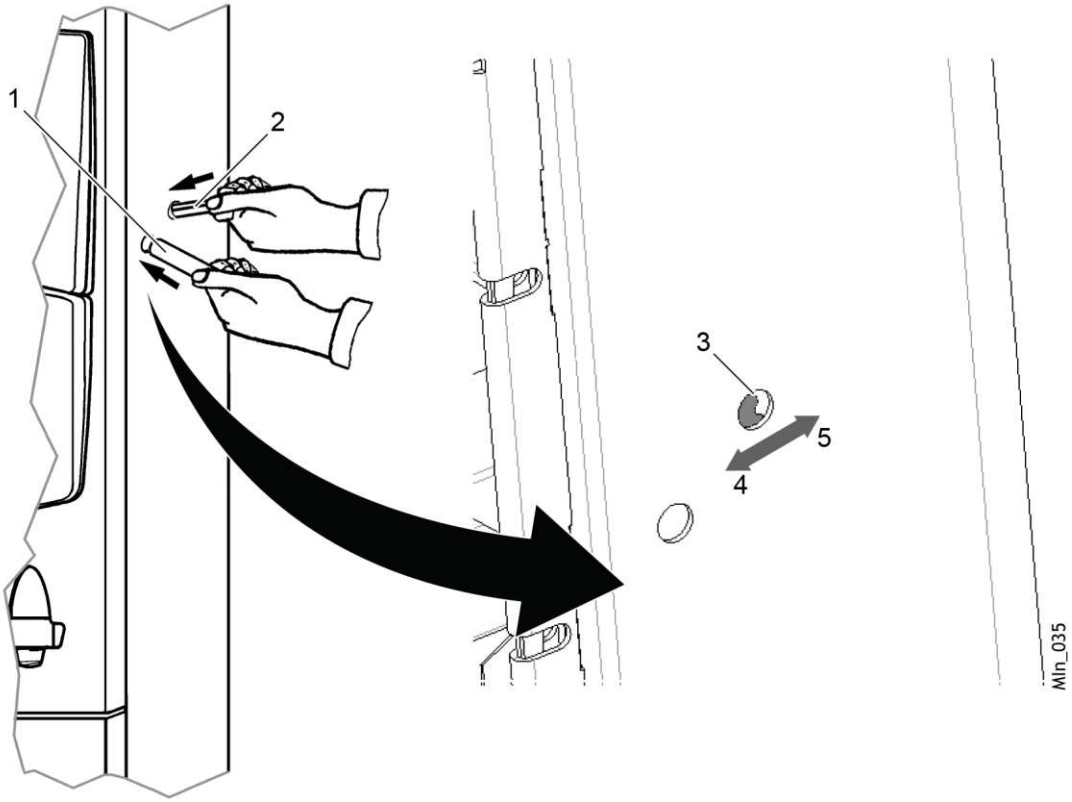


**Opening the door in degraded maintenance mode**

#### *6.2.3.2 Closing the door in degraded maintenance mode*

A. Insert the tip of the key in the opening of the lock (3).
B. With the tip of the key (2), push the first protective flap to the left (4) and the second flap to the right (5).
C. When the keyholes are reachable, insert the key (2) in the lock and the square key (1) in its slot.
D. Operate the bolts with the square key (1) and close the maintenance door.
E. Perform a quarter turn with the key to lock the door (2).
F. Remove the mechanical key (2) and the square key (1).

## 6.3 Opening / closing the trapdoor of the floor fixation compartment

### 6.3.1 Preliminary operations

A. Take a square key.

### 6.3.2 Procedure (normal mode)

#### *6.3.2.1 Opening the trapdoor of the floor fixation compartment*

A. Bring forward the slide lock (1) while holding the slide (2) located against the compartment wall.
B. Lift the slide (2).
C. Rotate the lock (1) to block the slide.

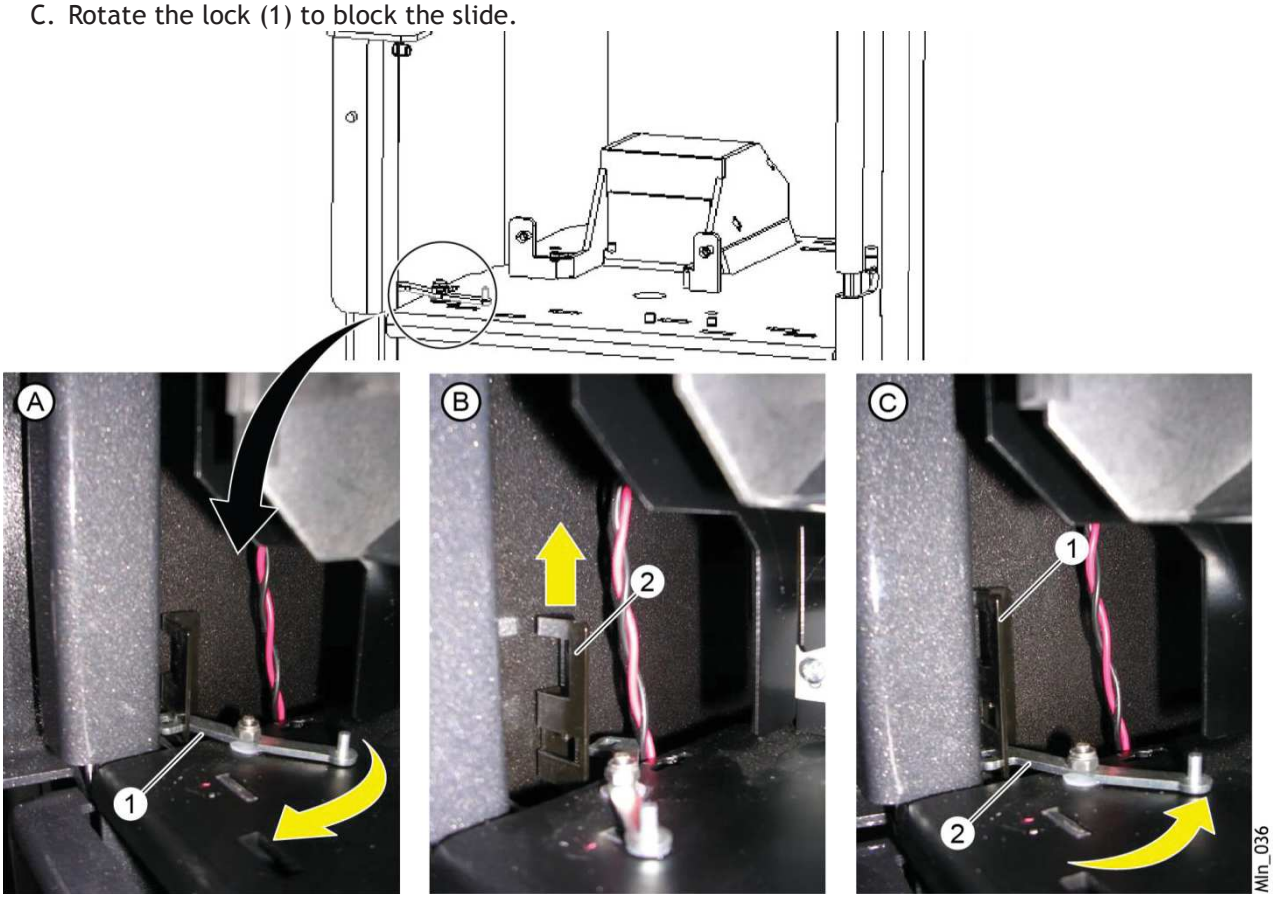


**Unlocking the trapdoor of the floor fixation compartment**

D. Open the trapdoor of the floor fixation compartment (2) with the square key (1).

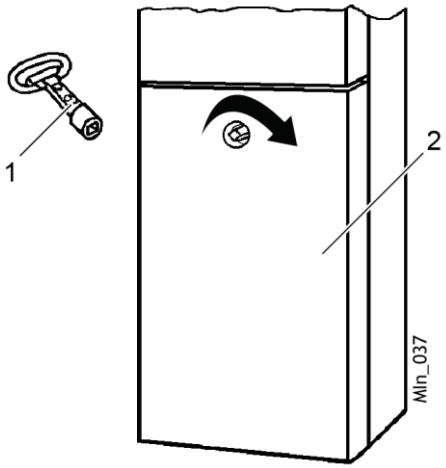


**Opening the trapdoor of the floor fixation compartment**

#### *6.3.2.2 Closing the trapdoor of the floor fixation compartment*

A. Close the trapdoor and lock it with the square key.
B. Bring forward the lock.
C. Lower the slide.
D. Bring the lock back to its original position to lock the slide.

**Important:** After closing the trapdoor, put its lock in lower position to block access.

### 6.3.3 Procedure (degraded mode)

Contact Parkeon.

## 6.4 Powering off / up the equipment

- Failure to follow the power-off procedure before performing some operations on the terminal may result in the loss of stored data.
- Do not disconnect the batteries or the battery strands when the terminal is powered.
- To avoid any data writing issue, wait for a few seconds after the screen is completely off (red LED of the touchscreen controller at the back of the screen off) before operating on the terminal or disconnecting the strands.

### 6.4.1 Preliminary operations

A. Open the maintenance door.

### 6.4.2 Procedure (normal mode)

#### *6.4.2.1 Power off*

A. Switch the ON/OFF switch of the main board to the OFF position.

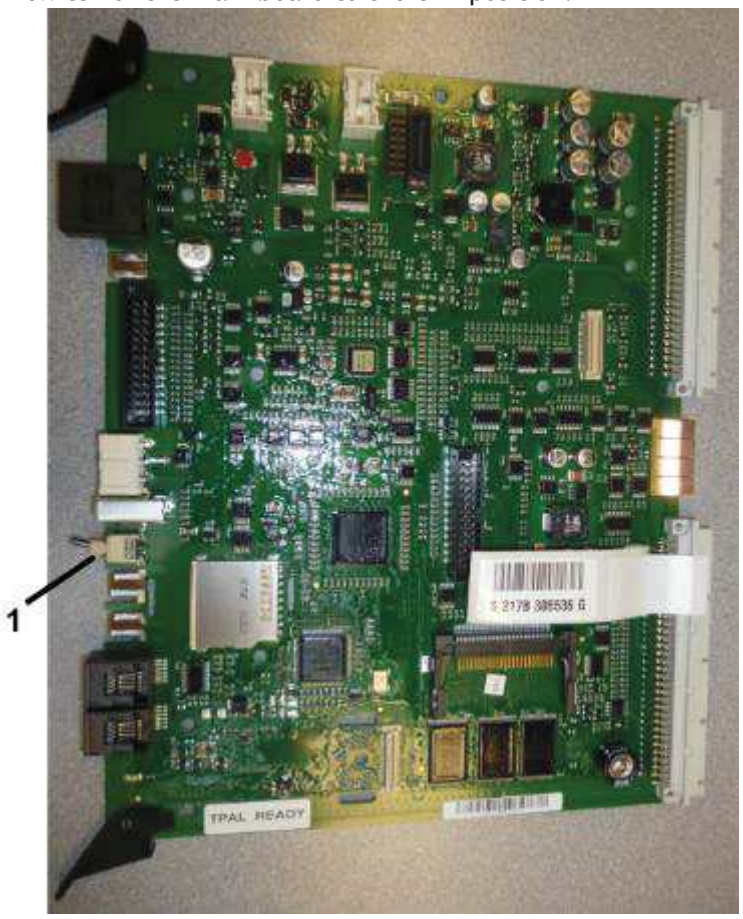


**ON/OFF switch**

#### *6.4.2.2 Power up*

A. Switch the ON/OFF switch of the main board to the ON position.

NOTE At power up, the terminal can take about 2 minutes to start.

#### *6.4.2.3 Final operations*

A. Close the maintenance door.

## 6.5 Opening / closing the Transfer collection door

### 6.5.1 Preliminary operations

A. Take the collection door mechanical key.

### 6.5.2 Procedure (normal mode)

#### *6.5.2.1 Opening the collection door*

A. Insert the key in the keyhole.
B. With the tip of the key, push the first flap to the left (1) and the second flap to the right (2).
C. When the lock can be reached, insert the key (3) and unlock the collection key (4) to access the supports (5).

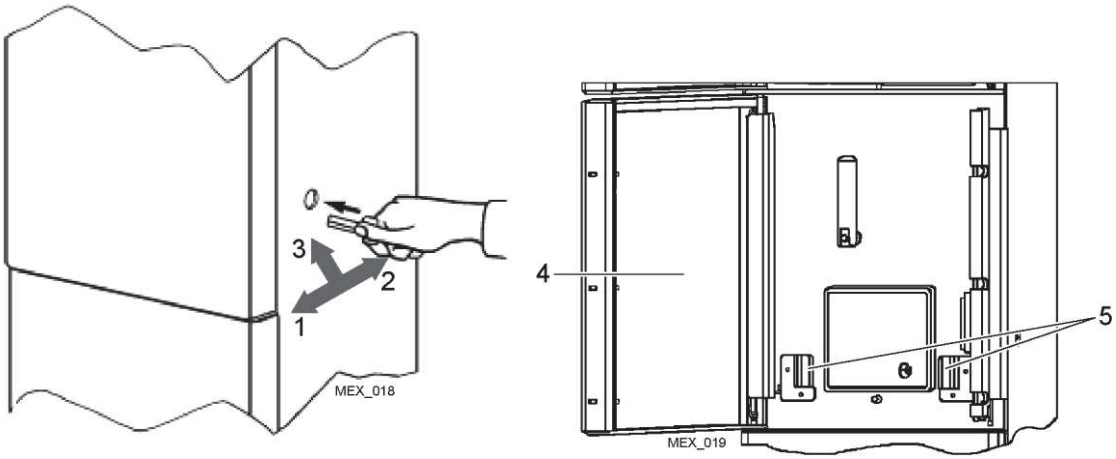


**Opening the collection door**

#### *6.5.2.2 Closing the collection door*

A. Close the lower door and perform an anticlockwise quarter turn to lock it.

### 6.5.3 Procedure (degraded mode)

Contact Parkeon.

## 6.6 Removing the collection key from the slide (transfer cassette)

### 6.6.1 Preliminary operations

Moving the key introduction end stop allows the removal of the key from the cassette.
That way, it is not necessary to have as many cassettes as terminals.

This method distinctly lowers the high level of security of the cassette system. Parkeon advises against this method.

### 6.6.2 Procedure

A. Push simultaneously the locking lever (1) and the "once" armament system (2).
B. Slide the slide outside the transfer cassette (3) to remove it.

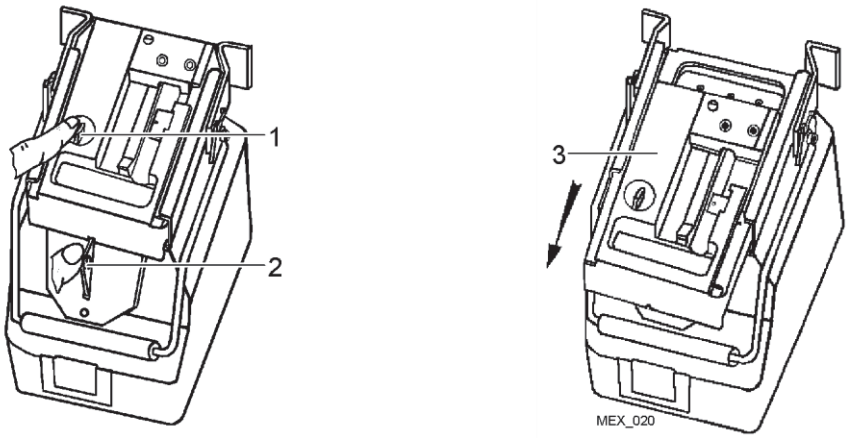


**Removing the collection key from the slide (1/2)**

C. Push the key introduction end stop (1).
D. Remove the collection key.

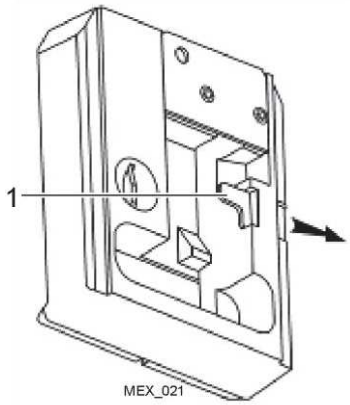


**Removing the collection key from the slide (2/2)**

E. Slide the slide backward to put it back in place in the transfer cassette.

## 6.7 Removing the collection key from the slide (collection trolley)

### 6.7.1 Preliminary operations

Moving the key introduction end stop allows the removal of the key from the collection head. It is possible to use one trolley to collect several terminals with different lock combinations.

This method distinctly lowers the high level of security of the cassette system. Parkeon advises against this method.

### 6.7.2 Procedure

Remove the slide end stop to move the key introduction end stop. It is located under the slide, near the pipe fixation.

A. Remove the two M3 screws / nuts (3) fixing the end stop (4) to the slide.
B. Remove the slide (1) from the collection head.

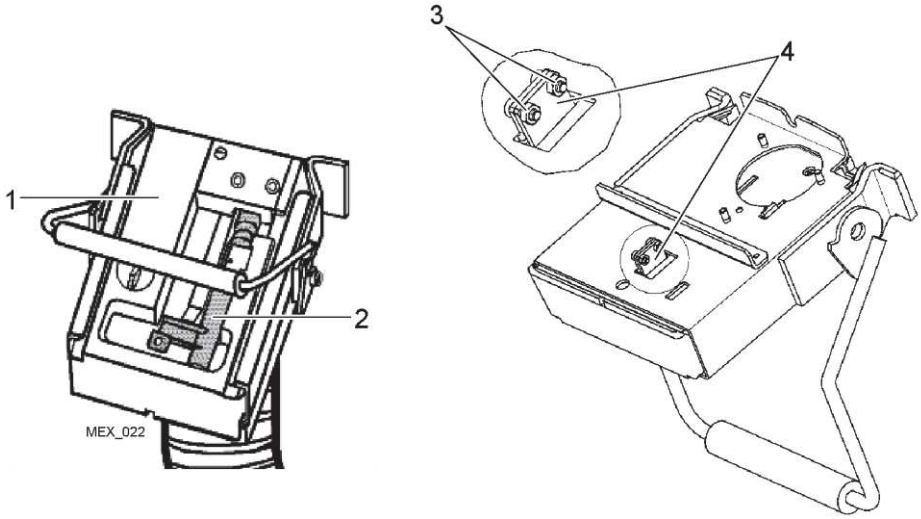


**Collection head**

C. Push the key introduction end stop (1).
D. Remove the collection key.

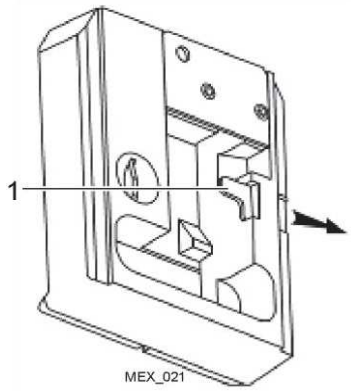


**Removing the collection key from the slide**

E. Slide the slide on the collection head to put it back in place.
F. Fix the slide end stop with the two screws / nuts.

## 6.8 Preparing the transfer cassette

### 6.8.1 Preliminary operations

A. Make sure that the transfer cassette is empty.

### 6.8.2 Procedure

A. If the collection key (1) has been removed from the slide (3) of the transfer cassette, the operator must place the key on the slide (4) before collecting (the key must remain on the cassette during the entire collection).
B. Push the locking lever (2) and bring forward the transfer cassette slide (5) to close the cassette.

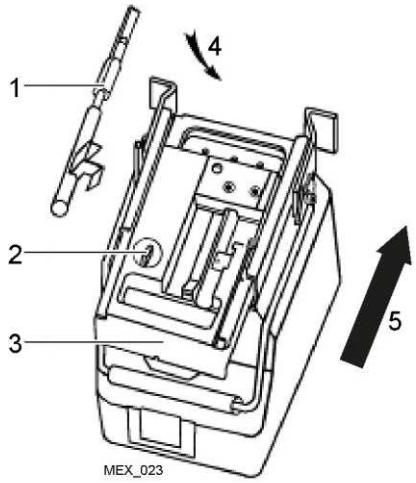


**Preparing the transfer cassette (slide unlocked)**

C. Push the "once" rearmament system (1) to arm the system.
D. Check that the light turns white (2).
E. Lock the rearmament system with a padlock (3) and / or sealing.

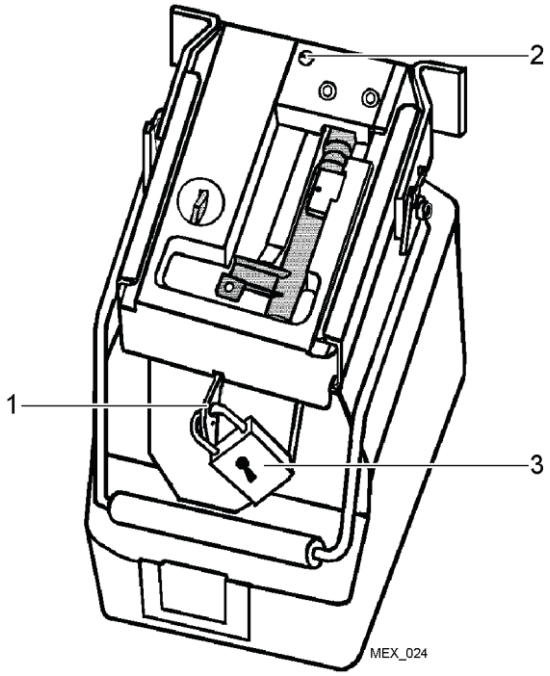


**Cassette prepared with key and "once" system armed**

The transfer cassette is ready to be used.

## 6.9 Preparing a coin box

### 6.9.1 Preliminary operations

Non applicable

### 6.9.2 Procedure

A. Arm the "once" system (1) located under the cover.

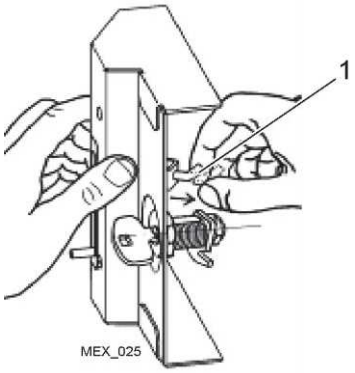


**Arming the "once" system**

B. Check that the light turns grey.
C. Put the cover back in place, lock the coin box, and remove the key.

## 6.10 Preparing a battery

NOTE This procedure must be carried out in workshop.

### 6.10.1 Preliminary operations

Non applicable

### 6.10.2 Procedure

A. To connect the 2 terminals, stack as follows (from the outside of the battery):
   - screw,
   - battery terminal,
   - serrated washer,
   - strand terminal,
   - nut with serrated base.

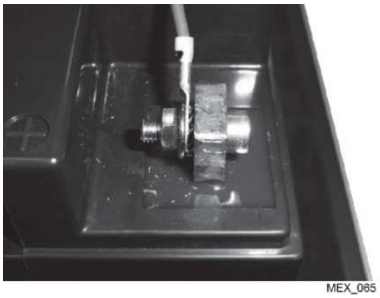


**Preparing the connections**

B. Put caps on the two terminals.
C. Put a tie to waterproof the connection (as indicated on the figure below).

**Waterproofing the connections (example with + red terminal)**

D. Put a third tie at the base of the red terminal protection of the 42 Ah battery (as indicated on the figure below).

**Last tie**

E. Cut the ties and slightly curve the terminals toward the inside of the battery.

# 7. Electronic money procedures

## 7.1 Organisation and security

### 7.1.1 Organisation

The **Park***folio* server centralises financial data and allows the organisation of the collection rounds depending on the data on coin box filling.

Collections must be organised randomly:

- during the collection round,
- when a green warning LED flashes: coin box almost full,
- when a red failure LED flashes: coin box full.

In case of collection malfunction, the respective LEDs are green, payment by coin is impossible, but payment by card is available..

NOTE

The green warning LED also blinks but less quickly to indicate that the terminal is operational even if the display is in standby mode.

### 7.1.2 Security

Parkeon designs its parking terminals to ensure a high level of protection against fraud. Special care must be paid to the various potential risks of fraud and theft. Certain basic precautions must be respected:

- Always make sure that the cassette is **empty** and that the "once" opening system is engaged (armament tip of the "once" system),
- Always store the door and till keys in a **safe place**.

Before collecting, the service operator must ensure that the terminal operates correctly, especially the collection electronic lock.

## 7.2 Collection by transfer cassette (without trolley)

### 7.2.1 Preliminary operations

A. Make sure that the terminal operates correctly.
B. Open the collection door.
C. Make sure that the transfer cassette is prepared.

### 7.2.2 Procedure

#### *7.2.2.1 Inserting the cassette*

A. Hang the transfer cassette on the supports (1) located on the collection compartment.

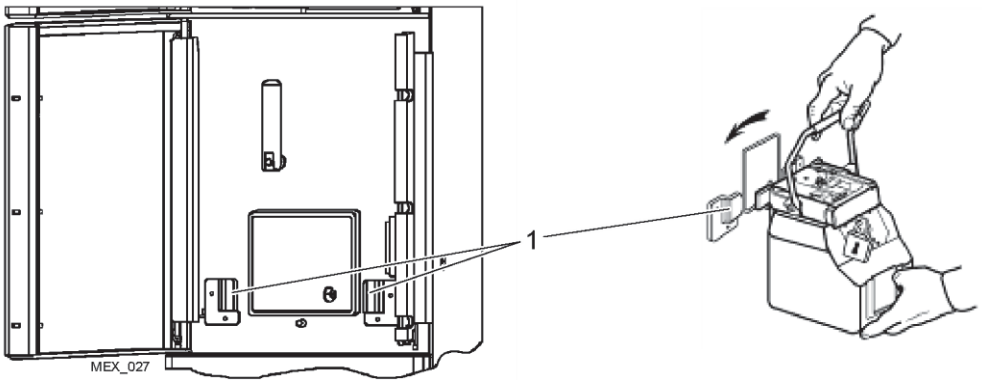


**Installing the cassette**

B. Push the collection key (1) toward the back of the slide (2) to insert it in the collection till lock.

C. Turn the key clockwise (3) to unlock the till.

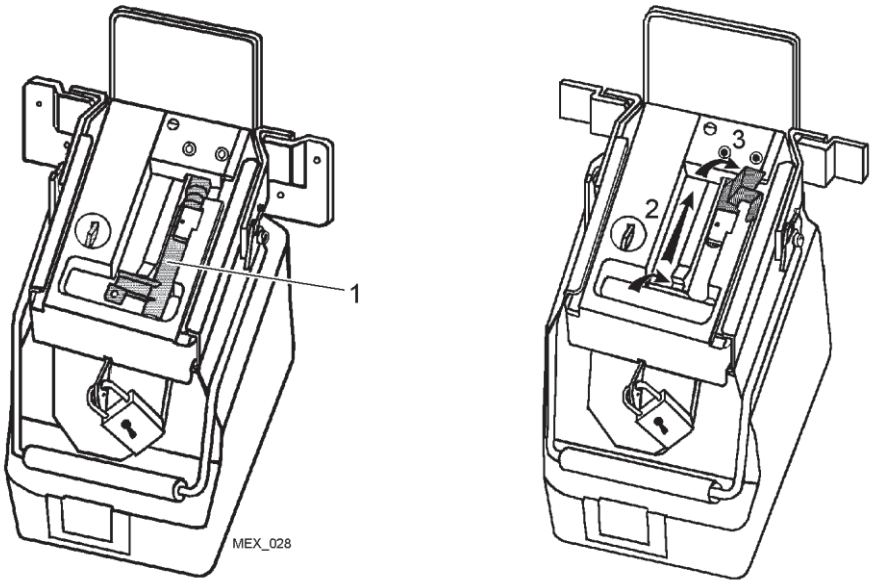


**Unlocking the till**

### *7.2.2.2 Emptying the till*

A. Push the locking lever (3) and hold it (5).
B. Bring forward (6) the transfer cassette slide (4) to open the cassette and slide the collection till (2).

The coins contained in the coin box drop in the transfer cassette.

C. Pull and rotate (7) the paper jam handle (1) vigorously both ways to check that all the coins drop in the cassette.

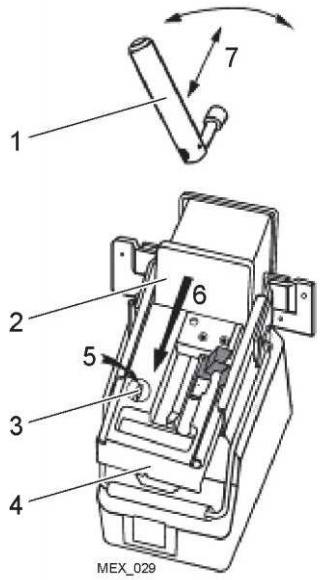


**Emptying the till**

### *7.2.2.3 Closing the coin box*

A. When the coin box is empty, put the paper jam handle back in its original position.
B. Push the locking lever (2) and hold it (5).
C. Slide the transfer cassette slide (3) backward (6) to close the till (1).

NOTE The "once" opening system is disarmed (white light not lit). The cassette cannot be used a second time.

D. Turn the key (4) anticlockwise (7) to lock the till.
E. Push the collection key toward the front of the slide (8) to remove it from the till lock.

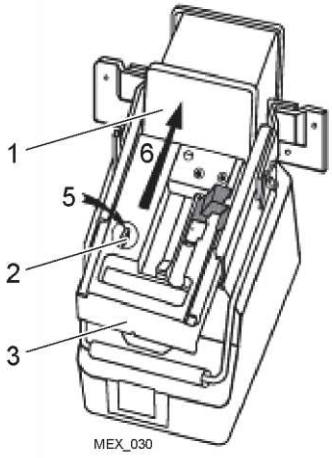


Closing the till

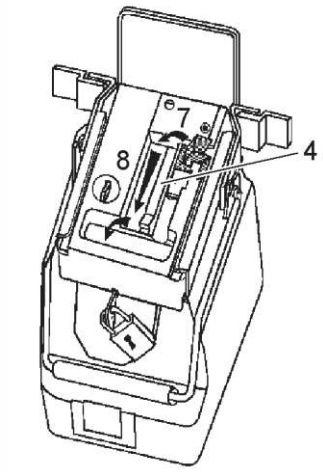


Locking the till

**Closing the coin box**

The "once" opening system is armed. The cassette cannot be open again.

### *7.2.2.4 Removing the transfer cassette and closing the terminal lower door*

A. Take the cassette off the two supports located in the collection compartment and lift it by its handle.

The transfer cassette can weigh up to 25 kg when full.
Respect the safety instructions when handling it.

B. Close the collection door.
C. Bring the cassette to a sorting centre to empty it.

Do not try to use the cassette on another terminal.

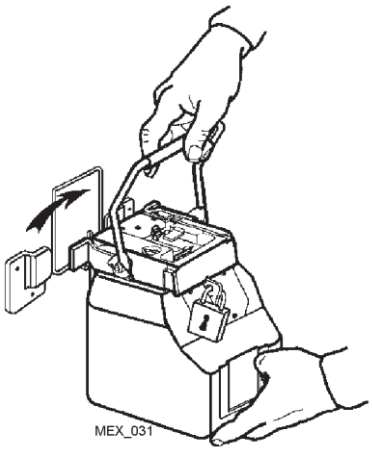


**Removing the transfer cassette**

### *7.2.2.5 Collection ticket*

A collection ticket is automatically printed at the end of the collection.
The collection ticket has the same format as a parking ticket. It includes the following information:

- the date and time of collection,
- the terminal No (Id),
- the collection No (Col nb),
- the amount of the collection (Amount) (option),
- the distribution of the collected coins by type of coin (option).

The ticket slot (1) located on the transfer cassette enables to keep the collection ticket with the cassette that was used to collect the parking terminal.

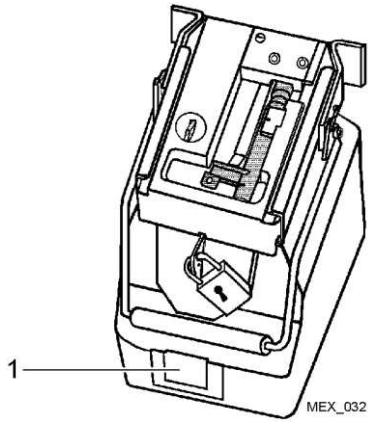


**Ticket slot**

## 7.3 Collection by transfer cassette (with trolley)

### 7.3.1 Preliminary operations

A. Make sure that the terminal operates correctly.
B. Open the collection door.
C. Make sure that the collection trolley is empty and padlocked.

### 7.3.2 Procedure

#### *7.3.2.1 Inserting the collection head*

A. Hang the collection head on the supports (1) located on the collection compartment.

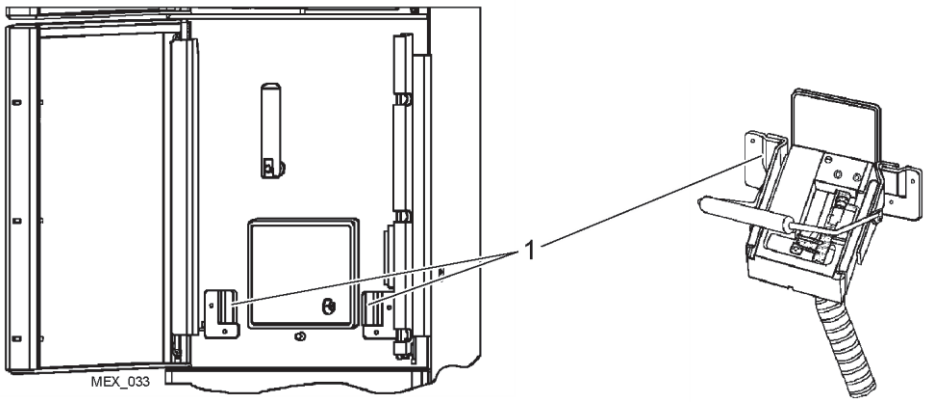


**Installing the collection head**

B. Push the collection key (1) toward the back of the slide to insert it in the collection till lock (2).
C. Turn the key clockwise (3) to unlock the till.

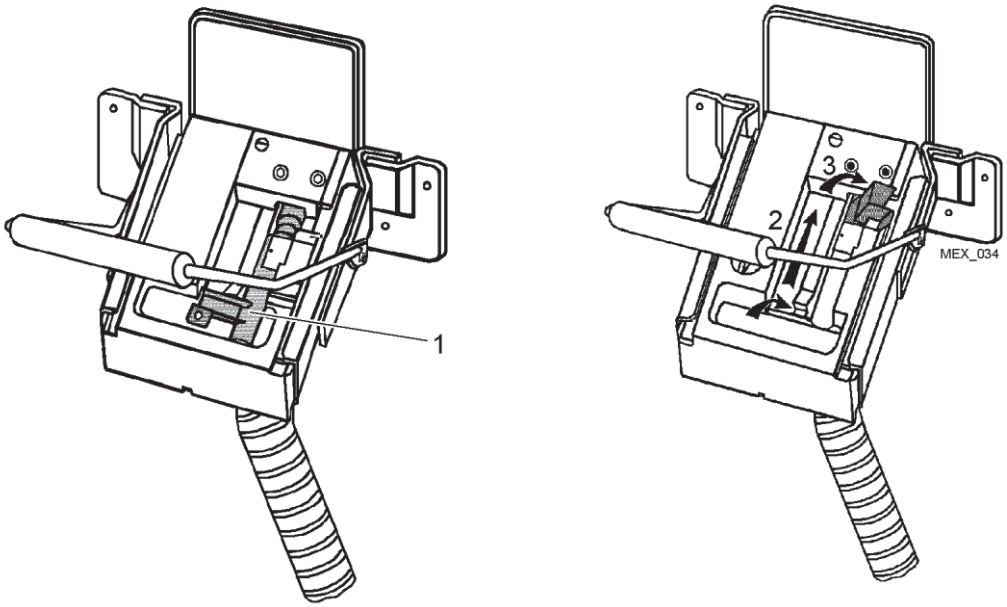


**Unlocking the till**

### *7.3.2.2 Emptying the till*

A. Push the locking lever (3) and hold it.
B. Bring forward the collection head slide (4) to open the cassette and slide the collection till (2).

The coins contained in the coin box drop in the trolley through the collection head and pipe.

C. Pull and rotate (5) the paper jam handle (1) vigorously both ways to check that all the coins drop in the trolley.

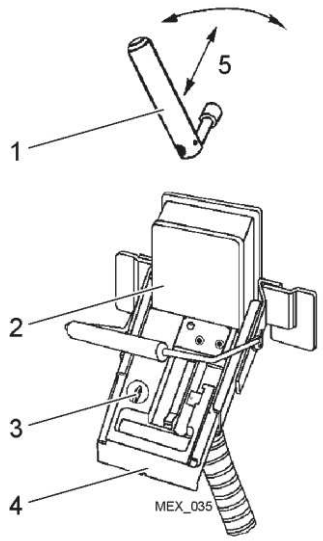


**Emptying the till**

### *7.3.2.3 Closing the coin box*

A. When the coin box is empty, put the paper jam handle back in its original position.
B. Push the locking lever (2) and hold it.
C. Slide the collection head slide (3) backward (5) to close the till (1).
D. Turn the key anticlockwise (6) to lock the till.
E. Push the collection key (4) toward the front of the slide (7) to remove it from the till lock.

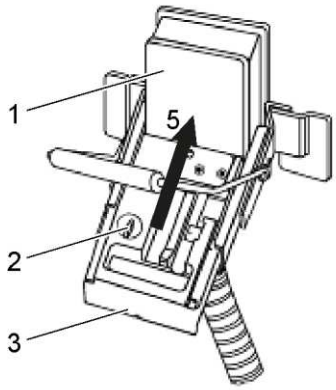


**Closing the till**

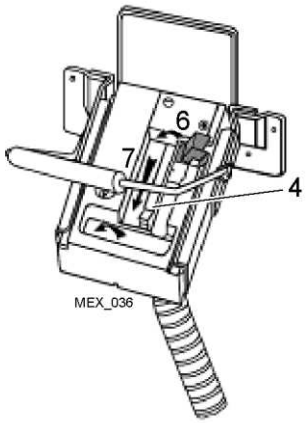


**Locking the till**

**Closing the coin box**

### *7.3.2.4 Removing the transfer cassette and closing the terminal lower door*

A. Take the collection head of the trolley off the two supports located in the collection compartment and lift it by its handle.
B. Close the collection door.
C. Bring the trolley to a sorting centre to empty it.

### *7.3.2.5 Collection ticket*

A collection ticket is automatically printed at the end of the collection.

The collection ticket has the same format as a parking ticket. It includes the following information:

- the date and time of collection,
- the terminal ID No,
- the collection number (Col nb),
- the amount of the collection (Amount) (option),
- the distribution of the collected coins by type of coin (option).

## 7.5 Emptying a transfer cassette

It is strongly advised to not empty a coin box near a parking terminal. A trolley must be emptied in a safe location (a sorting centre for instance).

### 7.5.1 Preliminary operations

A. Recover a cassette from a collection operator.

### 7.5.2 Procedure

A. Remove the padlock and / or sealing of the "once" system.
B. Press simultaneously the locking lever (1) and the "once" armament system (2).
C. Bring the slide (3) toward the front to open the transfer cassette.

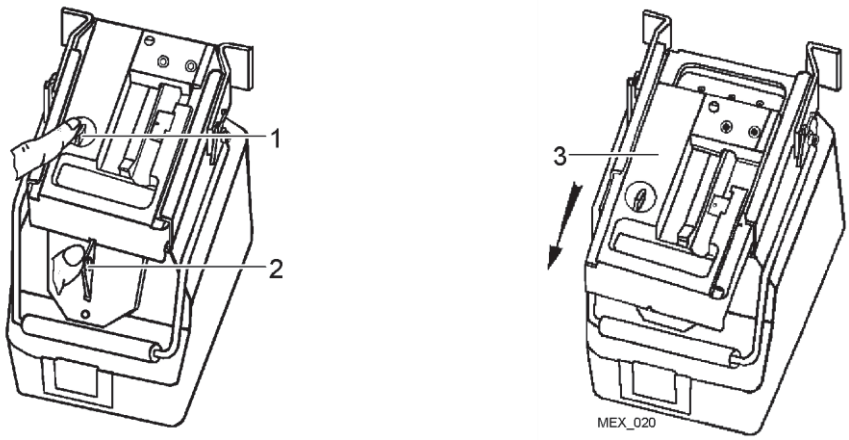


**Closing the coin box**

D. Empty the transfer cassette.

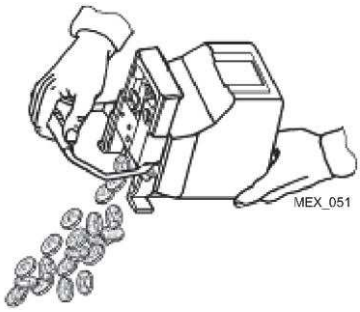


**Emptying**

E. Prepare the transfer cassette before any collection.

## 7.6 Emptying a trolley

It is strongly advised to not empty a trolley near a parking terminal. A trolley must be emptied in a safe location (a sorting centre for instance).

### 7.6.1 Preliminary operations

A. Recover a trolley from a collection operator.

### 7.6.2 Procedure

A. Remove the padlock(s).
B. Remove the handle (4), pipe (2), and collection head (1) from the trolley (3).
C. Empty the trolley.

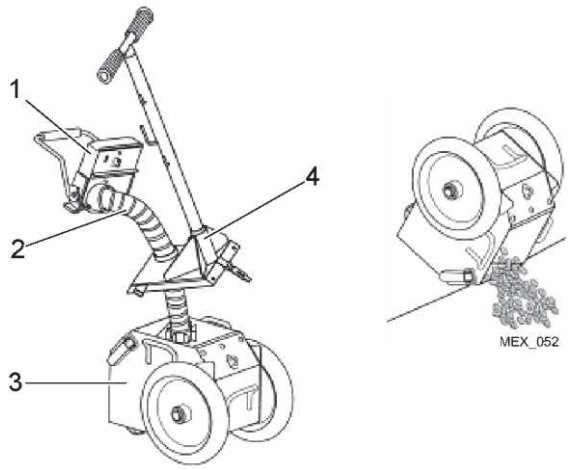


**Emptying the trolley**

D. Put the handle, pipe, collection head, and padlock(s) back in place.

The collection trolley can then be used for a new collection round.

## 7.7 Storing the coin box

Parkeon recommends **vertical** storage of the coin boxes.

However, horizontal storage is also possible.

In the case of horizontal storage, face to face, the handle (1) provides protection against potential shocks to the driving axis (2).

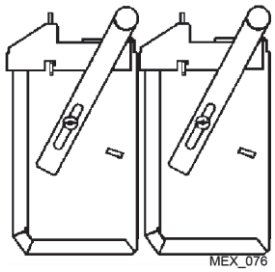


Vertical storage

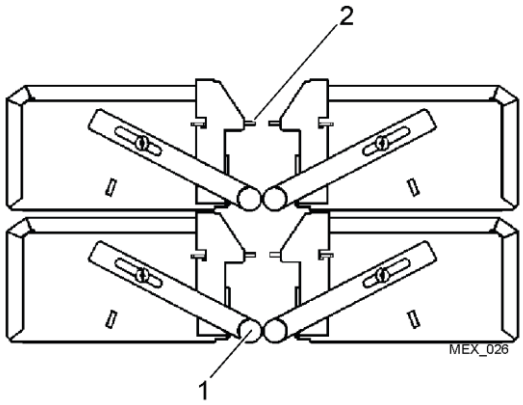


Horizontal storage

**Storage**

## 7.8 Collecting the coin box

### 7.8.1 Preliminary operations

A. Make sure that the terminal operates correctly.
B. Take a prepared and empty coin box.
C. If the message **MCB collection unauthorised** is displayed, it means that the lock was blocked by **Park***folio*.
Unblocking the lock is possible:
- with **Park***folio*,
- with function 90 (if a new version of Neops is loaded on the terminal with a different database).

### 7.8.2 Procedure

#### *7.8.2.1 Unlocking the collection trapdoor*

To enter the collection mode, press a combination of buttons on the extended keyboard.

A. Press simultaneously the **Cancellation** (1) and **Validation** (1) buttons.

**Buttons to enter the collection mode**

B. Hold the **Cancellation** button until the **Release change button** message appears, then release the button.

**"Release change button" message**

The terminal then displays the following menu.

**Collection menu**

C. Put the cursor on the **Collection** function using the **Validation** button.
D. Press the **Cancellation** button to select the function.

The terminal displays a message requesting the collection key.

**Waiting for collection key**

E. Put the electronic collection key (1) on the **electronic collection key** interface (2) located on the left wall of the tickets bowl.

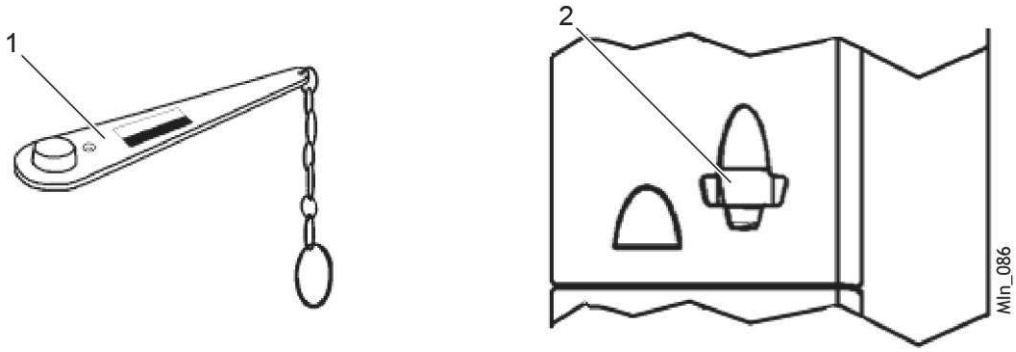


**Collection key**

With the banknote reader, Put the electronic collection key (1) on the electronic collection key interface located in the tickets bowl (2).

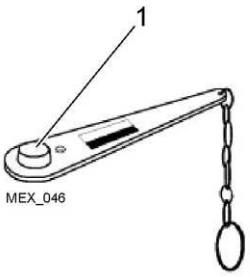

Collection key

When the key is detected, the collection light turns green and the terminal starts collection.

**Collection start**

F. Remove the collection key.

### *7.8.2.2 Replacing the coin box*

A. Open the collection trapdoor (1), the coin box flap is locked in closed position).

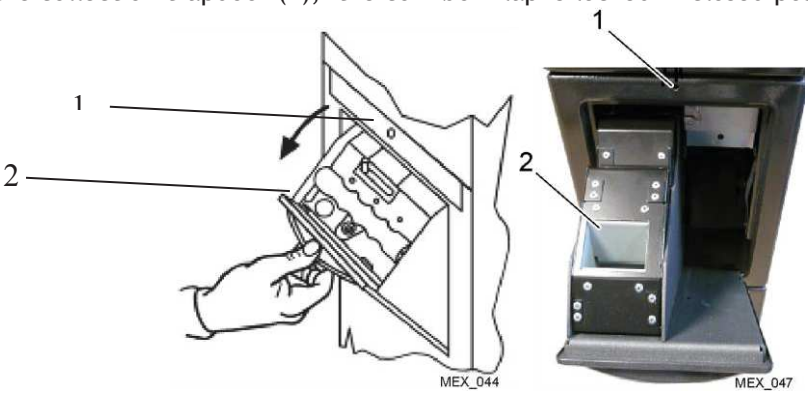


**Opening the collection trapdoor**

B. Remove the full coin box (2) located in the collection trapdoor.
C. Place a new, empty, and armed coin box (check that the flap (1) is closed and that the armament light is grey. Grey light (2): OK, black light (3): NOK).

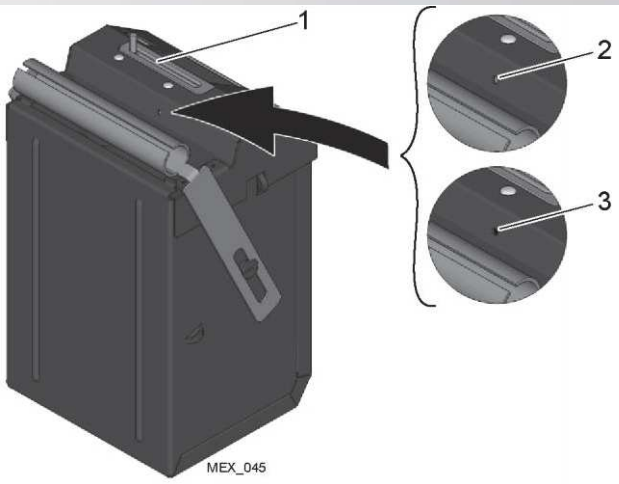


**Opening the collection trapdoor**

D. Close the collection trapdoor.

When the lock is locked and no collection default is present, the collection light turns off and the terminal prints a collection ticket.

E. Take the collection ticket from the ticket bowl.

If the **trapdoor accidentally closes without coin box**, the collection light flashes red.

To go back to a normal operation of the terminal, the operator must carry out a collection and install an empty and armed coin box.

### *7.8.2.3 Collection ticket*

A collection ticket is automatically printed at the end of the collection.

The collection ticket has the same format as a parking ticket. It includes the following information:

- the date and time of collection,
- the terminal ID No,
- the collection number (Col nb),
- the distribution of the collected coins by type of coin (option),
- the amount of the collection (Amount) (option).

## 7.9 Emptying a coin box (Coins only collection)

It is strongly advised to not empty a coin box near a parking terminal. A coin box must be emptied in a safe location (a sorting centre for instance).

### 7.9.1 Preliminary operations

A. Recover a coin box from a collection operator.

### 7.9.2 Procedure

A. Perform a clockwise quarter turn with the engraved key to unlock the coin box **(1 and 2)**.
B. Slide the cover to remove it **(3 and 4)**.

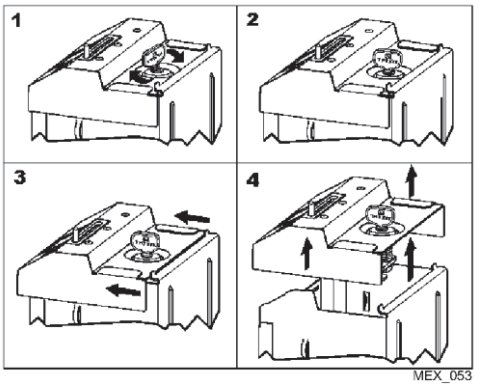


**Emptying the coin box (1/2)**

C. Empty the coin box.

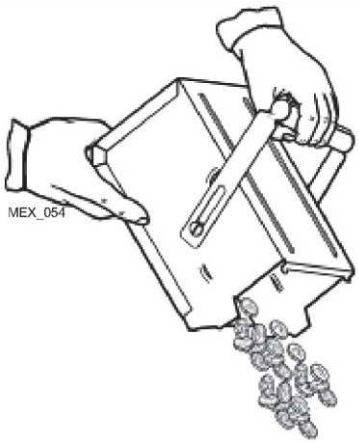


**Emptying the coin box (2/2)**

D. Arm the "once" system (1) located under the cover.

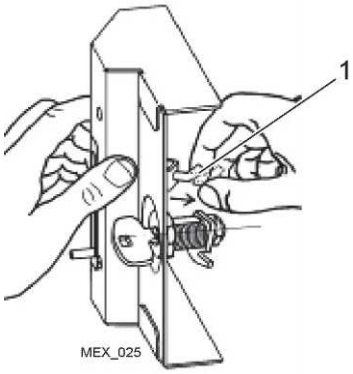


**Arming the "once" system**

E. Check that the light turns grey.
F. Put the cover back in place, lock the coin box, and remove the key.

## 7.10 Lubricating the exchangeable coin box

NOTE This operation is to be performed in a safety workshop or sorting centre.

### 7.10.1 Preliminary operations

Non applicable

### 7.10.2 Procedure

A. The flap and the opening slide of the exchangeable coin box must be lubricated twice a year with a silicon-based lubricant spray.

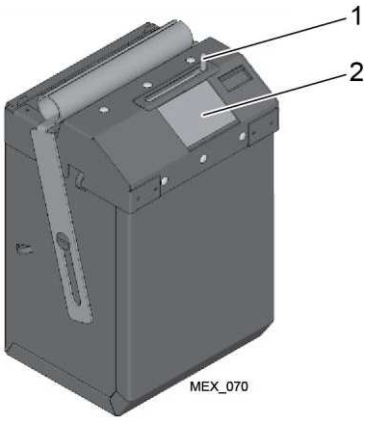


**Lubrication**

NOTE Lubrication prevents jamming of the flap and malfunction of the micro-switches.

## 7.11 Emptying the coin box (with banknote collection)

! It is strongly advised to not empty a coin box near a parking terminal. A coin box must be emptied in a safe location (a sorting centre for instance).

### 7.11.1 Preliminary operations

A. Recover a coin box from a collection operator.

### 7.11.2 Procedure

A. Perform an anticlockwise quarter turn with the engraved key to unlock the coin box (1).
B. Slide the cover to remove it (2 and 3).

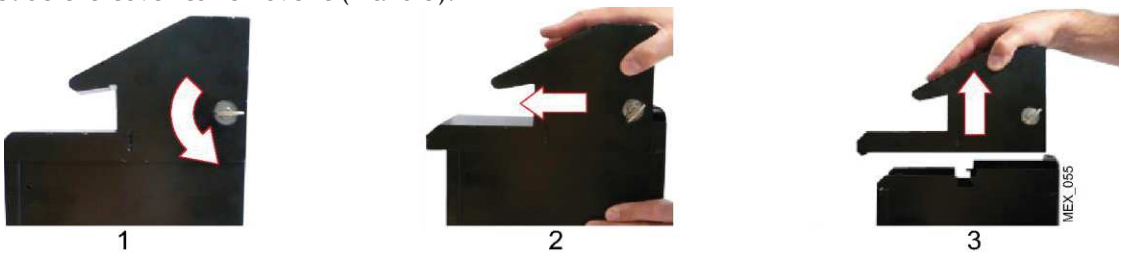


**Opening the coin box**

C. Empty the coin box.
D. Put the cover back in place, lock the coin box, and remove the key.

## 7.12 Collecting the banknote stacker

### 7.12.1 Preliminary operations

A. Make sure that the terminal operates correctly.
B. Take an empty stacker.
C. If the message **MCB collection unauthorised** is displayed, it means that the lock was blocked by **Park***folio*.
Unblocking the lock is possible:
- with **Park***folio*,
- with function 90 (if a new version of Neops is loaded on the terminal with a different database).

### 7.12.2 Procedure

#### *7.12.2.1 Unlocking the collection trapdoor*

To enter the collection mode, press a combination of buttons on the extended keyboard:

A. Press simultaneously the **Cancellation** (1) and **Validation** (1) buttons.

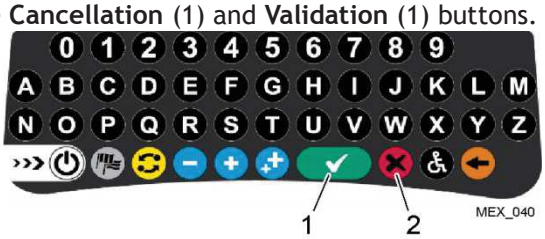


**Buttons to enter the collection mode**

B. Hold the **Cancellation** button until the **Release change button** message appears, then release the button.

**Release change button" message**

The terminal then displays the following menu:

**Collection menu**

C. Put the cursor on the **Collection** function using the **Validation** button.
D. Press the **Cancellation** button to select the function.

The terminal displays a message requesting the collection key.

**Waiting for collection key**

E. Put the electronic collection key (1) on the electronic collection key interface located in the tickets bowl (2).

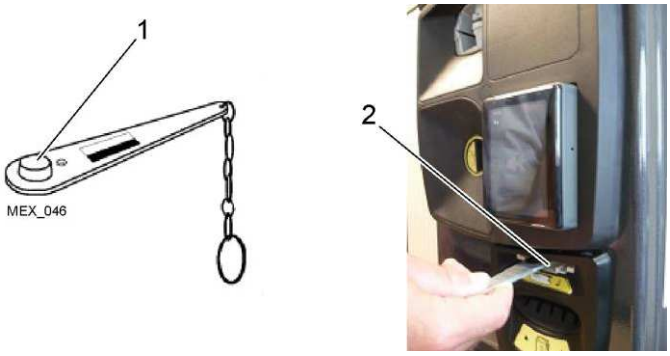


**Collection key**

When the key is detected, the collection light turns green and the terminal starts collection:

**Collection start**

F. Remove the collection key.
G. Press simultaneously the cancellation (2) and validation buttons (1).

**Buttons to enter the collection mode**

### *7.12.2.2 Replacing the banknote stacker*

A. Open the collection trapdoor (the coin box flap is locked in closed position) to access the banknote stacker (1).

**Opening the collection trapdoor**

B. Remove the banknote stacker located right of the collection trapdoor by pressing on the removal tabs on each side of the stacker.

**Removal tab**

C. Slide an empty banknote stacker (1) along the trapdoor (2).
D. Put the banknote stacker in its place to lock it on the banknote reader (3).

1 2 3

**Installing the new stacker**

E. Close the collection trapdoor.

When the lock is locked and no collection default is present, the collection light turns off and the terminal prints a collection ticket.

F. Take the collection ticket from the ticket bowl.

If the **trapdoor accidentally closes without coin box**, the collection light flashes red.

To go back to a normal operation of the terminal, the operator must carry out a collection and install an empty stacker.

### *7.12.2.3 Collection ticket*

A collection ticket is automatically printed at the end of the collection.

The collection ticket has the same format as a parking ticket. It includes the following information:

- the date and time of collection,
- the terminal ID No,
- the banknote collection No (Col nb),
- the amount of the collection (Amount) (option),
- the distribution of the collected banknotes by type of banknote (option).

## 7.13 Emptying the banknote stacker

It is strongly advised to not empty a banknote stacker near a parking terminal. A stacker must be emptied in a safe location (a sorting centre for instance).

### 7.13.1 Preliminary operations

A. Recover a banknote stacker from a collection operator.

### 7.13.2 Procedure

A. Each banknote stacker is supplied with a key. Use it to unlock and open the stacker.

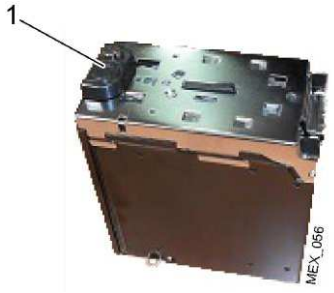


**Opening the banknote stacker**

B. Push on the support plate and remove the banknotes.

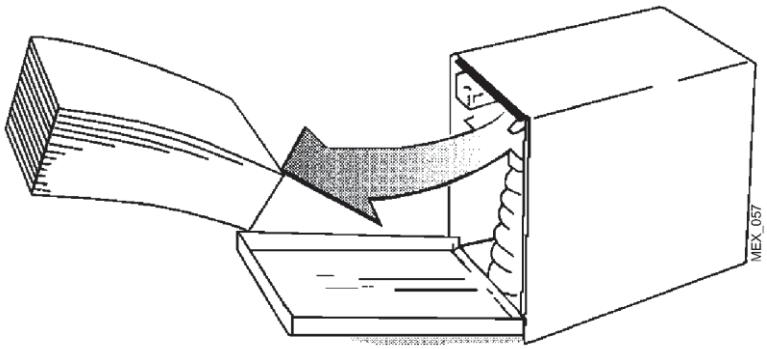


**Emptying the banknote stacker**

C. Close the stacker trapdoor and remove the key.

# 8. Service operations

## 8.1 Replacing the ticket roll

For the ticket count to be accurate:

- the terminal must be in operation when replacing the ticket roll,
- Parkeon recommends installing a brand new ticket roll.

### 8.1.1 Preliminary operations

A. Open the maintenance door.

### 8.1.2 Procedure

A. Lift the paper protection.
B. Remove the extremity of the ticket roll from the printer.
C. Remove the roll and the paper reel axis from the terminal.
D. Check the flatness of the new ticket roll.

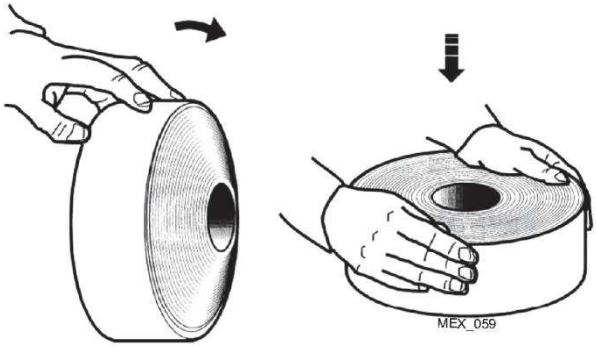


**Checking the flatness of the ticket roll**

E. Position the axis of the paper reel in the new ticket roll.
F. Install the new ticket roll / paper reel axis assembly in the terminal.

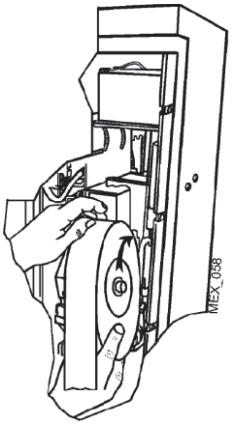


**Installing the ticket roll**

G. Check that the roll rotates freely in the support.
H. Insert the extremity of the paper in the printer guide and gently push the paper until it reaches its end stop.
I. Put the paper protection back in place.
J. Enter the maintenance mode and perform function **211**.

The terminal displays the following screen:

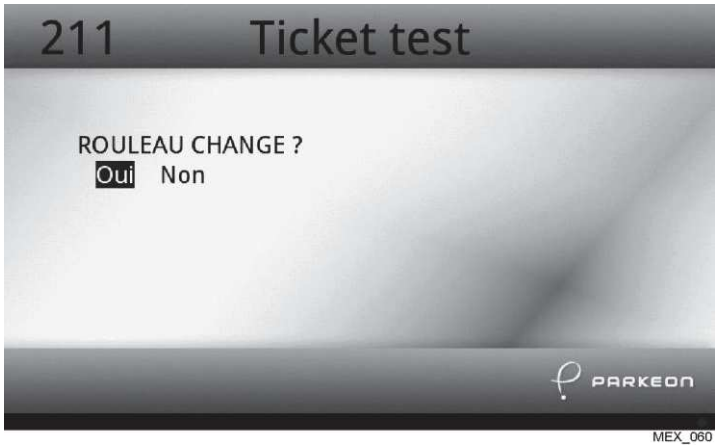


**Paper roll replacement screen**

K. If the new ticket roll is brand new, validate **Yes**: the terminal takes the replacement into account and updates the ticket count.
   To cancel the replacement or if the ticket roll is not brand new, select **No** and validate.

After validation or cancellation of the replacement, the terminal prints a test ticket.

### 8.1.3 Final operations

A. Take the printed test ticket.
B. Close the maintenance door.

## 8.2 Basic functions

- Press **F** on the keyboard to access the maintenance menu.
- Select the programming function number in the list below, for instance **1** (time setting).
- Use **V** to validate.

Do not use any other maintenance function number without prior consent from the technical service.

### 8.2.1 Function 1 - Setting the date and time

It is possible to modify all or part of these elements.

A. Enter the date, for instance 9:57, Friday, 25 September 2015:

- The day flashes: type "**25**" and press "⇒"
- The month flashes: type "**09**" and press "⇒"
- The year flashes: type "**15**" and press "⇒"
- The hour flashes: type "**09**" and press "⇒"
- The minutes flash: type "**57**" and press "**V**"

The terminal automatically displays the day (here, Friday).

### 8.2.2 Function 12 - Setting the terminal number and city ID

A. Enter the parking terminal number, for instance "**25340002**". This number is used as a reference and for other administrative purposes in the **Park***folio* system.
   - Press **V**.
   - The last four digits flash: type **2** and press "⇒"
   - The first four digits flash: type **2534** and press **V**

B. Enter the park number (5 digits).

C. Enter an alphanumeric identifier, called city ID, with 8 characters. Use the numeric keys on the maintenance keyboard and press **T** to choose a character.

### 8.2.3 Function 14 - Setting the paper level warning threshold

This function allows setting of the threshold (remaining tickets) after which a default will be transmitted to warn that the ticket roll should be replaced.

Once a new ticket roll is installed and the operator validates the replacement (function **211** by pressing directly on the **T** key), the count is reset to **6,500 tickets**.

The ticket count deducts each printed ticket.

The ticket rolls have two gauges that enable the adjustment of the ticket number:

- When the printer reaches the "double" black dot level (twice as big as the standard black dot), the count is automatically adjusted to **500** remaining tickets.
- When the printer reaches the "triple" black dot level (three times as big as the standard black dot), the count is automatically adjusted to **200** remaining tickets.

The screen displays:

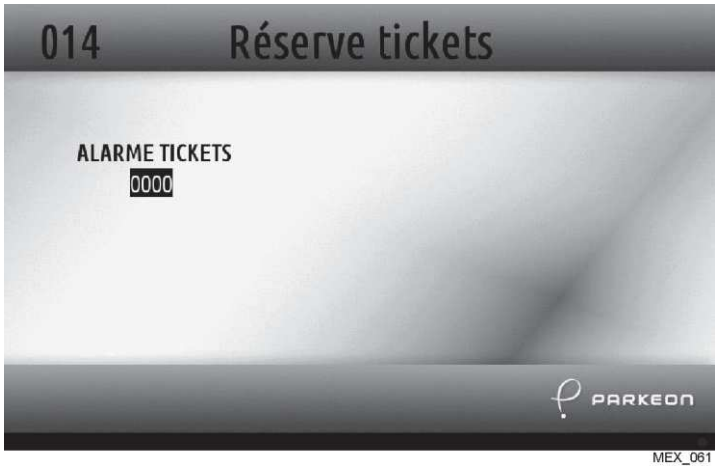


**Setting the warning threshold**

The setting method depends on the warning threshold requested:

- For a warning threshold below 500 tickets, directly enter the threshold value (for instance "300").
- For a warning threshold above 500 tickets, enter a fictional threshold calculated according to the indications below.

  For a standard ticket roll with 4,500 tickets: To obtain an actual warning threshold **Sr** above 500, the fictional threshold **Sf** must be configured as follows: Sf = (6500 – 4500) + Sr.

  → *For instance, for an actual warning threshold at 600 remaining tickets, the fictional threshold must be configured at 2,600 (6500-4500+600=2600).*
- Validate with "V".

### 8.2.4 Function 26 - Collection ticket copy

This function allows to print a copy of the previous collection ticket to facilitate the administrative and budget monitoring of the parking terminal.

### 8.2.5 Function 53 - Periodic balancing

This function allows to schedule a periodic account balancing on a weekly or monthly basis. Enter the day of the month or the number of the week day *(Monday corresponds to 1)*.

NOTE

This function is in connection with the SAO Standard financial data management and has no effect on the transaction-based financial data management.

The other basic functions are:

### 8.2.6 Function 95 - Printing the supply voltages

### 8.2.7 Function 96 - Viewing (and cancelling) the red failure LED

### 8.2.8 Function 97 - Viewing (and cancelling) the green warning LED

Functions 96 and 97 do not allow to cancel failures or warnings coming from the exchangeable coin box.

## 8.3 Correcting paper jams in the printer

### 8.3.1 Preliminary operations

A. Open the maintenance door.

### 8.3.2 Procedure

A. Lift the paper protection.
B. Remove the extremity of the ticket roll from the printer.
C. Remove the potential paper scraps stuck in the printer.
D. Cut the extremity of the ticket roll damaged by the paper jam.
E. Insert the extremity of the ticket roll in the printer guide and gently push the paper until it reaches its end stop.
F. Reinstall the paper protection.
G. Print a test ticket (function 211) to check the operation of the printer and adjust the first ticket position.
H. Close the maintenance door.

## 8.4 Checking the batteries voltage

### 8.4.1 Procedure

Maintenance function **95** triggers the measurement of the batteries when idle and in operation.

The terminal asks the operator whether they want to print a supply voltage ticket with the various measurements or just consult them onscreen.

**Checking the batteries** voltage

Replace the battery if the operation voltage is below 11.5 V.

The terminal automatically controls:

- the batteries voltage when idle every hour,
- the batteries voltage in operation at each transaction.

## 8.5 Recommendations for the batteries

**Safety information**

Remove all metal objects (watch, jewellery, etc.) from your hands, wrists, and neck before starting the intervention.

Wear adapted personal protective equipment: protection gloves, mask, and goggles.

To avoid electrostatic discharge when handling the batteries:

- Do not wear clothes and shoes that may create an electrostatic charge.
- Only clean the batteries with wet absorbent cloths.

In case of accidental contact between the eyes and the electrolyte, rinse immediately with large amounts of water.

- There is a risk of explosion if batteries recommended by Parkeon are replaced by other batteries. Always replace batteries by batteries certified by Parkeon.
- Never wait to reach the critical threshold of a battery before recharging it.
- Recharge batteries stored for more than 6 months.
- It is recommended to replace the batteries every 2 years on operating terminals.

To charge a battery, use a charger certified by Parkeon.

Using an inappropriate battery charger may lead to overheating of the electrolyte and explosion of the battery.

- Always comply with the polarity of batteries.

**Recycling**

Never discard, burn or open the buffer batteries or cells.

Use appropriate disposal procedures as recommended by the competent health and safety authorities.

Comply with the applicable local regulations while disposing of these items.

## 8.6 Replacing the batteries

The battery voltage test does not make it possible to determine whether only one of the batteries is discharged.

Always replace both batteries at the same time.

### 8.6.1 Preliminary operations

A. Prepare the batteries in workshop with the battery connection strand the batteries connection strands.
B. Open the maintenance door.
C. Turn off the terminal.

Failure to follow the power-off procedure before disconnecting the battery may result in the loss of stored data.

To avoid any writing data problem, wait a few seconds after the complete shutdown of the screen before disconnecting the battery.

### 8.6.2 Procedure

#### *8.6.2.1 Replacing the maintenance compartment battery*

A. Disconnect the battery strand (1) of the charger board located in the maintenance compartment.
B. Remove the used battery.

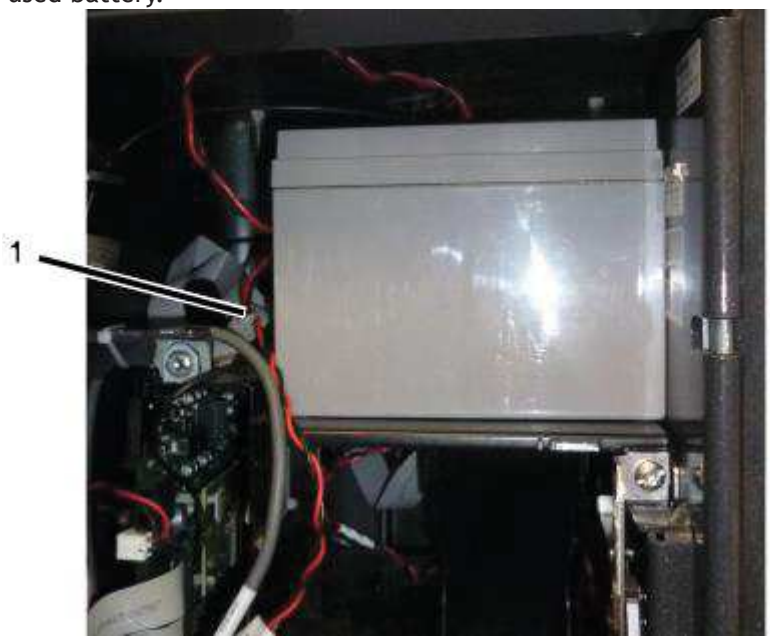


**Removing the battery**

#### *8.6.2.2 Installing the maintenance compartment battery*

A. Install the new and prepared battery terminals positioned at the rear.
B. Connect the battery strand to the charger board.

### *8.6.2.3 Replacing the floor fixation compartment battery*

A. Open the trapdoor of the floor fixation compartment.
B. Remove the protective cover from the battery located in the floor fixation compartment.

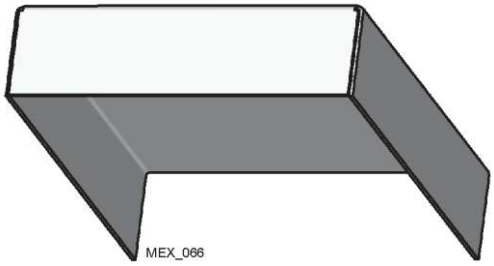


**Battery protective cover**

C. Disconnect the adapter strand (1) from the second battery strand (2).
D. Remove the battery (3) equipped with the adapter strand (1).

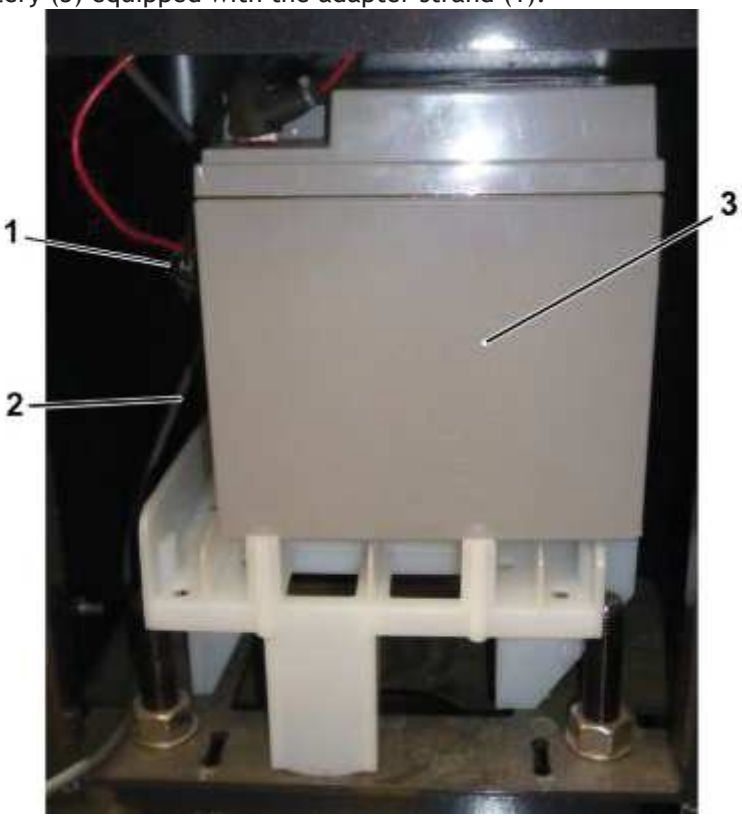


**Disconnecting the strands**

### *8.6.2.4 Installing the floor fixation compartment battery*

A. Install the new and charged battery terminals positioned at the rear., equipped with an adapter strand, orienting it so that the strand is on the left.
B. Connect the adapter strand of the second solar battery to the second solar battery strand located in the floor fixation compartment.
C. Put the protective cover back on the battery by inserting the strands through the open side at the back of the cover.

### *8.6.2.5 Final operations*

A. Close the trapdoor of the floor fixation compartment.
B. Turn on the terminal.
C. Close the maintenance door.
D. Print a control ticket.
E. Check the battery voltage.

## 8.7 Cleaning

### 8.7.1 Preliminary operations

Non applicable

### 8.7.2 Procedure

**NEVER USE:**

- a wire brush or steel wool, that can damage the surface coating,
- high-pressure water, that can damage the seals or cause water ingress,
- solvents on transparent materials (glass, etc.),
- pressurised air, to avoid deteriorations caused by projection of components (dust, sand, residues, etc.).

#### *8.7.2.1 Precautions regarding chemicals*

- Use protective equipment adapted to the cleaning agents used: chemical-resistant and impervious gloves, protective goggles, etc.
- If possible, rinse the cleaned surface with water.
- After use, recycle tools or containers that have been in contact with a chemical using the appropriate disposal procedures.

#### *8.7.2.2 Exterior cleaning*

The coating of the external surface allows an easy removal of graffiti and stickers.

A. Use soapy water to clean the external surfaces.
B. Rinse and dry after cleaning.
C. If soapy water is not efficient, carefully use solvent adapted to the material to clean.
Test the solvent beforehand on a small and discrete area.

**Instructions for specific elements:**

- **Never use** solvents with chlorine or bleach for elements made of **stainless steel or aluminium**.
- Exclusively use acetone to clean the solar panel.
- Exclusively use white gas or methylated spirits to clean the extended keyboard sticker.
- Exclusively use isopropyl alcohol to clean elements made of transparent polycarbonate (glasses, bowl flap, etc.).

#### *8.7.2.3 Interior cleaning*

A. Open the maintenance door.
B. Turn off the terminal .
C. Use a dry cloth.
D. If necessary, dust the elements with a dry cloth or a soft brush.

# 9. Warnings and failures

## 9.1 Green warning LED

A green flashing LED is an early warning signal that **does not** put the parking terminal out of order. It indicates that an intervention is required, for instance low ticket stock or low battery charge.

NOTE The green warning LED also blinks but less quickly to indicate that the terminal is operational even if the display is in standby mode.

**Display and cancellation of a warning:**

It is possible to view the **"DIAGNOSTICS"** code in hexadecimal corresponding to a warning or a failure without opening the maintenance door.

- Press simultaneously the "Cancellation" (red) and "Validation" (green) buttons on the keyboard.
- Hold the "Cancellation" button until the "Release change button" message appears.
- Press the "Validation" button as many times as necessary to put the cursor on the "Errors" function in the menu displayed.
- Press the "Cancellation" button to select the function.

The terminal displays the list of the 20 most recent defaults and failures.

You can also open the maintenance door and use the keyboard to select the onsite programming function **97**.

| Code | Warning message | Problem | Solution |
|---|---|---|---|
| **4003** | CHARGING BATTERY DEFAULT | The voltage of the battery is low when in operation. | Replace the battery. |
| **4004** | IDLE BATTERY DEFAULT | The voltage of the battery is low when idle. | Replace the battery. |
| **4005** | SUPPLY DEFAULT | The voltage of the battery is insufficient. | Replace the battery. |
| **4100** | COIN BOX FAILURE | The number of coins in the coin box exceeds the limit. | Collect the coins. |
| **4108** | PAYMENT BY COINS DEFAULT | The number of coins in the coin box exceeds the threshold. | Collect the coins. |
| **4206** | TICKET NUMBER BELOW | The number of remaining tickets is below the threshold set by function 14. | Replace the ticket roll or modify the threshold. |
| | | | |
| | | | |

After the intervention, use the "DIAGNOSTICS" function to cancel the warning message.

## 9.2 Red failure LED

A red flashing LED means that the terminal is out of order. Contact the technical service and provide the following information:

- failure code,
- failure message (the list below shows the most frequent),
- if possible, a control ticket.

**Display of a failure:**

It is possible to view the **"DIAGNOSTICS"** code in hexadecimal corresponding to a warning or a failure without opening the maintenance door.

- Press simultaneously the "Cancellation" (red) and "Validation" (green) buttons on the function keyboard or the extended keyboard.
- Hold the "Cancellation" button until the "Release change button" message appears.
- Press the "Validation" button as many times as necessary to put the cursor on the "Errors" function in the menu displayed.
- Press the "Cancellation" button to select the function.

The terminal displays the list of the 20 most recent defaults and failures.

You can also open the maintenance door and use the keyboard to select the onsite programming function **96**.

| Code | Failure message | Problem | Solution |
|---|---|---|---|
| **4000** | CHARGING BATTERY MEASUREMENT | The voltage of the buffer battery is too low when idle. | Replace the battery. |
| **4001** | IDLE BATTERY MEASUREMENT | The voltage of the buffer battery is too low when idle. | Replace the battery. |
| **4002** | SUPPLY FAILURE | The voltage of the battery is insufficient. | Replace the battery. |
| **4015** | PAYMENT FAILURE | No means of payment available. | Replace at least one means of payment. |
| **4101** | COIN BOX FAILURE | The coin box can no longer accept coins. | Collect the coins. |
| **4103** | END OF COLLECTION NOT REPORTED | Collection door not correctly closed. | Check that the doors are correctly closed. |
| **4200** | PRINTER FAILURE, CHANNEL FORWARD | Printer broken or out of order. | Check operation of the printer. |
| **4201** | PRINTER FAILURE, CHANNEL CUT | Printer broken or out of order. | Check operation of the printer. |
| **4202** | PRINTER FAILURE, SENSOR FORWARD | Printer broken or out of order. | Check operation of the printer. |
| **4203** | PRINTER FAILURE, SENSOR CUT | Printer broken or out of order. | Check operation of the printer. |
| **4204** | PRINTER OUT OF PAPER | No more tickets. | Replace the ticket roll. |
| **4205** | PRINTER FAILURE, MAIN BOARD DIALOGUE | Printer broken or out of order. | Check operation of the printer. |
| **4700** | BANKNOTE PAYMENT DEFAULT | Supply default | Check that the supply is well connected. |
| **4701** | READER INTEGRITY DEFAULT | An integrity problem of the reader software is detected. | Test the banknote reader. |

| | | | |
|---|---|---|---|
| **4702** | COMMUNICATION PROBLEM | Communication with the reader failed. | Test the banknote reader. |
| **4704** | INITIALISATION PROBLEM | Initialisation of the reader failed. | Test the banknote reader. |
| **4705** | COIN BOX FULL: PHYSICAL DETECTION | The reader detected that the stacker (coin box) was full. | Collect the banknotes. |
| **4708** | BAD END OF COLLECTION FAILURE | The collection ended badly. | Check closing of the collection door. |
| **4709** | BANKNOTE PAYMENT DEFAULT | Coin box not positioned properly. | Check the position of the coin box. |
| **470B** | BANKNOTE JAM DEFAULT | A banknote jam was detected in the reader area. | Check operation of the reader. |
| **470C** | BANKNOTE TRACTION MOTOR DEFAULT | An operating problem of the banknote traction motor was detected. | Check operation of the reader. |
| **4710** | COIN BOX REMOVED | The coin box is open or was removed. | Check that the coin box is closed and in position. |
| **7000** | DOOR OPEN TICKET FORBIDDEN | The door of the housing is open. | Check that the door of the housing is closed |
| **7001** | OBSTACLE DETECTED | Coin or object stuck in the selector | If change is not available, open the door of the housing and empty the coins conduit |

Data download is impossible when failures 4000, 4001, or 4002 occur.

## 9.3 Exchangeable coin box failure code

In case of exchangeable coin box failure:

- If the terminal is equipped with several means of payment, the collection failure LEDs are **green**. Payment by coins is impossible, but payment by card is available.
- If payment by coins is the only means of payment available, the respective LEDs are **red**.

| Code | Failure message | Problem | Solution |
|---|---|---|---|
| **9001** | MCB COMM. DEFAULT | Communication problem between the CP and the coin box. | Contact the technical service. |
| **9003** | MCB LOCK. DEFAULT | The coin box cannot lock the actuator. | Contact the technical service. |
| **9004** | MCB UNLOCK. DEFAULT | The coin box cannot unlock the actuator. | Contact the technical service. |
| **9005** | TM MCB DEFAULT | The coin box does is not detected although the trapdoor is closed. | End collection.<br>This failure is automatically cancelled when a collection ends correctly (coin box present and trapdoor closed). |
| **9006** | MCB SENSOR DEFAULT | The coin box sensors are faulty. | Contact the technical service. |
| **9007** | MCB TRAPDOOR DEFAULT | The trapdoor is not closed. | Contact the technical service. |
| **9008** | MCB PROG. DEFAULT | The coin box was not programmed correctly. | Contact the technical service. |
| **9009** | MCB FRAUD DEFAULT | The coin box sensors have changed states outside a collection sequence; a fraud attempt can be assumed. | Contact the technical service. |
| **900A** | MCB COLLECTION UNFINISHED DEFAULT | The main board supply was cut during a collection sequence. | Contact the technical service. |

# Notes

**© Copyright November 2017 Parkeon. All rights reserved**

Parkeon reserves all proprietary rights in the content of this document, the rights on use, reproduction, representation, marketing, translation, adaptation, modification and, more generally, exploitation, by any method, for any and all purposes countries and for the whole duration of protection. Any use of this document requires the prior written permission of Parkeon. Parkeon can make any changes to data, drawings or descriptions without notice. Some features may vary according to customer specifications and do not represent any commitment on Parkeon.

**Park***folio*, EPSUM are trademarks of Parkeon.

**Parkeon S.A.S.**
Parc La Fayette, 6 rue Isaac Newton, 25075 Besançon Cedex 9 - France
Phone: +33 (0)3 81 54 56 00 – Fax: +33 (0)3 81 54 49 96

Headquarters: 100 Avenue de Suffren, 75015 Paris - France
Phone: +33 (0)1 58 09 81 10 – Fax : +33 (0)1 58 09 81 49

Parkeon S.A.S capital of 30.382.146 euros
444 719 272 R.C.S. Paris
Printed in France.