1190
ILAC MRA

Specific Absorption Rate (SAR) Test Report
for
TEAMSHARP SPACETECH INC.
on the
Personal Tracking System

Report No.	:	FA5D2102-1-2-01
Trade Name	:	TEAMSHARP
Model Name	:	PT-300
FCC ID	:	T3B-PT300
Date of Testing	:	Feb. 22~24, 2006
Date of Report	:	Mar. 01, 2006
Date of Review	:	Mar. 01, 2006

- The test results refer exclusively to the presented test model/sample only.
- Without written approval of SPORTON International Inc., the test report shall not be reproduced except in full.
- Report Version: Rev.01

SPORTON International Inc.

6F, No.106, Sec. 1, Hsin Tai Wu Rd., Hsi Chih, Taipei Hsien, Taiwan, R.O.C.

©2006 SPORTON International Inc. SAR Testing Lab
This report shall not be reproduced except in full, without the written approval of Sporton.

Table of Contents

1. Statement of Compliance ---------- 1
2. Administration Data ---------- 2
2.1 Testing Laboratory ---------- 2
2.2 Detail of Applicant ---------- 2
2.3 Detail of Manufacturer ---------- 2
2.4 Application Detail ---------- 2
3. General Information ---------- 3
3.1 Description of Device Under Test (DUT) ---------- 3
3.2 Product Photo ---------- 4
3.3 Applied Standards: ---------- 5
3.4 Device Category and SAR Limits ---------- 6
3.5 Test Conditions: ---------- 6
3.5.1 Ambient Condition ---------- 6
3.5.2 Test Configuration ---------- 6
4. Specific Absorption Rate (SAR) ---------- 7
4.1 Introduction ---------- 7
4.2 SAR Definition ---------- 7
5. SAR Measurement Setup ---------- 8
5.1 DASY4 E-Field Probe System ---------- 9
5.1.1 ET3DV6 E-Field Probe Specification ---------- 10
5.1.2 ET3DV6 E-Field Probe Calibration ---------- 10
5.2 DATA Acquisition Electronics (DAE) ---------- 11
5.3 Robot ---------- 12
5.4 Measurement Server ---------- 12
5.5 SAM Twin Phantom ---------- 12
5.6 Device Holder for SAM Twin Phantom ---------- 14
5.7 Data Storage and Evaluation ---------- 15
5.7.1 Data Storage ---------- 15
5.7.2 Data Evaluation ---------- 15
5.8 Test Equipment List ---------- 18
6. Tissue Simulating Liquids ---------- 19
7. Uncertainty Assessment ---------- 21
8. SAR Measurement Evaluation ---------- 23
8.1 Purpose of System Performance check ---------- 23
8.2 System Setup ---------- 23
8.3 Validation Results ---------- 25
9. Description for DUT Testing Position ---------- 26
10. Measurement Procedures ---------- 31
11. SAR Test Results ---------- 33
11.1 Right Cheek ---------- 33
11.2 Right Tilted ---------- 33
11.3 Left Cheek ---------- 33
11.4 Left Tilted ---------- 34
11.5 Keypad Up with 1.5 cm Gap ---------- 34
11.6 Keypad Down with 1.5 cm Gap ---------- 34
12. References ---------- 35

©2006 SPORTON International Inc. SAR Testing Lab
This report shall not be reproduced except in full, without the written approval of Sporton.

Tel:886-22696-2468
Fax:886-2-2696-2255

Appendix A - System Performance Check Data
Appendix B - SAR Measurement Data
Appendix C - Calibration Data

©2006 SPORTON International Inc. SAR Testing Lab
This report shall not be reproduced except in full, without the written approval of Sporton.

Tel:886-22696-2468
Fax:886-2-2696-2255

1. Statement of Compliance

The Specific Absorption Rate (SAR) maximum results found during testing for the **TEAMSHARP SPACETECH INC. Personal Tracking System TEAMSHARP PT-300** are as follows (with expanded uncertainty 20.6%):

GSM head (W/kg)	GSM body (W/kg)	PCS head (W/kg)	PCS body (W/kg)
0.684	**0.35**	**1.01**	**0.263**

They are in compliance with Specific Absorption Rate (SAR) for general population/uncontrolled exposure limits specified in FCC 47 CFR part 2 (2.1093) and ANSI/IEEE C95.1-1999 and had been tested in accordance with the measurement methods and procedures specified in OET Bulletin 65 Supplement C (Edition 01-01).

Approved by

Dr. Daniel Lee
EMC/SAR Director

©2006 SPORTON International Inc. SAR Testing Lab
This report shall not be reproduced except in full, without the written approval of Sporton.

2. Administration Data

2.1 Testing Laboratory

Company Name : Sporton International Inc.
Department : Antenna Design/SAR
Address : No.52, Hwa-Ya 1st RD., Hwa Ya Technology Park, Kwei-Shan Hsiang, TaoYuan Hsien, Taiwan, R.O.C.
Telephone Number : 886-3-327-3456
Fax Number : 886-3-327-0973

2.2 Detail of Applicant

Company Name : TEAMSHARP SPACETECH INC.
Address : No. 7, Sun-Hwa Sec., Chung-Cheng Road, Lung-Tan, Taoyuan 325, Taiwan, R.O.C.
Telephone Number : +886-3-4994049
Contact Parson : John HO / tsst@ms19.hinet.net

2.3 Detail of Manufacturer

Company Name : TEAMSHARP SPACETECH INC.
Address : No. 7, Sun-Hwa Sec., Chung-Cheng Road, Lung-Tan, Taoyuan 325, Taiwan, R.O.C.

2.4 Application Detail

Date of reception of application: Dec. 21, 2006
Start of test : Feb. 22, 2006
End of test : Feb. 24, 2006

©2006 SPORTON International Inc. SAR Testing Lab
This report shall not be reproduced except in full, without the written approval of Sporton.

3. General Information

3.1 Description of Device Under Test (DUT)

DUT Type :	Personal Tracking System
Trade Name :	TEAMSHARP
Model Name :	PT-300
FCC ID :	T3B-PT300
Tx Frequency :	GSM850: 824 ~ 849 MHz PCS1900: 1850 ~ 1910 MHz
Rx Frequency :	GSM850: 869 ~ 894 MHz PCS1900: 1930 ~ 1990 MHz
Maximum Output Power to Antenna :	GSM850: 31.78 dBm PCS1900: 28.89 dBm
Antenna Type :	Fixed External
HW Version :	V3.2
SW Version :	V2.2
Type of Modulation :	GMSK
DUT Stage :	Production Unit
Power Rating :	3.8V / 1300mA
Application Type :	Certification

©2006 SPORTON International Inc. SAR Testing Lab
This report shall not be reproduced except in full, without the written approval of Sporton.

3.2 Product Photo

3.3 Applied Standards:

The Specific Absorption Rate (SAR) testing specification, method and procedure for this Personal Tracking System is in accordance with the following standards:

47 CFR Part 2 (2.1093),
IEEE C95.1-1999,
IEEE C95.3-2002,
IEEE P1528-2003, and
OET Bulletin 65 Supplement C (Edition 01-01)

©2006 SPORTON International Inc. SAR Testing Lab
This report shall not be reproduced except in full, without the written approval of Sporton.

3.4 Device Category and SAR Limits

This device belongs to portable device category because its radiating structure is allowed to be used within 20 centimeters of the body of the user.

Limit for General Population/Uncontrolled exposure should be applied for this device, it is 1.6 W/kg as averaged over any 1 gram of tissue.

3.5 Test Conditions:

3.5.1 Ambient Condition

Item	HSL_850	MSL_850	HSL_1900	MSL_1900
Ambient Temperature (°C)	20-24℃			
Tissue simulating liquid temperature (°C)	20.0℃	21.0℃	20.0℃	21.3℃
Humidity (%)	<60 %			

3.5.2 Test Configuration

The device was controlled by using a base station emulator R&S CMU200. Communication between the device and the emulator was established by air link. The distance between the DUT and the antenna of the emulator is larger than 50 cm and the output power radiated from the emulator antenna is at least 30 dB smaller than the output power of DUT.

Measurements were performed on the lowest, middle, and highest channel for each testing position for head SAR testing. Measurements were performed only on the middle channel if the SAR is below 3 dB of limit for body SAR testing.

The DUT was set from the emulator to radiate maximum output power during all testings.

For head SAR testing, EUT is in GSM link mode, and its crest factor is 8.3. For body SAR testing, EUT is in GPRS link mode, and its crest factor is 8.3 because EUT is GPRS class 8 device.

©2006 SPORTON International Inc. SAR Testing Lab
This report shall not be reproduced except in full, without the written approval of Sporton.

4. Specific Absorption Rate (SAR)

4.1 Introduction

SAR is related to the rate at which energy is absorbed per unit mass in an object exposed to a radio field. The SAR distribution in a biological body is complicated and is usually carried out by experimental techniques or numerical modeling. The standard recommends limits for two tiers of groups, occupational/controlled and general population/uncontrolled, based on a person's awareness and ability to exercise control over his or her exposure. In general, occupational/controlled exposure limits are higher than the limits for general population/uncontrolled.

4.2 SAR Definition

The SAR definition is the time derivative (rate) of the incremental energy (dW) absorbed by (dissipated in) an incremental mass (dm) contained in a volume element (dv) of a given density.
ρ). The equation description is as below:

$$\textbf{SAR} = \frac{d}{dt}\left(\frac{dW}{dm}\right) = \frac{d}{dt}\left(\frac{dW}{\rho dv}\right)$$

SAR is expressed in units of Watts per kilogram (W/kg)

SAR measurement can be either related to the temperature elevation in tissue by

$$\textbf{SAR} = C\frac{\delta T}{\delta t}$$

, where C is the specific head capacity, δT is the temperature rise and δt the exposure duration,

or related to the electrical field in the tissue by

$$\textbf{SAR} = \frac{\sigma |E|^2}{\rho}$$

, where σ is the conductivity of the tissue, ρ is the mass density of the tissue and ***E*** is the rms electrical field strength.

However for evaluating SAR of low power transmitter, electrical field measurement is typically applied.

5. SAR Measurement Setup

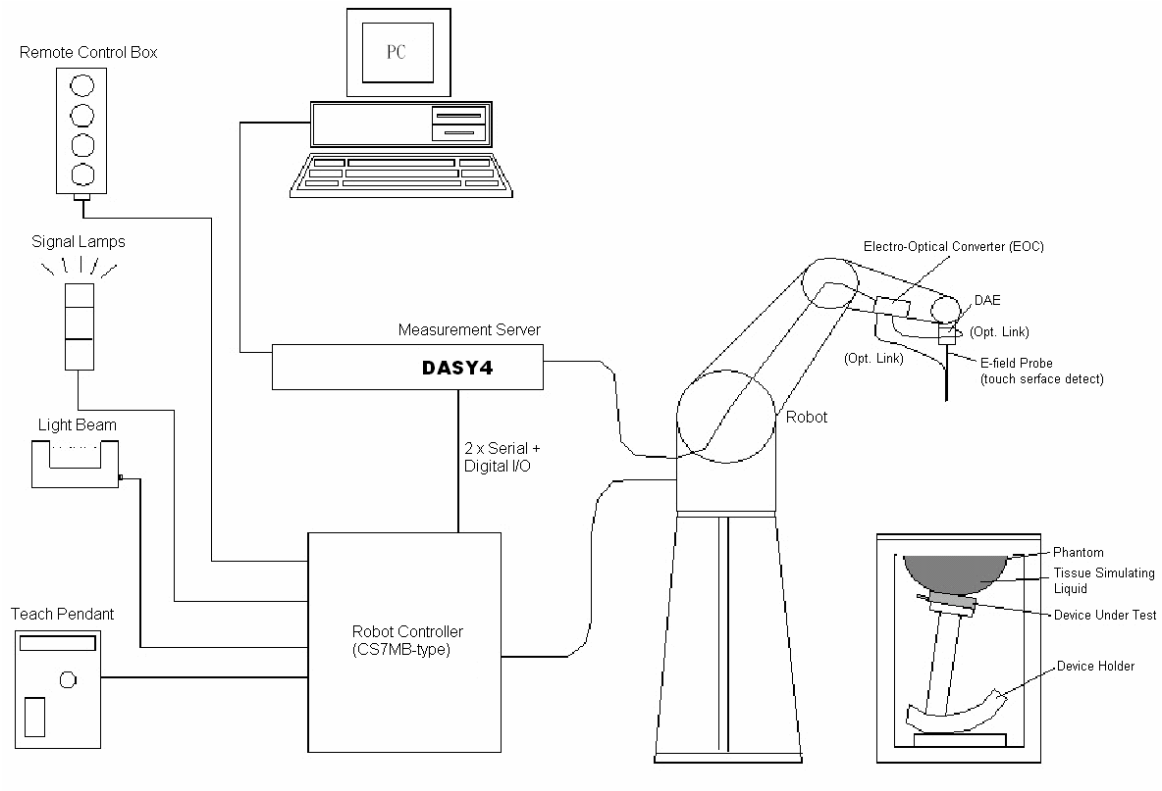

Fig. 5.1 DASY4 system

The DASY4 system for performance compliance tests is illustrated above graphically. This system consists of the following items:

- A standard high precision 6-axis robot with controller, a teach pendant and software
- A data acquisition electronic (DAE) attached to the robot arm extension
- A dosimetric probe equipped with an optical surface detector system
- The electro-optical converter (ECO) performs the conversion between optical and electrical signals
- A measurement server performs the time critical tasks such as signal filtering, control of the robot operation and fast movement interrupts.
- A probe alignment unit which improves the accuracy of the probe positioning
- A computer operating Windows XP
- DASY4 software
- Remove control with teach pendant and additional circuitry for robot safety such as warming lamps, etc.
- The SAM twin phantom
- A device holder
- Tissue simulating liquid
- Dipole for evaluating the proper functioning of the system

Some of the components are described in details in the following sub-sections.

5.1 DASY4 E-Field Probe System

The SAR measurement is conducted with the dosimetric probe ET3DV6 (manufactured by SPEAG).The probe is specially designed and calibrated for use in liquid with high permittivity. The dosimetric probe has special calibration in liquid at different frequency. This probe has a built in optical surface detection system to prevent from collision with phantom.

©2006 SPORTON International Inc. SAR Testing Lab
This report shall not be reproduced except in full, without the written approval of Sporton.

5.1.1 ET3DV6 E-Field Probe Specification

Construction	Symmetrical design with triangular core Built-in optical fiber for surface detection system Built-in shielding against static charges PEEK enclosure material (resistant to organic solvents)
Calibration	Simulating tissue at frequencies of 900MHz, 1.8GHz and 2.45GHz for brain and muscle (accuracy ±8%)
Frequency	10 MHz to > 3 GHz
Directivity	± 0.2 dB in brain tissue (rotation around probe axis) ± 0.4 dB in brain tissue (rotation perpendicular to probe axis)
Dynamic Range	5 μ W/g to > 100mW/g; Linearity: ±0.2dB
Surface Detection	± 0.2 mm repeatability in air and clear liquids on reflecting surface
Dimensions	Overall length: 330mm Tip length: 16mm Body diameter: 12mm Tip diameter: 6.8mm Distance from probe tip to dipole centers: 2.7mm
Application	General dosimetry up to 3GHz Compliance tests for mobile phones and Wireless LAN Fast automatic scanning in arbitrary phantoms

Fig. 5.2 Probe setup on robot

5.1.2 ET3DV6 E-Field Probe Calibration

Each probe needs to be calibrated according to a dosimetric assessment procedure with accuracy better than ± 10%. The spherical isotropy shall be evaluated and within ± 0.25dB. The sensitivity parameters (NormX, NormY, and NormZ), the diode compression parameter (DCP) and the conversion factor (ConvF) of the probe are tested. The calibration data are as below:

©2006 SPORTON International Inc. SAR Testing Lab
This report shall not be reproduced except in full, without the written approval of Sporton.

Sensitivity	X axis : 1.68 µV		Y axis : 1.70 µV	Z axis : 1.74 µV
Diode compression point	X axis : 94 mV		Y axis : 94 mV	Z axis : 94 mV
Conversion factor (Head / Body)	**Frequency (MHz)**	**X axis**	**Y axis**	**Z axis**
	735~935	6.74 / 6.53	6.74 / 6.53	6.74 / 6.53
	1800~2000	5.16 / 4.56	5.16 / 4.56	5.16 / 4.56
Boundary effect (Head / Body)	**Frequency (MHz)**	**Alpha**	**Depth**	
	735~935	1.12 / 1.04	1.42 / 1.52	
	1800~2000	0.55 / 0.55	2.42 / 2.82	

NOTE:

- The probe parameters have been calibrated by the SPEAG.

5.2 DATA Acquisition Electronics (DAE)

The data acquisition electronics (DAE) consists of a highly sensitive electrometer-grade preamplifier with auto-zeroing, a channel and gain-switching multiplexer, a fast 16 bit AD-converter and a command decoder and control logic unit. Transmission to the measurement server is accomplished through an optical downlink for data and status information as well as an optical uplink for commands and the clock.

The mechanical probe mounting device includes two different sensor systems for frontal and sideways probe contacts. They are used for mechanical surface detection and probe collision detection.

The input impedance of the DAE is 200M Ohm; the inputs are symmetrical and floating. Common mode rejection is above 80dB.

©2006 SPORTON International Inc. SAR Testing Lab
This report shall not be reproduced except in full, without the written approval of Sporton.

5.3 Robot

The DASY4 system uses the high precision robots RX90BL type out of the newer series from Stäubli SA (France). For the 6-axis controller DASYS system, the CS7MB robot controller version from Stäubli is used. The RX robot series have many features that are important for our application:

- High precision (repeatability 0.02 mm)
- High reliability (industrial design)
- Jerk-free straight movements
- Low ELF interference (the closed metallic construction shields against motor control fields)
- 6-axis controller

5.4 Measurement Server

The DASY4 measurement server is based on a PC/104 CPU board with
166 MHz CPU
32 MB chipset and
64 MB RAM.

Communication with
the DAE4 electronic box
the 16-bit AD-converter system for optical detection and digital I/O interface.

The measurement server performs all the real-time data evaluation for field measurements and surface detection, controls robot movements and handles safety operations.

5.5 SAM Twin Phantom

The SAM twin phantom is a fiberglass shell phantom with 2mm shell thickness (except the ear region where shell thickness increases to 6mm). It has three measurement areas:

- Left head
- Right head
- Flat phantom

The bottom plate contains three pair of bolts for locking the device holder. The device holder positions are adjusted to the standard measurement positions in the three sections.

A white cover is provided to tap the phantom during off-periods to prevent water evaporation and changes in the liquid parameters.

©2006 SPORTON International Inc. SAR Testing Lab
This report shall not be reproduced except in full, without the written approval of Sporton.

On the phantom top, three reference markers are provided to identify the phantom position with respect to the robot.

The phantom can be used with the following tissue simulating liquids:
*Water-sugar based liquid
*Glycol based liquids

Fig. 5.3 Top view of twin phantom

Fig. 5.4 Bottom view of twin phantom

©2006 SPORTON International Inc. SAR Testing Lab
This report shall not be reproduced except in full, without the written approval of Sporton.

5.6 Device Holder for SAM Twin Phantom

The SAR in the Phantom is approximately inversely proportional to the square of the distance between the source and the liquid surface. For a source in 5 mm distance, a positioning uncertainty of ±0.5mm would produce a SAR uncertainty of ± 20%. An accurate device position is therefore crucial for accurate and repeatable measurement. The position in which the devices must be measured, are defined by the standards.

The DASY device holder is designed to cope with different positions given in the standard. It has two scales for the device rotation (with respect to the body axis) and the device inclination (with respect to the line between the ear reference points). The rotation centers for both scales is the ear reference point (EPR).
Thus the device needs no repositioning when changing the angles.

The DASY device holder has been made out of low-loss POM material having the following dielectric parameters: relative permittivity ε_r=3 and loss tangent δ = 0.02. The amount of dielectric material has been reduced in the closest vicinity of the device, since measurements have suggested that the influence of the clamp on the test results could thus be lowered.

Fig. 5.5 Device Holder

5.7 Data Storage and Evaluation

5.7.1 Data Storage

The DASY4 software stores the assessed data from the data acquisition electronics as raw data (in microvolt readings from the probe sensors), together with all the necessary software parameters for the data evaluation (probe calibration data, liquid parameters and device frequency and modulation data) in measurement files with the extension .DA4. The postprocessing software evaluates the desired unit and format for output each time the data is visualized or exported. This allows verification of the complete software setup even after the measurement and allows correction of erroneous parameter settings. For example, if a measurement has been performed with an incorrect crest factor parameter in the device setup, the parameter can be corrected afterwards and the data can be reevaluated.

The measured data can be visualized or exported in different units or formats, depending on the selected probe type (e.g., [V/m], [A/m], [mW/g]). Some of these units are not available in certain situations or give meaningless results, e.g., a SAR-output in a loseless media, will always be zero. Raw data can also be exported to perform the evaluation with other software packages.

5.7.2 Data Evaluation

The DASY4 postprocessing software (SEMCAD) automatically executes the following procedures to calculate the field units from the microvolt readings at the probe connector. The parameters used in the evaluation are stored in the configuration modules of the software：

Probe parameters：	- Sensitivity	$Norm_i$, a_{i0}, a_{i1}, a_{i2}
	- Conversion factor	$ConvF_i$
	- Diode compression point	dcp_i
Device parameters：	- Frequency	f
	- Crest factor	cf
Media parameters：	- Conductivity	σ
	- Density	ρ

These parameters must be set correctly in the software. They can be found in the component documents or they can be imported into the software from the configuration files issued for the DASY components. In the direct measuring mode of the multimeter option, the parameters of the actual system setup are used. In the scan visualization and export modes, the parameters stored in the corresponding document files are used.
The first step of the evaluation is a linearization of the filtered input signal to account for the compression characteristics of the detector diode. The compensation depends on the input signal, the diode type and the DC-transmission factor from the diode to the evaluation electronics. If the exciting field is pulsed, the crest factor of the signal must be known to correctly compensate for peak power. The formula for each channel

can be given as：

$$Vi = U_i + U_i^2 \cdot \frac{cf}{dcp_i}$$

with ***V_i = compensated signal of channel i (i = x, y, z)***
U_i = input signal of channel i (i = x, y, z)
cf = crest factor of exciting field (DASY parameter)
dcp_i = diode compression point (DASY parameter)

From the compensated input signals, the primary field data for each channel can be evaluated：

E-field probes： $E_i = \sqrt{\frac{V_i}{Norm_i ConvF}}$

H-field probes： $H_i = \sqrt{V_i} \frac{a_{i0+} a_{i1} f + a_{i2} f^2}{f}$

with ***V_i*** = compensated signal of channel *i* (*i* = x, y, z)
$Norm_i$ = sensor sensitivity of channel i (*i* = x, y, z)
μ V/(V/m)2 for E-field Probes
ConvF = sensitivity enhancement in solution
a_{ij} = sensor sensitivity factors for H-field probes
f = carrier frequency [GHz]
E_i = electric field strength of channel *i* in V/m
H_i = magnetic field strength of channel *i* in A/m

The RSS value of the field components gives the total field strength (Hermitian magnitude)：

$$E_{tot} = \sqrt{E_X^2 + E_Y^2 + E_Z^2}$$

The primary field data are used to calculate the derived field units.

$$\text{SAR} = E_{tot}^2 \cdot \frac{\sigma}{\rho \cdot 1000}$$

with ***SAR*** = local specific absorption rate in mW/g
Etot = total field strength in V/m
σ = conductivity in [mho/m] or [Siemens/m]
ρ = equivalent tissue density in g/cm^3

©2006 SPORTON International Inc. SAR Testing Lab
This report shall not be reproduced except in full, without the written approval of Sporton.

＊Note that the density is set to 1, to account for actual head tissue density rather than the density of the tissue simulating liquid.

The power flow density is calculated assuming the excitation field to be a free space field.

$$P_{pwe} = \frac{E_{tot}^2}{3770} \quad \text{or} \quad P_{pwe} = H_{tot}^2 \cdot 37.7$$

with P_{pwe} = equivalent power density of a plane wave in mW/cm^2
E_{tot} = total electric field strength in V/m
H_{tot} = total magnetic field strength in A/m

©2006 SPORTON International Inc. SAR Testing Lab
This report shall not be reproduced except in full, without the written approval of Sporton.

5.8 Test Equipment List

Manufacture	Name of Equipment	Type/Model	Serial Number	Calibration	
				Last Cal.	Due Date
SPEAG	Dosimetric E-Filed Probe	ET3DV6	1788	Sep. 30, 2004	Sep. 30, 2006
SPEAG	900MHz System Validation Kit	D900V2	190	Jul. 19, 2005	Jul. 19, 2007
SPEAG	1800MHz System Validation Kit	D1800V2	2d076	Jul. 20, 2005	Jul. 20, 2007
SPEAG	2450MHz System Validation Kit	D2450V2	736	Feb. 10, 2005	Feb. 10, 2007
SPEAG	Data Acquisition Electronics	DAE3	577	Nov. 11, 2005	Nov. 11, 2006
SPEAG	Device Holder	N/A	N/A	NCR	NCR
SPEAG	Phantom	QD 000 P40 C	TP-1150	NCR	NCR
SPEAG	Robot	Staubli RX90BL	F03/5W15A1/A/01	NCR	NCR
SPEAG	Software	DASY4 V4.6 Build 23	N/A	NCR	NCR
SPEAG	Software	SEMCAD V1.8 Build 160	N/A	NCR	NCR
SPEAG	Measurement Server	SE UMS 001 BA	1021	NCR	NCR
Agilent	S-Parameter Network Analyzer (PNA)	E8358A	US40260131	Sep. 16, 2005	Sep. 16, 2006
Agilent	Dielectric Probe Kit	85070D	US01440205	NCR	NCR
Agilent	Dual Directional Coupler	778D	50422	NCR	NCR
Agilent	Power Amplifier	8449B	3008A01917	NCR	NCR
R & S	Radio Communication Tester	CMU200	105934	Aug. 24, 2004	Aug. 24, 2006
Agilent	Power Meter	E4416A	GB41292344	Jan. 23, 2006	Jan. 23, 2008

Table 5.1 Test Equipment List

©2006 SPORTON International Inc. SAR Testing Lab
This report shall not be reproduced except in full, without the written approval of Sporton.

6. Tissue Simulating Liquids

For the measurement of the field distribution inside the SAM phantom with DASY4, the phantom must be filled with around 25 liters of homogeneous tissue simulating liquid. The liquid height from the ear reference point (ERP) of the phantom to the liquid top surface is (head SAR)or from the flat phantom to the liquid top surface (body SAR) is 15.2cm.

The following ingredients for tissue simulating liquid are used:

- **Water**: deionized water (pure H_20), resistivity $\geqq$16MΩ- as basis for the liquid
- **Sugar**: refined sugar in crystals, as available in food shops – to reduce relative permittivity
- **Salt**: pure NaCl – to increase conductivity
- **Cellulose**: Hydroxyethyl-cellulose, medium viscosity (75-125 mPa.s, 2% in water, 20°C), CAS#54290-to increase viscosity and to keep sugar in solution.
- **Preservative**: Preventol D-7 Bayer AG, D-51368 Leverkusen, CAS#55965-84-9- to prevent the spread of bacteria and molds.
- **DGMBE**: Deithlenglycol-monobuthyl ether (DGMBE), Fluka Chemie GmbH, CAS#112-34-5 – to reduce relative permittivity.

Table 6.1 gives the recipes for one liter of head and body tissue simulating liquid for frequency band 835MHz and 1900 MHz.

Ingredient	HSL-850	MSL-850	HSL-1900	MSL-1900
Water	532.98 g	631.68 g	552.42 g	716.56 g
Cellulose	0 g	0 g	0 g	0 g
Salt	18.3 g	11.72 g	3.06 g	4.0 g
Preventol D-7	2.4 g	1.2 g	0 g	0 g
Sugar	766.0 g	600.0 g	0 g	0 g
DGMBE	0 g	0 g	444.52 g	300.67 g
Total amount	1 liter (1.3 kg)	1 liter	1 liter (1.0 kg)	1 liter (1.0 kg)
Dielectric Parameters at 22°	f = 835 MHz ε_r= 41.5±5%, σ = 0.9±5% S/m	f = 835 MHz ε_r= 55.2±5%, σ = 0.97±5% S/m	f= 1900 MHz ε_r= 40.0±5%, σ = 1.4±5% S/m	f= 1900 MHz ε_r= 53.3±5 %, σ = 1.52±5% S/m

Table 6.1

The dielectric parameters of the liquids were verified prior to the SAR evaluation using an Agilent 85070D Dielectric Probe Kit and an Agilent E8358A Network Analyzer.

Table 6.2 shows the measuring results for head and muscle simulating liquid.

	Bands	Frequency(MHz)	Permittivity (ε_r)	Conductivity (σ)	Measurement Date
Head	GSM 850 band (824 ~ 849 MHz)	824.2	41.2	0.901	Feb. 22, 2006
		836.4	41.0	0.913	
		848.8	40.9	0.926	
Body	GSM 850 band (824 ~ 849 MHz)	824.2	53.9	0.927	Feb. 23, 2006
		836.6	53.8	0.94	
		848.8	53.7	0.953	
Head	PCS 1900 band (1850 ~ 1910 MHz)	1850.2	39.3	1.42	Feb. 22, 2006
		1880.0	39.1	1.44	
		1909.8	39.0	1.46	
Body	PCS 1900 band (1850 ~ 1910 MHz)	1850.2	52.8	1.53	Feb. 24, 2006
		1880.0	52.7	1.56	
		1909.8	52.7	1.59	

Table 6.2

The measuring data are consistent with ε_r = 41.5±5% and σ = 0.9±5% for head GSM 850 band and ε_r = 55.2 ± 5% and σ = 0.97 ± 5% for body GSM 850 band and ε_r = 40.0 ± 5% and σ = 1.4 ± 5% for head PCS 1900 band and ε_r = 53.3 ± 5% and σ = 1.52 ± 5% for body PCS 1900 band.

©2006 SPORTON International Inc. SAR Testing Lab
This report shall not be reproduced except in full, without the written approval of Sporton.

7. Uncertainty Assessment

The component of uncertainly may generally be categorized according to the methods used to evaluate them. The evaluation of uncertainly by the statistical analysis of a series of observations is termed a Type A evaluation of uncertainty. The evaluation of uncertainty by means other than the statistical analysis of a series of observation is termed a Type B evaluation of uncertainty. Each component of uncertainty, however evaluated, is represented by an estimated standard deviation, termed standard uncertainty, which is determined by the positive square root of the estimated variance.

A Type A evaluation of standard uncertainty may be based on any valid statistical method for treating data. This includes calculating the standard deviation of the mean of a series of independent observations; using the method of least squares to fit a curve to the data in order to estimate the parameter of the curve and their standard deviations; or carrying out an analysis of variance in order to identify and quantify random effects in certain kinds of measurement.

A type B evaluation of standard uncertainty is typically based on scientific judgment using all of the relevant information available. These may include previous measurement data, experience and knowledge of the behavior and properties of relevant materials and instruments, manufacture's specification, data provided in calibration reports and uncertainties assigned to reference data taken from handbooks. Broadly speaking, the uncertainty is either obtained from an outdoor source or obtained from an assumed distribution, such as the normal distribution, rectangular or triangular distributions indicated in Table 7.1

Uncertainty Distributions	Normal	Rectangular	Triangular	U-shape
Multiplying factor[(a)]	1/k (b)	$1/\sqrt{3}$	$1/\sqrt{6}$	$1/\sqrt{2}$

(a) standard uncertainty is determined as the product of the multiplying factor and the estimated range of variations in the measured quantity

(b) κ is the coverage factor

Table 7.1

The combined standard uncertainty of the measurement result represents the estimated standard deviation of the result. It is obtained by combining the individual standard uncertainties of both Type A and Type B evaluation using the usual "root-sum-squares" (RSS) methods of combining standard deviations by taking the positive square root of the estimated variances.

Expanded uncertainty is a measure of uncertainty that defines an interval about the measurement result within which the measured value is confidently believed to lie. It is obtained by multiplying the combined standard uncertainty by a coverage factor. Typically, the coverage factor ranges from 2 to 3. Using a coverage factor allows the true value of a measured quantity to be specified with a defined probability within the specified uncertainty range. For purpose of this document, a coverage factor two is used, which corresponds to confidence interval of about 95 %. The DASY4 uncertainty Budget is showed in Table 7.2.

©2006 SPORTON International Inc. SAR Testing Lab
This report shall not be reproduced except in full, without the written approval of Sporton.

Error Description	Uncertainty Value ± %	Probability Distribution	Divisor	C_i 1g	Standard Unc. (1-g)	v_i or V_{eff}
Measurement System						
Probe Calibration	± 4.8	Normal	1	1	±4.8	∞
Axial Isotropy	± 4.7	Rectangular	√3	$(1-Cp)^{1/2}$	±1.9	∞
Hemispherical Isotropy	± 9.6	Rectangular	√3	$(Cp)^{1/2}$	±3.9	∞
Boundary Effect	± 1.0	Rectangular	√3	1	±0.6	∞
Linearity	± 4.7	Rectangular	√3	1	±2.7	∞
System Detection Limit	± 1.0	Rectangular	√3	1	±0.6	∞
Readout Electronics	± 1.0	Rectangular	1	1	±1.0	∞
Response Time	± 0.8	Normal	√3	1	± 0.5	∞
Integration time	±2.6	Rectangular	√3	1	±1.5	∞
RF Ambient Conditions	± 3.0	Rectangular	√3	1	±1.7	∞
Probe Positioner Mech. Tolerance	± 0.4	Rectangular	√3	1	±0.2	∞
Probe Positioning with respect to Phantom Shell	± 2.9	Rectangular	√3	1	±1.7	∞
Extrapolation and Interpolation Algorithms for Max. SAR Evaluation	± 1.0	Rectangular	√3	1	±0.6	∞
Test sample Related						
Test sample Positioning	±2.9	Normal	1	1	±2.9	145
Device Holder Uncertainty	±3.6	Normal	1	1	±3.6	5
Output Power Variation-SAR drift measurement	±2.5	Rectangular	√3	1	±1.4	∞
Phantom and Tissue parameters						
Phantom uncertainty(Including shap and thickness tolerances)	±4.0	Rectangular	√3	1	±2.3	∞
Liquid Conductivity Target tolerance	±5.0	Rectangular	√3	0.64	±1.8	∞
Liquid Conductivity measurement uncertainty	±2.5	Normal	1	0.64	±1.6	∞
Liquid Permittivity Target tolerance	±5.0	Rectangular	√3	0.6	±1.7	∞
Liquid Permittivity measurement uncertainty	±2.0	Normal	1	0.6	±1.2	∞
Combined standard uncertainty					±10.3	330
Coverage Factor for 95 %		K=2				
Expanded uncertainty (Coverage factor = 2)					**±20.6**	

Table 7.2 Uncertainty Budget of DASY

8. SAR Measurement Evaluation

Each DASY system is equipped with one or more system validation kits. These units, together with the predefined measurement procedures within the DASY software, enable the user to conduct the system performance check and system validation. System validation kit includes a dipole, tripod holder to fix it underneath the flat phantom and a corresponding distance holder.

8.1 Purpose of System Performance check

The system performance check verifies that the system operates within its specifications. System and operator errors can be detected and corrected. It is recommended that the system performance check be performed prior to any usage of the system in order to guarantee reproducible results. The system performance check uses normal SAR measurements in a simplified setup with a well characterized source. This setup was selected to give a high sensitivity to all parameters that might fail or vary over time. The system check does not intend to replace the calibration of the components, but indicates situations where the system uncertainty is exceeded due to drift or failure.

8.2 System Setup

In the simplified setup for system evaluation, the DUT is replaced by a calibrated dipole and the power source is replaced by a continuous wave which comes from a signal generator at frequency 900 and 1800 MHz. The calibrated dipole must be placed beneath the flat phantom section of the SAM twin phantom with the correct distance holder. The distance holder should touch the phantom surface with a light pressure at the reference marking and be oriented parallel to the long side of the phantom. The equipment setup is shown below:

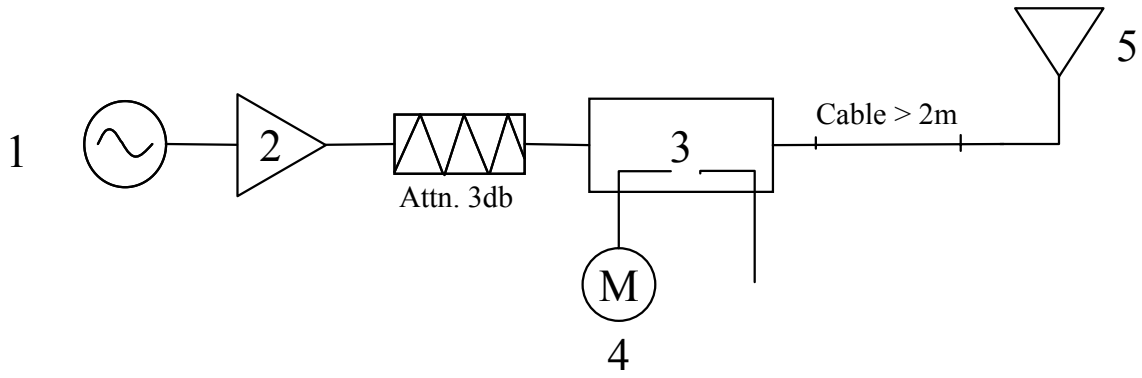

Fig. 8.1

1. Signal Generator
2. Amplifier
3. Directional Coupler
4. Power Meter
5. 900 MHz and 1800 MHz Dipole

The output power on dipole port must be calibrated to 20dBm (100mW) before dipole is connected.

Fig 8.2 Dipole Setup

©2006 SPORTON International Inc. SAR Testing Lab
This report shall not be reproduced except in full, without the written approval of Sporton.

8.3 Validation Results

Comparing to the original SAR value provided by Speag, the validation data should be within its specification of 10 %. Table 8.1 shows the target SAR and measured SAR after normalized to 1W input power.

		Target (W/kg)	Measurement data (W/kg)	Variation	Measurement Date
GSM 850 band (900MHz) for head	SAR (1g)	9.96	10.8	0.0 %	Feb. 22, 2006
	SAR (10g)	6.48	6.87	-1.0 %	
GSM 850 band (900MHz) for body	SAR (1g)	10.3	11.2	3.7 %	Feb. 23, 2006
	SAR (10g)	6.76	7.38	6.0 %	
PCS 1900 band (1800MHz) for head	SAR (1g)	41.6	38	-0.8 %	Feb. 22, 2006
	SAR (10g)	21.6	20	-1.5 %	
PCS 1900 band (1800MHz) for body	SAR (1g)	42	41.8	8.0 %	Feb. 24, 2006
	SAR (10g)	22	22.2	6.2 %	

Table 8.1

The table above indicates the system performance check can meet the variation criterion.

©2006 SPORTON International Inc. SAR Testing Lab
This report shall not be reproduced except in full, without the written approval of Sporton.

9. Description for DUT Testing Position

This DUT was tested in 6 different positions. They are left cheek, left tilted, right cheek, right tilted, body worn with keypad up and body worn with keypad down as illustrated below:

1) " Cheek Position"
   i) To position the device with the vertical center line of the body of the device and the horizontal line crossing the center piece in a plane parallel to the sagittal plane of the phantom. While maintaining the device in this plane, align the vertical center line with the reference plane containing the three ear and mouth reference point (M, RE and LE) and align the center of the ear piece with the line RE-LE.
   ii) To move the device towards the phantom with the ear piece aligned with the line LE-RE until the phone touched the ear. While maintaining the device in the reference plane and maintaining the phone contact with the ear, move the bottom of the phone until any point on the front side is in contact with the cheek of the phantom or until contact with the ear is lost (see Fig. 9.1).

2) " Tilted Position"
   i) To position the device in the "cheek" position described above.
   ii) While maintaining the device the reference plane described above and pivoting against the ear, move it outward away from the mouth by an angle of 15 degrees or until contact with the ear is lost (see Fig. 9.2).

3) " Body Worn"
   i) To position the device parallel to the phantom surface with either keypad up or down.
   ii) To adjust the phone parallel to the flat phantom.
   iii) To adjust the distance between the phone top/bottom surface and the flat phantom to 1.5 cm.

©2006 SPORTON International Inc. SAR Testing Lab
This report shall not be reproduced except in full, without the written approval of Sporton.

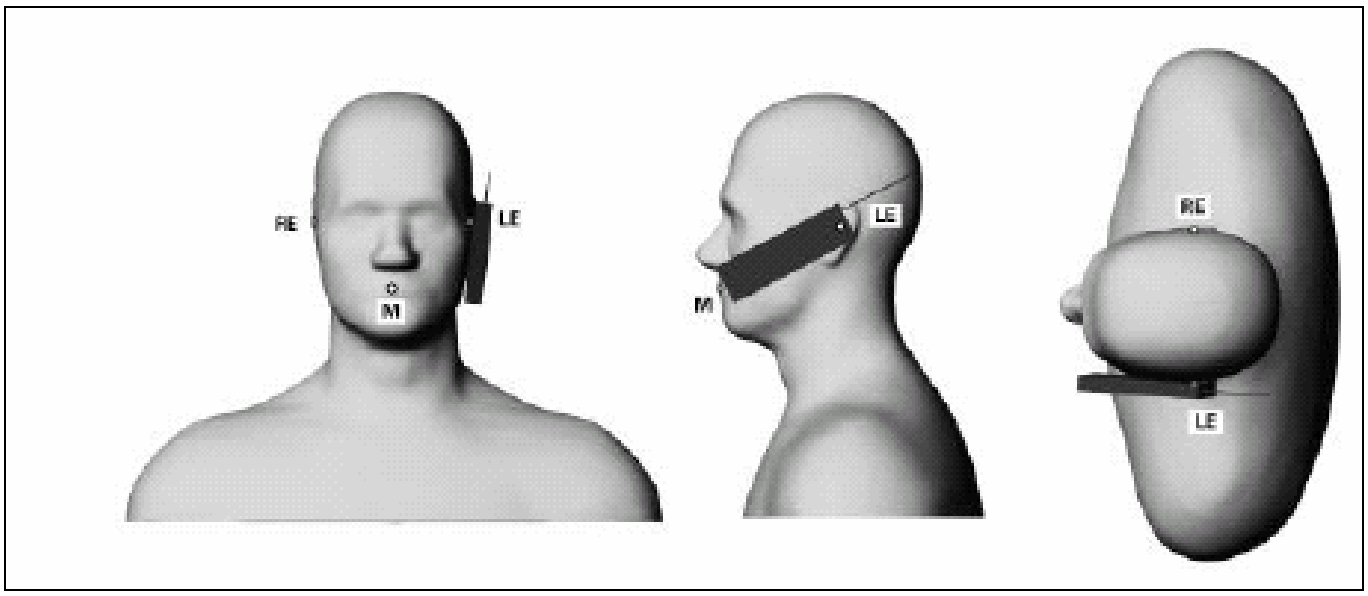

Fig. 9.1 Phone Position 1, "Cheek" or "Touch" Position. The reference points for the right ear (RE), left ear (LE) and mouth (M), which define the plane for phone positioning, are indicated.

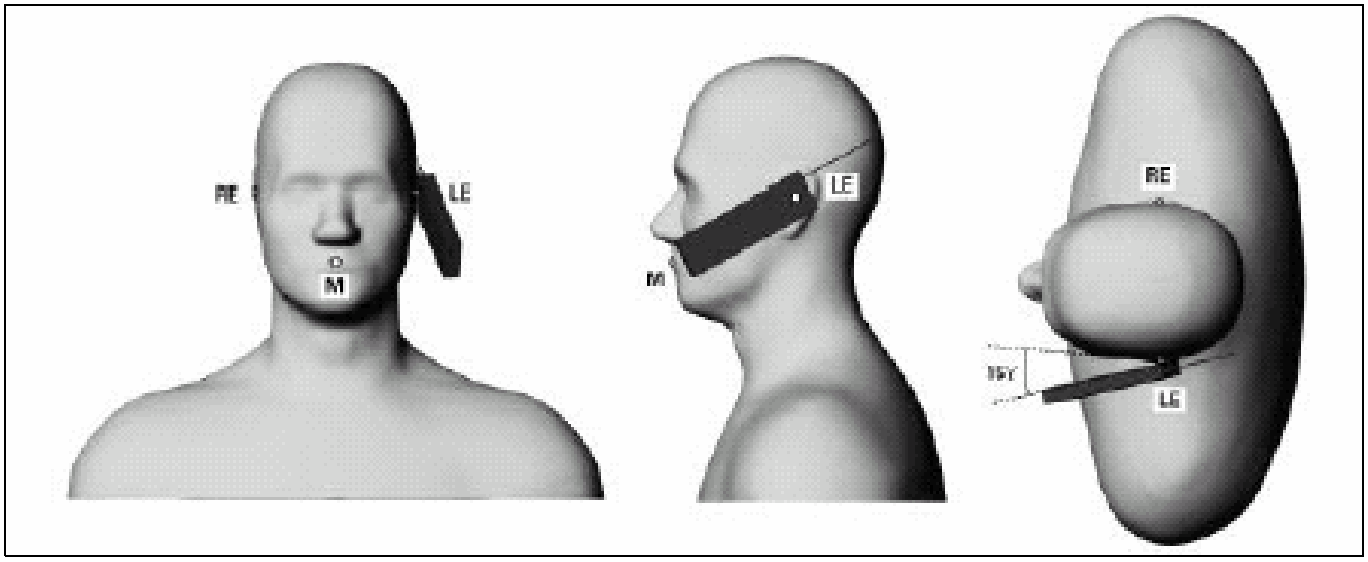

Fig. 9.2 Phone Position 2, "Tilted Position". The reference point for the right ear (RE), left ear (LE) and mouth (M), which define the plane for phone positioning, are indicated.

©2006 SPORTON International Inc. SAR Testing Lab
This report shall not be reproduced except in full, without the written approval of Sporton.

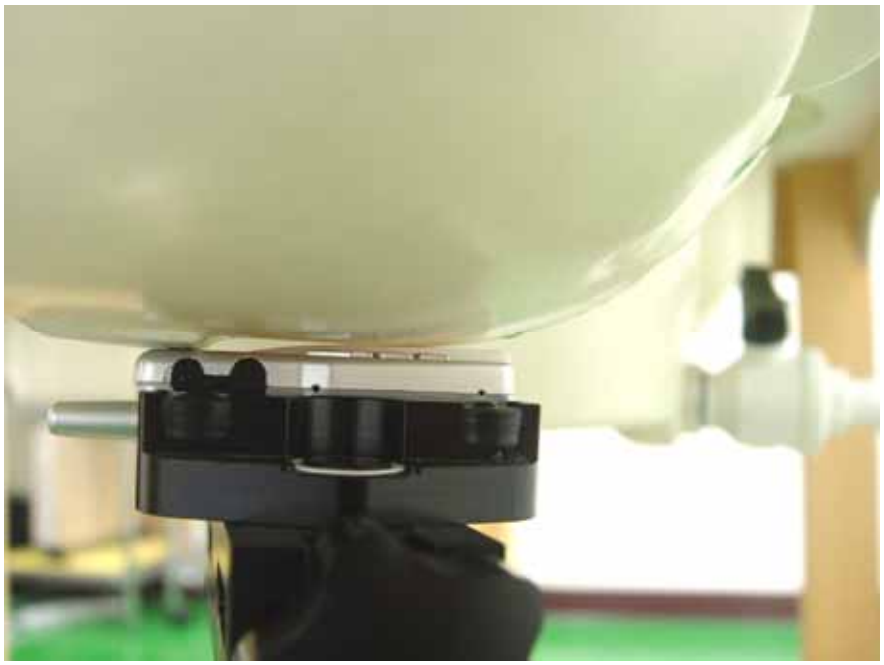

Fig. 9.3 Right Cheek

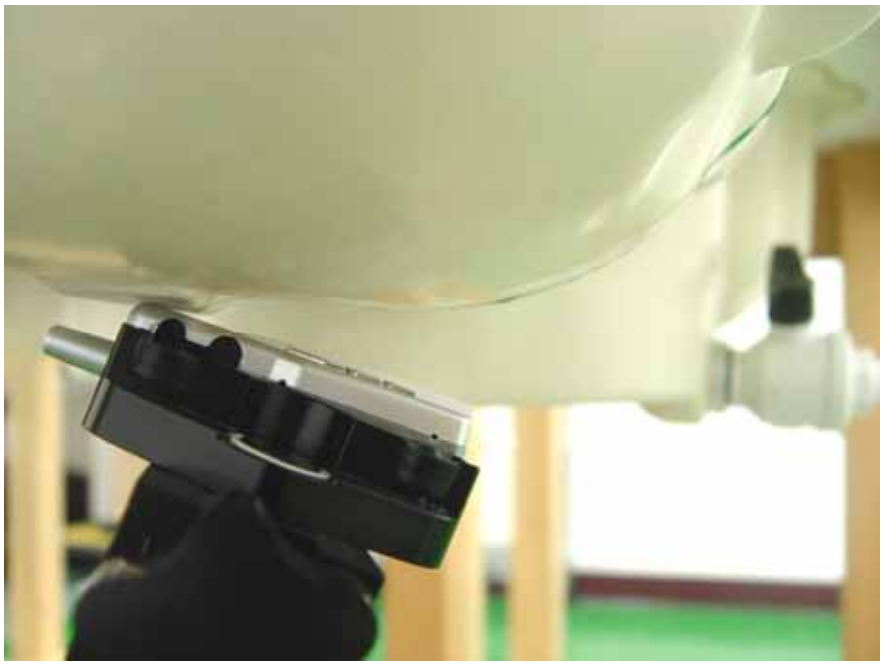

Fig. 9.4 Right Tilted

©2006 SPORTON International Inc. SAR Testing Lab
This report shall not be reproduced except in full, without the written approval of Sporton.

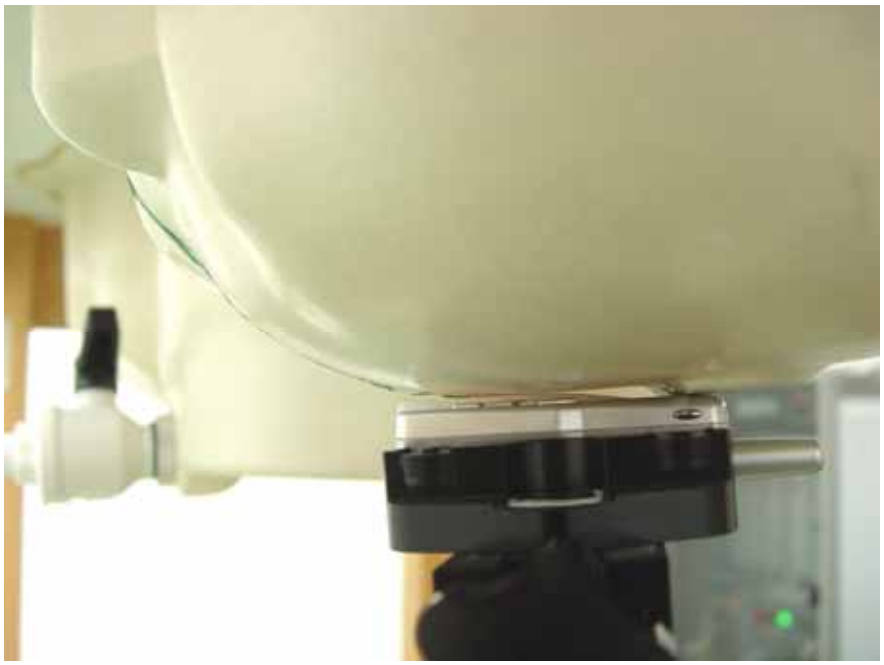

Fig. 9.5 Left Cheek

Fig. 9.6 Left Tilted

©2006 SPORTON International Inc. SAR Testing Lab
This report shall not be reproduced except in full, without the written approval of Sporton.

Fig. 9.7 Keypad Up with 1.5cm Gap

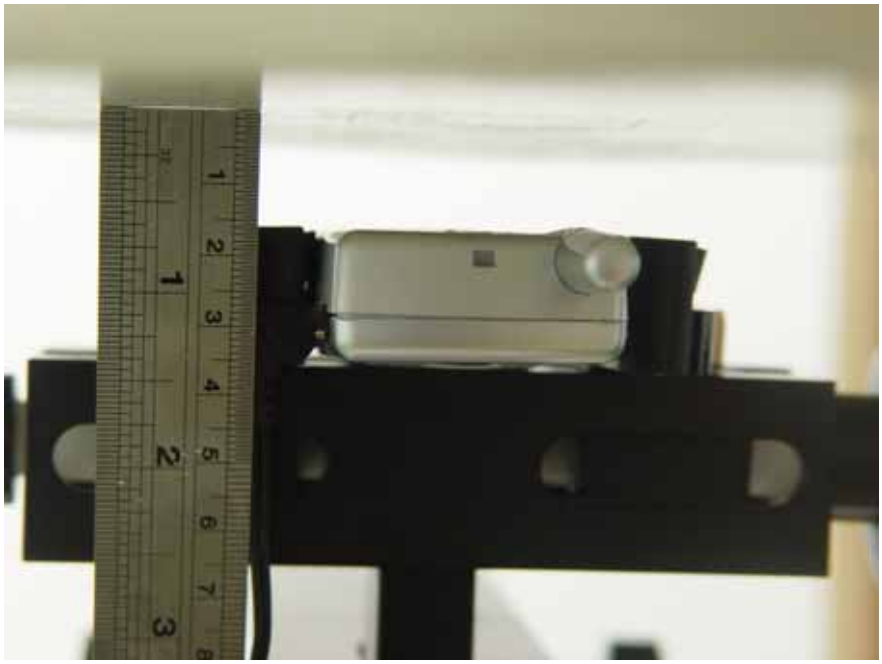

Fig. 9.8 Keypad Down with 1.5cm Gap

©2006 SPORTON International Inc. SAR Testing Lab
This report shall not be reproduced except in full, without the written approval of Sporton.

10. Measurement Procedures

The measurement procedures are as follows:

- Linking DUT with base station emulator CMU200 in middle channel for GSM850 or PCS1900 band
- Setting PCL=5 for GSM850 or PCL=0 for PCS on CMU200 to allow DUT to radiate maximum output power
- Measuring output power through RF cable and power meter
- Placing the DUT in the positions described in the last section
- Setting scan area, grid size and other setting on the DASY4 software
- Taking data for the lowest, middle, and highest channel on each testing position

According to the IEEE P1528 draft standard, the recommended procedure for assessing the peak spatial-average SAR value consists of the following steps:

- Power reference measurement
- Area scan
- Zoom scan
- Power reference measurement

10.1 Spatial Peak SAR Evaluation

The procedure for spatial peak SAR evaluation has been implemented according to the IEEE1528-2003 standard. It can be conducted for 1g and 10g, as well as for user-specific masses. The DASY4 software includes all numerical procedures necessary to evaluate the spatial peak SAR value.

Base on the Draft: SCC-34, SC-2, WG-2-Computational Dosimetry, IEEE P1528/D1.2 (Recommended Practice for Determining the Peak Spatial-Average Specific Absorption Rate (SAR) in the Human Head from Wireless Communications Devices: Measurement Techniques), a new algorithm has been implemented. The spatial-peak SAR can be computed over any required mass.

The base for the evaluation is a "cube" measurement. The measured volume must include the 1g and 10g cubes with the highest averaged SAR values. For that purpose , the center of the measured volume is aligned to the interpolated peak SAR value of a previously performed area scan.

The entire evaluation of the spatial peak values is performed within the postprocessing engine (SEMCAD). The system always gives the maximum values for the 1g and 10g cubes. The algorithm to find the cube with highest averaged SAR is divided into the following stages:

©2006 SPORTON International Inc. SAR Testing Lab
This report shall not be reproduced except in full, without the written approval of Sporton.

- extraction of the measured data (grid and values) from the Zoom Scan
- calculation of the SAR value at every measurement point based on all stored data (A/D values and measurement parameters)
- generation of a high-resolution mesh within the measured volume

- interpolation of all measured values form the measurement grid to the high-resolution grid
- extrapolation of the entire 3-D field distribution to the phantom surface over the distance from sensor to surface
- calculation of the averaged SAR within masses of 1g and 10g

10.2 Scan Procedures

First **Area Scan** is used to locate the approximate location(s) of the local peak SAR value(s). The measurement grid within an **Area Scan** is defined by the grid extent, grid step size and grid offset. Next, in order to determine the EM field distribution in a three-dimensional spatial extension, **Zoom Scan** is required. The **Zoom Scan** measures 5x5x7 points with step size 8, 8 and 5 mm. The **Zoom Scan** is performed around the highest E-field value to determine the averaged SAR-distribution over 1 g.

10.3 SAR Averaged Methods

In DASY4, the interpolation and extrapolation are both based on the modified Quadratic Shepard's method. The interpolation scheme combines a least-square fitted function method and a weighted average method which are the two basic types of computational interpolation and approximation.

Extrapolation routines are used to obtain SAR values between the lowest measurement points and the inner phantom surface. The extrapolation distance is determined by the surface detection distance and the probe sensor offset. The uncertainty increases with the extrapolation distance. To keep the uncertainty within 1% for the 1 g and 10 g cubes, the extrapolation distance should not be larger than 5 mm.

©2006 SPORTON International Inc. SAR Testing Lab
This report shall not be reproduced except in full, without the written approval of Sporton.

11. SAR Test Results

11.1 Right Cheek

Bands	Chan.	Freq (MHz)	Modulation Type	Conducted Power (dBm)	Power Drift (dB)	Measured 1g SAR (W/kg)	Limit (W/kg)	Results
GSM 850	**128**	**824.2 (Low)**	**GMSK**	**31.51**	**0.024**	**0.684**	**1.6**	**Pass**
	189	836.4 (Mid)	GMSK	31.67	-0.007	0.581	1.6	Pass
	251	848.8 (High)	GMSK	31.78	0.024	0.576	1.6	Pass
PCS 1900	512	1850.2 (Low)	GMSK	28.72	-0.064	0.964	1.6	Pass
	661	1880.0 (Mid)	GMSK	28.62	0.041	0.877	1.6	Pass
	810	1909.8 (High)	GMSK	28.89	-0.03	0.961	1.6	Pass

11.2 Right Tilted

Bands	Chan.	Freq (MHz)	Modulation Type	Conducted Power (dBm)	Power Drift (dB)	Measured 1g SAR (W/kg)	Limit (W/kg)	Results
GSM 850	128	824.2 (Low)	GMSK	31.51	-	-	-	-
	189	836.4 (Mid)	GMSK	31.67	-0.042	0.437	1.6	Pass
	251	848.8 (High)	GMSK	31.78	-	-	-	-
PCS 1900	512	1850.2 (Low)	GMSK	28.72	-	-	-	-
	661	1880.0 (Mid)	GMSK	28.62	-0.069	0.664	1.6	Pass
	810	1909.8 (High)	GMSK	28.89	-	-	-	-

11.3 Left Cheek

Bands	Chan.	Freq (MHz)	Modulation Type	Conducted Power (dBm)	Power Drift (dB)	Measured 1g SAR (W/kg)	Limit (W/kg)	Results
GSM 850	128	824.2 (Low)	GMSK	31.51	-	-	-	-
	189	836.4 (Mid)	GMSK	31.67	-0.131	0.202	1.6	Pass
	251	848.8 (High)	GMSK	31.78	-	-	-	-
PCS 1900	512	1850.2 (Low)	GMSK	28.72	-	-	-	-
	661	1880.0 (Mid)	GMSK	28.62	-0.105	0.696	1.6	Pass
	810	1909.8 (High)	GMSK	28.89	-	-	-	-

©2006 SPORTON International Inc. SAR Testing Lab
This report shall not be reproduced except in full, without the written approval of Sporton.

11.4 Left Tilted

Bands	Chan.	Freq (MHz)	Modulation Type	Conducted Power (dBm)	Power Drift (dB)	Measured 1g SAR (W/kg)	Limit (W/kg)	Results
GSM 850	128	824.2 (Low)	GMSK	31.51	-	-	-	-
	189	836.4 (Mid)	GMSK	31.67	-0.147	0.372	1.6	Pass
	251	848.8 (High)	GMSK	31.78	-	-	-	-
PCS 1900	512	1850.2 (Low)	GMSK	28.72	-0.093	0.854	1.6	Pass
	661	1880.0 (Mid)	GMSK	28.62	-0.064	0.953	1.6	Pass
	810	**1909.8 (High)**	**GMSK**	**28.89**	**-0.122**	**1.01**	**1.6**	**Pass**

11.5 Keypad Up with 1.5 cm Gap

Bands	Chan.	Freq (MHz)	Modulation Type	Conducted Power (dBm)	Power Drift (dB)	Measured 1g SAR (W/kg)	Limit (W/kg)	Results
GSM 850	128	824.2 (Low)	GMSK	31.51	-	-	-	-
	190	836.6 (Mid)	GMSK	31.67	-0.108	0.245	1.6	Pass
	251	848.8 (High)	GMSK	31.78	-	-	-	-
PCS 1900	512	1850.2 (Low)	GMSK	28.72	-	-	-	-
	661	1880.0 (Mid)	GMSK	28.62	-0.105	0.183	1.6	Pass
	810	1909.8 (High)	GMSK	28.89	-	-	-	-

11.6 Keypad Down with 1.5 cm Gap

Bands	Chan.	Freq (MHz)	Modulation Type	Conducted Power (dBm)	Power Drift (dB)	Measured 1g SAR (W/kg)	Limit (W/kg)	Results
GSM 850	**128**	**824.2 (Low)**	**GMSK**	**31.51**	**0.005**	**0.35**	**1.6**	**Pass**
	190	836.6 (Mid)	GMSK	31.67	-0.03	0.332	1.6	Pass
	251	848.8 (High)	GMSK	31.78	0.002	0.301	1.6	Pass
PCS 1900	512	1850.2 (Low)	GMSK	28.72	-0.068	0.235	1.6	Pass
	661	1880.0 (Mid)	GMSK	28.62	-0.142	0.246	1.6	Pass
	810	**1909.8 (High)**	**GMSK**	**28.89**	**-0.029**	**0.263**	**1.6**	**Pass**

Test Engineer：Gordon Lin

©2006 SPORTON International Inc. SAR Testing Lab
This report shall not be reproduced except in full, without the written approval of Sporton.

12. References

[1] FCC 47 CFR Part 2 "Frequency Allocations and Radio Treaty Matters; General Rules and Regulations"
[2] IEEE Std. P1528-2003, "Recommended Practice for Determining the Peak Spatial-Average Specific Absorption Rate (SAR) in the Human Head from Wireless Communications Devices: Measurement Techniques", April 21, 2003
[3] Supplement C (Edition 01-01) to OET Bulletin 65 (Edition 97-01), "Additional Information for Evaluating Compliance of Mobile and Portable Devices with FCC Limits for Human Exposure to RF Emissions", June 2001
[4] IEEE Std. C95.3-2002, "IEEE Recommended Practice for the Measurement of Potentially Hazardous Electromagnetic Fields-RF and Microwave", 2002
[5] IEEE Std. C95.1-1999, "IEEE Standard for Safety Levels with Respect to Human Exposure to Radio Frequency Electromagnetic Fields, 3 kHz to 300 GHz", 1999
[6] Robert J. Renka, "Multivariate Interpolation Of Large Sets Of Scattered Data", University of Noth Texas ACM Transactions on Mathematical Software, vol. 14, no. 2, June 1988, pp. 139-148
[7] DAYS4 System Handbook

©2006 SPORTON International Inc. SAR Testing Lab
This report shall not be reproduced except in full, without the written approval of Sporton.

Appendix A - System Performance Check Data

Test Laboratory: Sporton International Inc. SAR Testing Lab Date/Time: 2/22/2006 9:47:12 AM

System Check_Head_900MHz_20060222

DUT: Dipole 900 MHz; Type: D900V2; Serial: D900V2 - SN:190

Communication System: CW; Frequency: 900 MHz;Duty Cycle: 1:1
Medium: HSL_850 Medium parameters used: f = 900 MHz; σ = 0.975 mho/m; ε_r = 40.5; ρ = 1000 kg/m^3
Ambient Temperature：21.6 ℃; Liquid Temperature：20.0 ℃

DASY4 Configuration:
- Probe: ET3DV6 - SN1788; ConvF(6.63, 6.63, 6.63); Calibrated: 9/30/2004
- Sensor-Surface: 4mm (Mechanical And Optical Surface Detection)Sensor-Surface: 4mm (Mechanical Surface Detection)
- Electronics: DAE3 Sn577; Calibrated: 11/11/2005
- Phantom: SAM-B; Type: QD 000 P40 C; Serial: TP-1383
- Measurement SW: DASY4, V4.6 Build 23; Postprocessing SW: SEMCAD, V1.8 Build 160

Pin=100mW/Area Scan (61x61x1): Measurement grid: dx=15mm, dy=15mm
Maximum value of SAR (interpolated) = 1.17 mW/g

Pin=100mW/Zoom Scan (7x7x7)/Cube 0: Measurement grid: dx=5mm, dy=5mm, dz=5mm
Reference Value = 35.4 V/m; Power Drift = 0.011 dB
Peak SAR (extrapolated) = 1.62 W/kg
SAR(1 g) = 1.08 mW/g; SAR(10 g) = 0.687 mW/g
Maximum value of SAR (measured) = 1.17 mW/g

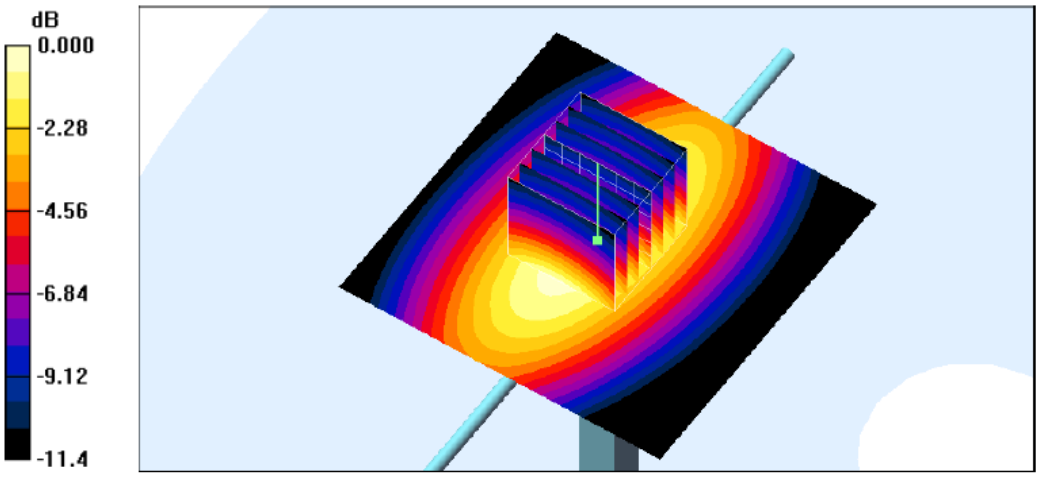

0 dB = 1.17mW/g

©2006 SPORTON International Inc. SAR Testing Lab
This report shall not be reproduced except in full, without the written approval of Sporton.

Test Laboratory: Sporton International Inc. SAR Testing Lab Date/Time: 2/23/2006 6:44:49 AM

System Check_Body_900MHz_20060223

DUT: Dipole 900 MHz; Type: D900V2; Serial: D900V2 - SN:190

Communication System: CW; Frequency: 900 MHz;Duty Cycle: 1:1
Medium: HSL_850 Medium parameters used: f = 900 MHz; σ = 1.06 mho/m; ε_r = 54.3; ρ = 1000 kg/m^3
Ambient Temperature：22.1 ℃; Liquid Temperature：21.0 ℃

DASY4 Configuration:
- Probe: ET3DV6 - SN1788; ConvF(6.17, 6.17, 6.17); Calibrated: 9/30/2004
- Sensor-Surface: 4mm (Mechanical And Optical Surface Detection)Sensor-Surface: 4mm (Mechanical Surface Detection)
- Electronics: DAE3 Sn577; Calibrated: 11/11/2005
- Phantom: SAM-A; Type: QD 000 P40 C; Serial: TP-1303
- Measurement SW: DASY4, V4.6 Build 23; Postprocessing SW: SEMCAD, V1.8 Build 160

Pin=100mW/Area Scan (41x41x1): Measurement grid: dx=20mm, dy=20mm
Maximum value of SAR (interpolated) = 1.09 mW/g

Pin=100mW/Zoom Scan (7x7x7)/Cube 0: Measurement grid: dx=5mm, dy=5mm, dz=5mm
Reference Value = 32.0 V/m; Power Drift = -0.023 dB
Peak SAR (extrapolated) = 1.58 W/kg
SAR(1 g) = 1.12 mW/g; SAR(10 g) = 0.738 mW/g
Maximum value of SAR (measured) = 1.21 mW/g

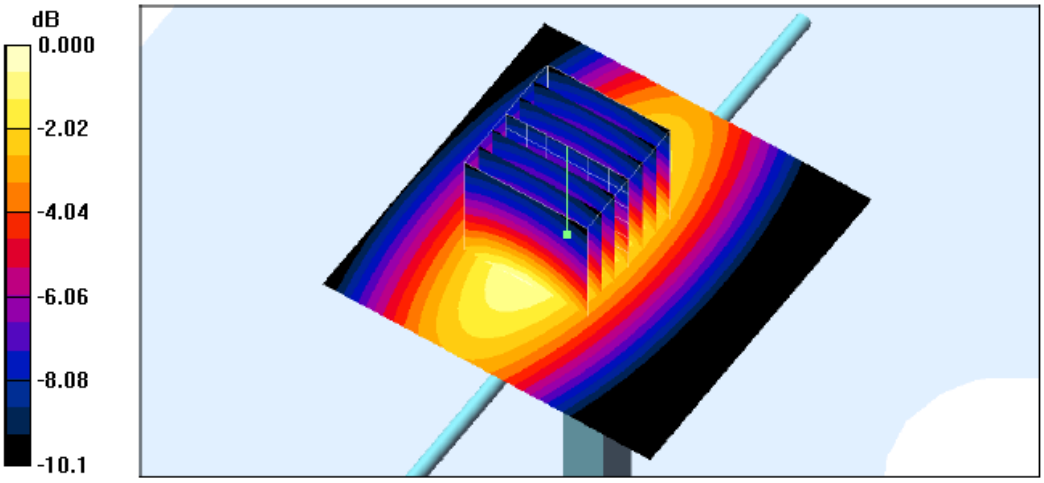

0 dB = 1.21mW/g

©2006 SPORTON International Inc. SAR Testing Lab
This report shall not be reproduced except in full, without the written approval of Sporton.

Test Laboratory: Sporton International Inc. SAR Testing Lab Date/Time: 2/22/2006 6:29:41 PM

System Check_Head_1800MHz_20060222

DUT: Dipole 1800 MHz; Type: D1800V2; Serial: D1800V2 - SN:2d076

Communication System: CW; Frequency: 1800 MHz;Duty Cycle: 1:1
Medium: HSL_1800 Medium parameters used: f = 1800 MHz; σ = 1.43 mho/m; ε_r = 38.6; ρ = 1000 kg/m^3
Ambient Temperature：21.9 ℃; Liquid Temperature：20.0 ℃

DASY4 Configuration:
- Probe: ET3DV6 - SN1788; ConvF(5.37, 5.37, 5.37); Calibrated: 9/30/2004
- Sensor-Surface: 4mm (Mechanical And Optical Surface Detection)Sensor-Surface: 4mm (Mechanical Surface Detection)
- Electronics: DAE3 Sn577; Calibrated: 11/11/2005
- Phantom: SAM-A; Type: QD 000 P40 C; Serial: TP-1303
- Measurement SW: DASY4, V4.6 Build 23; Postprocessing SW: SEMCAD, V1.8 Build 160

Pin=100mW/Area Scan (91x91x1): Measurement grid: dx=10mm, dy=10mm
Maximum value of SAR (interpolated) = 4.36 mW/g

Pin=100mW/Zoom Scan (7x7x7)/Cube 0: Measurement grid: dx=5mm, dy=5mm, dz=5mm
Reference Value = 58.0 V/m; Power Drift = 0.020 dB
Peak SAR (extrapolated) = 6.70 W/kg
SAR(1 g) = 3.8 mW/g; SAR(10 g) = 2 mW/g
Maximum value of SAR (measured) = 4.29 mW/g

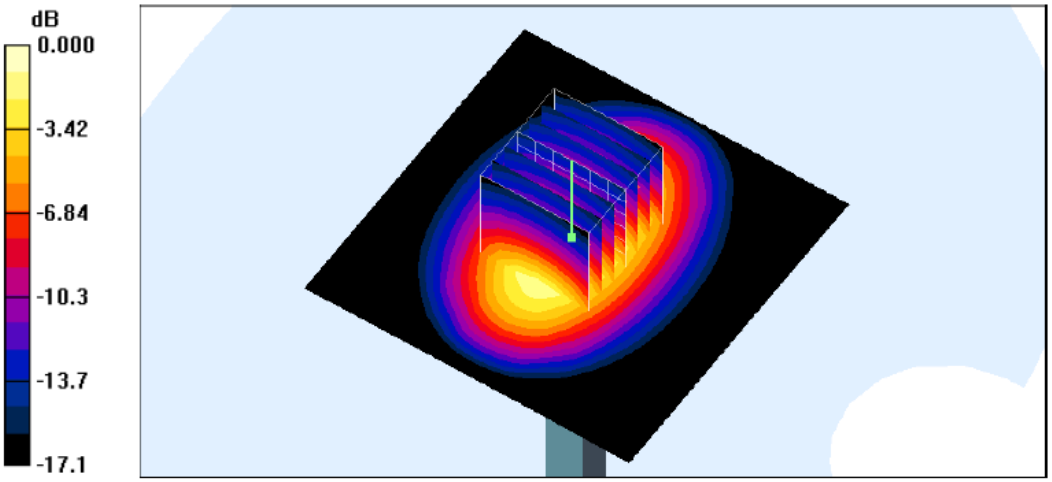

0 dB = 4.29mW/g

©2006 SPORTON International Inc. SAR Testing Lab
This report shall not be reproduced except in full, without the written approval of Sporton.

Test Laboratory: Sporton International Inc. SAR Testing Lab Date/Time: 2/24/2006 12:46:50 AM

System Check_Body_1800MHz_20060224

DUT: Dipole 1800 MHz; Type: D1800V2; Serial: D1800V2 - SN:2d076

Communication System: CW; Frequency: 1800 MHz;Duty Cycle: 1:1
Medium: MSL_1800 Medium parameters used: f = 1800 MHz; σ = 1.6 mho/m; ε_r = 52.2; ρ = 1000 kg/m^3
Ambient Temperature：22.4 ℃; Liquid Temperature：21.2 ℃

DASY4 Configuration:
- Probe: ET3DV6 - SN1788; ConvF(4.73, 4.73, 4.73); Calibrated: 9/30/2004
- Sensor-Surface: 4mm (Mechanical And Optical Surface Detection)Sensor-Surface: 4mm (Mechanical Surface Detection)
- Electronics: DAE3 Sn577; Calibrated: 11/11/2005
- Phantom: SAM-B; Type: QD 000 P40 C; Serial: TP-1383
- Measurement SW: DASY4, V4.6 Build 23; Postprocessing SW: SEMCAD, V1.8 Build 160

Pin=100mW/Area Scan (91x91x1): Measurement grid: dx=10mm, dy=10mm
Maximum value of SAR (interpolated) = 4.87 mW/g

Pin=100mW/Zoom Scan (7x7x7)/Cube 0: Measurement grid: dx=5mm, dy=5mm, dz=5mm
Reference Value = 57.7 V/m; Power Drift = 0.060 dB
Peak SAR (extrapolated) = 7.13 W/kg
SAR(1 g) = 4.18 mW/g; SAR(10 g) = 2.22 mW/g
Maximum value of SAR (measured) = 4.77 mW/g

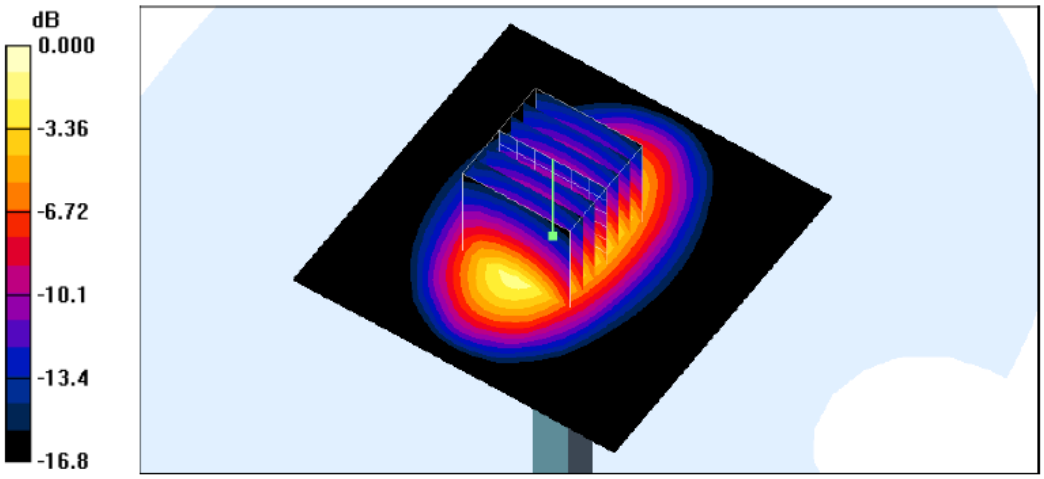

0 dB = 4.77mW/g

©2006 SPORTON International Inc. SAR Testing Lab
This report shall not be reproduced except in full, without the written approval of Sporton.

Appendix B - SAR Measurement Data

Test Laboratory: Sporton International Inc. SAR Testing Lab Date/Time: 2/22/2006 5:59:43 PM

Right Cheek_GSM850 Ch128_20060222

DUT: 5D2102; Type: Personal Tracking System

Communication System: GSM850; Frequency: 824.2 MHz;Duty Cycle: 1:8.3
Medium: HSL_850 Medium parameters used : f = 824.2 MHz; σ = 0.901 mho/m; ε_r = 41.2; ρ = 1000 kg/m^3
Ambient Temperature：22.4 ℃; Liquid Temperature：20.0 ℃

DASY4 Configuration:
- Probe: ET3DV6 - SN1788; ConvF(6.74, 6.74, 6.74); Calibrated: 9/30/2004
- Sensor-Surface: 4mm (Mechanical And Optical Surface Detection)
- Electronics: DAE3 Sn577; Calibrated: 11/11/2005
- Phantom: SAM-B; Type: QD 000 P40 C; Serial: TP-1383
- Measurement SW: DASY4, V4.6 Build 23; Postprocessing SW: SEMCAD, V1.8 Build 160

Ch128/Area Scan (41x81x1): Measurement grid: dx=15mm, dy=15mm
Maximum value of SAR (interpolated) = 0.728 mW/g

Ch128/Zoom Scan (5x5x7)/Cube 0: Measurement grid: dx=8mm, dy=8mm, dz=5mm
Reference Value = 26.4 V/m; Power Drift = 0.024 dB
Peak SAR (extrapolated) = 0.927 W/kg
SAR(1 g) = 0.684 mW/g; SAR(10 g) = 0.473 mW/g
Maximum value of SAR (measured) = 0.734 mW/g

Ch128/Zoom Scan (5x5x7)/Cube 1: Measurement grid: dx=8mm, dy=8mm, dz=5mm
Reference Value = 26.4 V/m; Power Drift = 0.024 dB
Peak SAR (extrapolated) = 0.904 W/kg
SAR(1 g) = 0.600 mW/g; SAR(10 g) = 0.392 mW/g
Maximum value of SAR (measured) = 0.670 mW/g

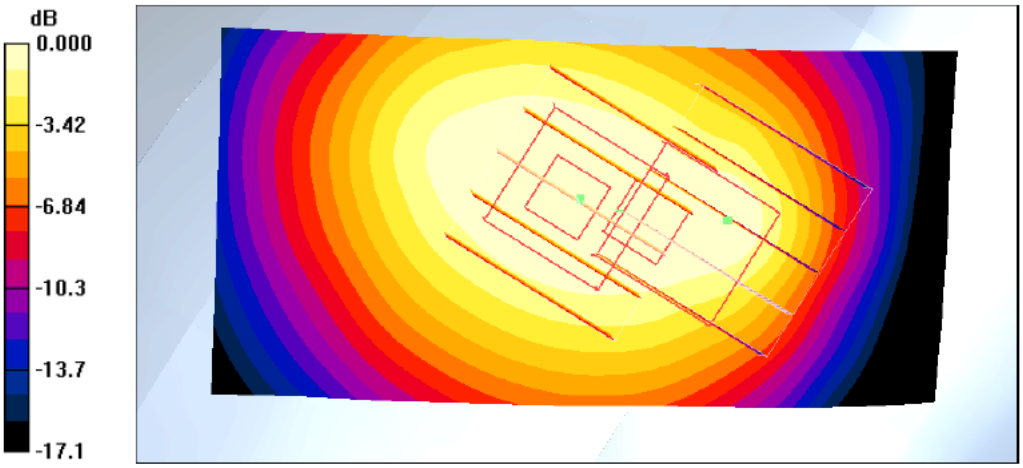

0 dB = 0.670mW/g

©2006 SPORTON International Inc. SAR Testing Lab
This report shall not be reproduced except in full, without the written approval of Sporton.

Test Laboratory: Sporton International Inc. SAR Testing Lab Date/Time: 2/22/2006 2:54:05 PM

Right Tilted_GSM850 Ch189_20060222

DUT: 5D2102; Type: Personal Tracking System

Communication System: GSM850; Frequency: 836.4 MHz;Duty Cycle: 1:8.3
Medium: HSL_850 Medium parameters used : f = 836.4 MHz; σ = 0.913 mho/m; ε_r = 41; ρ = 1000 kg/m^3
Ambient Temperature：21.0 ℃； Liquid Temperature：20.0 ℃

DASY4 Configuration:
- Probe: ET3DV6 - SN1788; ConvF(6.74, 6.74, 6.74); Calibrated: 9/30/2004
- Sensor-Surface: 4mm (Mechanical And Optical Surface Detection)
- Electronics: DAE3 Sn577; Calibrated: 11/11/2005
- Phantom: SAM-B; Type: QD 000 P40 C; Serial: TP-1383
- Measurement SW: DASY4, V4.6 Build 23; Postprocessing SW: SEMCAD, V1.8 Build 160

Ch189/Area Scan (41x81x1): Measurement grid: dx=15mm, dy=15mm
Maximum value of SAR (interpolated) = 0.489 mW/g

Ch189/Zoom Scan (5x5x7)/Cube 0: Measurement grid: dx=8mm, dy=8mm, dz=5mm
Reference Value = 22.2 V/m; Power Drift = -0.042 dB
Peak SAR (extrapolated) = 0.646 W/kg
SAR(1 g) = 0.437 mW/g; SAR(10 g) = 0.292 mW/g
Maximum value of SAR (measured) = 0.469 mW/g

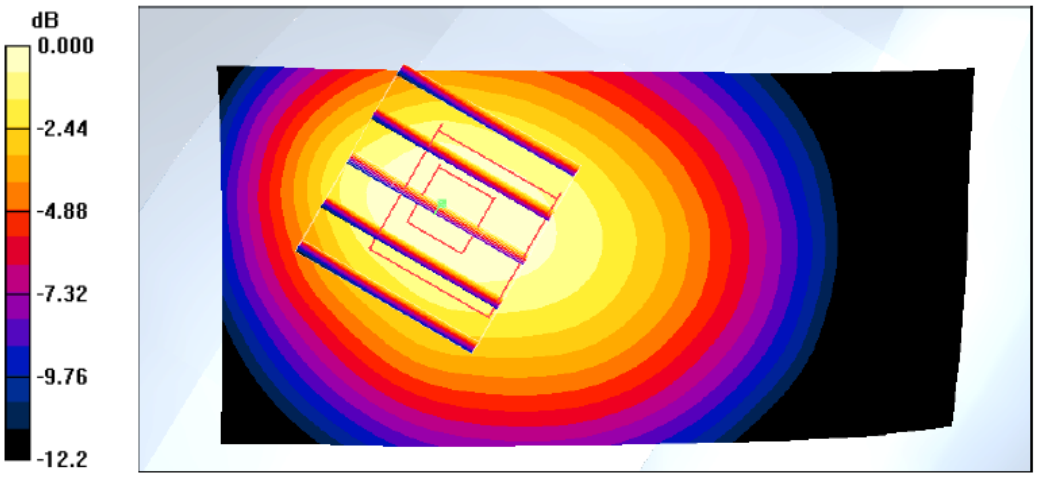

0 dB = 0.469mW/g

©2006 SPORTON International Inc. SAR Testing Lab
This report shall not be reproduced except in full, without the written approval of Sporton.

Test Laboratory: Sporton International Inc. SAR Testing Lab Date/Time: 2/22/2006 5:25:43 PM

Left Cheek_GSM850 Ch189_20060222

DUT: 5D2102; Type: Personal Tracking System

Communication System: GSM850; Frequency: 836.4 MHz;Duty Cycle: 1:8.3
Medium: HSL_850 Medium parameters used : f = 836.4 MHz; σ = 0.913 mho/m; ε_r = 41; ρ = 1000 kg/m^3
Ambient Temperature：21.0 ℃； Liquid Temperature：20.0 ℃

DASY4 Configuration:
- Probe: ET3DV6 - SN1788; ConvF(6.74, 6.74, 6.74); Calibrated: 9/30/2004
- Sensor-Surface: 4mm (Mechanical And Optical Surface Detection)
- Electronics: DAE3 Sn577; Calibrated: 11/11/2005
- Phantom: SAM-B; Type: QD 000 P40 C; Serial: TP-1383
- Measurement SW: DASY4, V4.6 Build 23; Postprocessing SW: SEMCAD, V1.8 Build 160

Ch189/Area Scan (41x81x1): Measurement grid: dx=15mm, dy=15mm
Maximum value of SAR (interpolated) = 0.214 mW/g

Ch189/Zoom Scan (5x5x7)/Cube 0: Measurement grid: dx=8mm, dy=8mm, dz=5mm
Reference Value = 12.6 V/m; Power Drift = -0.131 dB
Peak SAR (extrapolated) = 0.301 W/kg
SAR(1 g) = 0.202 mW/g; SAR(10 g) = 0.130 mW/g
Maximum value of SAR (measured) = 0.213 mW/g

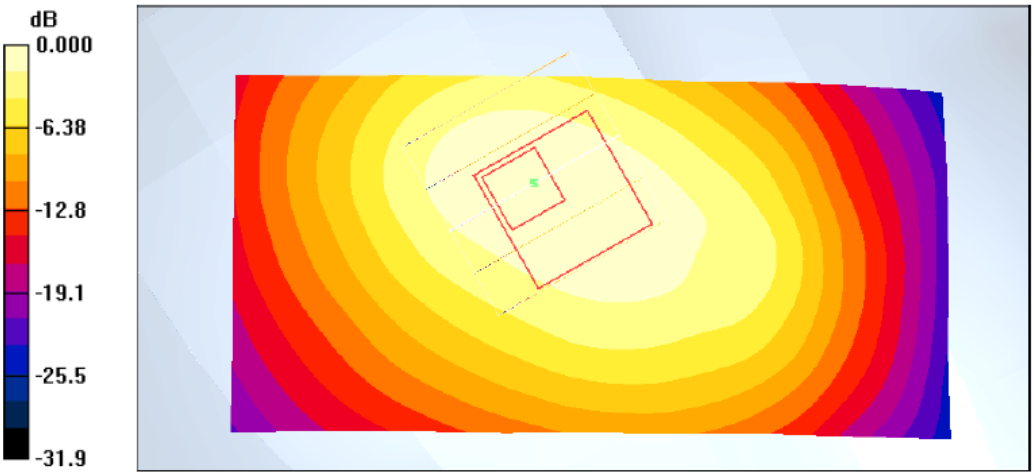

0 dB = 0.213mW/g

©2006 SPORTON International Inc. SAR Testing Lab
This report shall not be reproduced except in full, without the written approval of Sporton.

Test Laboratory: Sporton International Inc. SAR Testing Lab Date/Time: 2/22/2006 5:11:21 PM

Left Tilted_GSM850 Ch189_20060222

DUT: 5D2102; Type: Personal Tracking System

Communication System: GSM850; Frequency: 836.4 MHz;Duty Cycle: 1:8.3
Medium: HSL_850 Medium parameters used : f = 836.4 MHz; σ = 0.913 mho/m; ε_r = 41; ρ = 1000 kg/m^3
Ambient Temperature：21.0 ℃； Liquid Temperature：20.0 ℃

DASY4 Configuration:
- Probe: ET3DV6 - SN1788; ConvF(6.74, 6.74, 6.74); Calibrated: 9/30/2004
- Sensor-Surface: 4mm (Mechanical And Optical Surface Detection)
- Electronics: DAE3 Sn577; Calibrated: 11/11/2005
- Phantom: SAM-B; Type: QD 000 P40 C; Serial: TP-1383
- Measurement SW: DASY4, V4.6 Build 23; Postprocessing SW: SEMCAD, V1.8 Build 160

Ch189/Area Scan (41x81x1): Measurement grid: dx=15mm, dy=15mm
Maximum value of SAR (interpolated) = 0.515 mW/g

Ch189/Zoom Scan (5x5x7)/Cube 0: Measurement grid: dx=8mm, dy=8mm, dz=5mm
Reference Value = 22.1 V/m; Power Drift = -0.147 dB
Peak SAR (extrapolated) = 0.606 W/kg
SAR(1 g) = 0.372 mW/g; SAR(10 g) = 0.235 mW/g
Maximum value of SAR (measured) = 0.409 mW/g

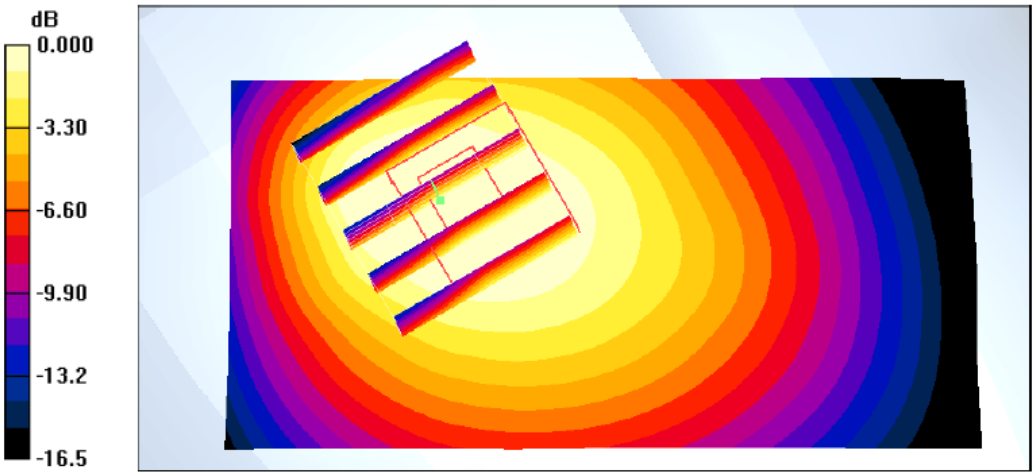

0 dB = 0.409mW/g

©2006 SPORTON International Inc. SAR Testing Lab
This report shall not be reproduced except in full, without the written approval of Sporton.

Test Laboratory: Sporton International Inc. SAR Testing Lab Date/Time: 2/22/2006 6:49:18 PM

Right Cheek_PCS Ch661_20060222

DUT: 5D2102; Type: Personal Tracking System

Communication System: PCS; Frequency: 1880 MHz;Duty Cycle: 1:8.3
Medium: HSL_1900 Medium parameters used: f = 1880 MHz; σ = 1.44 mho/m; ε_r = 39.1; ρ = 1000 kg/m^3
Ambient Temperature：22.1 ℃; Liquid Temperature：20.0 ℃

DASY4 Configuration:
- Probe: ET3DV6 - SN1788; ConvF(5.16, 5.16, 5.16); Calibrated: 9/30/2004
- Sensor-Surface: 4mm (Mechanical And Optical Surface Detection)
- Electronics: DAE3 Sn577; Calibrated: 11/11/2005
- Phantom: SAM-A; Type: QD 000 P40 C; Serial: TP-1303
- Measurement SW: DASY4, V4.6 Build 23; Postprocessing SW: SEMCAD, V1.8 Build 160

Ch661/Area Scan (41x81x1): Measurement grid: dx=15mm, dy=15mm
Maximum value of SAR (interpolated) = 1.04 mW/g

Ch661/Zoom Scan (5x5x7)/Cube 0: Measurement grid: dx=8mm, dy=8mm, dz=5mm
Reference Value = 18.8 V/m; Power Drift = 0.041 dB
Peak SAR (extrapolated) = 1.31 W/kg
SAR(1 g) = 0.877 mW/g; SAR(10 g) = 0.501 mW/g
Maximum value of SAR (measured) = 0.983 mW/g

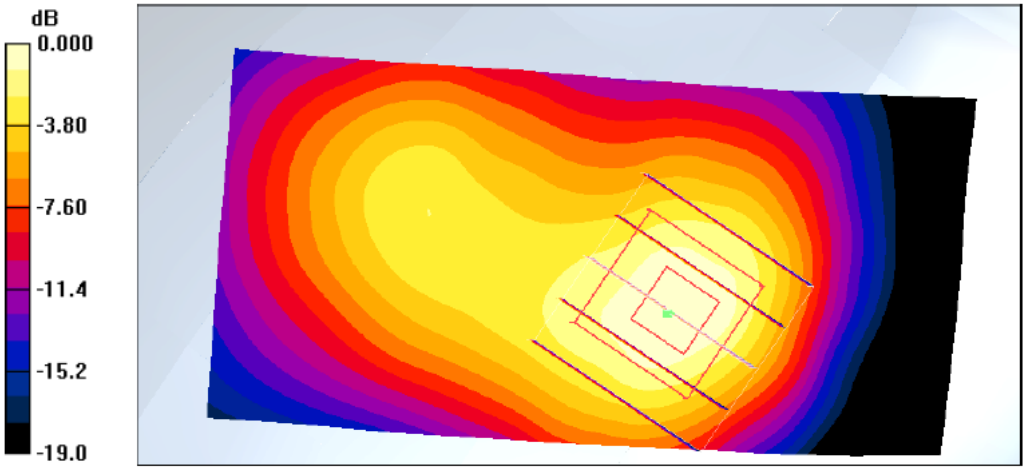

0 dB = 0.983mW/g

©2006 SPORTON International Inc. SAR Testing Lab
This report shall not be reproduced except in full, without the written approval of Sporton.

Test Laboratory: Sporton International Inc. SAR Testing Lab Date/Time: 2/22/2006 7:56:33 PM

Right Tilted_PCS Ch661_20060222

DUT: 5D2102; Type: Personal Tracking System

Communication System: PCS; Frequency: 1880 MHz;Duty Cycle: 1:8.3
Medium: HSL_1900 Medium parameters used: f = 1880 MHz; σ = 1.44 mho/m; ε_r = 39.1; ρ = 1000 kg/m^3
Ambient Temperature：22.1 ℃； Liquid Temperature：20.0 ℃

DASY4 Configuration:
- Probe: ET3DV6 - SN1788; ConvF(5.16, 5.16, 5.16); Calibrated: 9/30/2004
- Sensor-Surface: 4mm (Mechanical And Optical Surface Detection)
- Electronics: DAE3 Sn577; Calibrated: 11/11/2005
- Phantom: SAM-A; Type: QD 000 P40 C; Serial: TP-1303
- Measurement SW: DASY4, V4.6 Build 23; Postprocessing SW: SEMCAD, V1.8 Build 160

Ch661/Area Scan (41x81x1): Measurement grid: dx=15mm, dy=15mm
Maximum value of SAR (interpolated) = 0.754 mW/g

Ch661/Zoom Scan (5x5x7)/Cube 0: Measurement grid: dx=8mm, dy=8mm, dz=5mm
Reference Value = 17.9 V/m; Power Drift = -0.069 dB
Peak SAR (extrapolated) = 1.12 W/kg
SAR(1 g) = 0.664 mW/g; SAR(10 g) = 0.359 mW/g
Maximum value of SAR (measured) = 0.744 mW/g

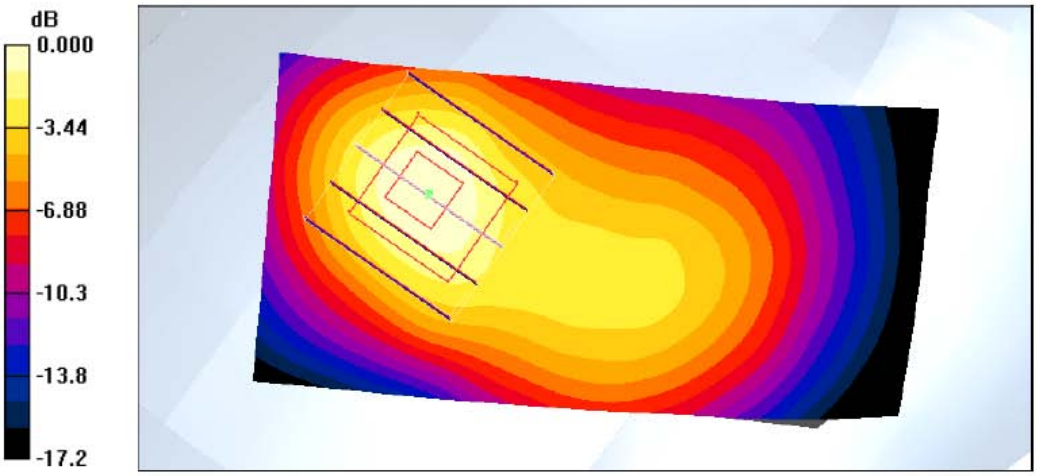

0 dB = 0.744mW/g

©2006 SPORTON International Inc. SAR Testing Lab
This report shall not be reproduced except in full, without the written approval of Sporton.

Test Laboratory: Sporton International Inc. SAR Testing Lab Date/Time: 2/22/2006 8:33:19 PM

Left Cheek_PCS Ch661_20060222

DUT: 5D2102; Type: Personal Tracking System

Communication System: PCS; Frequency: 1880 MHz;Duty Cycle: 1:8.3
Medium: HSL_1900 Medium parameters used: f = 1880 MHz; σ = 1.44 mho/m; ε_r = 39.1; ρ = 1000 kg/m^3
Ambient Temperature：21.9 ℃； Liquid Temperature：20.0 ℃

DASY4 Configuration:
- Probe: ET3DV6 - SN1788; ConvF(5.16, 5.16, 5.16); Calibrated: 9/30/2004
- Sensor-Surface: 4mm (Mechanical And Optical Surface Detection)
- Electronics: DAE3 Sn577; Calibrated: 11/11/2005
- Phantom: SAM-A; Type: QD 000 P40 C; Serial: TP-1303
- Measurement SW: DASY4, V4.6 Build 23; Postprocessing SW: SEMCAD, V1.8 Build 160

Ch661/Area Scan (41x81x1): Measurement grid: dx=15mm, dy=15mm
Maximum value of SAR (interpolated) = 0.786 mW/g

Ch661/Zoom Scan (5x5x7)/Cube 0: Measurement grid: dx=8mm, dy=8mm, dz=5mm
Reference Value = 19.1 V/m; Power Drift = -0.105 dB
Peak SAR (extrapolated) = 0.972 W/kg
SAR(1 g) = 0.696 mW/g; SAR(10 g) = 0.412 mW/g
Maximum value of SAR (measured) = 0.752 mW/g

Ch661/Zoom Scan (5x5x7)/Cube 1: Measurement grid: dx=8mm, dy=8mm, dz=5mm
Reference Value = 19.1 V/m; Power Drift = -0.105 dB
Peak SAR (extrapolated) = 1.51 W/kg
SAR(1 g) = 0.624 mW/g; SAR(10 g) = 0.276 mW/g
Maximum value of SAR (measured) = 0.650 mW/g

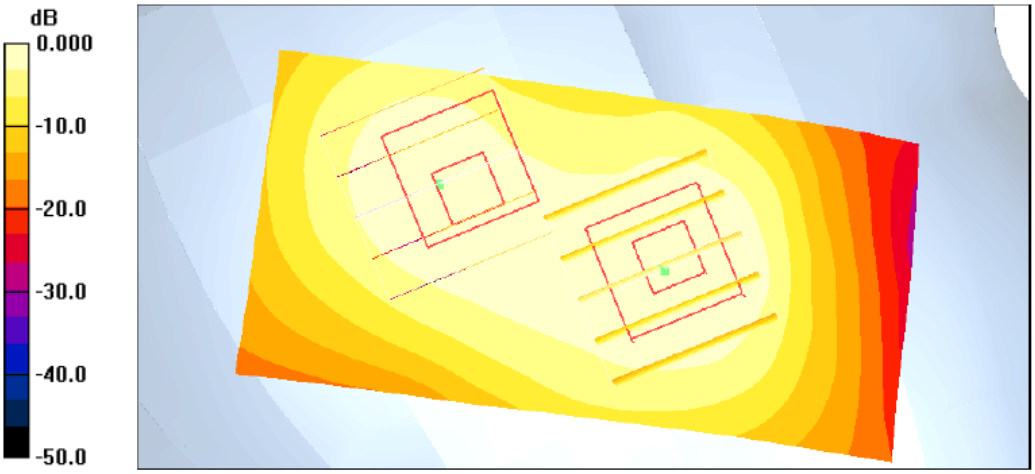

0 dB = 0.650mW/g

©2006 SPORTON International Inc. SAR Testing Lab
This report shall not be reproduced except in full, without the written approval of Sporton.

Test Laboratory: Sporton International Inc. SAR Testing Lab Date/Time: 2/22/2006 9:52:53 PM

Left Tilted_PCS Ch810_20060222

DUT: 5D2102; Type: Personal Tracking System

Communication System: PCS; Frequency: 1909.8 MHz;Duty Cycle: 1:8.3
Medium: HSL_1900 Medium parameters used: f = 1910 MHz; σ = 1.46 mho/m; ε_r = 39; ρ = 1000 kg/m^3
Ambient Temperature：22.4 ℃； Liquid Temperature：20.0 ℃

DASY4 Configuration:
- Probe: ET3DV6 - SN1788; ConvF(5.16, 5.16, 5.16); Calibrated: 9/30/2004
- Sensor-Surface: 4mm (Mechanical And Optical Surface Detection)
- Electronics: DAE3 Sn577; Calibrated: 11/11/2005
- Phantom: SAM-A; Type: QD 000 P40 C; Serial: TP-1303
- Measurement SW: DASY4, V4.6 Build 23; Postprocessing SW: SEMCAD, V1.8 Build 160

Ch810/Area Scan (41x81x1): Measurement grid: dx=15mm, dy=15mm
Maximum value of SAR (interpolated) = 1.22 mW/g

Ch810/Zoom Scan (5x5x7)/Cube 0: Measurement grid: dx=8mm, dy=8mm, dz=5mm
Reference Value = 20.9 V/m; Power Drift = -0.122 dB
Peak SAR (extrapolated) = 1.81 W/kg
SAR(1 g) = 1.01 mW/g; SAR(10 g) = 0.513 mW/g
Maximum value of SAR (measured) = 1.14 mW/g

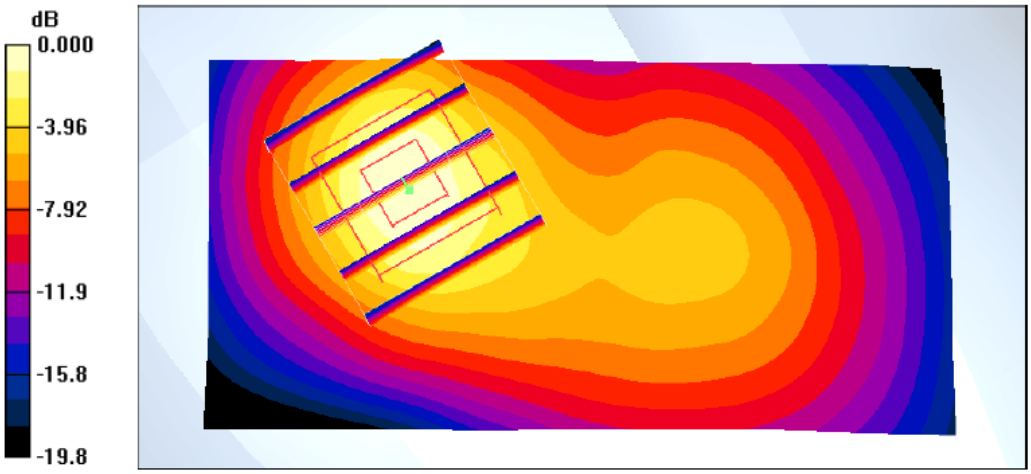

0 dB = 1.14mW/g

©2006 SPORTON International Inc. SAR Testing Lab
This report shall not be reproduced except in full, without the written approval of Sporton.

Test Laboratory: Sporton International Inc. SAR Testing Lab Date/Time: 2/23/2006 7:22:49 AM

Body_GSM850 Ch189_Keypad Up with 1.5cm Gap_20060223

DUT: 5D2102; Type: Personal Tracking System

Communication System: GSM850; Frequency: 836.4 MHz;Duty Cycle: 1:8.3
Medium: MSL_850 Medium parameters used : f = 836.4 MHz; σ = 0.94 mho/m; ε_r = 53.8; ρ = 1000 kg/m^3
Ambient Temperature：22.2 ℃; Liquid Temperature：21.1 ℃

DASY4 Configuration:
- Probe: ET3DV6 - SN1788; ConvF(6.53, 6.53, 6.53); Calibrated: 9/30/2004
- Sensor-Surface: 4mm (Mechanical And Optical Surface Detection)
- Electronics: DAE3 Sn577; Calibrated: 11/11/2005
- Phantom: SAM-A; Type: QD 000 P40 C; Serial: TP-1303
- Measurement SW: DASY4, V4.6 Build 23; Postprocessing SW: SEMCAD, V1.8 Build 160

Ch189/Area Scan (41x81x1): Measurement grid: dx=15mm, dy=15mm
Maximum value of SAR (interpolated) = 0.265 mW/g

Ch189/Zoom Scan (5x5x7)/Cube 0: Measurement grid: dx=8mm, dy=8mm, dz=5mm
Reference Value = 15.2 V/m; Power Drift = -0.108 dB
Peak SAR (extrapolated) = 0.315 W/kg
SAR(1 g) = 0.245 mW/g; SAR(10 g) = 0.174 mW/g
Maximum value of SAR (measured) = 0.262 mW/g

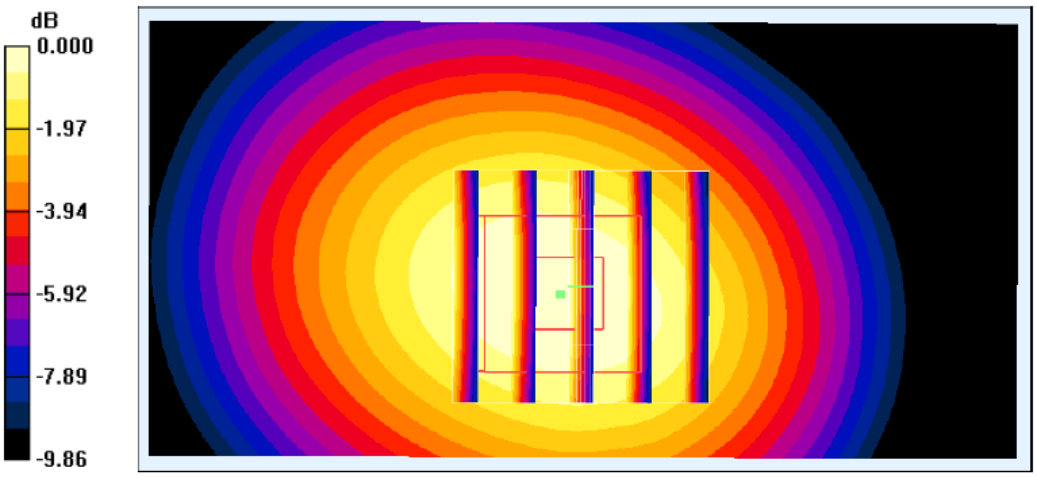

0 dB = 0.262mW/g

©2006 SPORTON International Inc. SAR Testing Lab
This report shall not be reproduced except in full, without the written approval of Sporton.

Test Laboratory: Sporton International Inc. SAR Testing Lab Date/Time: 2/23/2006 7:57:30 AM

Body_GSM850 Ch128_Keypad Down with 1.5cm Gap_20060223

DUT: 5D2102; Type: Personal Tracking System

Communication System: GSM850; Frequency: 824.2 MHz;Duty Cycle: 1:8.3
Medium: MSL_850 Medium parameters used : f = 824.2 MHz; σ = 0.927 mho/m; ε_r = 53.9; ρ = 1000 kg/m^3
Ambient Temperature：22.4 ℃； Liquid Temperature：21.1 ℃

DASY4 Configuration:
- Probe: ET3DV6 - SN1788; ConvF(6.53, 6.53, 6.53); Calibrated: 9/30/2004
- Sensor-Surface: 4mm (Mechanical And Optical Surface Detection)
- Electronics: DAE3 Sn577; Calibrated: 11/11/2005
- Phantom: SAM-A; Type: QD 000 P40 C; Serial: TP-1303
- Measurement SW: DASY4, V4.6 Build 23; Postprocessing SW: SEMCAD, V1.8 Build 160

Ch128/Area Scan (41x81x1): Measurement grid: dx=15mm, dy=15mm
Maximum value of SAR (interpolated) = 0.378 mW/g

Ch128/Zoom Scan (5x5x7)/Cube 0: Measurement grid: dx=8mm, dy=8mm, dz=5mm
Reference Value = 19.3 V/m; Power Drift = 0.005 dB
Peak SAR (extrapolated) = 0.443 W/kg
SAR(1 g) = 0.350 mW/g; SAR(10 g) = 0.247 mW/g
Maximum value of SAR (measured) = 0.372 mW/g

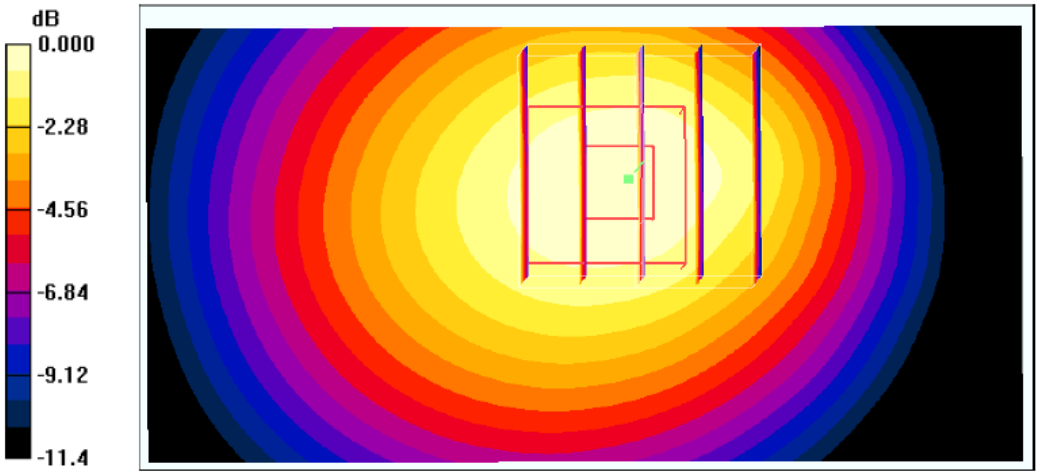

0 dB = 0.372mW/g

©2006 SPORTON International Inc. SAR Testing Lab
This report shall not be reproduced except in full, without the written approval of Sporton.

Test Laboratory: Sporton International Inc. SAR Testing Lab Date/Time: 2/24/2006 1:10:18 AM

Body_PCS Ch661_Keypad Up with 1.5cm Gap_20060224

DUT: 5D2102; Type: Personal Tracking System

Communication System: PCS; Frequency: 1880 MHz;Duty Cycle: 1:8.3
Medium: MSL_1900 Medium parameters used: f = 1880 MHz; σ = 1.56 mho/m; ε_r = 52.7; ρ = 1000 kg/m^3
Ambient Temperature：21.6 ℃； Liquid Temperature：21.3 ℃

DASY4 Configuration:
- Probe: ET3DV6 - SN1788; ConvF(4.56, 4.56, 4.56); Calibrated: 9/30/2004
- Sensor-Surface: 4mm (Mechanical And Optical Surface Detection)
- Electronics: DAE3 Sn577; Calibrated: 11/11/2005
- Phantom: SAM-B; Type: QD 000 P40 C; Serial: TP-1383
- Measurement SW: DASY4, V4.6 Build 23; Postprocessing SW: SEMCAD, V1.8 Build 160

Ch661/Area Scan (41x81x1): Measurement grid: dx=15mm, dy=15mm
Maximum value of SAR (interpolated) = 0.200 mW/g

Ch661/Zoom Scan (5x5x7)/Cube 0: Measurement grid: dx=8mm, dy=8mm, dz=5mm
Reference Value = 6.36 V/m; Power Drift = -0.105 dB
Peak SAR (extrapolated) = 0.259 W/kg
SAR(1 g) = 0.183 mW/g; SAR(10 g) = 0.119 mW/g
Maximum value of SAR (measured) = 0.198 mW/g

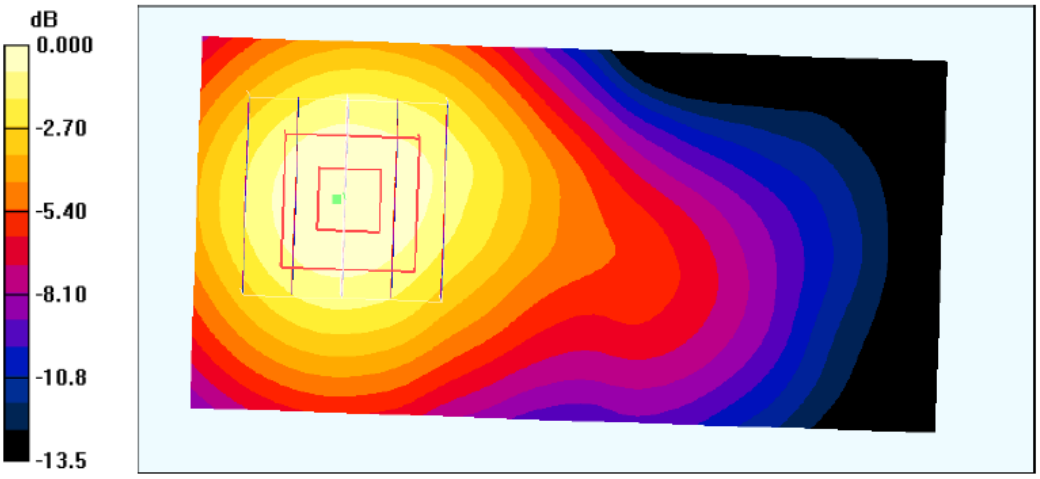

0 dB = 0.198mW/g

©2006 SPORTON International Inc. SAR Testing Lab
This report shall not be reproduced except in full, without the written approval of Sporton.

Test Laboratory: Sporton International Inc. SAR Testing Lab Date/Time: 2/24/2006 2:03:52 AM

Body_PCS Ch810_Keypad Down with 1.5cm Gap_20060224

DUT: 5D2102; Type: Personal Tracking System

Communication System: PCS; Frequency: 1909.8 MHz;Duty Cycle: 1:8.3
Medium: MSL_1900 Medium parameters used: f = 1910 MHz; σ = 1.59 mho/m; ε_r = 52.7; ρ = 1000 kg/m^3
Ambient Temperature：21.6 ℃； Liquid Temperature：21.3 ℃

DASY4 Configuration:
- Probe: ET3DV6 - SN1788; ConvF(4.56, 4.56, 4.56); Calibrated: 9/30/2004
- Sensor-Surface: 4mm (Mechanical And Optical Surface Detection)
- Electronics: DAE3 Sn577; Calibrated: 11/11/2005
- Phantom: SAM-B; Type: QD 000 P40 C; Serial: TP-1383
- Measurement SW: DASY4, V4.6 Build 23; Postprocessing SW: SEMCAD, V1.8 Build 160

Ch810/Area Scan (41x81x1): Measurement grid: dx=15mm, dy=15mm
Maximum value of SAR (interpolated) = 0.284 mW/g

Ch810/Zoom Scan (5x5x7)/Cube 0: Measurement grid: dx=8mm, dy=8mm, dz=5mm
Reference Value = 11.4 V/m; Power Drift = -0.029 dB
Peak SAR (extrapolated) = 0.395 W/kg
SAR(1 g) = 0.263 mW/g; SAR(10 g) = 0.168 mW/g
Maximum value of SAR (measured) = 0.282 mW/g

Ch810/Zoom Scan (5x5x7)/Cube 1: Measurement grid: dx=8mm, dy=8mm, dz=5mm
Reference Value = 11.4 V/m; Power Drift = -0.029 dB
Peak SAR (extrapolated) = 0.281 W/kg
SAR(1 g) = 0.176 mW/g; SAR(10 g) = 0.107 mW/g
Maximum value of SAR (measured) = 0.188 mW/g

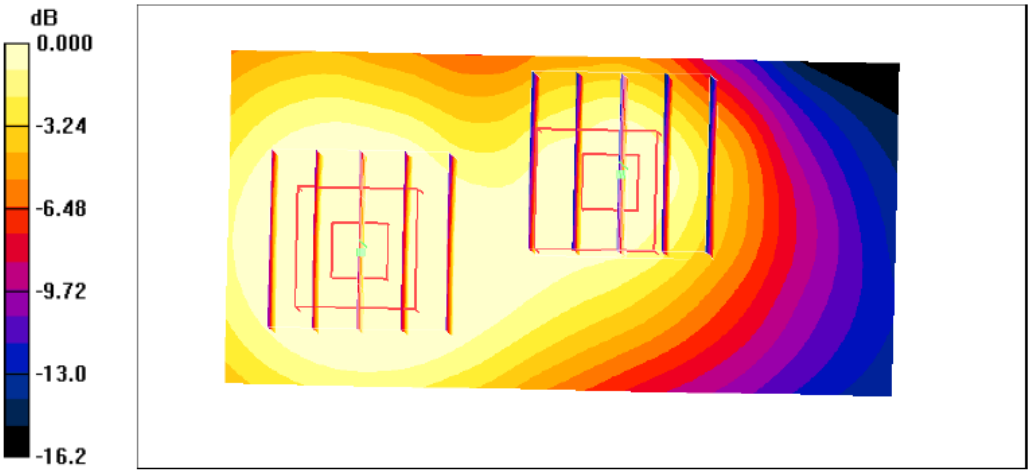

0 dB = 0.188mW/g

©2006 SPORTON International Inc. SAR Testing Lab
This report shall not be reproduced except in full, without the written approval of Sporton.

Test Laboratory: Sporton International Inc. SAR Testing Lab Date/Time: 2/22/2006 5:59:43 PM

Right Cheek_GSM850 Ch128_20060222_2D

DUT: 5D2102; Type: Personal Tracking System

Communication System: GSM850; Frequency: 824.2 MHz;Duty Cycle: 1:8.3
Medium: HSL_850 Medium parameters used : f = 824.2 MHz; σ = 0.901 mho/m; ε_r = 41.2; ρ = 1000 kg/m^3
Ambient Temperature : 22.4 ℃; Liquid Temperature : 20.0 ℃

DASY4 Configuration:
- Probe: ET3DV6 - SN1788; ConvF(6.74, 6.74, 6.74); Calibrated: 9/30/2004
- Sensor-Surface: 4mm (Mechanical And Optical Surface Detection)
- Electronics: DAE3 Sn577; Calibrated: 11/11/2005
- Phantom: SAM-B; Type: QD 000 P40 C; Serial: TP-1383
- Measurement SW: DASY4, V4.6 Build 23; Postprocessing SW: SEMCAD, V1.8 Build 160

Ch128/Area Scan (41x81x1): Measurement grid: dx=15mm, dy=15mm
Maximum value of SAR (interpolated) = 0.728 mW/g

Ch128/Zoom Scan (5x5x7)/Cube 0: Measurement grid: dx=8mm, dy=8mm, dz=5mm
Reference Value = 26.4 V/m; Power Drift = 0.024 dB
Peak SAR (extrapolated) = 0.927 W/kg
SAR(1 g) = 0.684 mW/g; SAR(10 g) = 0.473 mW/g
Maximum value of SAR (measured) = 0.734 mW/g

Ch128/Zoom Scan (5x5x7)/Cube 1: Measurement grid: dx=8mm, dy=8mm, dz=5mm
Reference Value = 26.4 V/m; Power Drift = 0.024 dB
Peak SAR (extrapolated) = 0.904 W/kg
SAR(1 g) = 0.600 mW/g; SAR(10 g) = 0.392 mW/g
Maximum value of SAR (measured) = 0.670 mW/g

©2006 SPORTON International Inc. SAR Testing Lab
This report shall not be reproduced except in full, without the written approval of Sporton.

Test Laboratory: Sporton International Inc. SAR Testing Lab Date/Time: 2/22/2006 9:52:53 PM

Left Tilted_PCS Ch810_20060222_2D

DUT: 5D2102; Type: Personal Tracking System

Communication System: PCS; Frequency: 1909.8 MHz;Duty Cycle: 1:8.3
Medium: HSL_1900 Medium parameters used: f = 1910 MHz; σ = 1.46 mho/m; ε_r = 39; ρ = 1000 kg/m^3
Ambient Temperature : 22.4 ℃; Liquid Temperature : 20.0 ℃

DASY4 Configuration:
- Probe: ET3DV6 - SN1788; ConvF(5.16, 5.16, 5.16); Calibrated: 9/30/2004
- Sensor-Surface: 4mm (Mechanical And Optical Surface Detection)
- Electronics: DAE3 Sn577; Calibrated: 11/11/2005
- Phantom: SAM-A; Type: QD 000 P40 C; Serial: TP-1303
- Measurement SW: DASY4, V4.6 Build 23; Postprocessing SW: SEMCAD, V1.8 Build 160

Ch810/Area Scan (41x81x1): Measurement grid: dx=15mm, dy=15mm
Maximum value of SAR (interpolated) = 1.22 mW/g

Ch810/Zoom Scan (5x5x7)/Cube 0: Measurement grid: dx=8mm, dy=8mm, dz=5mm
Reference Value = 20.9 V/m; Power Drift = -0.122 dB
Peak SAR (extrapolated) = 1.81 W/kg
SAR(1 g) = 1.01 mW/g; SAR(10 g) = 0.513 mW/g
Maximum value of SAR (measured) = 1.14 mW/g

©2006 SPORTON International Inc. SAR Testing Lab
This report shall not be reproduced except in full, without the written approval of Sporton.

Test Laboratory: Sporton International Inc. SAR Testing Lab Date/Time: 2/23/2006 7:57:30 AM

Body_GSM850 Ch128_Keypad Down with 1.5cm Gap_20060223_2D

DUT: 5D2102; Type: Personal Tracking System

Communication System: GSM850; Frequency: 824.2 MHz;Duty Cycle: 1:8.3
Medium: MSL_850 Medium parameters used : f = 824.2 MHz; σ = 0.927 mho/m; ε_r = 53.9; ρ = 1000 kg/m^3
Ambient Temperature : 22.4 ℃; Liquid Temperature : 21.1 ℃

DASY4 Configuration:
- Probe: ET3DV6 - SN1788; ConvF(6.53, 6.53, 6.53); Calibrated: 9/30/2004
- Sensor-Surface: 4mm (Mechanical And Optical Surface Detection)
- Electronics: DAE3 Sn577; Calibrated: 11/11/2005
- Phantom: SAM-A; Type: QD 000 P40 C; Serial: TP-1303
- Measurement SW: DASY4, V4.6 Build 23; Postprocessing SW: SEMCAD, V1.8 Build 160

Ch128/Area Scan (41x81x1): Measurement grid: dx=15mm, dy=15mm
Maximum value of SAR (interpolated) = 0.378 mW/g

Ch128/Zoom Scan (5x5x7)/Cube 0: Measurement grid: dx=8mm, dy=8mm, dz=5mm
Reference Value = 19.3 V/m; Power Drift = 0.005 dB
Peak SAR (extrapolated) = 0.443 W/kg
SAR(1 g) = 0.350 mW/g; SAR(10 g) = 0.247 mW/g
Maximum value of SAR (measured) = 0.372 mW/g

©2006 SPORTON International Inc. SAR Testing Lab
This report shall not be reproduced except in full, without the written approval of Sporton.

Test Laboratory: Sporton International Inc. SAR Testing Lab Date/Time: 2/24/2006 2:03:52 AM

Body_PCS Ch810_Keypad Down with 1.5cm Gap_20060224_2D

DUT: 5D2102; Type: Personal Tracking System

Communication System: PCS; Frequency: 1909.8 MHz;Duty Cycle: 1:8.3
Medium: MSL_1900 Medium parameters used: f = 1910 MHz; σ = 1.59 mho/m; ε_r = 52.7; ρ = 1000 kg/m^3
Ambient Temperature : 21.6 ℃; Liquid Temperature : 21.3 ℃

DASY4 Configuration:
- Probe: ET3DV6 - SN1788; ConvF(4.56, 4.56, 4.56); Calibrated: 9/30/2004
- Sensor-Surface: 4mm (Mechanical And Optical Surface Detection)
- Electronics: DAE3 Sn577; Calibrated: 11/11/2005
- Phantom: SAM-B; Type: QD 000 P40 C; Serial: TP-1383
- Measurement SW: DASY4, V4.6 Build 23; Postprocessing SW: SEMCAD, V1.8 Build 160

Ch810/Area Scan (41x81x1): Measurement grid: dx=15mm, dy=15mm
Maximum value of SAR (interpolated) = 0.284 mW/g

Ch810/Zoom Scan (5x5x7)/Cube 0: Measurement grid: dx=8mm, dy=8mm, dz=5mm
Reference Value = 11.4 V/m; Power Drift = -0.029 dB
Peak SAR (extrapolated) = 0.395 W/kg
SAR(1 g) = 0.263 mW/g; SAR(10 g) = 0.168 mW/g
Maximum value of SAR (measured) = 0.282 mW/g

Ch810/Zoom Scan (5x5x7)/Cube 1: Measurement grid: dx=8mm, dy=8mm, dz=5mm
Reference Value = 11.4 V/m; Power Drift = -0.029 dB
Peak SAR (extrapolated) = 0.281 W/kg
SAR(1 g) = 0.176 mW/g; SAR(10 g) = 0.107 mW/g
Maximum value of SAR (measured) = 0.188 mW/g

©2006 SPORTON International Inc. SAR Testing Lab
This report shall not be reproduced except in full, without the written approval of Sporton.

Appendix C – Calibration Data

Calibration Laboratory of
Schmid & Partner
Engineering AG
Zeughausstrasse 43, 8004 Zurich, Switzerland

S Schweizerischer Kalibrierdienst
C Service suisse d'étalonnage
Servizio svizzero di taratura
S Swiss Calibration Service

Accredited by the Swiss Federal Office of Metrology and Accreditation
The Swiss Accreditation Service is one of the signatories to the EA Multilateral Agreement for the recognition of calibration certificates

Accreditation No.: SCS 108

Client: Sporton (Auden)

Certificate No: D900V2-190_Jul05

CALIBRATION CERTIFICATE

Object	D900V2 - SN: 190
Calibration procedure(s)	QA CAL-05.v6 Calibration procedure for dipole validation kits
Calibration date:	July 19, 2005
Condition of the calibrated item	In Tolerance

This calibration certificate documents the traceability to national standards, which realize the physical units of measurements (SI). The measurements and the uncertainties with confidence probability are given on the following pages and are part of the certificate.

All calibrations have been conducted in the closed laboratory facility: environment temperature (22 ± 3)°C and humidity < 70%.

Calibration Equipment used (M&TE critical for calibration)

Primary Standards	ID #	Cal Date (Calibrated by, Certificate No.)	Scheduled Calibration
Power meter EPM E442	GB37480704	12-Oct-04 (METAS, No. 251-00412)	Oct-05
Power sensor HP 8481A	US37292783	12-Oct-04 (METAS, No. 251-00412)	Oct-05
Reference 20 dB Attenuator	SN: 5086 (20g)	10-Aug-04 (METAS, No 251-00402)	Aug-05
Reference 10 dB Attenuator	SN: 5047.2 (10r)	10-Aug-04 (METAS, No 251-00402)	Aug-05
Reference Probe ET3DV6	SN 1507	26-Oct-04 (SPEAG, No. ET3-1507_Oct04)	Oct-05
DAE4	SN 601	07-Jan-05 (SPEAG, No. DAE4-601_Jan05)	Jan-06

Secondary Standards	ID #	Check Date (in house)	Scheduled Check
Power sensor HP 8481A	MY41092317	18-Oct-02 (SPEAG, in house check Oct-03)	In house check: Oct-05
RF generator R&S SML-03	100696	27-Mar-02 (SPEAG, in house check Dec-03)	In house check: Dec-05
Network Analyzer HP 8753E	US37390585 S4206	18-Oct-01 (SPEAG, in house check Nov-04)	In house check: Nov-05

	Name	Function	Signature
Calibrated by:	Judith Müller	Laboratory Technician	
Approved by:	Katja Pokovic	Technical Manager	

Issued: July 20, 2005

This calibration certificate shall not be reproduced except in full without written approval of the laboratory.

Certificate No: D900V2-190_Jul05 Page 1 of 9

©2006 SPORTON International Inc. SAR Testing Lab
This report shall not be reproduced except in full, without the written approval of Sporton.

Calibration Laboratory of
Schmid & Partner
Engineering AG
Zeughausstrasse 43, 8004 Zurich, Switzerland

S Schweizerischer Kalibrierdienst
C Service suisse d'étalonnage
S Servizio svizzero di taratura
Swiss Calibration Service

Accredited by the Swiss Federal Office of Metrology and Accreditation
The Swiss Accreditation Service is one of the signatories to the EA Multilateral Agreement for the recognition of calibration certificates

Accreditation No.: **SCS 108**

Glossary:

TSL	tissue simulating liquid
ConvF	sensitivity in TSL / NORM x,y,z
N/A	not applicable or not measured

Calibration is Performed According to the Following Standards:

a) IEEE Std 1528-2003, "IEEE Recommended Practice for Determining the Peak Spatial-Averaged Specific Absorption Rate (SAR) in the Human Head from Wireless Communications Devices: Measurement Techniques", December 2003
b) CENELEC EN 50361, "Basic standard for the measurement of Specific Absorption Rate related to human exposure to electromagnetic fields from mobile phones (300 MHz - 3 GHz), July 2001
c) Federal Communications Commission Office of Engineering & Technology (FCC OET), "Evaluating Compliance with FCC Guidelines for Human Exposure to Radiofrequency Electromagnetic Fields; Additional Information for Evaluating Compliance of Mobile and Portable Devices with FCC Limits for Human Exposure to Radiofrequency Emissions", Supplement C (Edition 01-01) to Bulletin 65

Additional Documentation:

d) DASY4 System Handbook

Methods Applied and Interpretation of Parameters:

- *Measurement Conditions:* Further details are available from the Validation Report at the end of the certificate. All figures stated in the certificate are valid at the frequency indicated.
- *Antenna Parameters with TSL:* The dipole is mounted with the spacer to position its feed point exactly below the center marking of the flat phantom section, with the arms oriented parallel to the body axis.
- *Feed Point Impedance and Return Loss:* These parameters are measured with the dipole positioned under the liquid filled phantom. The impedance stated is transformed from the measurement at the SMA connector to the feed point. The Return Loss ensures low reflected power. No uncertainty required.
- *Electrical Delay:* One-way delay between the SMA connector and the antenna feed point. No uncertainty required.
- *SAR measured:* SAR measured at the stated antenna input power.
- *SAR normalized:* SAR as measured, normalized to an input power of 1 W at the antenna connector.
- *SAR for nominal TSL parameters:* The measured TSL parameters are used to calculate the nominal SAR result.

©2006 SPORTON International Inc. SAR Testing Lab
This report shall not be reproduced except in full, without the written approval of Sporton.