EMI TEST REPORT
FCC PART 15 CLASS B

for

SAVITMICRO CO., LTD.

#45~46, Terminal Electronic Shopping 40-969,
Hangangro-3Ga, YongSan-Gu,
Seoul, South Korea

on the

External Enclosure
DMH-2101
FCC ID: T3CDMH-2101

Issued Date : March 08, 2006
Report Number : KSQ-FCC060308

Prepared By:

Test Date: March 06, 2006

Test Engineer: K. B. Cho
Printed Name Signature

Compliance Engineer: Y. Choi
Printed Name Signature

Korea Standard Quality Laboratories
Testing Laboratories for EMC and Safety Compliance
www.ksqlab.com #102, Jangduk-Dong, Hwasung-Shi, Kyunggi-Do, KOREA

This report may not be reproduced without the full written consent of Korea Standard Quality Laboratories.

1. General Information

1.1 Introduction

The EMI Test Report of Information Technology Equipment is prepared on behalf of named applicant in accordance with the ANSI C63.4. The test results reported in this document relate only to the item that was tested.

The detailed description of the measurement facility was found to be in compliance with the requirement of Section 2.948 of the FCC Rules. The Federal Communications Commission has the reports on file and is listed under Registration Number 100384. The scope of the accreditation covers the FCC Method - 47 CFR Part 15 or 18 of the Commission's Rules.

All measurements contained in this report were conducted in accordance with ANSI C63.4. The instrumentation utilized for the measurements conforms with CISPR16 Specification for Radio Disturbance and Immunity Measuring Apparatus and Methods. Some accessories are used to increase sensitivity and prevent overloading of the measuring instrument. Calibration checks are performed yearly on the instruments by a local calibration laboratories.

All radiated and conducted emission measurements are performed manually at Korea Standard Quality Laboratories (hereinafter referred to as "KSQLab"), #102, Jangduk-Dong, Hwasung-Shi, Kyunggi-Do, KOREA. The radiated emission measurements required by the FCC Rules were performed on 3 meter or 10 meter, Open Area Test Site, test range maintained by KSQLab. Complete ANSI 63.4 description and site attenuation measurement data records are maintained at the test facility and have been placed on file with the Federal Communications Commission. The power line conducted emission measurements were performed in a shielded enclosure also located at the same facility. The KSQLab EMC test facility in Hwasung-Shi are designated testing laboratory according to ISO/IEC 17025 by Radio Research Laboratory (RRL), Ministry of Information and Communication.

1.2 Product Description for Equipment Under Test (EUT)

SAVITMICRO CO., LTD.'s External Enclosure, Model No: DMH-2101, or the "EUT" as referred to in this report is a portable HDD case.

Main Features of EUT are:

▷ Computer interface: USB2.0

▷ LED indicators: Green light :writing and reading

▷ Writing speed: Environment test >17MB/s(according to computer configuration)
theoretically 480MB/s

▷ Reading speed: Environment test >21MB/s(according to computer configuration)
theoretically 480MB/s

▷ Dimension: 124(L) x 78(W) x 18(H)mm

1.3 Equipment Under Test

Description	Model Number	Serial Number	Manufacturer	Remarks
External Enclosure	DMH-2101	none	SAVITMICRO CO., LTD.	EUT

1.4 Host System Configuration

Description	Model Number	Serial Number	Manufacturer	Remarks
Host Computer	JT4811	none	JOOYON TECH Co., Ltd.	ATX
VGA Monitor	CB560BN	none	NamSeo	15"
Keyboard	SEM-DT35	22022689	Samsung Electric	PS/2
Mouse	76FSERIAL9D	1005213	Microsoft Corporation	Serial
Printer	2225C	3037S84200	Hwelett Packard	Parallel
Speaker	AN-808	none	CHNIA DONGGUAN	Jack
Microphone	C106N	none	COSY	Jack
HDD	HTS548020M9ATX0	123456	Hitachi Global Storage	2.5"

1.5 External I/O Cabling

Description	Length (m)	Port/From	Port/To	Remarks
Video Cable	1.5	Dsub/Host	Monitor	Shielded
Keyboard Cable	2.0	PS2/Host	Keyboard	Shielded
Mouse Cable	1.5	Dsub/Host	Mouse	Shielded
Printer Cable	1.5	Dsub/Host	Printer	Shielded
Speaker Cable	1.5	Jack/Host	Speaker	Shielded
Microphone Cable	2.0	Jack/Host	Microphone	Shielded
USB Cable	1.0	DC 5V/EUT	USB	Shielded
USB Cable	1.5	USB/EUT	USB	Shielded
1394 Cable	1.5	1394/EUT	1394	Shielded

1.6 Special Accessories

As shown in section 1.8, all interface cables used for compliance testing are shielded as normally supplied or by use respective component manufacturers.

1.7 EUT Modifications

No modifications were made to the EUT in order to achieve and maintain compliance to the standards described in this report.

1.8 Configuration of Test System

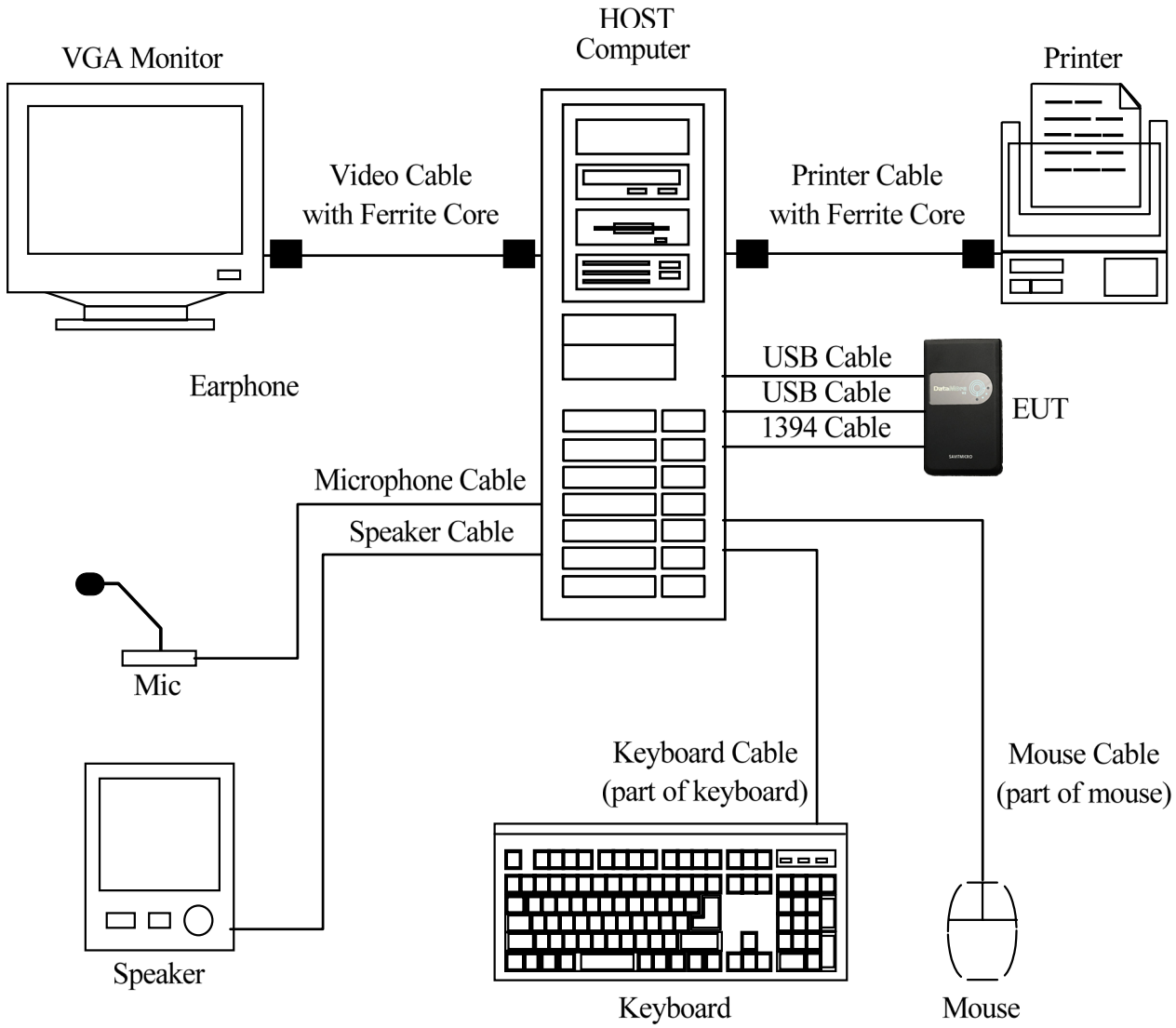

2. Test Performed

2.1 Conducted Emission Measurements

2.1.1 Test Description

The power line conducted emission measurements were performed in a shielded enclosure, using the setup in accordance with ANSI C63.4 conducted emission measurement procedure.

2.1.2 Test Equipments

Description	Manufacturer	Model Number	Serial Number	Cal. Due
Spectrum Analyzer	Advantest	3261A	21720240	09, 2006
LISN1	Electro Metrics	ANS-25/2	2535	09, 2006
LISN2	Kyoritsu	KNW-407	8-1010-14	09, 2006
Plotter	Hewlett Packard	7550B	3050A14513	n/a

2.1.3 Test Environments

Ambient Temperatures	Relative Humidity
15~35 °C	30~60 %

2.1.4 Test Limits

Frequency (MHz)	CISPR22 Limits			
	Class B (dBuV)		Class A (dBuV)	
	Quasi-peak	Average	Quasi-peak	Average
0.15 to 0.50	66.0 to 56.0	56.0 to 46.0	79.0	66.0
0.50 to 5.00	56.0	46.0	73.0	60.0
5.00 to 30.00	60.0	50.0	73.0	60.0

2.1.5 Test Procedure

Conducted emission levels were measured on each current-carrying line with the spectrum analyzer operating in the CISPR quasi-peak mode (or peak mode if applicable). The analyzer's 6dB bandwidth was set to 9kHz. The initial step in collecting conducted data is a spectrum analyzer peak scan of the measurement range. If the conducted emission exceed the average limit with the instrument set to the quasi-peak mode, the measurements are made in the average mode. The emission spectrum was scanned from 150kHz to 30MHz. The highest emission amplitudes relative to the appropriate limits were measured and have been recorded. Quasi-peak readings are distinguished with a "QP". The conducted emission test was performed with the EUT exercise program loaded, and the emissions were scanned between 150kHz to 30MHz on the HOT side and NEUTRAL side, herein referred to as H and N, respectively.

2.1.6 Test Configuration

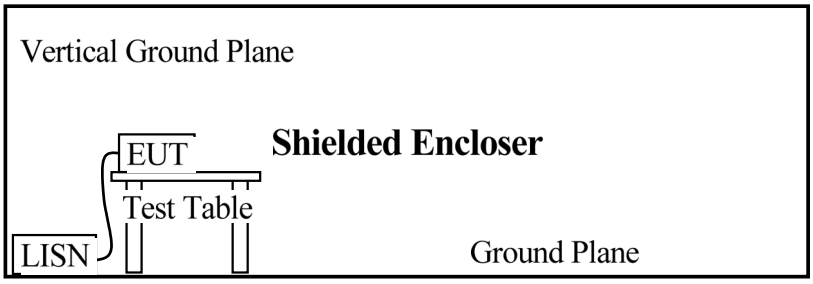

2.1.7 Test Results

According to the data in section 2.1.9, the EUT complied with the CISPR22 limits, and had the worst margin reading of:

-19.6dB at 0.31MHz in the NEUTRAL side.

2.1.8 Test Data

Line Conducted Emission				CISPR22 Class B		
Frequency (MHz)	Amplitude (dBuV)	Phase Hot/Neutral	Detector QP/AV/PK	Applicable Limit QP (dBuV)	Applicable Limit AV (dBuV)	Margin (dB)
0.16	34.3	N	PK	65.5	55.5	-31.2
0.18	37.5	N	PK	64.5	54.5	-27.0
0.21	38.9	N	PK	63.2	53.2	-24.3
0.25	38.3	H	PK	61.8	51.8	-23.5
0.31	40.4	N	PK	60.0	50.0	-19.6
0.41	35.5	N	PK	57.6	47.6	-22.1
0.52	32.2	N	PK	56.0	46.0	-23.8
0.62	30.3	N	PK	56.0	46.0	-25.7
0.72	30.3	N	PK	56.0	46.0	-25.7
0.82	29.5	N	PK	56.0	46.0	-26.5
0.92	30.3	N	PK	56.0	46.0	-25.7
2.57	29.3	N	PK	56.0	46.0	-26.7
8.50	28.9	H	PK	60.0	50.0	-31.1
10.20	28.1	H	PK	60.0	50.0	-31.9
11.40	22.7	H	PK	60.0	50.0	-37.3
14.00	27.7	N	PK	60.0	50.0	-32.3
15.25	26.5	H	PK	60.0	50.0	-33.5
21.35	25.8	N	PK	60.0	50.0	-34.2

Temperature: 20 °C Humidity: 45 % Test Date: March 06, 2006 Tested by: K. B. Cho

2.1.9 Plots of Test Data

Polarization: HOT (LIVE)

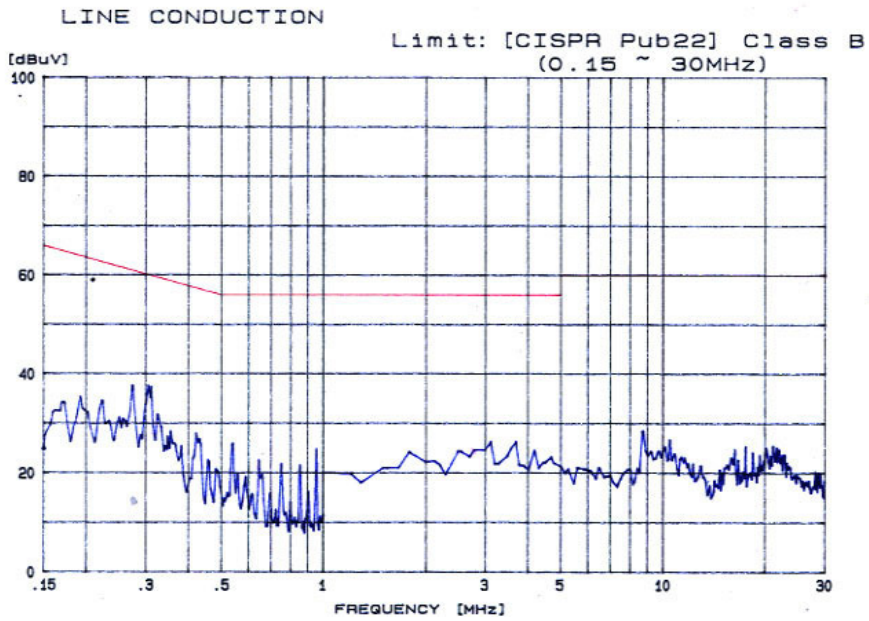

Polarization: NEUTRAL

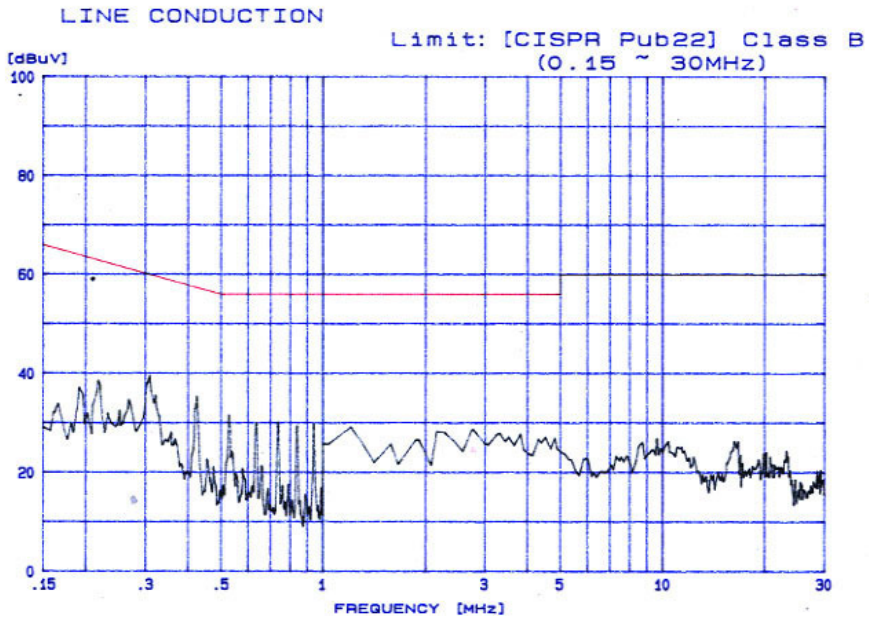

2.2 Radiated Emission Measurements

2.2.1 Test Description

The radiated emission measurements were performed in a Open Area Test Site (OATS), using the setup in accordance with ANSI C63.4 radiated emission measurement procedure.

2.2.2 Test Equipments

Description	Manufacturer	Model Number	Serial Number	Cal. Due
Spectrum Analyzer	Hewlett Packard	8568B	3217A05629	09, 2006
Spectrum Display	Hewlett Packard	85682A	3144A20886	09, 2006
RF Preselector	Hewlett Packard	85685A	3221A01366	09, 2006
Quasi-Peak Adapter	Hewlett Packard	85650A	3145A01652	09, 2006
Biconical Antenna	Electro Metrics	BIA-30S	164	03, 2007
Log Periodic Antenna	Electro Metrics	LPA-30	387	03, 2007
Turn Table	KSQ	KSQ-T10	KSQ98121	n/a
Antenna Mast	KSQ	KSQ-A10	KSQ98122	n/a

2.2.3 Test Environments

Ambient Temperatures	Relative Humidity
15~35 °C	30~60 %

2.2.4 Test Limits

Frequency (MHz)	FCC Part 15 Limits			
	Class B @3m		Class A @10m	
	(dBuV/m)	(uV/m)	(dBuV/m)	(uV/m)
30 to 88	40.0	100	39.5	90
88 to 216	43.5	150	43.5	150
216 to 960	46.0	200	46.5	210
above 960	54.0	500	49.5	300

2.2.5 Test Procedure

Before final measurements of radiated emission were made on the OATS, the EUT was scanned in semi-anechoic chamber in order to determine its emission spectrum signature. The physical arrangement of the test system and associated cabling was varied in order to determine the effect on the EUT's emission in amplitude, direction and frequency. This process was repeated during final radiated emission measurements on the OATS range, at each frequency, in order to ensure that maximum emissions amplitudes were attained.

The radiated emission test was performed with EUT exercise program loaded, and the emissions were scanned between 30MHz to 1000MHz using a HP 8568B spectrum analyzer. The spectrum analyzer's 6dB bandwidth was set to 120kHz, and the analyzer was operated in the CISPR quasi-peak detection mode.

At each frequency, the EUT was rotated 360 degrees, and the antenna was raised and lowered from 1 to 4 meters in order to determine the maximum emission levels. Measurements were taken using both HORIZONTAL and VERTICAL antenna polarization, herein referred to as H and V, respectively.

2.2.6 Field Strength Calculation

The Field Strength (FS) is calculated by adding the Antenna Factor (AF) and Cable Factor (CF) from the Measured Reading (MR). The basic equation with a sample calculation is as follows:

FS(dBuV/m) = MR(dBuV) + [AF(dB/m) + CF(dB)]

2.2.7 Test Configuration

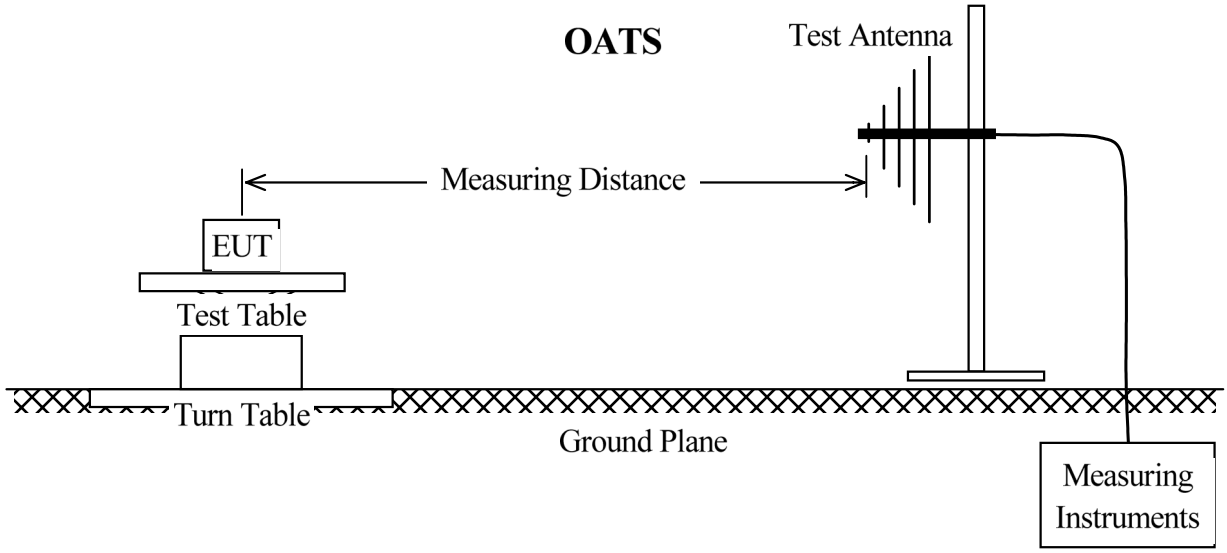

2.2.8 Test Results

According to the data in section 2.2.10, the EUT complied with the FCC Part 15 standards, and had the worst margin reading of:

-4.1dB at 50.13MHz in the HORIZONTAL antenna polarization.

2.2.9 Test Data

Indicated		Antenna		Correction Factor		Corrected Amplitude	FCC Part15 Class B		
Frequency (MHz)	Amplitude (dBuV/m)	Polar. (H/V)	Height (m)	Ant. (dB)	Cable (dB)	(dBuV/m)	Applicable Limit (dBuV/m)	Applicable Limit (uV/m)	Margin (dB)
50.13	25.8	H	3.8	8.8	1.3	35.9	40.0	100	-4.1
73.75	23.2	H	3.7	6.6	1.5	31.3	40.0	100	-8.7
-	-	-	-	-	-	-	40.0	100	-
-	-	-	-	-	-	-	40.0	100	-
-	-	-	-	-	-	-	40.0	100	-
-	-	-	-	-	-	-	40.0	100	-
114.56	14.1	H	3.4	13.2	1.9	29.2	43.5	150	-14.3
145.79	14.5	H	3.2	15.2	2.2	31.9	43.5	150	-11.6
165.95	14.7	V	3.0	15.5	2.3	32.5	43.5	150	-11.0
196.64	17.2	V	2.8	15.7	2.5	35.4	43.5	150	-8.1
-	-	-	-	-	-	-	43.5	150	-
-	-	-	-	-	-	-	43.5	150	-
242.99	22.7	V	2.6	16.2	2.9	41.8	46.0	200	-4.2
275.43	16.3	H	2.5	17.8	3.1	37.2	46.0	200	-8.8
340.21	20.1	V	2.3	15.2	3.6	38.9	46.0	200	-7.1
432.03	18.2	V	2.0	16.0	4.2	38.4	46.0	200	-7.6
598.87	17.7	V	1.8	18.9	5.2	41.8	46.0	200	-4.2
786.58	14.0	V	1.6	21.9	5.9	41.8	46.0	200	-4.2
-	-	-	-	-	-	-	54.0	500	-

Temperature: 20 °C Humidity: 45 % Test Date: March 06, 2006 Tested by: K. B. Cho