Diffusion : Internal ☐ External ☒
Status : Confidential ☐ Limited ☐ Extended ☒

CONFIDENTIAL INFORMATION
This document is the exclusive property of LDL Technology.
No content may be transmitted or reproduced in any form without written permission.

Mounting procedure
TCU

Reference : C3131320010 **Version A1**

Internal Approval			
	Author	***Check***	***Approver***
Name and Department	D. LUCE (MD)	S.BAIGET (SY)	P. GABAUDAN (PM)
Date	13/04/15	15/04/15	15/04/15
Signature			

COMPANY	NAME	DATE	SIGNATURE

Copyrights 2015

MODIFCATION LIST:

Version	Modification date	Chapter / pages	Comments	Author
A0	13/04/2015	All	Creation	D.LUCE
A1	17/06/2015	§8	Modification of regulatory notices	M.GUERIN

CONFIDENTIAL INFORMATION
This document is the exclusive property of LDL Technology.
No content may be transmitted or reproduced in any form without written permission.

Copyrights 2015

CONFIDENTIAL INFORMATION
This document is the exclusive property of LDL Technology.
No content may be transmitted or reproduced in any form without written permission.

Chapter :

1. PURPOSE....4
2. TCU PRODUCT DESCRIPTION....4
2.1. Part Numbers....4
2.2. External Description....4
3. MAIN FEATURES....6
3.1. Electronic Features....6
3.2. Mechanical Features....6
3.3. Connector Pin Out....6
4. TCU MOUNTING INTERFACE....7
5. TCU MOUNTING RECOMMENDATIONS....7
6. TCU POWER SUPPLY CONNECTION....9
7. TCU LOCATING RECOMMENDATIONS....11
8. FCC/IC Regulatory notices....13
8.1. Modification statement:....13
8.2. Interference statement:....13
8.3. Radiation Exposure Statement:....13
8.4. FCC Class B digital device notice....14
9. APPENDIX....14

Copyrights 2015

CONFIDENTIAL INFORMATION
This document is the exclusive property of LDL Technology.
No content may be transmitted or reproduced in any form without written permission.

1. PURPOSE

This document is the Mounting procedure of the TCU.
TCU is a part of a Tire Pressure Monitoring System.
The Telematic Control Unit (TCU) collects information on the vehicle and transmits it over the GSM network to a back-end server. It can capture data from CAN, GPS and TPMS.

2. TCU PRODUCT DESCRIPTION.

2.1. PART NUMBERS

TCU Part Number	Region	Model
13 132 0000	Europe Middle East Africa (EMEA)	13 123
13 144 0000	Europe Middle East Africa (EMEA)	13 144
14 119 0000	North America (NA)	14 119
15 046 0000	North America (NA)	14 119

2.2. EXTERNAL DESCRIPTION

Part	Material	Characteristics
TCU	all electronic parts	-
1 Housing	PBT GF20 - UL94 V0	Black
1 Cover	PBT GF20 - UL94 V0	Black
1 10 Ways FCI	PBT GF20 - UL94 V0	Black
8 Screws	Steel C 1018	-
3 Silent-blocks	EPDM	Black
3 Spacers	Stainless steel A2	-
1 Nitto Vent	NA (assembly)	Black

Copyrights 2015

CONFIDENTIAL INFORMATION
This document is the exclusive property of LDL Technology.
No content may be transmitted or reproduced in any form without written permission.

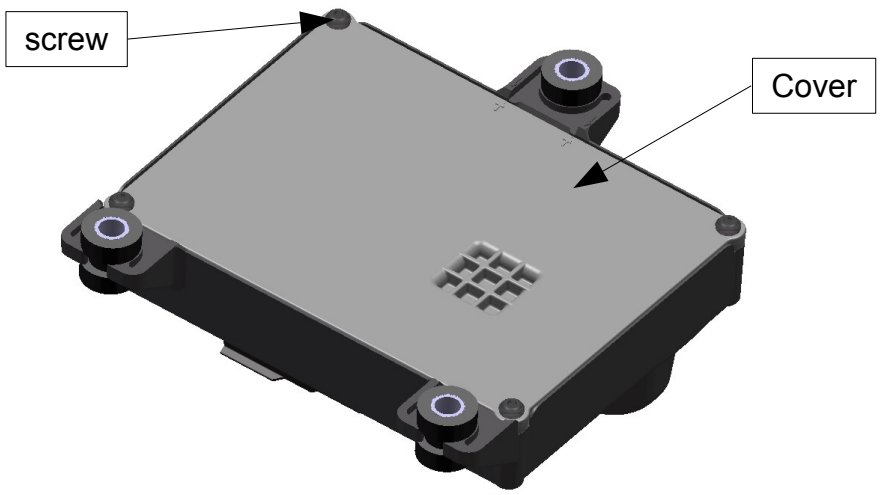

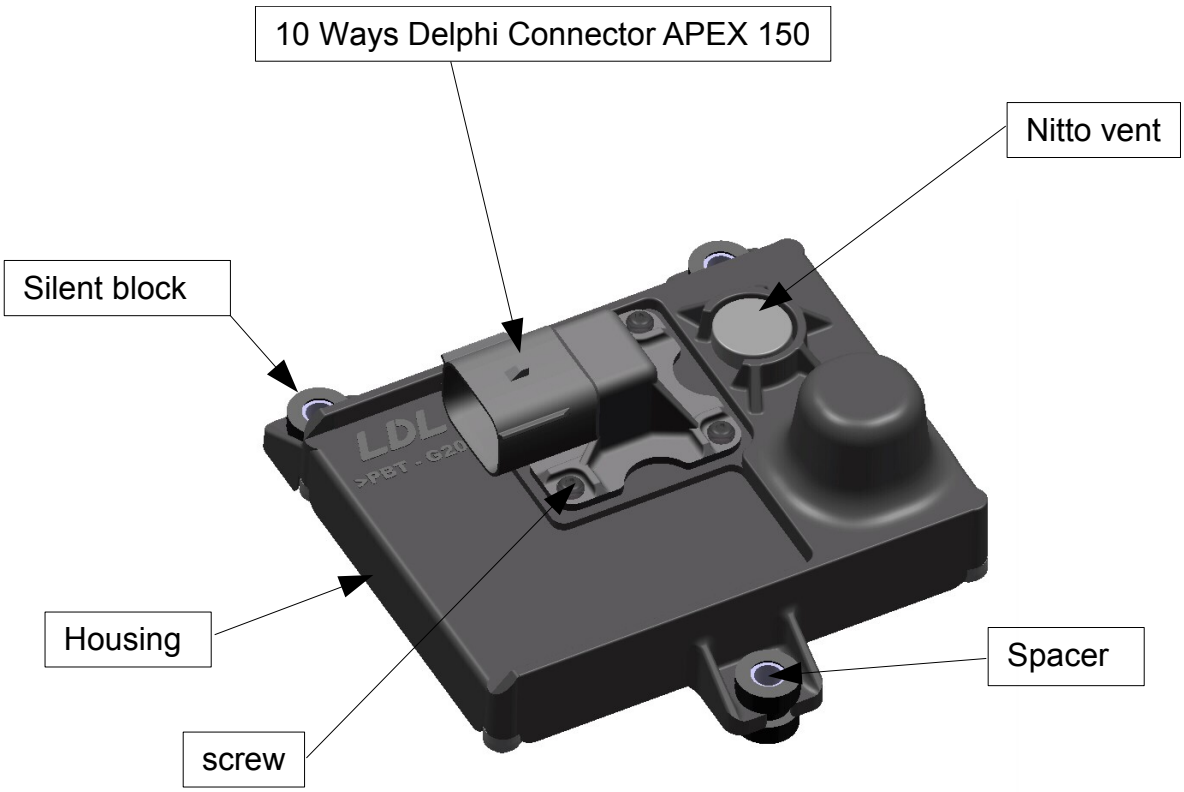

Copyrights 2015

CONFIDENTIAL INFORMATION
This document is the exclusive property of LDL Technology.
No content may be transmitted or reproduced in any form without written permission.

3. MAIN FEATURES

3.1. ELECTRONIC FEATURES

Power supply (5A fuse protected)	7 to 32 V
Operating current	1 A
Temperature operating range	-40°C to 85°C
Storage temperature range	0 to 30°C
Legal Regulations	R&TTE (99/5/EC) FCC/IC PTCRB E marking
Antennas (GSM, GPS and RF)	Internal

3.2. MECHANICAL FEATURES

Total Mass	256 g
Dimensions (L x W x H)	123 x 120 x 50 mm
Connector (10 Ways)	FCI - Delphi Connector APEX 150
Tightness	IP 68 & IP69K
Mounting	LDL Brackets (see §4)
Wiring	LDL harnesses (see §6)

3.3. CONNECTOR PIN OUT

Pin number	Mnemonic	Function
1	CAN HI	CAN High
2	-	Reserved
3	CAN LO	CAN Low
4	BBM+	BBM positive
5	IGN	Ignition status (KL15)
6	-	Reserved
7	VBAT	Vehicle battery positive (KL30)
8	-	Reserved
9	GND	Vehicle battery negative (KL31)
10	TEMP	BBM temperature

Copyrights 2015

CONFIDENTIAL INFORMATION
This document is the exclusive property of LDL Technology.
No content may be transmitted or reproduced in any form without written permission.

4. TCU MOUNTING INTERFACE.

The TCU is mounted on a plane surface fixed on the vehicle frame. The TCU has 3 mounting points equipped with silent blocks. The TCU must be fixed on a support (available on demand). This support (TCU interface) is defined in the appendix.

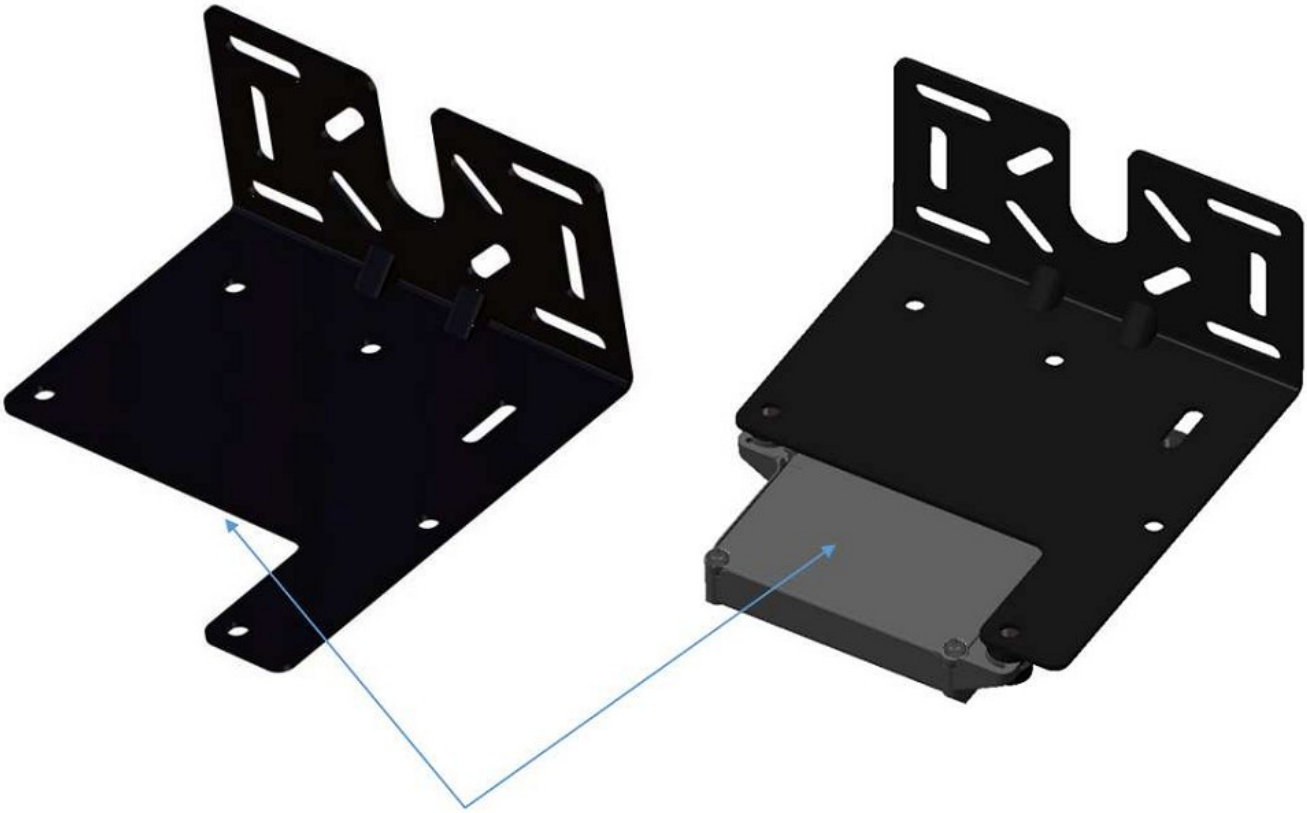

TCU area free from metallic material
(refer to the drawing in appendix for detailed area specifications)

5. TCU MOUNTING RECOMMENDATIONS

Screws (not provided by LDL) must be tightened @ 4,5 Nm +/-0,5 Nm. It's recommended to use an elastic washer (Belleville type) between screw head and silent block with spacer. Stainless steel is recommended.
M6 bolts are recommended, the screw for a fixation on a base plate fixation in thickness 2mm must have a length equal or higher than 20mm.

Copyrights 2015

CONFIDENTIAL INFORMATION
This document is the exclusive property of LDL Technology.
No content may be transmitted or reproduced in any form without written permission.

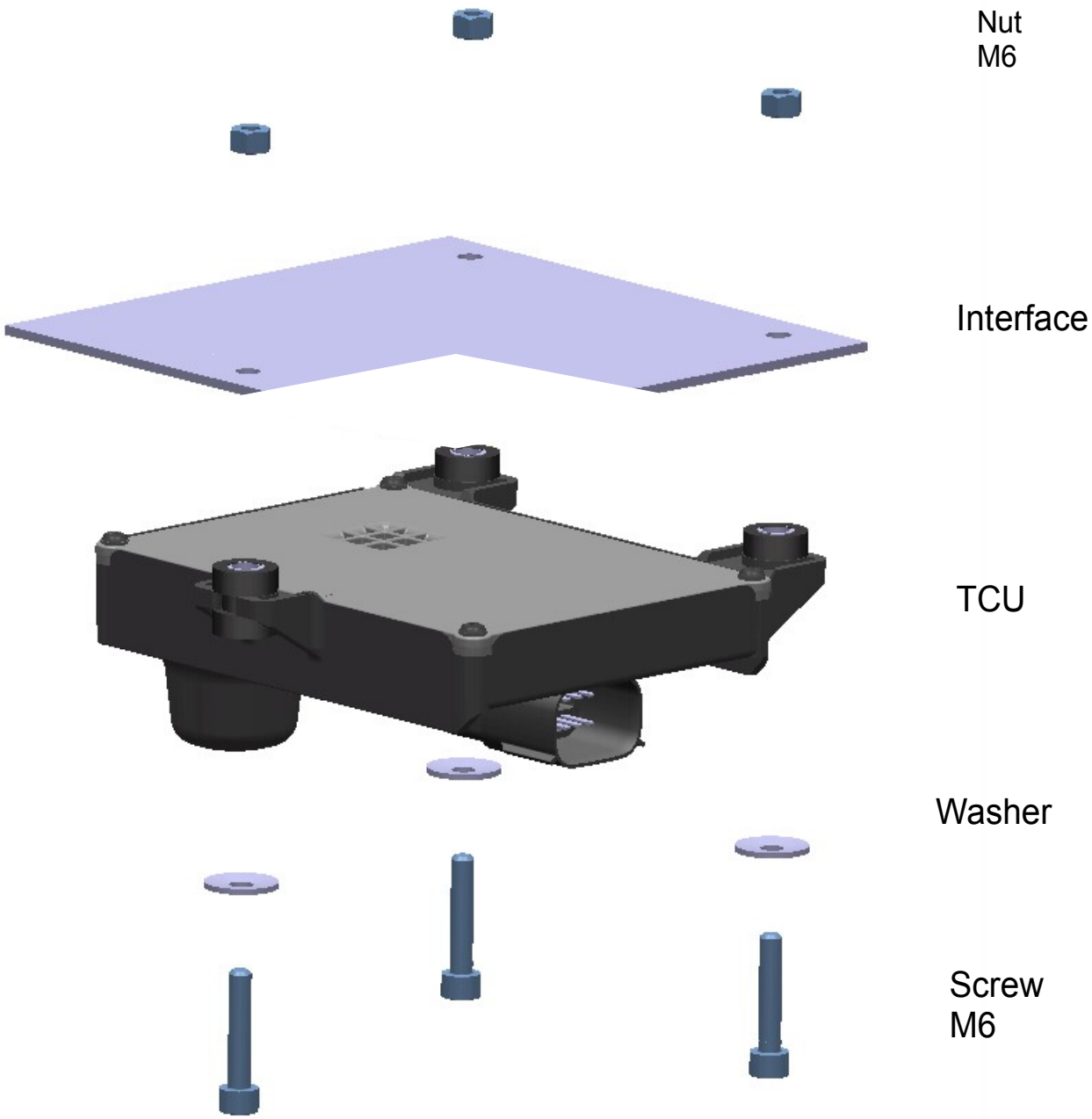

TCU Assembled onto support

TCU Assembly

Universal fixation kit can be provided by LDL. It consists of a base plate and an extension plate. A combination of these parts is able to fit all vehicle types.

Copyrights 2015

CONFIDENTIAL INFORMATION
This document is the exclusive property of LDL Technology.
No content may be transmitted or reproduced in any form without written permission.

LDL TCU bracket combinations

To link a base support to an extension support , 2 bolts are needed, type M6, length 16mm, with 2 M6 washers (1 standard type and 1 Belleville type).

6. TCU POWER SUPPLY CONNECTION

Cable must be fastened between 100mm and 200 mm away from its TCU starting point.

Verify that no tension stress is applied onto the harness between TCU connector and the fixation point onto the vehicle chassis AND **after** connection of the harness connector onto the TCU connector.

From the TCU connector base to the fixation point away TCU (100 to 200 mm), the harness cable must be in line as much as possible with the TCU connector terminal axis and not curved over 30° see picture on next page below.

The connector must be secured after clipping (move the red CPA (Connector Position Assurance) onto the harness connector toward the TCU connector)

Copyrights 2015

CONFIDENTIAL INFORMATION
This document is the exclusive property of LDL Technology.
No content may be transmitted or reproduced in any form without written permission.

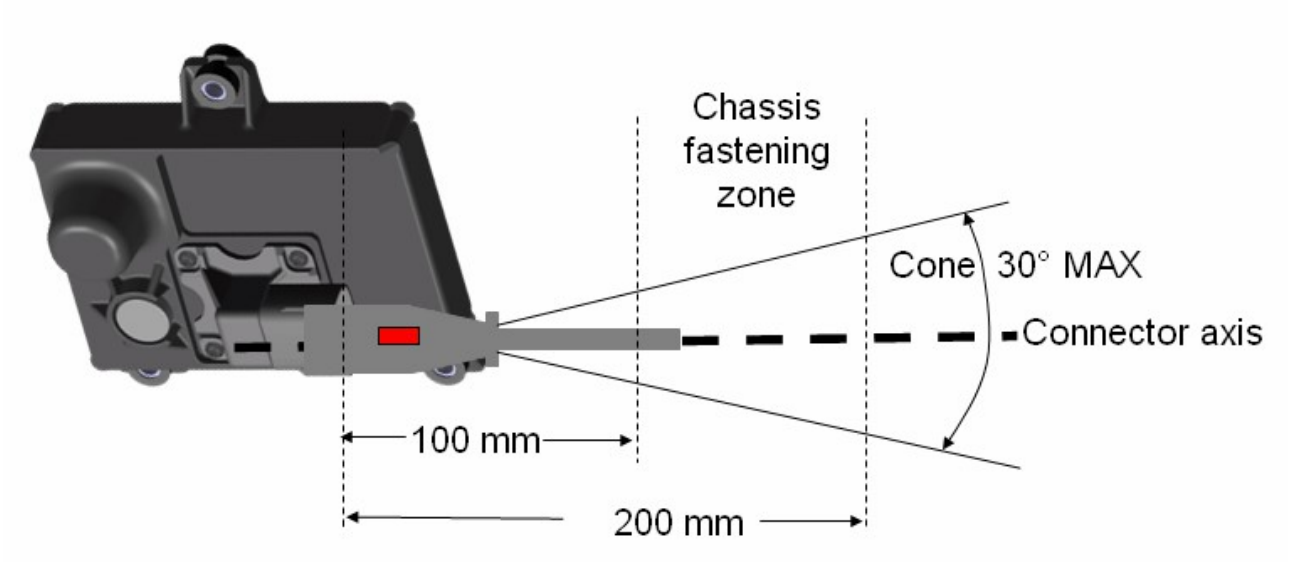

Cable management in the TCU neighborhood.

Incorrect wiring will prevent the system from operating properly.

TCU has to be connected to +12V or +24V through 5A fuse protection.

TCU must be connected on Ignition (IGN).

When TCU and ECU or EBS are connected to a same CAN network, ***they must share the same ground.***

LDL Technology can provide the wiring harness (see table below) :

Nota : This cable has a ***minimum curvature radius about 80mm***.

Reference	***Description***
11 231 0000	Harness CAN (#1-Can)
11 232 0000	Harness (#1)
15 018 0000	Cable TCU CAN 1,2m - Wabco
15 017 0000	Cable TCU CAN 1,2m - EB+ gen3 - Haldex
15 016 0000	Cable TCU CAN Y 1,2m - EB+ gen2 - Haldex
15 015 0000	Cable TCU CAN 1,2m - EB+ gen2 - Haldex
15 014 0000	Cable TCU CAN 1,2m Deutsh 4 contacts 0462-201-16141 - Knorr
15 024 0000	Cable TCU CAN 1,2m – WABCO GIO5

Copyrights 2015

CONFIDENTIAL INFORMATION
This document is the exclusive property of LDL Technology.
No content may be transmitted or reproduced in any form without written permission.

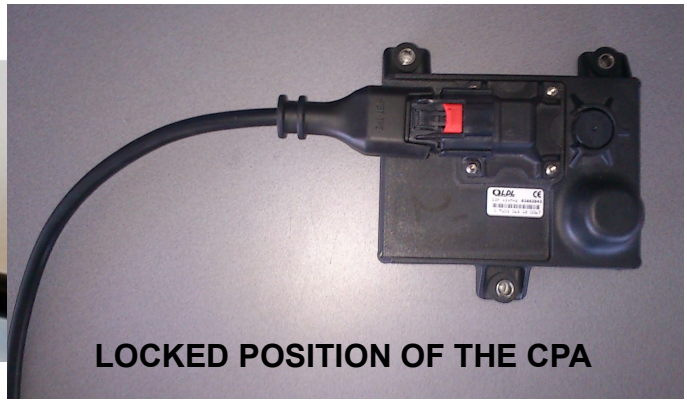

TCU harness Delphi APEX 150 Clip holder, IP69K

7. TCU LOCATING RECOMMENDATIONS

The TCU must be fixed horizontally and upside down (connector side facing the ground):

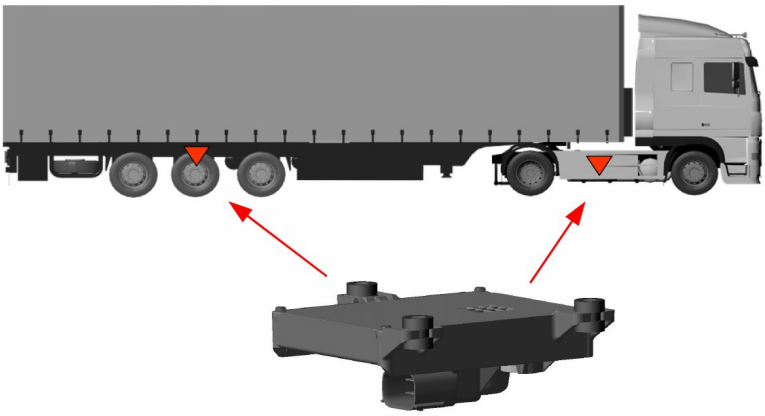

The TCU must be free from any metallic shield in the direction of the connector side.
The antenna should be cleared as possible to optimize RF communication and reduce areas of non-receipt.

There must be a free area of minimum 5cm wide around the TCU in all directions.

TCU must not be exposed to gritting.

Each TCU must be at a central point between the wheels that it has to receive, and aligned on the vehicle axis. ***Distance between TCU and WUS must not exceed 3 meters.***

When trailer is equipped with an EBS, TCU bracket should be fixed to EBS bracket.

Copyrights 2015

CONFIDENTIAL INFORMATION
This document is the exclusive property of LDL Technology.
No content may be transmitted or reproduced in any form without written permission.

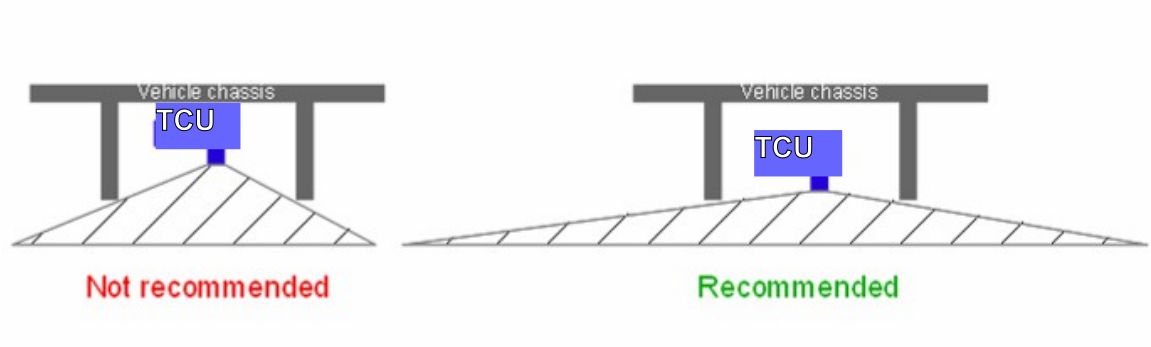

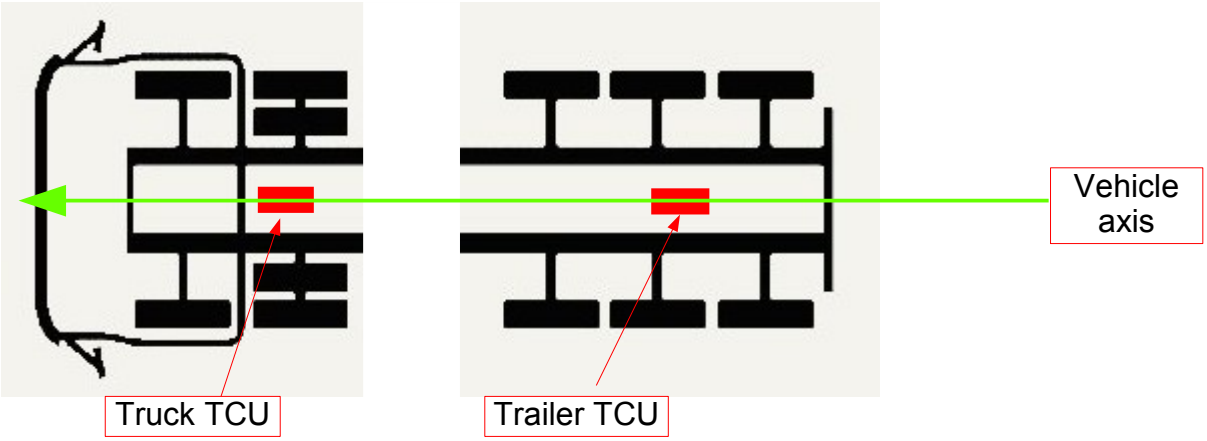

MANDATORY TCU location:

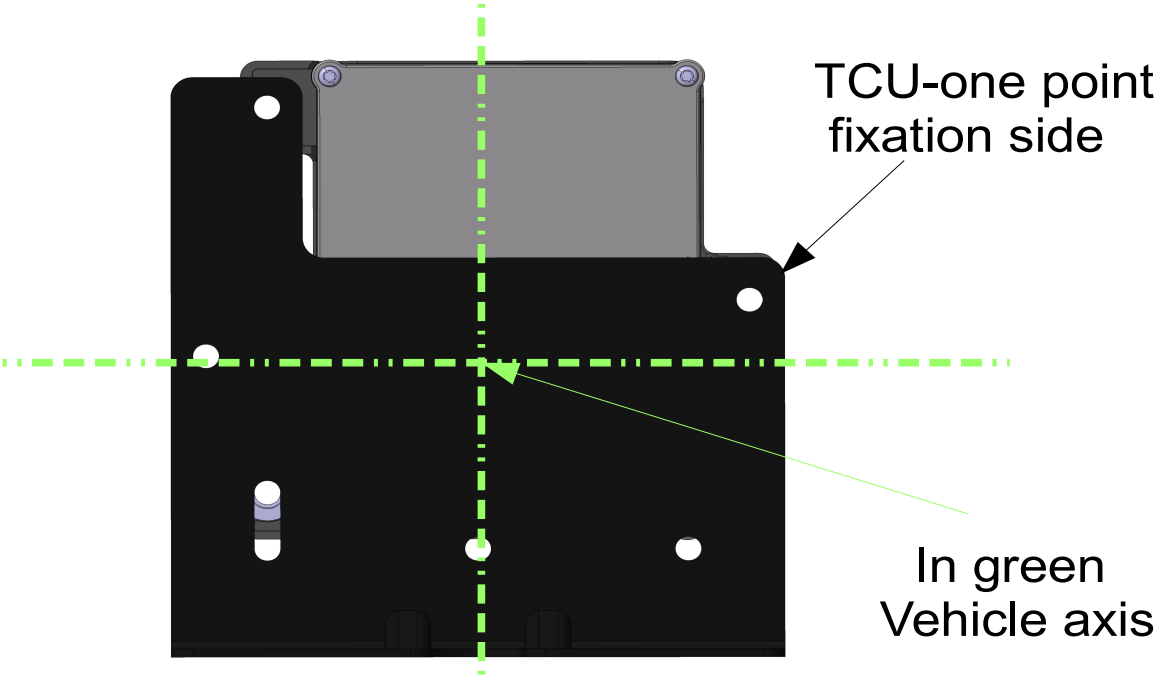

Copyrights 2015

CONFIDENTIAL INFORMATION
This document is the exclusive property of LDL Technology.
No content may be transmitted or reproduced in any form without written permission.

8. FCC/IC Regulatory notices

8.1. Modification statement:

LDL Technology has not approved any changes or modifications to this device by the user. Any changes or modifications could void the user's authority to operate the equipment.

LDL Technology n'approuve aucune modification apportée à l'appareil par l'utilisateur, quelle qu'en soit la nature. Tout changement ou modification peuvent annuler le droit d'utilisation de l'appareil par l'utilisateur.

8.2. Interference statement:

This device complies with Part 15 of the FCC Rules and Industry Canada licence-exempt RSS standard(s). Operation is subject to the following two conditions: (1) this device may not cause interference, and (2) this device must accept any interference, including interference that may cause undesired operation of the device.

Le présent appareil est conforme aux CNR d'Industrie Canada applicables aux appareils radio exempts de licence. L'exploitation est autorisée aux deux conditions suivantes : (1) l'appareil ne doit pas produire de brouillage, et (2) l'utilisateur de l'appareil doit accepter tout brouillage radioélectrique subi, même si le brouillage est susceptible d'en compromettre le fonctionnement.

8.3. Radiation Exposure Statement:

This device complies with FCC/IC radiation exposure limits set forth for an uncontrolled environment and meets the FCC radio frequency (RF) Exposure Guidelines and RSS-102 of the IC radio frequency (RF) Exposure rules. The antenna should be installed and operated with minimum distance of 20 cm between the radiator and your body. This transmitter must not be co-located or operating in conjunction with any other antenna or transmitter.

Le présent appareil est conforme à l'exposition aux radiations FCC / IC définies pour un environnement non contrôlé et répond aux directives d'exposition de la fréquence de la FCC radiofréquence (RF) et RSS-102 de la fréquence radio (RF) IC règles d'exposition. L'antenne doit être installée de façon à garder une distance minimale de 20 centimètres entre la source de rayonnements et votre corps. L'émetteur ne doit pas être colocalisé ni fonctionner conjointement avec une autre antenne ou un autre émetteur.

Copyrights 2015

CONFIDENTIAL INFORMATION
This document is the exclusive property of LDL Technology.
No content may be transmitted or reproduced in any form without written permission.

8.4. FCC CLASS B DIGITAL DEVICE NOTICE

This equipment has been tested and found to comply with the limits for a Class B digital device, pursuant to part 15 of the FCC Rules. These limits are designed to provide reasonable protection against harmful interference in a residential installation. This equipment generates, uses and can radiate radio frequency energy and, if not installed and used in accordance with the instructions, may cause harmful interference to radio communications. However, there is no guarantee that interference will not occur in a particular installation. If this equipment does cause harmful interference to radio or television reception, which can be determined by turning the equipment off and on, the user is encouraged to try to correct the interference by one or more of the following measures:

- Reorient or relocate the receiving antenna.
- Increase the separation between the equipment and receiver.
- Connect the equipment into an outlet on a circuit different from that to which the receiver is connected.
- Consult the dealer or an experienced radio/TV technician for help.

9. APPENDIX

TCU interface dimension, see drawing below

Copyrights 2015

CONFIDENTIAL INFORMATION
This document is the exclusive property of LDL Technology.
No content may be transmitted or reproduced in any form without written permission.

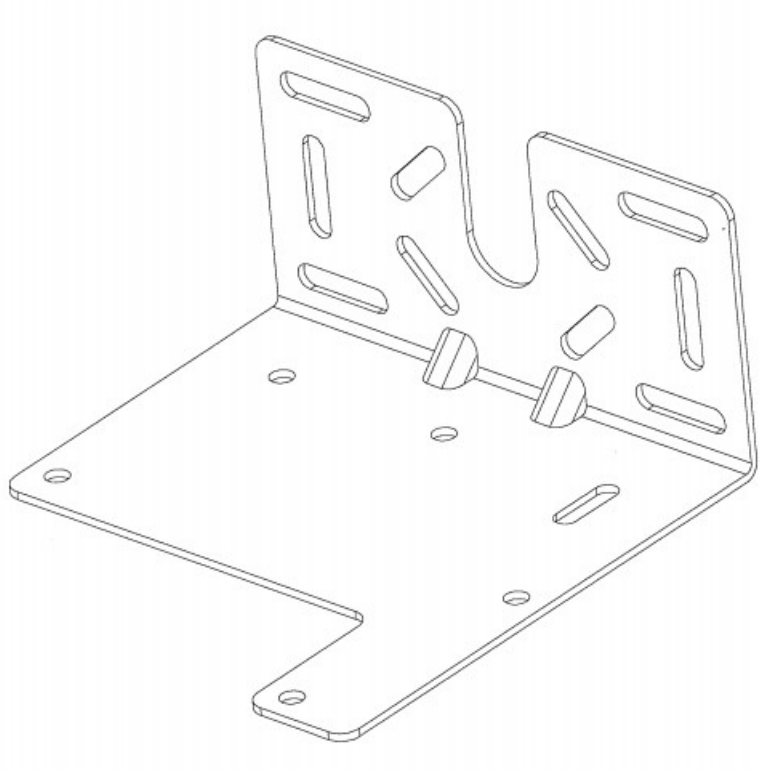

Bracket in steel, thickness 2mm, with surface treatment to withstand at least 1500hr NSS

Copyrights 2015

CONFIDENTIAL INFORMATION
This document is the exclusive property of LDL Technology.
No content may be transmitted or reproduced in any form without written permission.

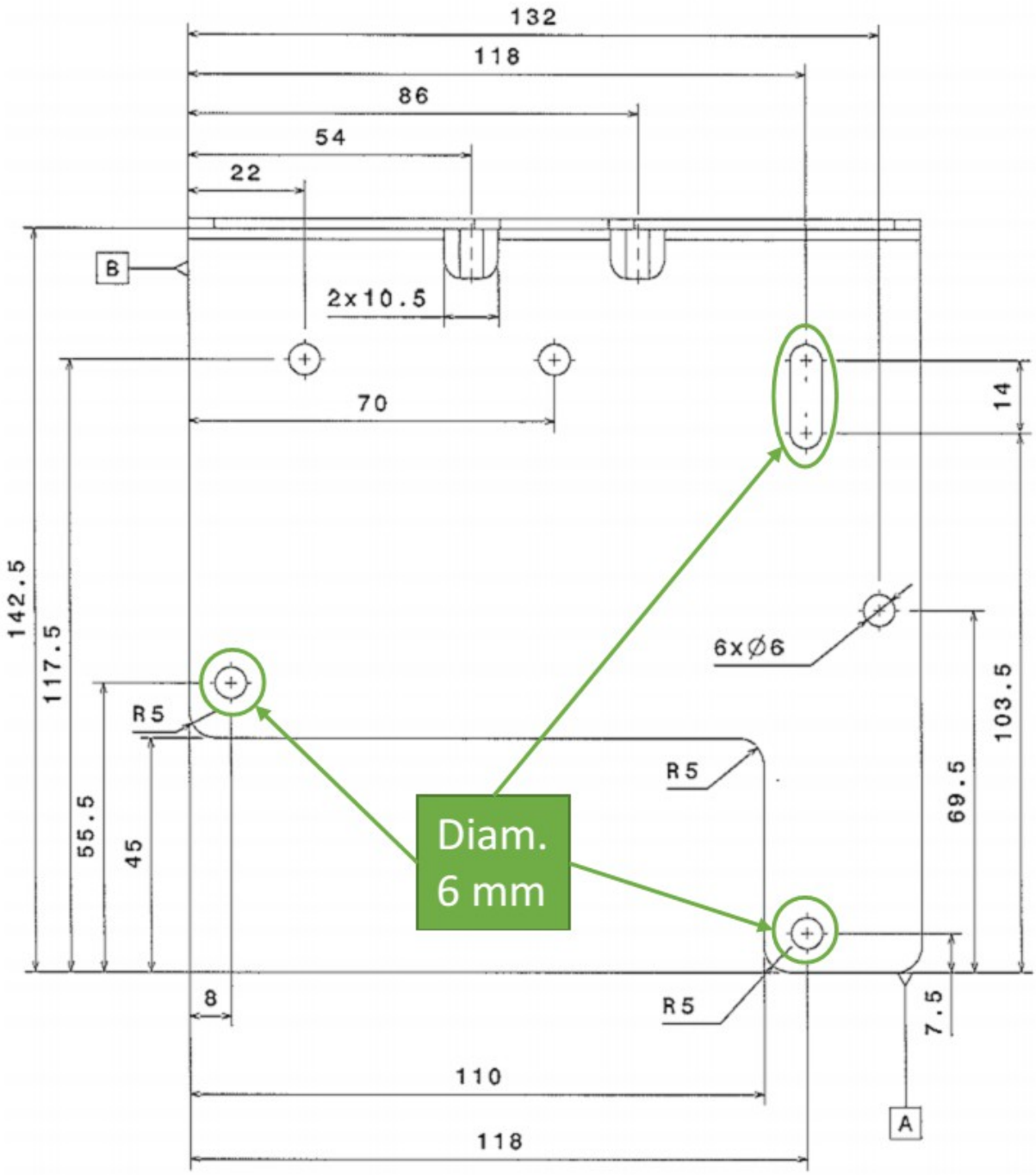

Interface Drawing

Copyrights 2015