AnyTone®

Qixiang Electon Science & Technoloyg Co.,Ltd.

www.anytone.net

A1.190716

AnyTone®

AT-500M

10 METER RADIO

Instruction Manual

1. KNOW ABOUT THIS RADIO

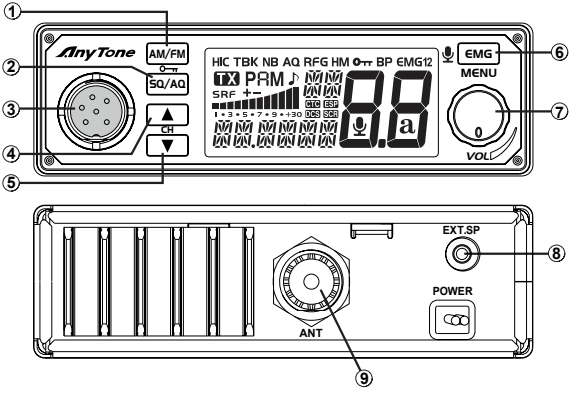

1	Mode/Keypad lock
2	Squelch control, SQ, ASQ switch key
3	Microphone Jack
4	Channel up selector
5	Channel down selector
6	Emergency channel
7	Power On/Off Volume control
8	External speaker Jack
9	Antenna Jack

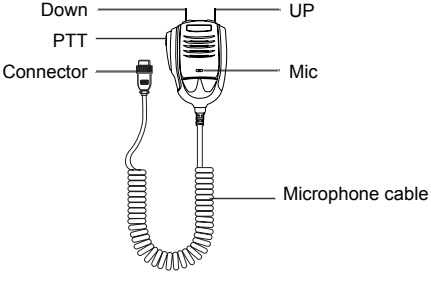

2. LCD

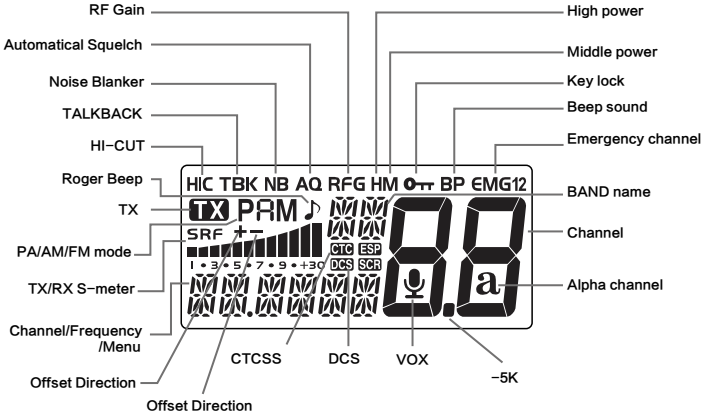

Function and Features

1. AM/FM/PA MODE
2. 7 COLOR DISPLAY
3. VOX FUNCTIONS(TRANSMIT WITHOUT PRESS PTT)
4. SQ, ASQ FUNCTION
5. RF GAIN FUNCTION
6. SCAN FUNCTION
7. RB FUNCTION
8. NB FUNCTION
9. DUAL-WATCH FUNCTION
10. BEEP SOUND
11. TOT FUNCTION
12. HI-CUT FUNCTION
13. EMG CALL
14. SUIT DYMATIC AND ELECTRONIC MICROPHONE
15. BACKLIGHT BRIGHTLESS ADJUSTABLE
16. -5KHZ FUNCTION
17. OFFSET FUNCTION
18. KEY LOCK FUNCTION
19. CTCSS/DCS CODE (OPTIONAL)
20. BUILT IN 12/24V CONVERTOR (OPTIONAL)

3. HOW TO USE THIS RADIO

3.1 Power On/Off the Radio

(1) Turn VOL switch clockwise to power on the radio, the LCD displays the Norms and then displays channel number.

(2) Turn VOL switch anti-clockwise, until hear Ka Ta, the radio is powered off.

Note: *The standard version support 12V DC power supply. optional version support 12+24V check your version before connect power supply.*

3.2 Volume Control

Turn clockwise to increase volume, anti-clockwise to decrease volume.

3.3 Channel Control

(1) Short press [**UP**]/[**DN**] key to change channel by one step.

(2) Hold [**UP**]/[**DN**] can fast changed channel.

3.4 SQ/AQ

※Squelch level Control (short press)

(1) Short press SQ/AQ , until LCD displays "SQL.SET 08", "08" stands for SQ/AQ level, the bigger value stands for high squelch level.

(2) Short press microphone [**UP**] or [**DN**] to change SQ/AQ level.

(3) Long press microphone [**UP**] or [**DN**] can fast change SQ/AQ level.

(4) Short press SQ/AQ or wait for 10 seconds to store and exit.

Note: *The higher SQ level selected, the stronger signal required to open speaker and hear the calling.*

※ASQ Control (long press)

(1) Long press SQ , until LCD displays "**AQ**", the ASQ function turned on.

(2) Short press SQ , until LCD displays "ASQ.SET 06", "06" stands for ASQ level, the bigger value stands for high squelch level.

(3) Short press [**UP**]/[**DN**] to change ASQ level.

(4) Hold [**UP**]/[**DN**] can fast change ASQ level.

(5) Short press SQ or wait for 10 seconds to store and exit.

(6) Long press SQ key again to turn on SQL function.

Note: *The higher ASQ level selected, the stronger signal required to open speaker and hear the calling.*

3.5 AM/FM

※**Mode Control (short press)**

(1) Short press AM/FM , key to switch between AM / FM mode.

(2) The LCD displays the selected mode.

※**Keypad Lock (long press)**

(1) Long press AM/FM key for over 2 seconds to lock the keys, LCD displays 🔑.

(2) Long press AM/FM key for over 2 seconds again to unlock the keys 🔑 disappears form LCD.

Note: *In lock Mode all keys except PTT is valid.*

3.6 EMG

※**Emergency Channel (short press)**

(1) First press EMG , key to choose the first programmed emergency channel, LCD displays **EMG1**.

(2) Second press EMG , key to choose the second programmed emergency channel.

(3) Third press EMG , key to return to last normal channel, LCD displays **EMG2**.

Note: *The default emergency channel are channel 9 and channel 19.*
See menus Emergency Channel Set page 8 for the emergency channel configuration.

※**Functions (long press)**

Long press key to enter in memu and set different function.

3.7 Scan Function

(1) Hold [**UP**]/[**DN**] for over 5 seconds, when you hear /**di di**/, scan started.

(2) Short press [**UP**]/[**DN**] key to change scan direction.

(3) Short press [**AM**]/[**FM**] to change mode, short press EMG or [**PTT**] to exit scan.

3.8 VOX function

The VOX function allows transmitting by speaking into the original microphone without pressing the PTT switch.

Press [**PTT**] + [**EMG**] key to activate VOX function, LCD displays microphone icon, and then press [**PTT**] + [**EMG**] key to disable VOX function. The microphone icon disappeared.

Note: *When turn on VOX, the mic icon flashes, VOX sensitivity and time setting refer to page 6.*

3.9 PA Function

This function allows you to select the mode of operation for public broadcasting.

Turn on PA mode: "**PA**" and modulation mode (AM/FM) flicker alternately.

The volume switch knob is used to adjust the audio level of mode PA.

3.10 Talkback Level

This function allows you to adjust the volume of your walkie-talkie.

(1) Start the intercom function (see "**intercom**" on page 8).

(2) Hold down the PTT switch, then the [up] key increases or the [down] key decreases the Talkback Level

(3) Release PTT switch and save Talkback Level.

3.11 Norms Control

(1) Hold [AM/FM] to power on radio, until LCD displays the norms.

(2) Short press [▲] or [▼] or microphone [UP]/[DN].

(3) Power off and power on again.

3.12 Install External Speaker

Choose a 8Ω external speaker with 3.5 mm mono connector.

3.13 Menu Operations

(1) Long press [EMG] key to enter menu list.

(2) Short press microphone [**UP**] or [**DN**] or [▲] or [▼] to choose menu to be.

(3) Short press [EMG] key to enter function setting parameter of the chosen function, the parameter blinks on LCD.

(4) Short press microphone [**UP**] or [**DN**] or [▲] or [▼] to choose wanted setting.

(5) Short press EMG key to validate the mode and exit setting.

(6) Long press EMG key or wait 10 seconds to store exit MENU.

NO.	LCD display	Function detail	Setting details
1	CDTSET	CTCSS/DCS encode/decode	oF: CTCSS/DCS is OFF; CT: 67.0Hz~250.3Hz; DT: D023N~D754N; **Note:** This function is optional.
2	KEYBP	Beep sound	on: turn on beep sound oF: turn off beep sound Default: on
3	RF.POW	RF power setting	LO: low power nI: middle power HI: high power Default: LO **Note:** This function is valid only when the radio work in HF model or HAM model.
4	SCM	Scan type setting	Sq: squelch scan tI: time scan Default: SQ
5	HI.CUT	HI-CUT setting	oF: turn off HI-CUT function on: turn on HI-CUT function Default: oF
6	MICSET	Microphone gain	1~9, Total 9 levels Default: 6
7	MIC TP	Microphone type	EL: Electronic dy: Dynamic Default: EL Note: Speak into microphone and watch the S-meter to choose wanted mic gain .
8	VOX L	VOX Sensitivity	1~9: total 9 levels Default: 3
9	VOX T	VOX Time	1~9: Total 9 levels Default: 4
10	TAL BAK	Talkback level control	oF, 1~9 Default: oF

NO.	LCD display	Function detail	Setting details
11	ANL/NB	Noise blanker	oF: turn off ANL/NB function on: turn on ANL/NB function Default: oF
12	REPSET	Offset direction	oF: Turn off offset; −: negative offset, TX frequency low than RX frequency; +: minus offset, TX frequency high than RX frequency; Note: Valid only in HF or HAM mode.
13	RF.GAIN	RF gain level control	Level AU 03,06,09~48 Default: oF Note: If the AUTO RFG function is on, the radio will turn on the automatic RFG function.
14	RBSGP	RB sound setting	oF, 1-5 oF: turn off RB sound function. Default: oF
15	COLOR	Backlight color setting	OR: Orange gr: Green bL: Blue Cy: Cyan yE: Yellow PU: Purple CL: White Default: OR
16	BRIGHT	Backlight brighless	Level 1~6 Default: 4
17	TOTSET	Time out timer	oF, 1~10Min Default: 1
18	RX-5K	Frequency -5KHz function	on:turn on -5KHz function oF:turn off -5KHz function Default:oF Note: This function is only valid for radio operating in HAM mode.

3.14 Band Name Setting

(1) Choose a band to be modified.

(2) Long press EMG key to enter menu list.

(3) Short press microphone [**UP**] or [**DN**] or ▲ or ▼ to choose BAND name function memu, LCD displays BNCHNAM.

(4) Short press EMG key, the first digit blinks on LCD.

(5) Short press microphone [**UP**] or [**DN**] or ▲ or ▼ to choose the character of the first digit.

(6) Short press EMG key to validate the first digit. The second digit blinks on LCD.

(7) Short press microphone [**UP**] or [**DN**] or ▲ or ▼ to choose the character of the second digit.

(8) Short press EMG key to validate the second digit and exit setting.

(9) Long press EMG key or wait 10 seconds to store exit MENU.

3.15 Emergency Channel Setting

(1) Long press EMG key to enter menu list.

(2) Short press microphone [**UP**] or [**DN**] or ▲ or ▼ to choose EMG function memu, LCD displays **EMG1--09 on** or **EMG2--19 on**.

(3) Short press EMG key, the character "on" or character "oF" blinks on LCD.

(4) Short press microphone [**UP**] or [**DN**] or ▲ or ▼ to choose the emergency channel is valid.

OFF: stands for turn off current emergency channel.

(5) Short press EMG key, the band name blinks on LCD.

(6) Short press microphone [**UP**] or [**DN**] or ▲ or ▼ to choose the frequency band.

Note: *This frequency band selection is valid only when the radio work in HF model or HAM model.*

(7) Short press [EMG] key to validate the frequency band,and the channel blinks on LCD.

(8) Short press microphone [**UP**] or [**DN**] or [▲] or [▼] to choose the channel.

(9) Short press [EMG] key to validate the channel,and the mode blinks on LCD.

(10) Short press microphone [**UP**] or [**DN**] or [▲] or [▼] to choose the mdoe AM or FM.

(11) Short press [EMG] key to validate the mode and exit setting.

(12) Long press [EMG] key or wait 10 seconds to store exit MENU.

Note: *Choose the frequency band is valid only when the radio work in HF model or HAM model.*

3.16 Resume Factory Default .....

(1) Long press [EMG] key to enter menu list.

(2) Short press microphone [**UP**] or [**DN**] or [▲] or [▼] to choose reset function memu, LCD displays RESET.

(3) Short press [EMG] key to enter menu selection, RESET falshes in the LCD.

(4) Long press [EMG] key key until LCD only displays RESET .

(5) Release [EMG] key, the radio automatically reseted.

4. SPECIFICATION

GENERAL		
Modulation Mode		AM/FM
Frequency Range		28−29.7MHz
Frequency Tolerance		±5.0ppm
Input Voltage		13.8V
Dimensions		185x124x38mm
Weight		620g
Operating Temperature Range		−20℃ to +50℃
Current Drain	Transmit	5A MAX
	Receive	Squelched 0.3A
	VOL Max	0.7A
Antenna Connector		UHF, SO−239
TRANSMITTER		
Power Output		AM 7W, FM15W
Transmission interference		inferior to 4nW
Frequency Response		300−3000Hz
Modulated signal distortion		inferior to 5%
Output Impedance		50 ohms
RECEIVER		
Sensitivity		Less than 1uV for 10dB(S+N)/N
Image Rejection		70dB
Adjacent Channel Rejection		60dB
IF Frequencies		1st 10.695MHz
		2nd 455KHz
Automatic Gain Control(AGC)		Less than 10dB change in audio
		Output for inputs from 10 to 50000uV
Squelch		less than 1uV
Audio Output Power		2Watts at 8Ω less than 10% distortion
Frequency Response		300−3000Hz

WARNING

This device complies with Part 15 of the FCC Rules. Operation is subject to the following two conditions: (1) this device does not cause any harmful interference; and (2) this radio must accept any interference that may cause undesired operations.

Note: This equipment has been tested and found to comply with the limits for a Class B digital device, pursuant to part 15 of the FCC Rules. These limits are designed to provide reasonable protection against harmful interference in a residential installation. This equipment generates, uses and can radiate radio frequency energy and, if not installed and used in accordance with the instructions, may cause harmful interference to radio communications. However, there is no guarantee that interference will not occur in a particular installation. If this equipment does cause harmful interference to radio or television reception, which can be determined by turning the equipment off and on, the user is encouraged to try to correct the interference by one or more of the following measures:

- Reorient or relocate the receiving antenna.
- Increase the separation between the equipment and receiver.
- Connect the equipment into an outlet on a circuit different from that to which the receiver is connected.
- Consult the dealer or an experienced radio/TV technician for help.

Licensing Information

Use our radio in USA is subject to the rules & regulations of FCC. Changes or modifications not expressly approved by our may void the user authority granted by the FCC to operate this radio and should not be made. To comply with FCC requirements, transmitter adjustments should be made only by or under the supervision of a person certified as technically qualified to perform transmitter maintenance and repairs in the private land mobile and fixed services as certified by an organization representative of the user of those services. Replacement of any transmitter component (crystal, semiconductor, etc) not authorized by the FCC equipment authorization for this radio could violate FCC rules.

Note: Use of this radio outside the country where it was intended to be distributed is subject to government regulations and may be prohibited.

Important: Any changes or modifications not expressly approved by the party responsible for compliance could void the user's authority to operate this device. Your radio is set up to transmit a regulated signal on an assigned frequency. It is against the law to alter or adjust the settings inside the radio to exceed those limitations. Any adjustments to your radio must be made by qualified technicians.

WARNING: MODIFICATION OF THIS DEVICE TO RECEIVE CELLULAR RADIOTELEPHONE SERVICE SIGNALS IS PROHIBITED UNDER FCC RULES AND FEDERAL LAW.