netis Wireless USB Adapter

Quick Installation Guide

1.Package Contents

* This QIG is for all netis wireless USB adapters, including models- WF2109, WF2111, WF2116, WF2119, WF2119S, WF2120,WF2122, WF2123,WF2124, WF2503, WF2505, WF2506;WF2561, WF2150, WF2151,WF2180,WF2190, etc.
* The product model shown in this QIG is WF2150, as an example.

2.Hardware Connection

Plug the wireless adapter directly into an available USB interface on your computer. (For WF2116/WF2151/WF2190, you may connect the adapter and your computer with the USB cradle included.)

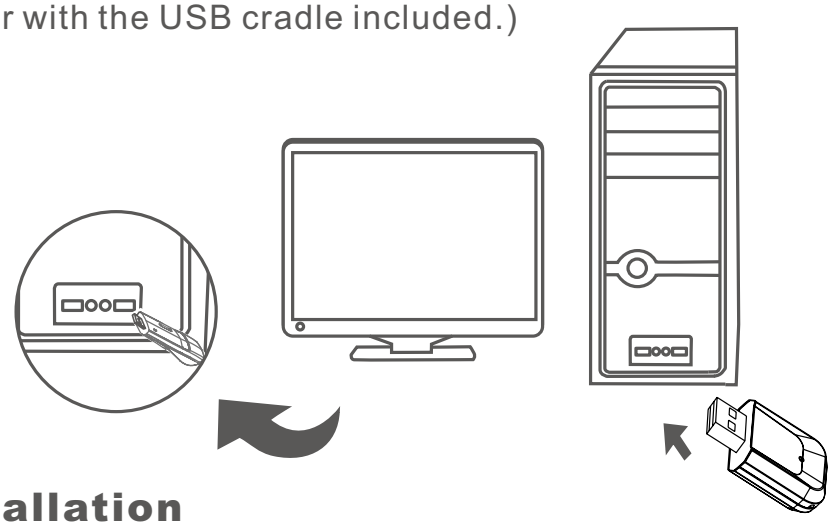

3.Driver Installation

3.1.Insert the netis Driver CD into your CD-ROM drive.

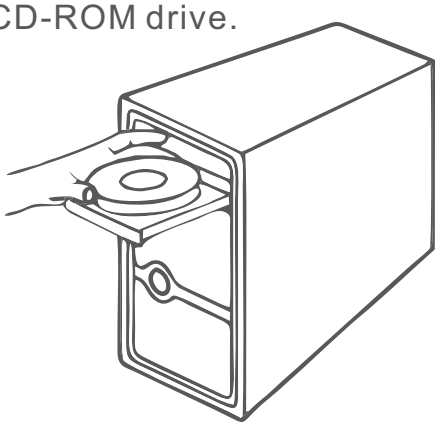

3.2. Install the provided driver from the CD.

For Windows 8/7/Vista/XP
The **Setup Wizard** on the CD will guide you through the driver installation procedures.

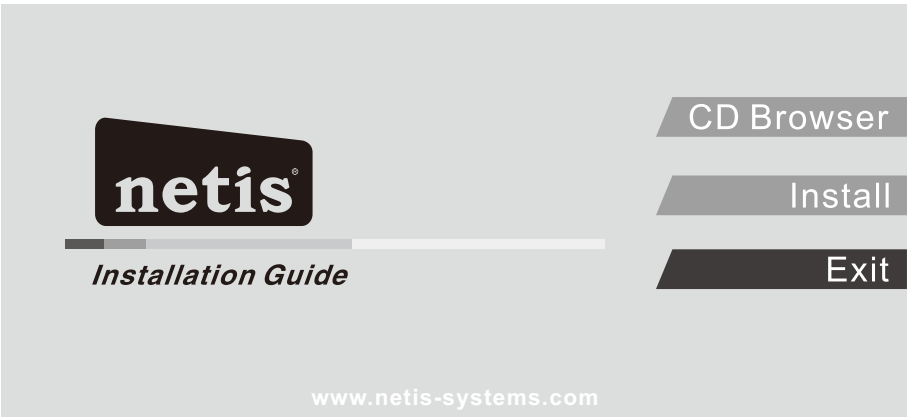

Simply click **"Install"**. The netis smart driver assistant will choose the correct driver program automatically based on your Windows operating system.

The **InstallShield Wizard** window will appear, then please click **"Next"** and follow the step by step procedures to finish the driver installation.

For MAC OS
Open the folder **"Driver"** > **"MAC"** from the CD.
Select the driver package according to your MAC OS version and click the **Installer.pkg** file.
Then an installation dialog will pop up. Please click **"Continue"** and follow the step by step procedures to finish the driver installation.

For Linux
You may get the available driver files from the **"Driver"** > **"Linux"** folder in the CD.
Tip: For further steps, please visit netis website at www.netis-systems.com.

4.Connect to the Wireless Network

For Windows 8/7/Vista/XP
(Here we take Windows 7 for example.)
After driver installation, please click on the wireless network connection icon in the lower right corner of the task bar. Choose the available wireless network, and click on the **"Connect"** button to setup a wireless connection.
If the wireless network is secured, enter the security key/ password in the next popup window.

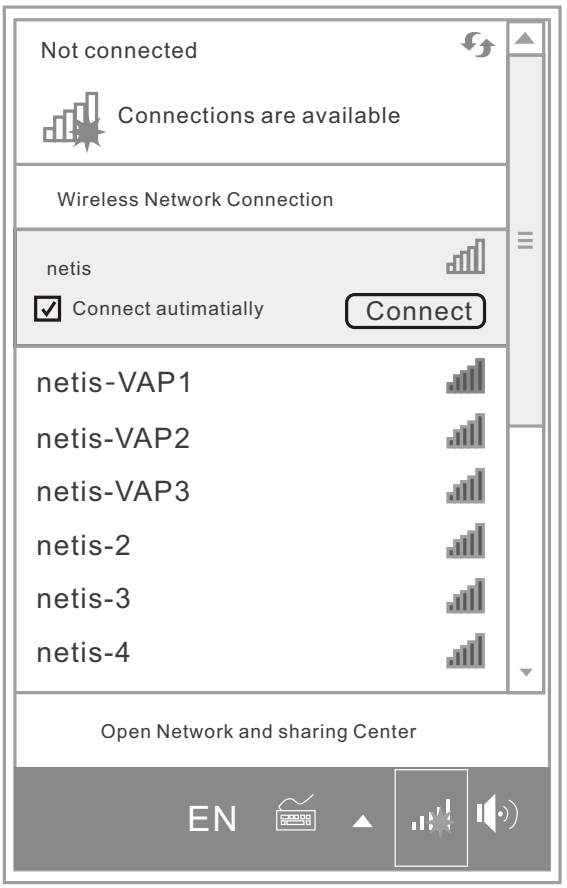

For MAC OS
Click the Wireless Network icon as below.

Choose the available wireless network, and click on the **"Connect"** button to setup a wireless connection.
If the wireless network is secured, enter the network key/ password in the next page.

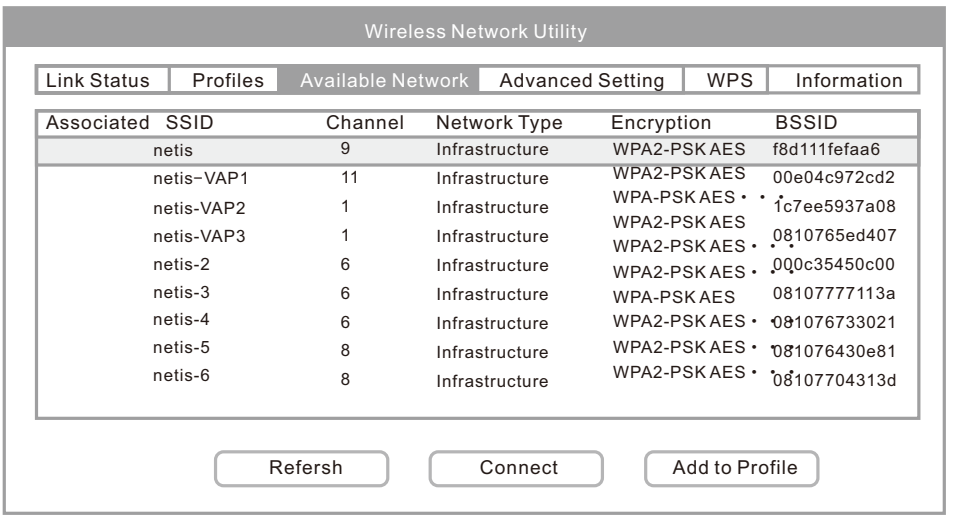

For Linux

(Here we take Ubuntu for example.)

Choose the available wireless network to setup a wireless connection.

If the wireless network is secured, enter the password in the popup window.

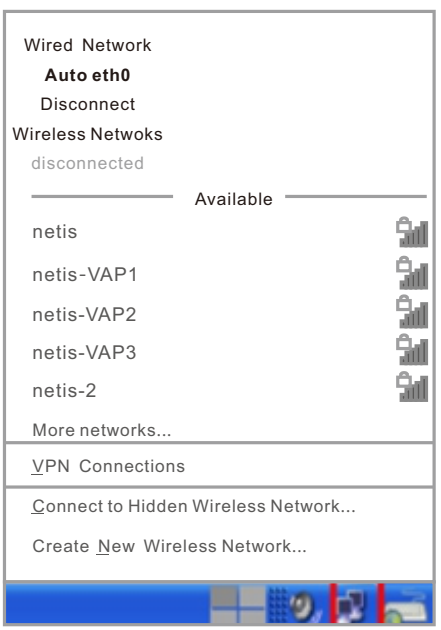

FCC Statement

This equipment has been tested and found to comply with the limits for a Class B digital device, pursuant to part 15 of the FCC Rules. These limits are designed to provide reasonable protection against harmful interference in a residential installation. This equipment generates, uses and can radiate radio frequency energy and, if not installed and used in accordance with the instructions, may cause harmful interference to radio communications. However, there is no guarantee that interference will not occur in a particular installation. If this equipment does cause harmful interference to radio or television reception, which can be determined by turning the equipment off and on, the user is encouraged to try to correct the interference by one or more of the following measures:
—Reorient or relocate the receiving antenna.
—Increase the separation between the equipment and receiver.
—Connect the equipment into an outlet on a circuit different from that to which the receiver is connected.
—Consult the dealer or an experienced radio/TV technician for help.

FCC Radiation Exposure Statement

This device complies with FCC SAR exposure limits set forth for an uncontrolled environment.
This device complies with Part 15 of the FCC Rules. Operation is subject to the following two conditions:
(1) this device may not cause harmful interference, and (2) this device must accept any interference received, including interference that may cause undesired operation.

Caution!

Any changes or modifications not expressly approved by the party responsible for compliance could void the user's authority to operate the equipment.
Operations in the 5150 to 5250MHz band are restricted to indoor use only.

Appendix B: Industry Canada Statement

(For WF2120, WF2116, WF2503)

This Class B digital apparatus complies with Canadian ICES-003.
Cet appareil numérique de la classe B est conforme à la norme NMB-003 du Canada.

This device complies with Industry Canada licence-exempt RSS standard(s). Operation is subject to the following two conditions:
(1) this device may not cause interference, and
(2) this device must accept any interference, including interference that may cause undesired operation of the device.
Le présent appareil est conforme aux CNR d'Industrie Canada applicables aux appareils radio exempts de licence.
L'exploitation est autorisée aux deux conditions suivantes :
(1) l'appareil ne doit pas produire de brouillage, et
(2) l'utilisateur de l'appareil doit accepter tout brouillage radioélectrique subi, même si le brouillage est susceptible d'en compromettre le fonctionnement.

The device meets the exemption from the routine evaluation limits in section 2.5 of RSS 102 and compliance with RSS-102 RF exposure, users can obtain Canadian information on RF exposure and compliance.
Le dispositif rencontre l'exemption des limites courantes d'évaluation dans la section 2.5 de RSS 102 et la conformité à l'exposition de RSS-102 rf, utilisateurs peut obtenir l'information canadienne sur l'exposition et la conformité de rf.

This transmitter must not be co-located or operating in conjunction with any other antenna or transmitter. This equipment should be installed and operated with a minimum distance of 20 centimeters between the radiator and your body.
Cet émetteur ne doit pas être Co-placé ou ne fonctionnant en même temps qu'aucune autre antenne ou émetteur.
Cet équipement devrait être installé et actionné avec une distance minimum de 20 centimètres entre le radiateur et votre corps.

(For WF2116, WF2503)

Under Industry Canada regulations, this radio transmitter IC: 10208A-WF2503R (WF2503), 10208A-WF2116R (WF2116) may only operate using an antenna of a type and maximum (or lesser) gain approved for the transmitter by Industry Canada. To reduce potential radio interference to other users, the antenna type and its gain should be so chosen that the equivalent isotropically radiated power (e.i.r.p.) is not more than that necessary for successful communication. This radio transmitter (identify the device by certification number, or model number if Category II) has been approved by Industry Canada to operate with the antenna types listed below with the maximum permissible gain and required antenna impedance for each antenna type indicated. Antenna types not included in this list, having a gain greater than the maximum gain indicated for that type, are strictly prohibited for use with this device.
A replaceable external antenna was used with antenna gain 5dBi.

Technical Support:
USA/Canada:
Toll Free: +1 866 71 network(+1 866 716 3896)
E-mail: usa_support@netis-systems.com
Other Regions:
E-mail: support@netis-system.com

NETIS SYSTEMS CO., LTD.
www.netis-systems.com
MADE IN CHINA

PKUM06086