SAR TEST REPORT

REPORT NO.: SA990427C06

MODEL NO.: WU202

FCC ID: T5U-WU202

RECEIVED: Apr. 27, 2010

TESTED: Jun. 19 ~ Jun. 23, 2010

ISSUED: Jul. 09, 2010

APPLICANT: Quanta Microsystems, Inc.

ADDRESS: 188 Wenhwa 2nd Rd.,Kueishan Hsiang Taoyuan Shien 333,Taiwan ,R.O.C.

ISSUED BY: Bureau Veritas Consumer Products Services (H.K.) Ltd., Taoyuan Branch

LAB ADDRESS: No. 47, 14th Ling, Chia Pau Tsuen, Lin Kou Hsiang, Taipei Hsien 244, Taiwan, R.O.C.

TEST LOCATION: No. 19, Hwa Ya 2nd Rd, Wen Hwa Tsuen, Kwei Shan Hsiang, Taoyuan Hsien 333, Taiwan, R.O.C.

This test report consists of 49 pages in total except Appendix. It may be duplicated completely for legal use with the approval of the applicant. It should not be reproduced except in full, without the written approval of our laboratory. The client should not use it to claim product certification, approval or endorsement by TAF or any government agency. The test results in the report only apply to the tested sample.

TABLE OF CONTENTS

1. CERTIFICATION 3
2. GENERAL INFORMATION 4
2.1 GENERAL DESCRIPTION OF EUT 4
2.2 GENERAL DESCRIPTION OF APPLIED STANDARDS 5
2.3 GENERAL INOFRMATION OF THE SAR SYSTEM 5
2.4 TEST EQUIPMENT 9
2.5 GENERAL DESCRIPTION OF THE SPATIAL PEAK SAR EVALUATION 10
3. DESCRIPTION OF SUPPORT UNITS 13
4. DESCRIPTION OF ANTENNA LOCATION 14
5. RECIPES FOR TISSUE SIMULATING LIQUIDS 15
6. SYSTEM VALIDATION 21
6.1 TEST PROCEDURE 21
6.2 VALIDATION RESULTS 22
6.3 SYSTEM VALIDATION UNCERTAINTIES 23
7. 802.16e/WIMAX DEVICE AND SYSTEM OPERATING PARAMETERS 24
8. WIMAX/802.16e DEVICE SPECIFICATION 26
8.1 WIMAX ZONE TYPES 26
8.2 POWER MEASUREMENT 27
8.3 DUTY FACTOR 31
8.4 SCALING FACTOR 34
9. TEST SETUP 36
10. TEST RESULTS 37
10.1 TEST PROCEDURES 37
10.2 DESCRIPTION OF TEST CONDITION 38
10.3 REDUCTION OF TEST CHANNEL 39
10.4 MEASURED SAR RESULTS 40
10.5 POWER DRIFT TABLE 42
11. SAR LIMITS 44
12. SAR ERROR CONSIDERATION 45
13. INFORMATION ON THE TESTING LABORATORIES 49

APPENDIX A: TEST CONFIGURATIONS AND TEST DATA

APPENDIX B: ADT SAR MEASUREMENT SYSTEM

APPENDIX C: PHOTOGRAPHS OF SYSTEM VALIDATION

APPENDIX D: SYSTEM CERTIFICATE & CALIBRATION

1. CERTIFICATION

PRODUCT: IEEE802.16e WiMAX USB Dongle
MODEL: WU202
BRAND: QMI
APPLICANT: Quanta Microsystems, Inc.
TESTED: Jun. 19 ~ Jun. 23, 2010
TEST SAMPLE: Engineering Sample
STANDARDS: **FCC Part 2 (Section 2.1093)**
FCC OET Bulletin 65, Supplement C (01-01)
RSS-102

The above equipment (model: WU202) has been tested by **Bureau Veritas Consumer Products Services (H.K.) Ltd., Taoyuan Branch**, and found compliance with the requirement of the above standards. The test record, data evaluation & Equipment Under Test (EUT) configurations represented herein are true and accurate accounts of the measurements of the sample's EMC characteristics under the conditions specified in this report.

PREPARED BY	: Andrea Hsia / Specialist	**, DATE :**	Jul. 09, 2010
TECHNICAL ACCEPTANCE Responsible for RF	: Mason Chang / Engineer	**, DATE :**	Jul. 09, 2010
APPROVED BY	: Gary Chang / Assistant Manager	**, DATE :**	Jul. 09, 2010

2. GENERAL INFORMATION

2.1 GENERAL DESCRIPTION OF EUT

PRODUCT	IEEE802.16e WiMAX USB Dongle	
MODEL NO.	WU202	
FCC ID	T5U-WU202	
POWER SUPPLY	5Vdc	
MODULATION TYPE	**UL**	QPSK1/2, QPSK 3/4, 16QAM1/2, 16QAM 3/4, 64QAM1/2, 64QAM2/4, 64QAM3/4, 64QAM5/6
	DL	QPSK1/2, QPSK 3/4, 16QAM1/2, 16QAM 3/4, 64QAM1/2, 64QAM2/4, 64QAM3/4, 64QAM5/6
MODULATION TECHNOLOGY	OFDMA	
DUPLEX METHOD	TDD	
OPERATING RANGE	2498.5MHz ~ 2687.5MHz	
CHANNEL BANDWIDTH	5.0MHz, 10.0MHz	
AVERAGE SAR (1g)	1.188W/kg	
ANTENNA TYPE	Printed antenna with 3dBi gain	
OPERATION TEMPERATURE RANGE	$0^{o}C$ ~ $45^{o}C$	
DATA CABLE	NA	
I/O PORTS	Refer to user's manual	
ACCESSORY DEVICES	NA	

NOTE:

1. The EUT can supports different UL / DL ratio, max transmit ratio is up to 18 (UL): 29 (DL). After pretesting of output power and spurious emission, 18 (UL): 29 (DL) was found to be worst case and was selected for the final test configuration.
2. The above EUT information was declared by manufacturer and for more detailed features description please refers to the manufacturer's specifications or User's Manual.

2.2 GENERAL DESCRIPTION OF APPLIED STANDARDS

According to the specifications of the manufacturer, this product must comply with the requirements of the following standards:

FCC Part 2 (2.1093)

FCC OET Bulletin 65, Supplement C (01- 01)

RSS-102

IEEE 1528-2003

All test items have been performed and recorded as per the above standards.

2.3 GENERAL INOFRMATION OF THE SAR SYSTEM

DASY4 (software 4.7 Build 80) consists of high precision robot, probe alignment sensor, phantom, robot controller, controlled measurement server and near-field probe. The robot includes six axes that can move to the precision position of the DASY4 software defined. The DASY4 software can define the area that is detected by the probe. The robot is connected to controlled box. Controlled measurement server is connected to the controlled robot box. The DAE includes amplifier, signal multiplexing, AD converter, offset measurement and surface detection. It is connected to the Electro-optical coupler (ECO). The ECO performs the conversion form the optical into digital electric signal of the DAE and transfers data to the PC.

EX3DV4 ISOTROPIC E-FIELD PROBE

CONSTRUCTION	Symmetrical design with triangular core Built-in shielding against static charges PEEK enclosure material (resistant to organic solvents, e.g., DGBE)
FREQUENCY	10 MHz to > 6 GHz Linearity: ± 0.2 dB (30 MHz to 6 GHz)
DIRECTIVITY	± 0.3 dB in HSL (rotation around probe axis) ± 0.5 dB in tissue material (rotation normal to probe axis)
DYNAMIC RANGE	10 μW/g to > 100 mW/g Linearity: ± 0.2 dB (noise: typically < 1 μW/g)
DIMENSIONS	Overall length: 330 mm (Tip: 20 mm) Tip diameter: 2.5 mm (Body: 12 mm) Typical distance from probe tip to dipole centers: 1 mm
APPLICATION	High precision dosimetric measurements in any exposure scenario (e.g., very strong gradient fields). Only probe which enables compliance testing for frequencies up to 6 GHz with precision of better 30%.

NOTE

1. The Probe parameters have been calibrated by the SPEAG. Please reference “APPENDIX D” for the Calibration Certification Report.
2. For frequencies above 800MHz, calibration in a rectangular wave-guide is used, because wave-guide size is manageable.
3. For frequencies below 800MHz, temperature transfer calibration is used because the wave-guide size becomes relatively large.

TWIN SAM V4.0

CONSTRUCTION	The shell corresponds to the specifications of the Specific Anthropomorphic Mannequin (SAM) phantom defined in IEEE 1528-2003, EN 62209-1 and IEC 62209. It enables the dosimetric evaluation of left and right hand phone usage as well as body mounted usage at the flat phantom region. A cover prevents evaporation of the liquid. Reference markings on the phantom allow the complete setup of all predefined phantom positions and measurement grids by manually teaching three points with the robot.
SHELL THICKNESS	2 ± 0.2mm
FILLING VOLUME	Approx. 25liters
DIMENSIONS	Height: 810mm; Length: 1000mm; Width: 500mm

SYSTEM VALIDATION KITS:

CONSTRUCTION	Symmetrical dipole with l/4 balun enables measurement of feedpoint impedance with NWA matched for use near flat phantoms filled with brain simulating solutions. Includes distance holder and tripod adaptor
CALIBRATION	Calibrated SAR value for specified position and input power at the flat phantom in brain simulating solutions
FREQUENCY	2450MHz
RETURN LOSS	> 20dB at specified validation position
POWER CAPABILITY	> 100W (f < 1GHz); > 40W (f > 1GHz)
OPTIONS	Dipoles for other frequencies or solutions and other calibration conditions upon request

DEVICE HOLDER FOR SAM TWIN PHANTOM

CONSTRUCTION	The device holder for the mobile phone device is designed to cope with different positions given in the standard. It has two scales for the device rotation (with respect to the body axis) and the device inclination (with respect to the line between the ear reference points). The rotation centers for both scales is the ear reference point (ERP). Thus the device needs no repositioning when changing the angles. The holder has been made out of low-loss POM material having the following dielectric parameters: relative permittivity ε =3 and loss tangent δ =0.02. The amount of dielectric material has been reduced in the closest vicinity of the device, since measurements have suggested that the influence of the clamp on the test results could thus be lowered. The device holder for the portable device makes up of the polyethylene foam. The dielectric parameters of material close to the dielectric parameters of the air.

DATA ACQUISITION ELECTRONICS

CONSTRUCTION

The data acquisition electronics (DAE3) consists of a highly sensitive electrometer grade preamplifier with auto-zeroing, a channel and gain-switching multiplex, a fast 16 bit AD converter and a command decoder and control logic unit. Transmission to the measurement server is accomplished through an optical downlink for data and status information as well as an optical uplink for commands and the clock. The mechanical probe is mounting device includes two different sensor systems for frontal and sideways probe contacts. They are used for mechanical surface detection and probe collision detection. The input impedance of the DAE3 box is 200MOhm; the inputs are symmetrical and floating. Common mode rejection is above 80 dB.

2.4 TEST EQUIPMENT

FOR SAR MEASURENENT

ITEM	NAME	BRAND	TYPE	SERIES NO.	DATE OF CALIBRATION	DUE DATE OF CALIBRATION
1	SAM Phantom	S & P	QD000 P40 CA	TP-1202	NA	NA
2	Signal Generator	Agilent	E8257C	MY43320668	Feb. 23, 2010	Feb. 22, 2011
3	E-Field Probe	S & P	EX3DV4	3590	Mar. 25, 2010	Mar. 24, 2011
4	DAE	S & P	DAE 4	861	Jan. 22, 2010	Jan. 21, 2011
5	Robot Positioner	Staubli Unimation	NA	NA	NA	NA
6	Validation Dipole	S & P	D2450V2	737	Feb. 19, 2010	Feb. 18, 2011
7			D2600V2	1020	Jan. 27, 2010	Jan. 26, 2011

NOTE: Before starting the measurement, all test equipment shall be warmed up for 30min.

FOR TISSUE PROPERTY

ITEM	NAME	BRAND	TYPE	SERIES NO.	DATE OF CALIBRATION	DUE DATE OF CALIBRATION
1	Network Analyzer	Agilent	E8358A	US41480538	Dec. 03, 2009	Dec. 02, 2010
2	Dielectric Probe	Agilent	85070D	US01440176	NA	NA

NOTE:

1. Before starting, all test equipment shall be warmed up for 30min.
2. The tolerance (k=1) specified by Agilent for general dielectric measurements, deriving from inaccuracies in the calibration data, analyzer drift, and random errors, are usually ±2.5% and ±5% for measured permittivity and conductivity, respectively. However, the tolerances for the conductivity is smaller for material with large loss tangents, i.e., less than ±2.5% (k=1). It can be substantially smaller if more accurate methods are applied.

2.5 GENERAL DESCRIPTION OF THE SPATIAL PEAK SAR EVALUATION

The DASY4 post-processing software (SEMCAD) automatically executes the following procedures to calculate the field units from the micro-volt readings at the probe connector. The parameters used in the evaluation are stored in the configuration modules of the software:

Probe parameters:	- Sensitivity	$Norm_i$, a_{i0}, a_{i1}, a_{i2}
	- Conversion factor	$ConvF_i$
	- Diode compression point	dcp_i
Device parameters:	- Frequency	F
	- Crest factor	Cf
Media parameters:	- Conductivity	σ
	- Density	ρ

The first step of the evaluation is a linearization of the filtered input signal to account for the compression characteristics of the detector diode. The compensation depends on the input signal, the diode type and the DC-transmission factor from the diode to the evaluation electronics. If the exciting field is pulsed, the crest factor of the signal must be known to correctly compensate for peak power. The formula for each channel can be given as:

$$V_i = U_i + U_i^2 \bullet \frac{cf}{dcp_i}$$

V_i	=compensated signal of channel i	(i = x, y, z)
U_i	=input signal of channel I	(i = x, y, z)
Cf	=crest factor of exciting field	(DASY parameter)
dcp_i	=diode compression point	(DASY parameter)

From the compensated input signals the primary field data for each channel can be evaluated:

$$\text{E-fieldprobes: } E_i = \sqrt{\frac{V_1}{Norm_i \cdot ConvF}}$$

$$\text{H-fieldprobes: } H_i = \sqrt{V_i} \cdot \frac{a_{i0} + a_{i1} f + a_{i2} f^2}{f}$$

V_i	=compensated signal of channel I	(i = x, y, z)
$Norm_i$	=sensor sensitivity of channel i μV/(V/m)2 for E-field Probes	(i = x, y, z)
ConvF	= sensitivity enhancement in solution	
a_{ij}	= sensor sensitivity factors for H-field probes	
F	= carrier frequency [GHz]	
E_i	= electric field strength of channel i in V/m	
H_i	= magnetic field strength of channel i in A/m	

The RSS value of the field components gives the total field strength (Hermitian magnitude):

$$E_{tot} = \sqrt{E_x^2 + E_y^2 + E_z^2}$$

The primary field data are used to calculate the derived field units.

$$SAR = E_{tot}^2 \cdot \frac{\sigma}{\rho \cdot 1'000}$$

SAR	= local specific absorption rate in mW/g
E_{tot}	= total field strength in V/m
σ	= conductivity in [mho/m] or [Siemens/m]
ρ	= equivalent tissue density in g/cm3

Note that the density is set to 1, to account for actual head tissue density rather than the density of the tissue simulating liquid. The entire evaluation of the spatial peak values is performed within the Post-processing engine (SEMCAD). The system always gives the maximum values for the 1g and 10g cubes. The algorithm to find the cube with highest averaged SAR is divided into the following stages:

1. The extraction of the measured data (grid and values) from the Zoom Scan
2. The calculation of the SAR value at every measurement point based on all stored data (A/D values and measurement parameters)
3. The generation of a high-resolution mesh within the measured volume
4. The interpolation of all measured values from the measurement grid to the high-resolution grid
5. The extrapolation of the entire 3-D field distribution to the phantom surface over the distance from sensor to surface
6. The calculation of the averaged SAR within masses of 1g and 10g.

The probe is calibrated at the center of the dipole sensors that is located 1 to 2.7mm away from the probe tip. During measurements, the probe stops shortly above the phantom surface, depending on the probe and the surface detecting system. Both distances are included as parameters in the probe configuration file. The software always knows exactly how far away the measured point is from the surface. As the probe cannot directly measure at the surface, the values between the deepest measured point and the surface must be extrapolated. The angle between the probe axis and the surface normal line is less than 30 degree.

The maximum search is automatically performed after each area scan measurement. It is based on splines in two or three dimensions. The procedure can find the maximum for most SAR distributions even with relatively large grid spacing. After the area scanning measurement, the probe is automatically moved to a position at the interpolated maximum. The following scan can directly use this position for reference, e.g., for a finer resolution grid or the cube evaluations. The 1g and 10g peak evaluations are only available for the predefined cube 7 x 7 x 7 scans. The routines are verified and optimized for the grid dimensions used in these cube measurements. The measured volume of 30 x 30 x 30mm contains about 30g of tissue. The first procedure is an extrapolation (incl. boundary correction) to get the points between the lowest measured plane and the surface. The next step uses 3D interpolation to get all points within the measured volume in a 1mm grid (42875 points). In the last step, a 1g cube is placed numerically into the volume and its averaged SAR is calculated. This cube is the moved around until the highest averaged SAR is found. If the highest SAR is found at the edge of the measured volume, the system will issue a warning: higher SAR values might be found outside of the measured volume. In that case the cube measurement can be repeated, using the new interpolated maximum as the center.

3. DESCRIPTION OF SUPPORT UNITS

The EUT has been tested as an independent unit together with other necessary accessories or support units. The following support units or accessories were used to form a representative test configuration during the tests.

NO.	PRODUCT	BRAND	MODEL NO.	SERIAL NO.	FCC ID
1	NOTEBOOK	DELL	D630	29144041120	CXSMM01BRD02D330

NO.	SIGNAL CABLE DESCRIPTION OF THE ABOVE SUPPORT UNITS
1	NA

NOTE: All power cords of the above support units are non shielded (1.8m).

4. DESCRIPTION OF ANTENNA LOCATION

The EUT has 2 built-in antennas, one for transmitting and 2 for receiving.

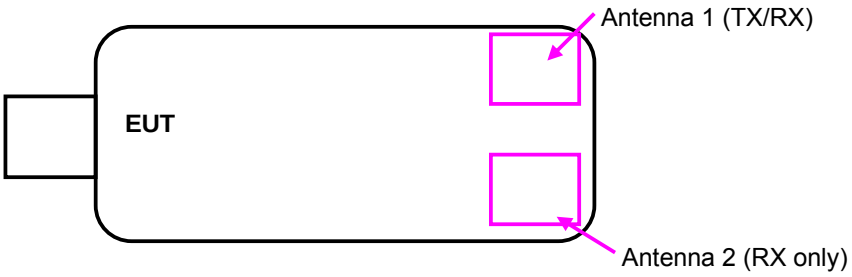

5. RECIPES FOR TISSUE SIMULATING LIQUIDS

For the measurement of the field distribution inside the SAM phantom, the phantom must be filled with 25 litters of tissue simulation liquid.

The following ingredients are used：

- **WATER-** Deionized water (pure H20), resistivity _16 M - as basis for the liquid
- **DGMBE-** Diethylenglycol-monobuthyl ether (DGMBE), Fluka Chemie GmbH, CAS # 112-34-5 - to reduce relative permittivity

THE RECIPES FOR 2450MHz SIMULATING LIQUID TABLE

INGREDIENT	MUSCLE SIMULATING LIQUID 2450MHz (MSL-2450)
Water	69.83%
DGMBE	30.17%
Dielectric Parameters at 22 ℃	f= 2450MHz ε= 52.7 ± 5% σ= 1.95 ± 5% S/m

THE RECIPES FOR 2600MHz SIMULATING LIQUID TABLE

Ingredient	Muscle Simulating Liquid 2600MHz (MSL-2600)
Water	69.83%
DGMBE	30.17%
Salt	NA
Dielectric Parameters at 22℃	f= 2600MHz ε= 52.5 ± 5% σ= 2.16 ± 5% S/m

Testing the liquids using the Agilent Network Analyzer E8358A and Agilent Dielectric Probe Kit 85070D.The testing procedure is following as

1. Turn Network Analyzer on and allow at least 30min. warm up.
2. Mount dielectric probe kit so that interconnecting cable to Network Analyzer will not be moved during measurements or calibration.
3. Pour de-ionized water and measure water temperature (±1°).
4. Set water temperature in Agilent-Software (Calibration Setup).
5. Perform calibration.
6. Validate calibration with dielectric material of known properties (e.g. polished ceramic slab with >8mm thickness ε'=10.0, ε''=0.0). If measured parameters do not fit within tolerance, repeat calibration (±0.2 for ε': ±0.1 for ε'').
7. Conductivity can be calculated from ε'' by $\sigma = \omega\ \varepsilon_0\ \varepsilon'' = \varepsilon''\ f\ [GHz] / 18$.
8. Measure liquid shortly after calibration. Repeat calibration every hour.
9. Stir the liquid to be measured. Take a sample (~ 50ml) with a syringe from the center of the liquid container.
10. Pour the liquid into a small glass flask. Hold the syringe at the bottom of the flask to avoid air bubbles.
11. Put the dielectric probe in the glass flask. Check that there are no air bubbles in front of the opening in the dielectric probe kit.
12. Perform measurements.
13. Adjust medium parameters in DASY4 for the frequencies necessary for the measurements (‘Setup Config’, select medium (e.g. Brain 900MHz) and press ‘Option’-button.
14. Select the current medium for the frequency of the validation (e.g. Setup Medium Brain 900MHz).

FOR SIMULATING LIQUID

LIQUID TYPE		MSL-2450			
SIMULATING LIQUID TEMP.		22.6			
TEST DATE		Jun. 19, 2010			
TESTED BY		Aaron Liang			
FREQ. (MHz)	LIQUID PARAMETER	STANDARD VALUE	MEASUREMENT VALUE	ERROR PERCENTAGE (%)	LIMIT(%)
2450.0	Permitivity (ε)	52.70	53.70	1.90	±5
2498.5		52.60	53.50	1.71	
2450.0	Conductivity (σ) S/m	1.95	1.90	-2.56	
2498.5		2.02	1.97	-2.48	

LIQUID TYPE		MSL-2600			
SIMULATING LIQUID TEMP.		22.6			
TEST DATE		Jun. 19, 2010			
TESTED BY		Aaron Liang			
FREQ. (MHz)	LIQUID PARAMETER	STANDARD VALUE	MEASUREMENT VALUE	ERROR PERCENTAGE (%)	LIMIT(%)
2501.0	Permitivity (ε)	52.60	52.80	0.38	±5
2593.0		52.50	52.60	0.19	
2600.0		52.50	52.40	-0.19	
2685.0		52.40	52.10	-0.57	
2687.5		52.40	52.00	-0.76	
2501.0	Conductivity (σ) S/m	2.02	2.05	1.49	
2593.0		2.15	2.13	-0.93	
2600.0		2.16	2.16	0.00	
2685.0		2.28	2.24	-1.75	
2687.5		2.29	2.26	-1.31	

LIQUID TYPE		MSL-2450			
SIMULATING LIQUID TEMP.		22.6			
TEST DATE		Jun. 20, 2010			
TESTED BY		Aaron Liang			
FREQ. (MHz)	LIQUID PARAMETER	STANDARD VALUE	MEASUREMENT VALUE	ERROR PERCENTAGE (%)	LIMIT(%)
2450.0	Permitivity (ε)	52.70	53.80	2.09	±5
2498.5		52.60	53.60	1.90	
2450.0	Conductivity (σ) S/m	1.95	1.89	-3.08	
2498.5		2.02	1.96	-2.97	

LIQUID TYPE		MSL-2600			
SIMULATING LIQUID TEMP.		22.6			
TEST DATE		Jun. 20, 2010			
TESTED BY		Aaron Liang			
FREQ. (MHz)	LIQUID PARAMETER	STANDARD VALUE	MEASUREMENT VALUE	ERROR PERCENTAGE (%)	LIMIT(%)
2501.0	Permitivity (ε)	52.60	52.90	0.57	±5
2593.0		52.50	52.70	0.38	
2600.0		52.50	52.50	0.00	
2685.0		52.40	52.20	-0.38	
2687.5		52.40	52.10	-0.57	
2501.0	Conductivity (σ) S/m	2.02	2.05	1.49	
2593.0		2.15	2.14	-0.47	
2600.0		2.16	2.17	0.46	
2685.0		2.28	2.25	-1.32	
2687.5		2.29	2.27	-0.87	

LIQUID TYPE		MSL-2600			
SIMULATING LIQUID TEMP.		22.6			
TEST DATE		Jun. 21, 2010			
TESTED BY		Aaron Liang			
FREQ. (MHz)	LIQUID PARAMETER	STANDARD VALUE	MEASUREMENT VALUE	ERROR PERCENTAGE (%)	LIMIT(%)
2600.0	Permitivity (ε)	52.50	52.30	-0.38	±5
2685.0		52.40	52.10	-0.57	
2687.5		52.40	52.00	-0.76	
2600.0	Conductivity (σ) S/m	2.16	2.15	-0.46	
2685.0		2.28	2.23	-2.19	
2687.5		2.29	2.27	-0.87	

LIQUID TYPE		MSL-2600			
SIMULATING LIQUID TEMP.		22.6			
TEST DATE		Jun. 22, 2010			
TESTED BY		Aaron Liang			
FREQ. (MHz)	LIQUID PARAMETER	STANDARD VALUE	MEASUREMENT VALUE	ERROR PERCENTAGE (%)	LIMIT(%)
2600.0	Permitivity (ε)	52.50	52.10	-0.76	±5
2685.0		52.40	52.00	-0.76	
2687.5		52.40	51.90	-0.95	
2600.0	Conductivity (σ) S/m	2.16	2.17	0.46	
2685.0		2.28	2.25	-1.32	
2687.5		2.29	2.26	-1.31	

LIQUID TYPE		MSL-2600			
SIMULATING LIQUID TEMP.		22.6			
TEST DATE		Jun. 23, 2010			
TESTED BY		Aaron Liang			
FREQ. (MHz)	**LIQUID PARAMETER**	**STANDARD VALUE**	**MEASUREMENT VALUE**	**ERROR PERCENTAGE (%)**	**LIMIT(%)**
2600.0	Permitivity (ε)	52.50	52.20	-0.57	±5
2685.0		52.40	52.10	-0.57	
2687.5		52.40	52.00	-0.76	
2600.0	Conductivity (σ) S/m	2.16	2.16	0.00	
2685.0		2.28	2.24	-1.75	
2687.5		2.29	2.26	-1.31	

6. SYSTEM VALIDATION

The system validation was performed in the flat phantom with equipment listed in the following table. Since the SAR value is calculated from the measured electric field, dielectric constant and conductivity of the body tissue and the SAR is proportional to the square of the electric field. So, the SAR value will be also proportional to the RF power input to the system validation dipole under the same test environment. In our system validation test, 250mW RF input power was used.

6.1 TEST PROCEDURE

Before the system performance check, we need only to tell the system which components (probe, medium, and device) are used for the system performance check; the system will take care of all parameters. The dipole must be placed beneath the flat section of the SAM Twin Phantom with the correct distance holder in place. The distance holder should touch the phantom surface with a light pressure at the reference marking (little cross) and be oriented parallel to the long side of the phantom. Accurate positioning is not necessary, since the system will search for the peak SAR location, except that the dipole arms should be parallel to the surface. The device holder for mobile phones can be left in place but should be rotated away from the dipole.

1. The ”Power Reference Measurement” and ”Power Drift Measurement” jobs are located at the beginning and end of the batch process. They measure the field drift at one single point in the liquid over the complete procedure. The indicated drift is mainly the variation of the amplifier output power. If it is too high (above ±0.1 dB), the system performance check should be repeated; some amplifiers have very high drift during warm-up. A stable amplifier gives drift results in the DASY system below ±0.02dB.

2. The ”Surface Check” job tests the optical surface detection system of the DASY system by repeatedly detecting the surface with the optical and mechanical surface detector and comparing the results. The output gives the detecting heights of both systems, the difference between the two systems and the standard deviation of the detection repeatability. Air bubbles or refraction in the liquid due to separation of the sugar-water mixture gives poor repeatability (above ±0.1mm). In that case it is better to abort the system performance check and stir the liquid.

3. The ”Area Scan” job measures the SAR above the dipole on a plane parallel to the surface. It is used to locate the approximate location of the peak SAR. The proposed scan uses large grid spacing for faster measurement; due to the symmetric field, the peak detection is reliable. If a finer graphic is desired, the grid spacing can be reduced. Grid spacing and orientation have no influence on the SAR result.

4. The ”Zoom Scan” job measures the field in a volume around the peak SAR value assessed in the previous ”Area Scan” job (for more information see the application note on SAR evaluation).

About the validation dipole positioning uncertainty, the constant and low loss dielectric spacer is used to establish the correct distance between the top surface of the dipole and the bottom surface of the phantom, the error component introduced by the uncertainty of the distance between the liquid (i.e., phantom shell) and the validation dipole in the DASY4 system is less than ±0.1mm.

$$SAR_{tolerance}[\%] = 100 \times (\frac{(a+d)^2}{a^2} - 1)$$

As the closest distance is 10mm, the resulting tolerance $SAR_{tolerance}$[%] is <2%.

6.2 VALIDATION RESULTS

SYSTEM VALIDATION TEST OF SIMULATING LIQUID					
FREQUENCY (MHz)	REQUIRED SAR (mW/g)	MEASURED SAR (mW/g)	DEVIATION (%)	SEPARATION DISTANCE	TESTED DATE
MSL2450	13.1 (1g)	13.5	3.05	10mm	Jun. 19, 2010
MSL2600	13.9 (1g)	14.2	2.16	10mm	Jun. 19, 2010
MSL2450	13.1 (1g)	13.4	2.29	10mm	Jun. 20, 2010
MSL2600	13.9 (1g)	14.1	1.44	10mm	Jun. 20, 2010
MSL2600	13.9 (1g)	14.0	0.72	10mm	Jun. 21, 2010
MSL2600	13.9 (1g)	14.4	3.60	10mm	Jun. 22, 2010
MSL2600	13.9 (1g)	14.2	2.16	10mm	Jun. 23, 2010

NOTE: Please see Appendix for the photo of system validation test.

6.3 SYSTEM VALIDATION UNCERTAINTIES

In the table below, the system validation uncertainty with respect to the analytically assessed SAR value of a dipole source as given in the IEEE 1528 standard is given. This uncertainty is smaller than the expected uncertainty for mobile phone measurements due to the simplified setup and the symmetric field distribution.

Error Description	Tolerance (±%)	Probability Distribution	Divisor	(C_i)		Standard Uncertainty (±%)		(v_i)
				(1g)	(10g)	(1g)	(10g)	
Measurement System								
Probe Calibration	5.50	Normal	1	1	1	5.50	5.50	∞
Axial Isotropy	0.25	Rectangular	√3	0.7	0.7	0.10	0.10	∞
Hemispherical Isotropy	1.30	Rectangular	√3	0.7	0.7	0.53	0.53	∞
Boundary effects	1.00	Rectangular	√3	1	1	0.58	0.58	∞
Linearity	0.30	Rectangular	√3	1	1	0.17	0.17	∞
System Detection Limits	1.00	Rectangular	√3	1	1	0.58	0.58	∞
Readout Electronics	0.30	Normal	1	1	1	0.30	0.30	∞
Response Time	0.80	Rectangular	√3	1	1	0.46	0.46	∞
Integration Time	2.60	Rectangular	√3	1	1	1.50	1.50	∞
RF Ambient Noise	3.00	Rectangular	√3	1	1	1.73	1.73	9
RF Ambient Reflections	3.00	Rectangular	√3	1	1	1.73	1.73	9
Probe Positioner	0.40	Rectangular	√3	1	1	0.23	0.23	∞
Probe Positioning	2.90	Rectangular	√3	1	1	1.67	1.67	∞
Max. SAR Eval.	1.00	Rectangular	√3	1	1	0.58	0.58	∞
Test sample related								
Sample positioning	1.90	Normal	1	1	1	1.90	1.90	4
Device holder uncertainty	2.80	Normal	1	1	1	2.80	2.80	4
Output power variation-SAR drift	3.84	Rectangular	√3	1	1	2.22	2.22	1
Dipole Related								
Dipole Axis to Liquid Distance	1.60	Rectangular	√3	1	1	0.92	0.92	4
Input Power Drift	1.32	Rectangular	√3	1	1	0.76	0.76	1
Phantom and Tissue parameters								
Phantom Uncertainty	4.00	Rectangular	√3	1	1	2.31	2.31	∞
Liquid Conductivity (target)	5.00	Rectangular	√3	0.64	0.43	1.85	1.24	∞
Liquid Conductivity (measurement)	3.08	Normal	1	0.64	0.43	1.97	1.32	9
Liquid Permittivity (target)	5.00	Rectangular	√3	0.6	0.49	1.73	1.41	∞
Liquid Permittivity (measurement)	2.09	Normal	1	0.6	0.49	1.25	1.02	9
Combined Standard Uncertainty						**8.83**	**8.51**	
Coverage Factor for 95%						**Kp=2**		
Expanded Uncertainty (K=2)						**17.66**	**17.02**	

NOTE: About the system validation uncertainty assessment, please reference the section 7.

7. 802.16e/WiMax DEVICE AND SYSTEM OPERATING PARAMETERS

DESCRIPTION	PARAMETER		COMMENT
FCC ID	T5U-WU202		Identify all related FCC ID
Radio Service	Part 27 subpart M		Rule parts
Transmit Frequency Range (MHz)	2498.5MHz-2687.5MHz		System parameter
System/Channel Bandwidth (MHz)	5MHz	10MHz	System parameter
System Profile	3A-5	3A-10	Defined by WiMAX Forum
Modulation Schemes	QPSK1/2, QPSK3/4 16QAM1/2, 16QAM3/4, 64QAM1/2, 64QAM2/3, 64QAM3/4, 64QAM5/6		Identify all applicable UL modulations
Sampling Factor	28/25		System parameter
Sampling Frequency (MHz)	5.6MHz (3A-5)	11.2MHz (3A-10)	(Fs)
Sample Time (ns)	178.581ns (3A-5)	89.3ns (3A-10)	(1/Fs)
FFT Size (NFFT)	512 (3A-5)	1024 (3A-10)	(NFFT)
Sub-Carrier Spacing (kHz)	10.94KHz		(Δf)
Useful Symbol time (μs)	91.43μs		(Tb=1/Δf)
Guard Time (μs)	11.43μs		(Tg=Tb/cp); cp = cyclic prefix
OFDMA Symbol Time (μs)	102.857us		(Ts=Tb+Tg)
Frame Size (ms)	5ms		System parameter
TTG + RTG (μs or number of symbols)	165.7us		Idle time, system parameter
Number of DL OFDMA Symbols per Frame	Max: 29		Identify the allowed & maximum symbols, including both traffic & control symbols
Number of UL OFDMA Symbols per Frame	Max: 18		
DL:UL Symbol Ratio	Max 29:18		For determining UL duty factor
Power Class (dBm) Identify power	Power class 1 QPSK,16QAM,64QAM: 21.5dBm +0/-1.5 dB		Identify power class and tolerance
Wave1 / Wave2	Wave2 2 antennas for 2 RX and 1 TX without TX diversity		Describe antenna diversity info and MIMO requirements separately
UL Zone Types (FUSC, PUSC, OFUSC, OPUSC, AMC, TUSC1, TUSC2)	PUSC		Describe separately the symbol and sub-carrier/sub-channel structures applicable to each zone type
Maximum Number of UL Sub-Carriers	**5 MHz BW**	**10 MHz BW**	Identify the allowed and tested/to be tested parameters; include separate
	Null Sub-Carriers=104 Pilot Sub-Carriers=136 Data Sub-Carrier=272	Null Sub-Carriers=184 Pilot Sub-Carriers=280 Data Sub-Carriers=560	
UL Burst Maximum Average Power	**ANT 1 (Main)**	**ANT 2 (AUX) Rx only**	
	21.5dBm (5MHz)	NA	
	21.5dBm (10MHz)	NA	
Number and type of UL Control Symbols	3 PUSC symbols (used for ranging, CQICH and ACK/NACK)		

DESCRIPTION	PARAMETER		COMMENT
	ANT 1(Main)	Calculation	
UL Control Symbol Maximum Average Power	41.55mW (5MHz/QPSK)	141.25mW x 5/17	Identify the allowed and tested/to be tested parameters; include separate
	41.55mW (5MHz/16QAM)	141.25mW x 5/17	
	41.55mW (5MHz/64QAM)	141.25mW x 5/17	
	20.18mW (10MHz/QPSK)	141.25mW x 5/35	
	20.18mW (10MHz/16QAM)	141.25mW x 5/35	
	20.18mW (10MHz/64QAM)	141.25mW x 5/35	
UL Burst Peak-to-Average Power Ratio (PAR)	With DL:UL ratio=29:18, PAR is between 8.25 to 10.29 dB.		Identify the expected range and measured/tested PAR; explain separately the methods used / to be used to address SAR probe calibration and measurement error issues
Frame Averaged UL Transmission Duty Factor	The duty cycle is 31.25%. 15/48 = 0.3125 Crest factor is 1/0.3125=3.2 with 29:18 DL:UL ratio. S.F. = (CCP x 3 control symbols + MROP x 15 Traffic symbols) / (actual_OP x 15) CCP: Control Channel Power MROP: Maximum Rated Output Power Actual_OP: actual (measured) maximum power		Show calculations separately and explain how the applicable CF (crest factor) used / to be use in the SAR measurements is derived and how the control symbols are accounted for

8. WIMAX/802.16e DEVICE SPECIFICATION

8.1 WIMAX ZONE TYPES

The device and its system are both transmitting using only PUSC zone type. This enables multiple users to transmit simultaneously within the system. The maximum DL:UL symbol ratio can be determined according to the PUSC requirements. The system transmit an odd number of symbols using DL-PUSC consisting of even multiples of traffics and control symbols plus one symbol for the preamble. Multiples of three symbols are transmitted by the device using UL-PUSC. The OFDMA symbol time allows up to 48 downlink and uplink symbols in each 5 ms frame. TTG and RTG are also included in each frame as DL/UL transmission gaps; therefore, the system can only allow 47 or less symbols per frame.

8.2 POWER MEASUREMENT

Set the transmitter under transmission condition continuously at specific mode with maximum output. 15 traffic symbols are transmitting at max. power and three control symbols are not used nor activate.

The power meter was used to read the response of the power sensor. Record the power level and PK to AV ratio.

The maximum conducted output power is measured for the uplink burst at DL:UL ratio=29:18 that is measured for the uplink bursts through triggering and gating.

The measured results are as below table:

OUTPUT POWER TABLE

Channel Bandwidth	UL zone type / DL/UL Ratio	CH Freq. (MHz)	Conducted Power (dBm)		Peak to Average ratio (dB)	UL modulation
			AV	PK		
5MHz	PUSC / 29:18	2498.5	21.47	30.31	8.84	QPSK
			21.46	30.04	8.58	16QAM
			21.45	30.32	8.87	64QAM
		2593.0	21.45	30.79	9.34	QPSK
			21.44	30.37	8.93	16QAM
			21.43	30.68	9.25	64QAM
		2687.5	21.48	31.09	9.61	QPSK
			21.43	31.52	10.09	16QAM
			21.41	31.70	10.29	64QAM
10MHz	PUSC / 29:18	2501	21.46	30.11	8.65	QPSK
			21.44	29.84	8.40	16QAM
			21.42	30.15	8.73	64QAM
		2593	21.47	29.79	8.32	QPSK
			21.44	29.69	8.25	16QAM
			21.43	29.70	8.27	64QAM
		2685	21.48	31.73	10.25	QPSK
			21.43	31.46	10.03	16QAM
			21.43	31.51	10.08	64QAM

Test plots of conducted power and PAR ratio for middle channel

Bandwidth 5MHz / Modulation : QPSK1/2

2593MHz

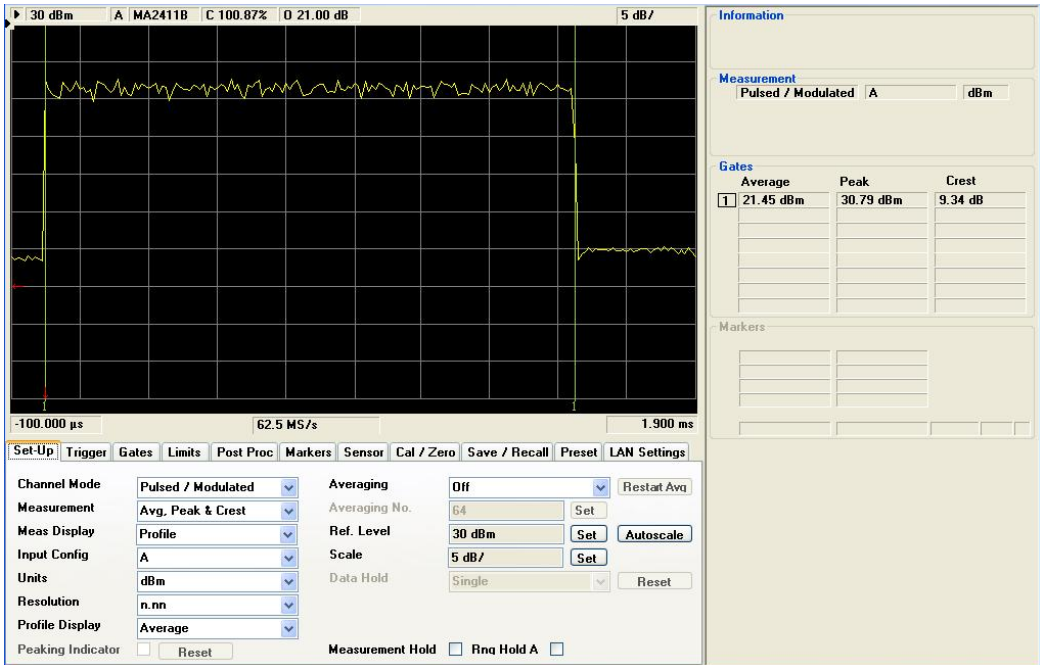

Bandwidth 5MHz / Modulation : 16QAM 1/2

2593MHz

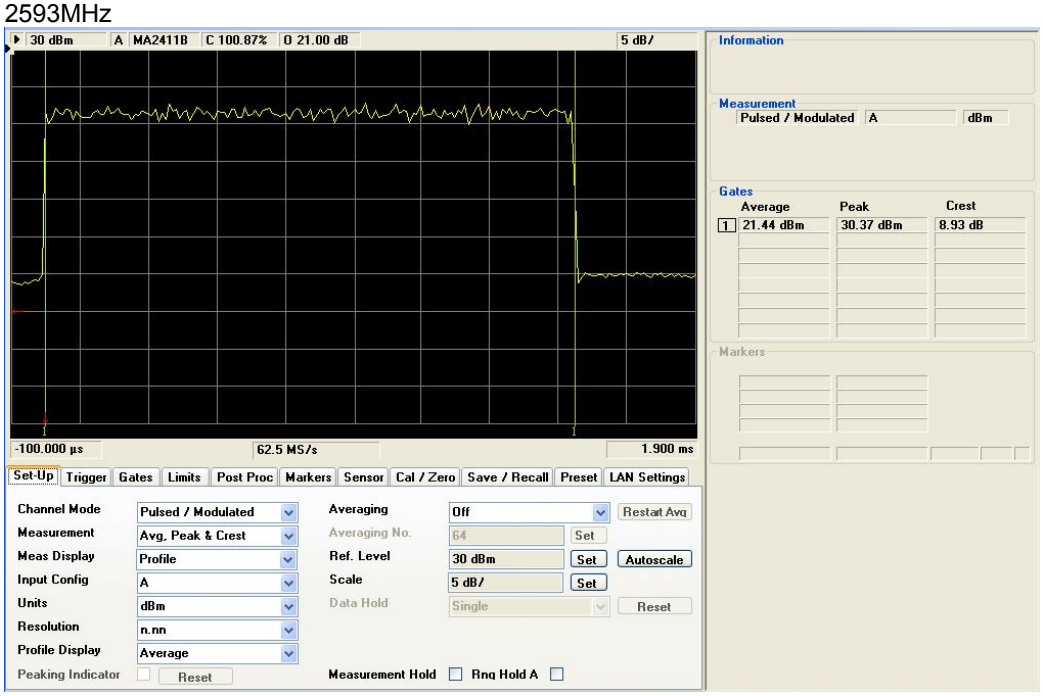

Bandwidth 5MHz / Modulation : 64QAM 1/2

2593MHz

Bandwidth 10MHz / Modulation : QPSK1/2

2593MHz

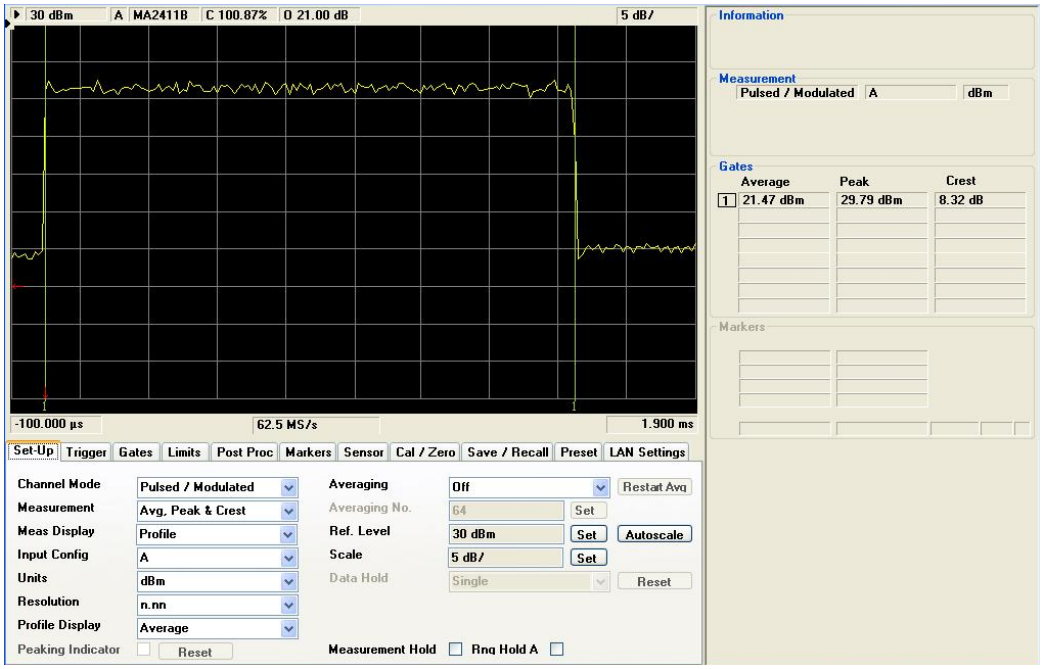

Bandwidth 10MHz / Modulation : 16QAM 1/2

2593MHz

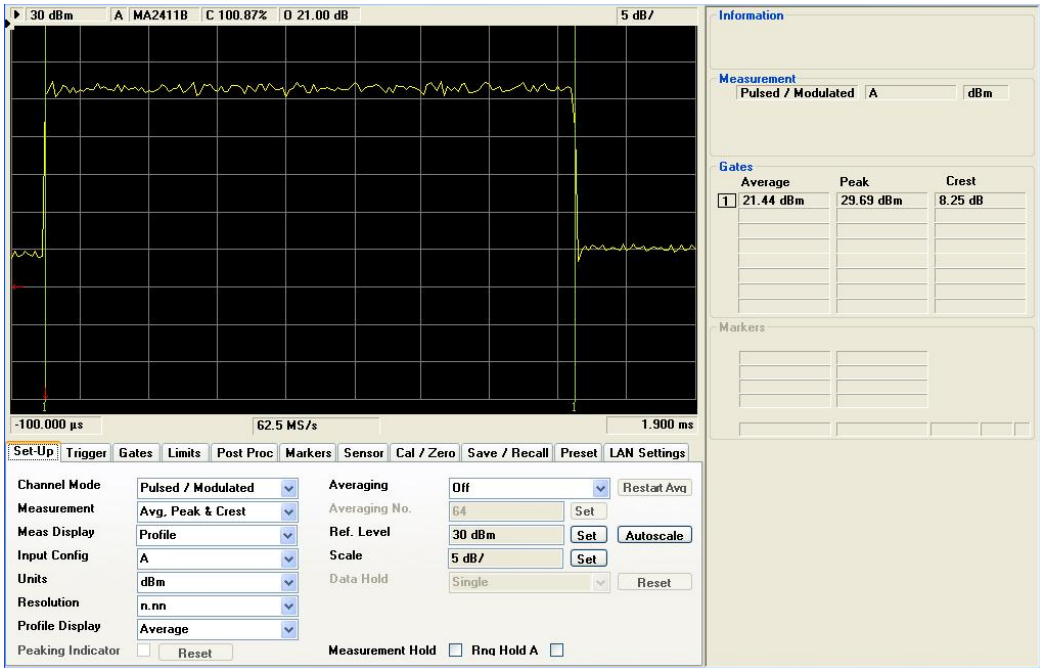

Bandwidth 10MHz / Modulation : 64QAM 1/2

2593MHz

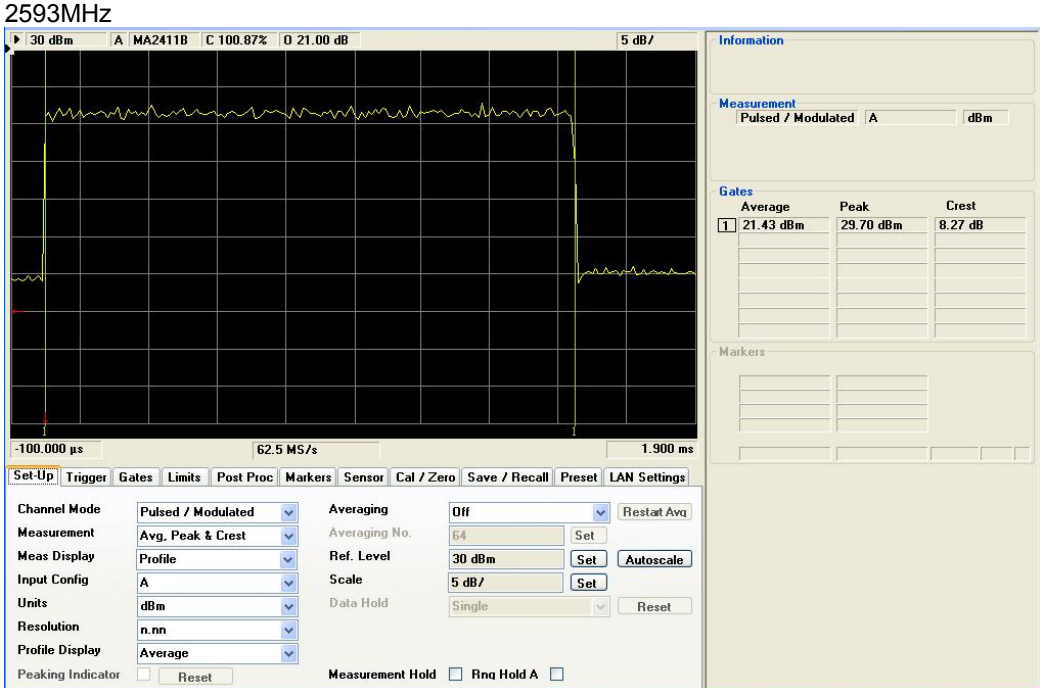

8.3 DUTY FACTOR

The transmitter maximum DL/UL symbol ratio is 29:18 with 15 traffic symbol transmitting at the max. power and three control symbols are not activate nor used in the SAR measurement, the duty cycle = 15/48 =0.3125.
Duty Factor = 1/(duty cycle)=3.2 for this periodic pulse signal device.

The SAR measurement is compensated using factors is as the below list:

Channel BW	UL zone type	DL/UL Ratio	UL duty cycle	*cf factor*	UL modulation
5MHz	PUSC	29/18	31.25%	*3.2*	QPSK 16QAM 64QAM
10MHz	PUSC	29/18	31.25%	*3.2*	QPSK 16QAM 64QAM

Test plot of Duty cycle (Only show the plots of 5MHz / QPSK / middle channel)

2 plots are measured for duty cycle to each condition shown on above summary table
Plot 1 is used to get the burst length of test signal.
Burst length = Mark 3 – Mark 1=8.217ms-3.217ms=5ms

Plot 1

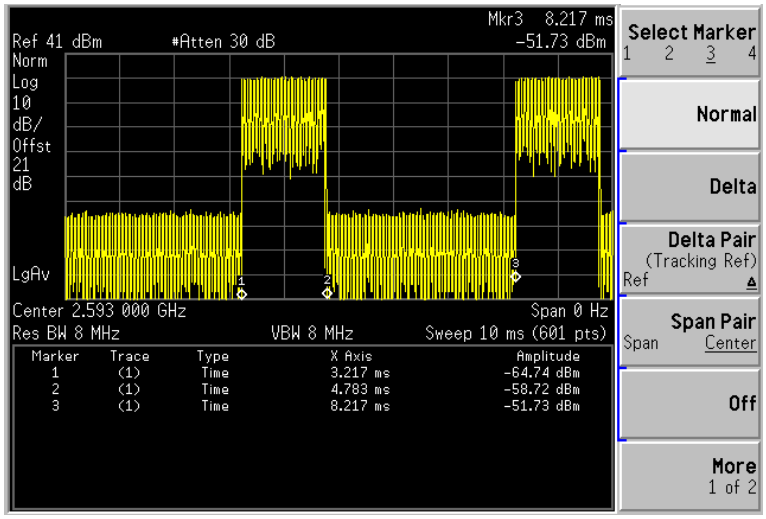

Plot 2 is used to get the UL time of test signal.

Mark 2 – Mark 1 =15 symbols UL time =2.595ms-1.045ms=1.55ms

Plot 2

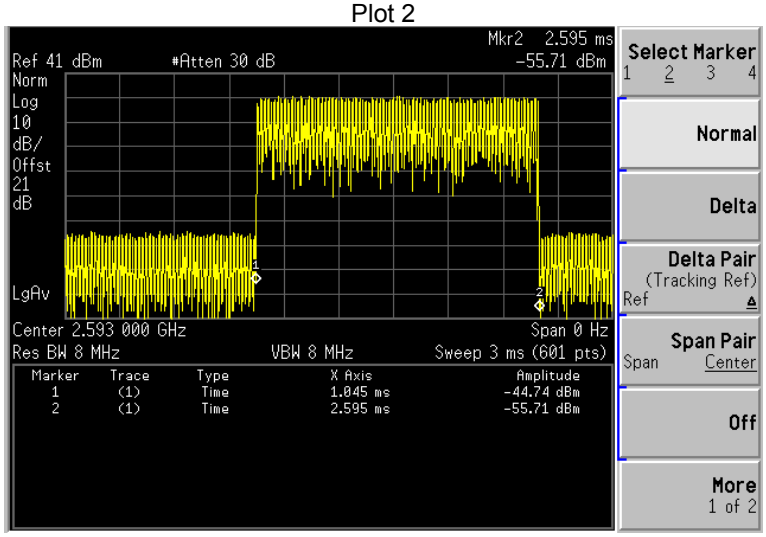

Duty cycle = 15 symbols UL time / Burst length * 100 %
= 1.55 / 5 *100 %
= 31 %

Test plot of Duty cycle (Only show the plots of 10MHz / QPSK / middle channel)

2 plots are measured for duty cycle to each condition shown on above summary table
Plot 1 is used to get the burst length of test signal.
Burst length = Mark 3 – Mark 1=7.183ms-2.183ms=5ms

Plot 1

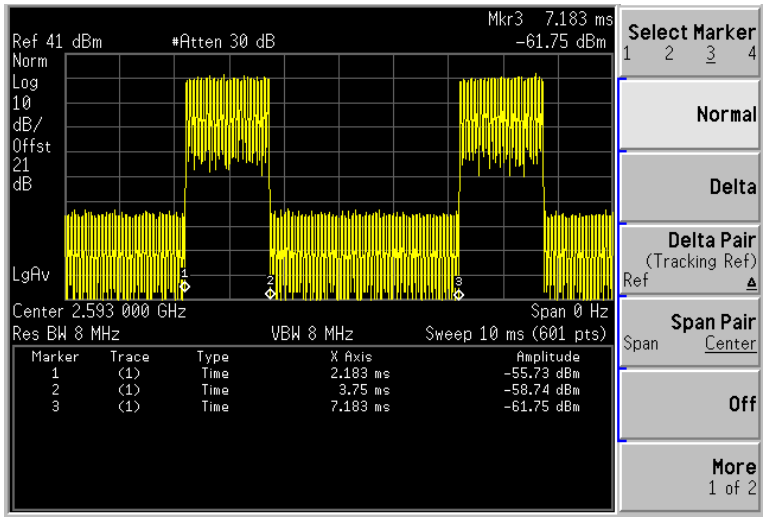

Plot 2 is used to get the UL time of test signal.

Mark 2 – Mark 1 =15 symbols UL time =2.485ms-0.935ms=1.55ms

Plot 2

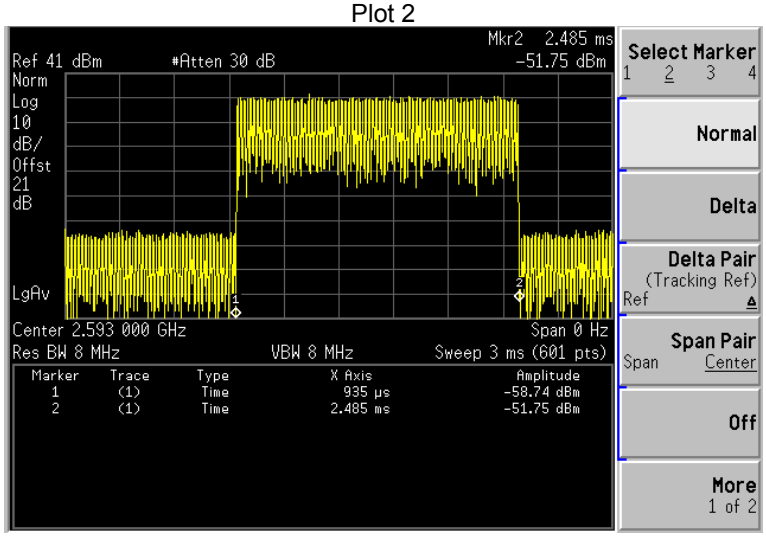

Duty cycle = 15 symbols UL time / Burst length * 100 %
= 1.55 / 5 *100 %
= 31 %

8.4 SCALING FACTOR

Step-by-step control symbols Power and scaling parameters are as the following calculation:

a. Maximum Rated Output Power (MROP) is provided by applicant.

Maximum Rated Output Power (MROP) Used to Calculate the Scaling Factor	
Mode	**Antenna 1**
5MHz/QPSK	21.5dBm / 141.25 mW
5MHz/16QAM	21.5dBm / 141.25 mW
5MHz/64QAM	21.5dBm / 141.25 mW
10MHz/QPSK	21.5dBm / 141.25 mW
10MHz/16QAM	21.5dBm / 141.25 mW
10MHz/64QAM	21.5dBm / 141.25 mW

b. For 5 MHz Channel BW: The control channels may occupy up to 5 slots during normal operation. A slot is a sub-channel with the duration of 3 symbols. There are a total of 17 slots in 5 MHz channel configuration. A maximum of two simultaneous CQICH reports are possible, which can occupy up to 2 slots. A maximum of three slots can be used for HARQ ACK/NAK by the five possible DL HARQ bursts in the previous DL frame. The 5 ACK/NAK bits each occupies ½ a slot. These 5 slots correspond to 5/17 of the total number of uplink slots.

Antenna 1	Calculation
41.55 mW for 5MHz / QPSK	141.25 mW x 5/17
41.55 mW for 5MHz / 16QAM	141.25 mW x 5/17
41.55 mW for 5MHz / 64QAM	141.25 mW x 5/17

c. For 10MHz Channel BW: The control channels may occupy up to 5 slots during normal operation. A slot is a sub-channel with the duration of 3 symbols. There are a total of 35 slots in the 10 MHz channel configuration. A maximum of two simultaneous CQICH reports are possible, which can occupy up to 2 slots. A maximum of three slots can be used for HARQ ACK/NAK by the five possible DL HARQ bursts in the previous DL frame. The 5 ACK/NAK bits each occupies ½ a slot. These 5 slots correspond to 5/35 of the total number of uplink slots.

Antenna 1	Calculation
20.18 mW for 10MHz / QPSK	141.25 mW x 5/35
20.18 mW for 10 MHZ / 16QAM	141.25 mW x 5/35
20.18 mW for 10 MHZ / 64QAM	141.25 mW x 5/35

d. The target output power for DL:UL ratio of 29:18 is calculated as the following:

Target output power = **(CCP x 3)+ (MROP x 15)**

Modulation	Channel Bandwidth	29:18 DL:UL Ratio Power /mW
QPSK	5 MHz	(41.55 x 3)+(141.25 x 15)=2243.44
16QAM	5 MHz	(41.55 x 3)+(141.25 x 15)=2243.44
16QAM	5 MHz	(41.55 x 3)+(141.25 x 15)=2243.44
QPSK	10 MHz	(20.18 x 3)+(141.25 x 15)= 2179.34
16QAM	10 MHz	(20.18 x 3)+(141.25 x 15)= 2179.34
16QAM	10 MHz	(20.18 x 3)+(141.25 x 15)= 2179.34

MROP: Maximum Rated Output Power
CCP: Control Channel Power

Scaling factor are shown on below table

Freq./MHz	Measured Power (mW)	Number of Traffic Symbols	29:18 Traffic Symbol Power (Actual OP x 15) (mW)	29:18 Rated Power ((CCP x 3)+ (MROP x 15)) (mW)	Scaling Factor (rated power/traffic power)
5MHz / QPSK					
2498.5	140.28	15	2104.22	2243.44	1.07
2593	139.64	15	2094.55	2243.44	1.07
2687.5	140.60	15	2109.07	2243.44	1.06
5MHz / 16QAM					
2498.5	139.96	15	2099.38	2243.44	1.07
2593	139.32	15	2089.74	2243.44	1.07
2687.5	139.00	15	2084.93	2243.44	1.08
5MHz / 64QAM					
2498.5	139.64	15	2094.55	2243.44	1.07
2593	139.00	15	2084.93	2243.44	1.08
2687.5	138.36	15	2075.35	2243.44	1.08
10MHz / QPSK					
2501	139.96	15	2099.38	2179.34	1.04
2593	140.28	15	2104.22	2179.34	1.04
2685	140.60	15	2109.07	2179.34	1.03
10MHz / 16QAM					
2501	139.32	15	2089.74	2179.34	1.04
2593	139.32	15	2089.74	2179.34	1.04
2685	139.00	15	2084.93	2179.34	1.05
10MHz / 64QAM					
2501	138.68	15	2080.13	2179.34	1.05
2593	139.00	15	2084.93	2179.34	1.05
2685	139.00	15	2084.93	2179.34	1.05

9. TEST SETUP

The test setup is shown in the below picture. The USB Adapter (EUT) is plugged into the HOST (Laptop PC) as it would be in the field on a normal network.

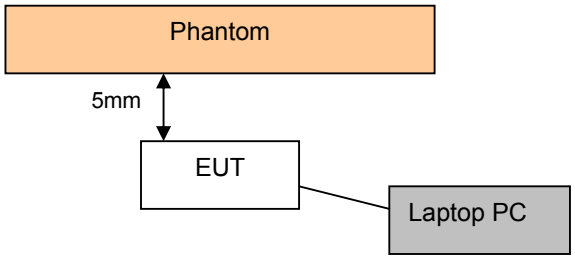

Test Signal detail:
Test Signal generator:
Run **Sequans software tool** (Revsion 4.6.2.1-23712) on EUT and use Host (Laptop PC) to configure this tool to generate the UL test signal from EUT. The detail configuration procedures are as below step.

A.) Bootup DUT with specified the FFT profile, FFT512 or FFT1024, by startup script file,

mfg_SQN1130-RDX-rfcMAX2839-fft512.sh or mfg_SQN1130-RDX-rfcMAX2839-fft1024.sh.

EUT bootup script file	FFT#	Bandwidth
mfg_SQN1130-RDX-rfcMAX2839-fft512.sh	512	5MHz
mfg_SQN1130-RDX-rfcMAX2839-fft1024.sh	1024	10MHz

B.) Set the test signal pattern (UL subframe pattern) by

"setRfTxConfig frequency=2501000 tx-power=2100 ul-subframe-width=5"
It set the test signal center frequency at 2501000 KHz, output power 21dBm and 5 time slots (UL subframe). This 5 time slots is equal to 15 symbols which meet the DL/UL symbol 29/18 without 3 control symbols.

15 = 18 – 3 (symbol)

C.) Enable this test signal from EUT by

"starttxtest switch=1”

Based on the test requirement, configure the EUT by the process as above to generate the test signal DL/UL = 29/18 frame pattern continuously without 3 control symbols. Then, follow the TCB workshop document (“SAR Measurement Procedure” in Oct., 2009) to scaled up for 3 missing control symbols.

10. TEST RESULTS

10.1 TEST PROCEDURES

The EUT plugged into the notebook. Use the software to control the EUT channel and transmission power. Then record the conducted power before the testing. Place the EUT to the specific test location. After the testing, must writing down the conducted power of the EUT into the report. The SAR value was calculated via the 3D spline interpolation algorithm that has been implemented in the software of DASY4 SAR measurement system manufactured and calibrated by SPEAG. According to the IEEE 1528 standards, the recommended procedure for assessing the peak spatial-average SAR value consists of the following steps:

- Power reference measurement
- Verification of the power reference measurement
- Area scan
- Zoom scan
- Power reference measurement

The area scan was performed for the highest spatial SAR location. The zoom scan with 30mm x 30mm x 30mm volume was performed for SAR value averaged over 1g and 10g spatial volumes.

In the zoom scan, the distance between the measurement point at the probe sensor location (geometric center behind the probe tip) and the phantom surface is 2mm and maintained at a constant distance of ±0.5mm during a zoom scan to determine peak SAR locations. The distance is 2mm between the first measurement point and the bottom surface of the phantom. The secondary measurement point to the bottom surface of the phantom is with 8mm separation distance. The cube size is 7 x 7 x 7 points consists of 343 points and the grid space is 5mm.

The measurement time is 0.5s at each point of the zoom scan. The probe boundary effect compensation shall be applied during the SAR test. Because of the tip of the probe to the Phantom surface separated distances are longer than half a tip probe diameter.

In the area scan, the separation distance is 2mm between the each measurement point and the phantom surface. The scan size shall be included the transmission portion of the EUT. The measurement time is the same as the zoom scan. At last the reference power drift shall be less than ±5%.

10.2 DESCRIPTION OF TEST CONDITION

TEST DATE	TEMPERATURE(°C)		HUMIDITY(%RH)	TESTED BY
	AIMBENT	LIQUID		
Jun. 19, 2010	23.0	22.6	62	Aaron Liang
Jun. 19, 2010	23.0	22.6	62	Aaron Liang
Jun. 20, 2010	23.1	22.8	61	Aaron Liang
Jun. 20, 2010	23.1	22.8	61	Aaron Liang
Jun. 21, 2010	23.0	22.6	62	Aaron Liang
Jun. 22, 2010	23.1	22.8	61	Aaron Liang
Jun. 23, 2010	23.0	22.6	62	Aaron Liang

10.3 REDUCTION OF TEST CHANNEL

Follow below steps to do test reduction. It has been approved by FCC in tracking no.:313914

Step 1: The same rated maximum output applies to all coding rates in a modulation, therefore we only choose the lowest coding rate (QPSK 1/2, 16QAM1/2 and 64QAM 1/2) for SAR test.

Step 2: Perform SAR test with highest output channel for each positions[see note2], and then use the Scaled SAR of highest power channel to determine the test reduction, if it less than 0.8W/kg, SAR of other channels under the same configuration will be reduce.

Note1: For Horizontal-up and Horizontal-down positions the SAR value is very close to 0.8 W/kg. So we selected to perform the SAR test.

Note2: After we finished the SAR test on the Horizontal-up and Horizontal-down positions, we noted that the high channel always give the higher SAR value than M/L channel (maximum conducted output power of each channel are very close, within 0.07dB). We believe it is due to the reason that the antenna has higher efficiency or performance at higher frequency, therefore the high channel was selected for the initial SAR test for each position.

Step3: We follow the same procedure for 10MHz channel bandwidth mode on each modulation (16QAM & 64QAM).

10.4 MEASURED SAR RESULTS

For 5MHz

Bandwidth	5MHz		Modulation		QPSK 1/2		TX antenna		Antenna 1	
SAR (W/ kg)	Horizontal-up		Horizontal-down		Vertical-front		Vertical-back		Tip	
Channel	Meas.	Scaled	Meas.	Scaled	Meas.	Scaled	Meas.	Scaled	Meas.	Scaled
Low	0.447	0.478	0.650	0.696	*		*		*	
Middle	0.723	0.774	0.862	0.922	*		*		*	
High	0.682	0.723	0.960	1.018	0.141	0.149	0.488	0.517	0.484	0.513
Bandwidth	5MHz		Modulation		16QAM 1/2		TX antenna		Antenna 1	
SAR (W/ kg)	Horizontal-up		Horizontal-down		Vertical-front		Vertical-back		Tip	
Channel	Meas.	Scaled	Meas.	Scaled	Meas.	Scaled	Meas.	Scaled	Meas.	Scaled
Low	0.441	0.472	0.666	0.713	*		*		*	
Middle	0.610	0.653	0.899	0.962	*		*		*	
High	0.761	0.822	1.100	**1.188**	0.107	0.116	0.474	0.512	0.515	0.556
Bandwidth	5MHz		Modulation		64QAM 1/2		TX antenna		Antenna 1	
SAR (W/ kg)	Horizontal-up		Horizontal-down		Vertical-front		Vertical-back		Tip	
Channel	Meas.	Scaled	Meas.	Scaled	Meas.	Scaled	Meas.	Scaled	Meas.	Scaled
Low	0.477	0.510	0.619	0.662	*		*		*	
Middle	0.670	0.724	0.835	0.902	*		*		*	
High	0.799	0.863	0.91	0.983	0.114	0.123	0.49	0.529	0.443	0.478

NOTE:

1. In this testing, the limit for General Population Spatial Peak averaged over 1g, **1.6 W/kg**, is applied.
2. Please see the Appendix A for the data.
3. The variation of the EUT conducted power measured before and after SAR testing should not over 5%.
4. When scaled SAR is less than 0.8W/kg, SAR of other channels under the same configuration will be reduced.

For 10MHz

Bandwidth	10MHz		Modulation		QPSK 1/2		TX antenna		Antenna 1	
SAR (W/ kg)	Horizontal-up		Horizontal-down		Vertical-front		Vertical-back		Tip	
Channel	Meas.	Scaled	Meas.	Scaled	Meas.	Scaled	Meas.	Scaled	Meas.	Scaled
Low	0.366	0.381	0.537	0.558	*		*		*	
Middle	0.480	0.499	0.881	0.916	*		*		*	
High	0.614	0.632	0.888	0.915	0.128	0.132	0.516	0.531	0.481	0.495
Bandwidth	10MHz		Modulation		16QAM 1/2		TX antenna		Antenna 1	
SAR (W/ kg)	Horizontal-up		Horizontal-down		Vertical-front		Vertical-back		Tip	
Channel	Meas.	Scaled	Meas.	Scaled	Meas.	Scaled	Meas.	Scaled	Meas.	Scaled
Low	0.363	0.378	0.626	0.651	*		*		*	
Middle	0.485	0.504	1.020	1.061	*		*		*	
High	0.635	0.667	1.100	1.155	0.135	0.142	0.534	0.561	0.504	0.529
Bandwidth	10MHz		Modulation		64QAM 1/2		TX antenna		Antenna 1	
SAR (W/ kg)	Horizontal-up		Horizontal-down		Vertical-front		Vertical-back		Tip	
Channel	Meas.	Scaled	Meas.	Scaled	Meas.	Scaled	Meas.	Scaled	Meas.	Scaled
Low	0.353	0.371	0.527	0.553	*		*		*	
Middle	0.456	0.479	0.718	0.754	*		*		*	
High	0.606	0.636	0.884	0.928	0.123	0.129	0.508	0.533	0.465	0.488

NOTE:

1. In this testing, the limit for General Population Spatial Peak averaged over 1g, **1.6 W/kg**, is applied.
2. Please see the Appendix A for the data.
3. The variation of the EUT conducted power measured before and after SAR testing should not over 5%.
4. When scaled SAR is less than 0.8W/kg, SAR of other channels under the same configuration will be reduced.

10.5 POWER DRIFT TABLE

For 5MHz

MODULATION	FREQUENCY (MHz)	TEST POSITION	CONDUCTED POWER (dBm)		POWER DRIFT (%)
			BEGIN	AFTER	
QPSK 1/2	2498.5	HORIZONTAL UP	21.47	21.35	-2.73
	2593.0		21.45	21.38	-1.60
	2687.5		21.48	21.39	-2.05
	2498.5	HORIZONTAL DOWN	21.47	21.33	-3.17
	2593.0		21.45	21.36	-2.05
	2687.5		21.48	21.32	-3.62
	2687.5	VERTICAL FRONT	21.48	21.37	-2.50
	2687.5	VERTICAL BACK	21.48	21.38	-2.28
	2687.5	TIP	21.48	21.40	-1.83

MODULATION	FREQUENCY (MHz)	TEST POSITION	CONDUCTED POWER (dBm)		POWER DRIFT (%)
			BEGIN	AFTER	
16QAM 1/2	2498.5	HORIZONTAL UP	21.46	21.39	-1.60
	2593.0		21.44	21.37	-1.60
	2687.5		21.43	21.33	-2.28
	2498.5	HORIZONTAL DOWN	21.46	21.32	-3.17
	2593.0		21.44	21.29	-3.39
	2687.5		21.43	21.28	-3.39
	2687.5	VERTICAL FRONT	21.43	21.32	-2.50
	2687.5	VERTICAL BACK	21.43	21.36	-1.60
	2687.5	TIP	21.43	21.30	-2.95

MODULATION	FREQUENCY (MHz)	TEST POSITION	CONDUCTED POWER (dBm)		POWER DRIFT (%)
			BEGIN	AFTER	
64QAM 1/2	2498.5	HORIZONTAL UP	21.45	21.33	-2.73
	2593.0		21.43	21.30	-2.95
	2687.5		21.41	21.35	-1.37
	2498.5	HORIZONTAL DOWN	21.45	21.29	-3.62
	2593.0		21.43	21.26	-3.84
	2687.5		21.41	21.32	-2.05
	2687.5	VERTICAL FRONT	21.41	21.36	-1.14
	2687.5	VERTICAL BACK	21.41	21.31	-2.28
	2687.5	TIP	21.41	21.35	-1.37

For 10MHz

MODULATION	FREQUENCY (MHz)	TEST POSITION	CONDUCTED POWER (dBm)		POWER DRIFT (%)
			BEGIN	AFTER	
QPSK 1/2	2501	HORIZONTAL UP	21.46	21.31	-3.39
	2593		21.47	21.35	-2.73
	2685		21.48	21.33	-3.39
	2501	HORIZONTAL DOWN	21.46	21.30	-3.62
	2593		21.47	21.32	-3.39
	2685		21.48	21.35	-2.95
	2685	VERTICAL FRONT	21.48	21.33	-3.39
	2685	VERTICAL BACK	21.48	21.37	-2.50
	2685	TIP	21.48	21.36	-2.73

MODULATION	FREQUENCY (MHz)	TEST POSITION	CONDUCTED POWER (dBm)		POWER DRIFT (%)
			BEGIN	AFTER	
16QAM 1/2	2501	HORIZONTAL UP	21.44	21.33	-2.50
	2593		21.44	21.32	-2.73
	2685		21.43	21.35	-1.83
	2501	HORIZONTAL DOWN	21.44	21.30	-3.17
	2593		21.44	21.35	-2.05
	2685		21.43	21.33	-2.28
	2685	VERTICAL FRONT	21.43	21.29	-3.17
	2685	VERTICAL BACK	21.43	21.27	-3.62
	2685	TIP	21.43	21.35	-1.83

MODULATION	FREQUENCY (MHz)	TEST POSITION	CONDUCTED POWER (dBm)		POWER DRIFT (%)
			BEGIN	AFTER	
64QAM 1/2	2501	HORIZONTAL UP	21.42	21.32	-2.28
	2593		21.43	21.35	-1.83
	2685		21.43	21.33	-2.28
	2501	HORIZONTAL DOWN	21.42	21.29	-2.95
	2593		21.43	21.26	-3.84
	2685		21.43	21.35	-1.83
	2685	VERTICAL FRONT	21.43	21.33	-2.28
	2685	VERTICAL BACK	21.43	21.31	-2.73
	2685	TIP	21.43	21.35	-1.83

11. SAR LIMITS

HUMAN EXPOSURE	SAR (W/kg)	
	(GENERAL POPULATION / UNCONTROLLED EXPOSURE ENVIRONMENT)	(OCCUPATIONAL / CONTROLLED EXPOSURE ENVIRONMENT)
Spatial Average (whole body)	0.08	0.4
Spatial Peak (averaged over 1 g)	**1.6**	8.0
Spatial Peak (hands / wrists / feet / ankles averaged over 10 g)	4.0	20.0

12. SAR ERROR CONSIDERATION

In order to estimate the measurement error due to PAR issues, the configuration with the highest SAR in each channel bandwidth and frequency band is measured at various power levels, from approximately 12.5 mW at approx. 3 dB steps, until the maximum power is reached. During the tests, the bottom of EUT is positioned at 5 mm separation distance to flat phantom.
Control EUT to transmit at various average power level and do single point peak SAR measurement at specified power level. The reported power is RMS average measured during burst-on period by trigger and gating.

Test condition

Test position	Horizontal down
Test frequency	2687.5 MHz for 5MHz bandwidth 2685 MHz for 10MHz bandwidth
Modulation	QPSK 1/2 ,16QAM 1/2 , 64QAM 1/2

Test result as below:

5MHz / QPSK

Average Power (mW):	12.54	25.14	49.65	100.12	141.18	200.00
Single Point SAR (W/kg):	0.159	0.327	0.642	1.320	1.900	
Linear line (SAR):	0.159	0.319	0.630	1.269	1.790	2.536
Estimation (%):	0.00%	2.58%	1.98%	3.98%	6.14%	

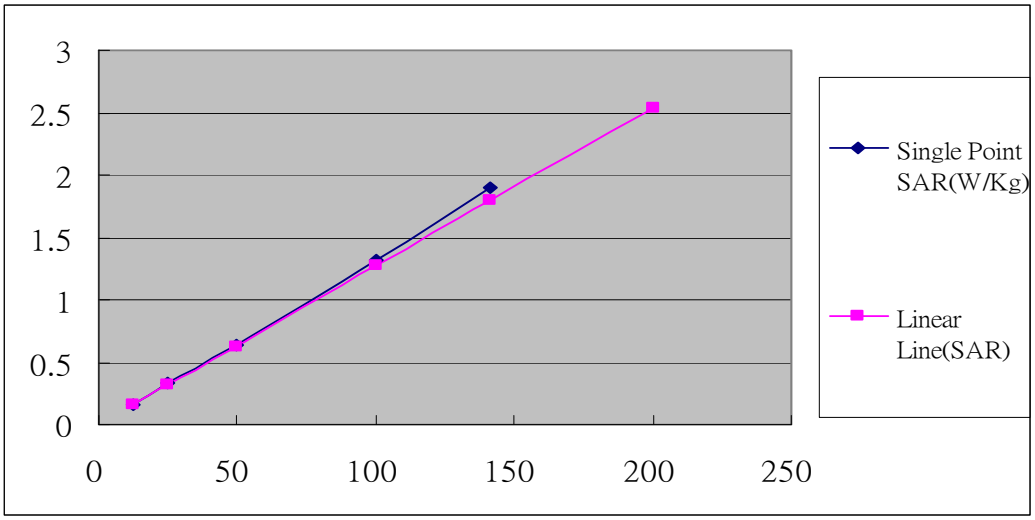

5MHz / 16QAM

Average Power (mW):	12.46	25.04	50.12	99.56	140.87	200.00
Single Point SAR (W/kg):	0.157	0.330	0.670	1.330	1.950	
Linear line (SAR):	0.157	0.316	0.632	1.254	1.775	2.520
Estimation (%):	0.00%	4.59%	6.09%	6.02%	9.86%	

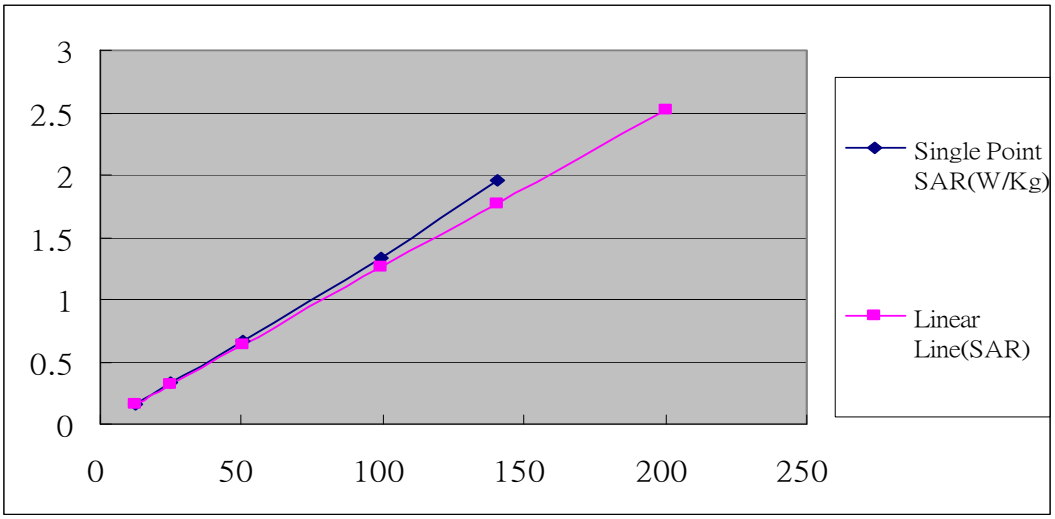

5MHz / 64QAM

Average Power (mW):	12.61	25.13	49.87	100.32	141.31	200.00
Single Point SAR (W/kg):	0.151	0.312	0.612	1.250	1.814	
Linear line (SAR):	0.151	0.301	0.597	1.201	1.692	2.395
Estimation (%):	0.00%	3.68%	2.48%	4.05%	7.20%	

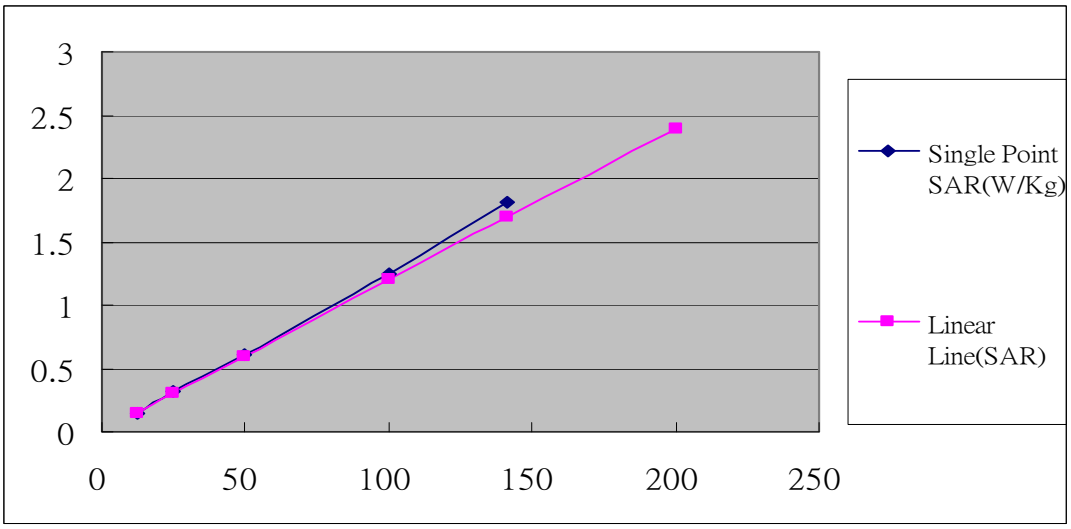

10MHz / QPSK

Average Power (mW):	12.43	24.98	49.53	99.21	141.10	200.00
Single Point SAR (W/kg):	0.140	0.286	0.582	1.214	1.742	
Linear line (SAR):	0.140	0.281	0.558	1.117	1.589	2.253
Estimation (%):	0.00%	1.65%	4.33%	8.64%	9.61%	

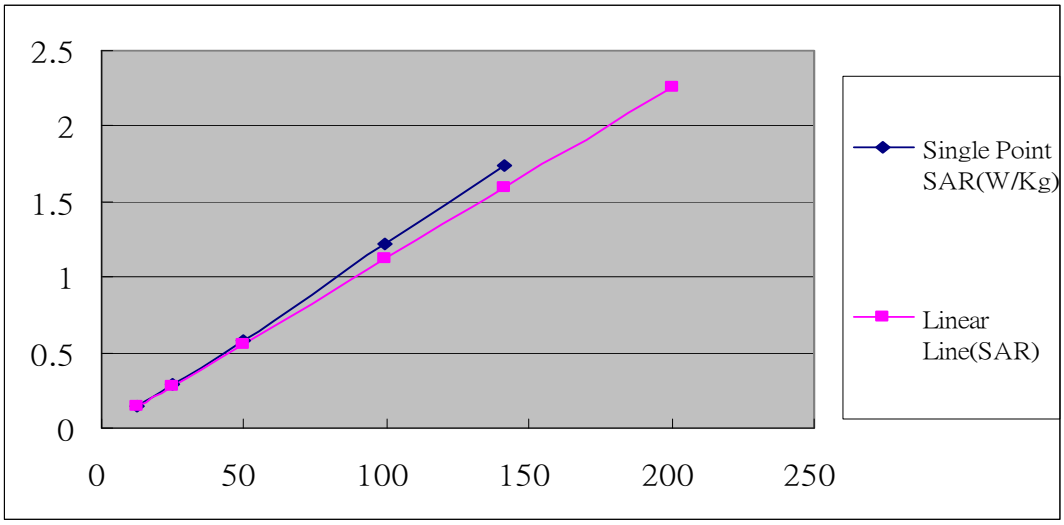

10MHz / 16QAM

Average Power (mW):	12.56	25.04	50.10	100.20	141.21	200.00
Single Point SAR (W/kg):	0.158	0.325	0.671	1.340	1.930	
Linear line (SAR):	0.158	0.315	0.630	1.260	1.776	2.516
Estimation (%):	0.00%	3.18%	6.47%	6.31%	8.65%	

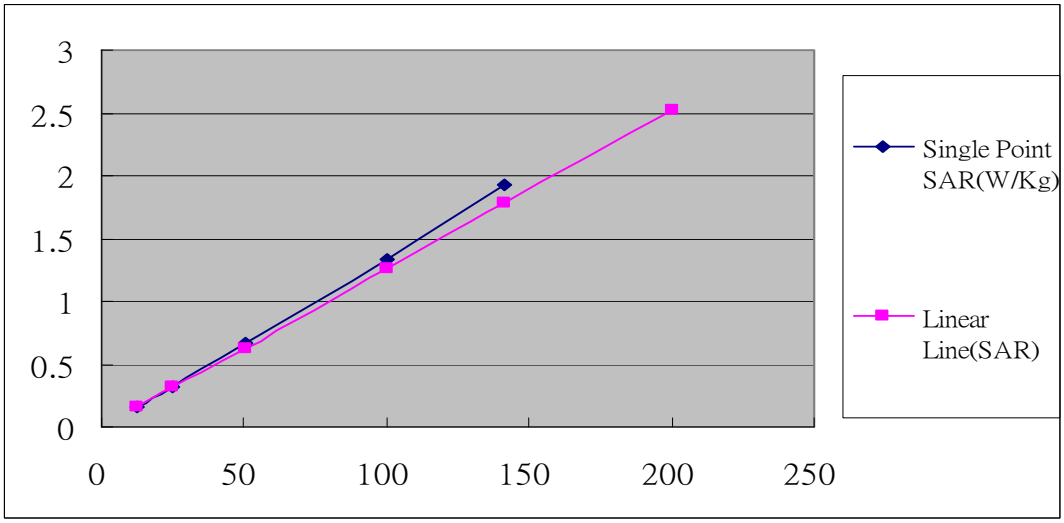

10MHz / 64QAM

Average Power (mW):	12.52	24.97	49.56	99.63	141.21	200.00
Single Point SAR (W/kg):	0.149	0.304	0.624	1.245	1.790	
Linear line (SAR):	0.149	0.297	0.612	1.186	1.681	2.380
Estimation (%):	0.00%	2.30%	1.96%	5.00%	6.51%	

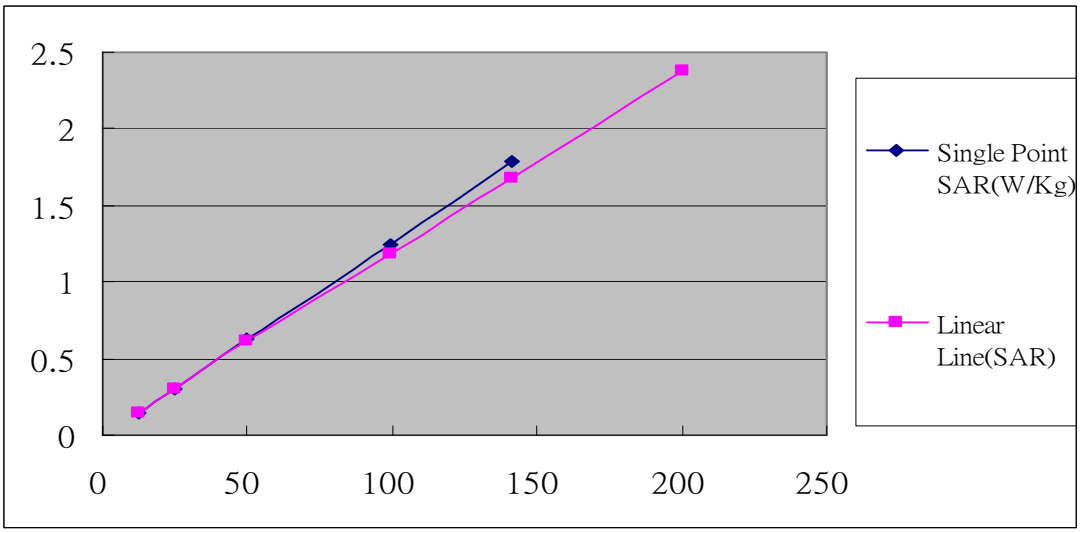

13. INFORMATION ON THE TESTING LABORATORIES

We, Bureau Veritas Consumer Products Services (H.K.) Ltd., Taoyuan Branch, were founded in 1988 to provide our best service in EMC, Radio, Telecom and Safety consultation. Our laboratories are accredited and approved according to ISO/IEC 17025.

Copies of accreditation certificates of our laboratories obtained from approval agencies can be downloaded from our web site: www.adt.com.tw/index.5/phtml. If you have any comments, please feel free to contact us at the following:

Linko EMC/RF Lab:
Tel: 886-2-26052180
Fax: 886-2-26051924

Hsin Chu EMC/RF Lab:
Tel: 886-3-5935343
Fax: 886-3-5935342

Hwa Ya EMC/RF/Safety/Telecom Lab:
Tel: 886-3-3183232
Fax: 886-3-3185050

Web Site: www.adt.com.tw

The address and road map of all our labs can be found in our web site also.

---END---

APPENDIX A: TEST DATA

Liquid Level Photo

Tissue MSL2450MHz D=152mm

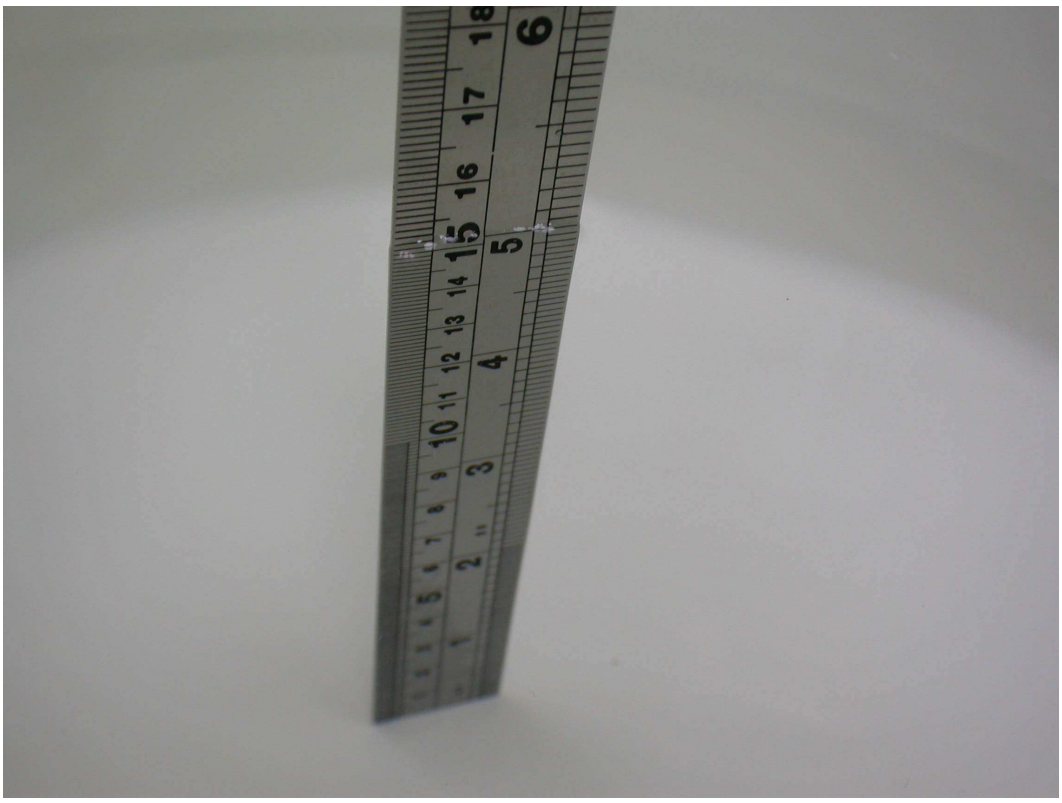

Tissue MSL2600MHz D=152mm

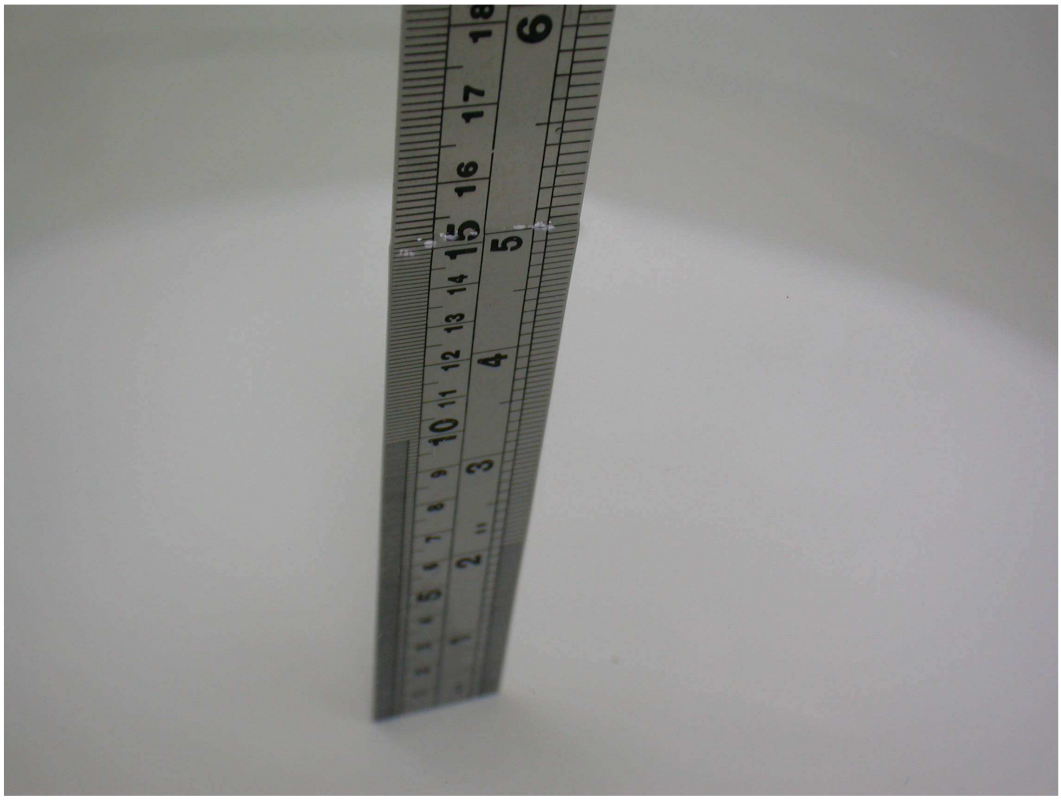

Tissue MSL2450MHz D=151mm

Tissue MSL2600MHz D=151mm

Tissue MSL2600MHz D=154mm

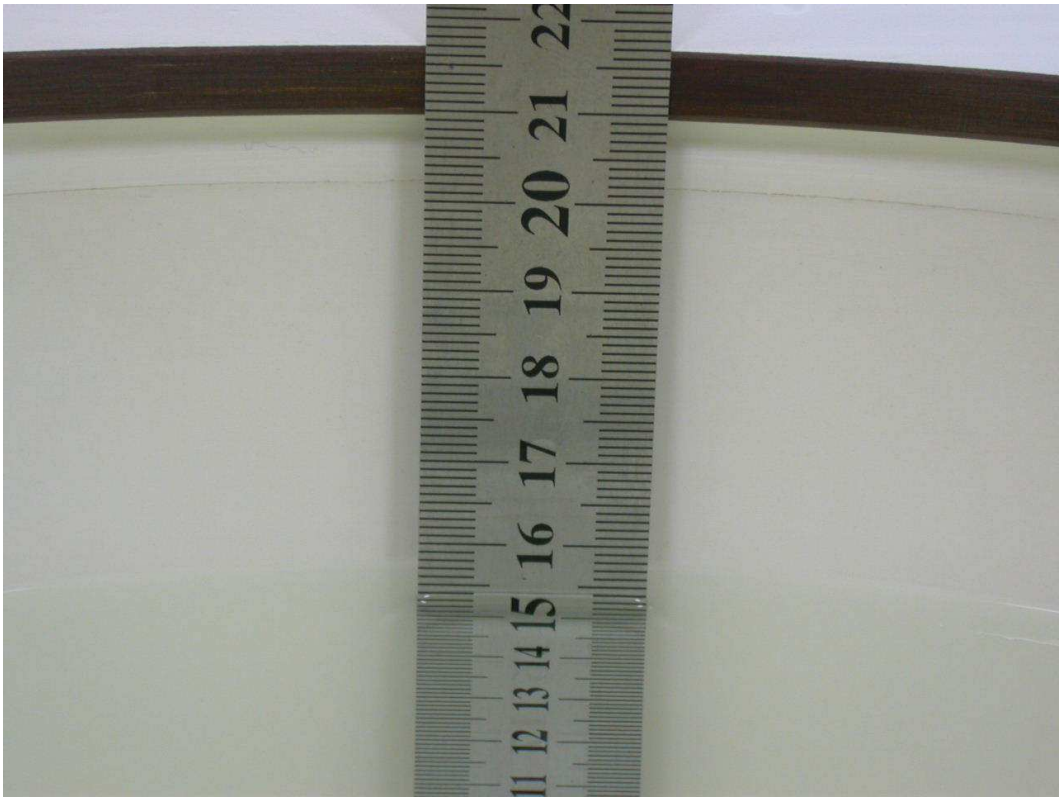

Tissue MSL2600MHz D=152mm

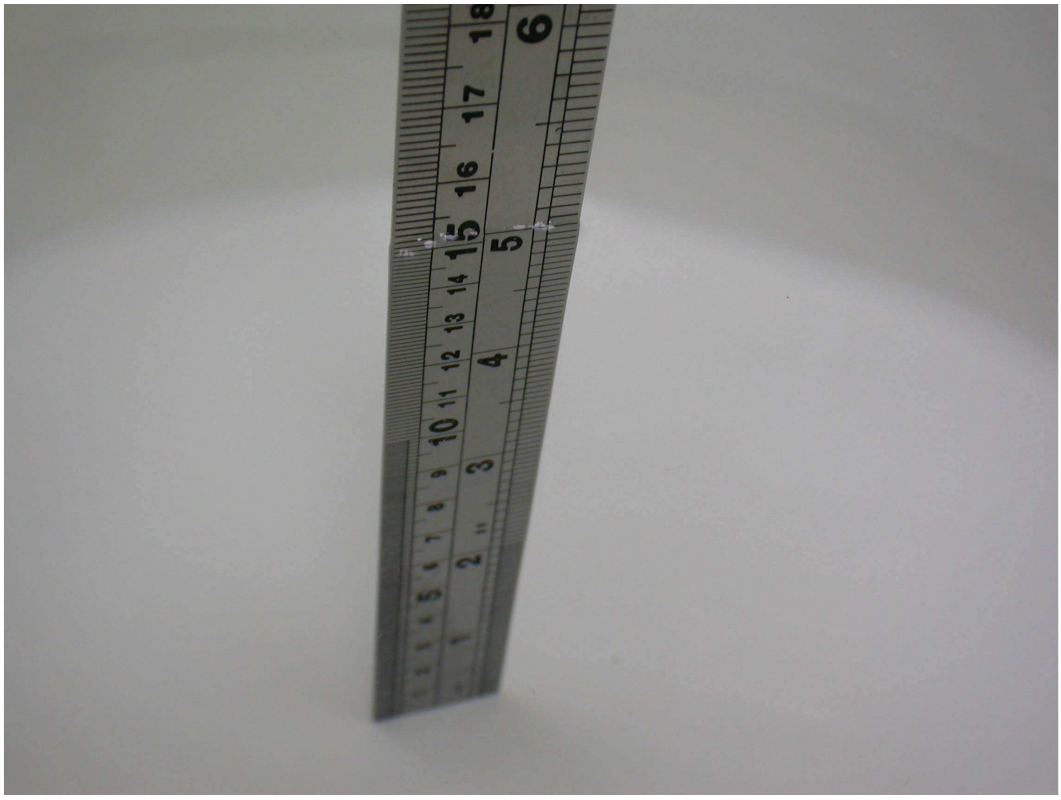

Tissue MSL2600MHz D=151mm

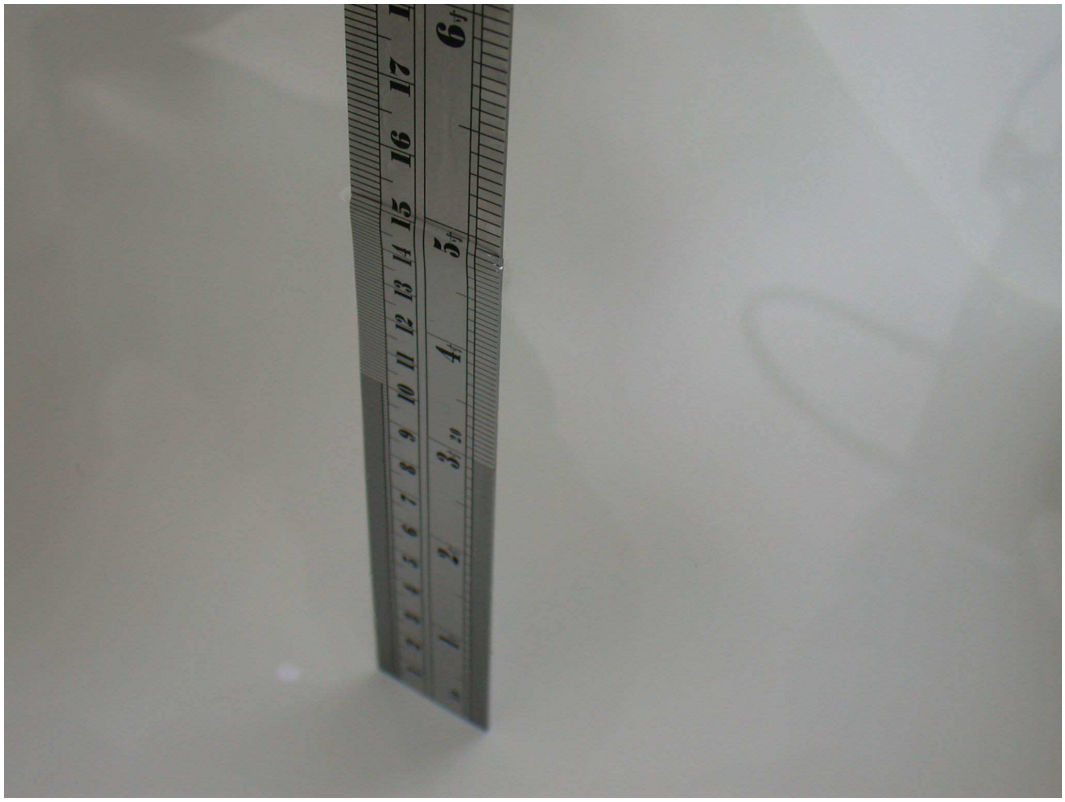

M01-Horizontal up-5M- 64QAM1_2-Ant 1

DUT: WIMAX USB Dongle ; Type: WU202
Communication System: Wimax_2.6GHz 5M WU-202 ; Frequency: 2498.5 MHz ; Duty Cycle: 1:3.2 ; Modulation type: 64QAM
Medium: MSL2450 Medium parameters used: f = 2498.5 MHz; σ = 1.97 mho/m; ε_r = 53.5; ρ = 1000 kg/m^3
Phantom section: Flat Section ; Separation distance : 5 mm (The Horizontal up side of the EUT to the Phantom)

DASY4 Configuration:
- Probe: EX3DV4 - SN3590 ; ConvF(8.2, 8.2, 8.2) ; Calibrated: 2010/3/25
- Sensor-Surface: 2mm (Mechanical Surface Detection)
- Electronics: DAE4 Sn861 ; Calibrated: 2010/1/22
- Phantom: SAM 12 ; Type: SAM V4.0 ; Serial: TP 1202
- Measurement SW: DASY4, V4.7 Build 80 ; Postprocessing SW: SEMCAD, V1.8 Build 186

Low Channel/Area Scan (9x20x1): Measurement grid: dx=5mm, dy=5mm
Maximum value of SAR (measured) = 0.618 mW/g

Low Channel/Zoom Scan (7x7x9)/Cube 0: Measurement grid: dx=5mm, dy=5mm, dz=3mm
Reference Value = 15.7 V/m; Power Drift = -0.105 dB
Peak SAR (extrapolated) = 0.958 W/kg
SAR(1 g) = 0.477 mW/g; SAR(10 g) = 0.247 mW/g
Maximum value of SAR (measured) = 0.608 mW/g

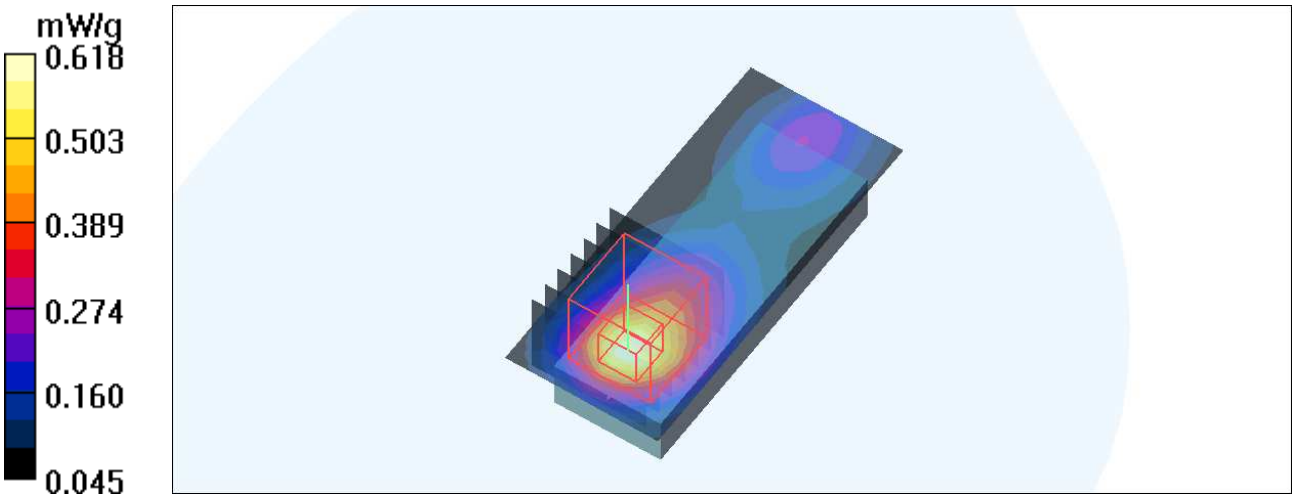

M01-Horizontal up-5M- 64QAM1_2-Ant 1

DUT: WIMAX USB Dongle ; Type: WU202
Communication System: Wimax_2.6GHz 5M WU-202 ; Frequency: 2593 MHz ; Duty Cycle: 1:3.2 ; Modulation type: 64QAM
Medium: MSL2600 Medium parameters used: f = 2593 MHz; σ = 2.13 mho/m; ε_r = 52.6; ρ = 1000 kg/m^3
Phantom section: Flat Section ; Separation distance : 5 mm (The Horizontal up side of the EUT to the Phantom)

DASY4 Configuration:
- Probe: EX3DV4 - SN3590 ; ConvF(8.04, 8.04, 8.04) ; Calibrated: 2010/3/25
- Sensor-Surface: 2mm (Mechanical Surface Detection)
- Electronics: DAE4 Sn861 ; Calibrated: 2010/1/22
- Phantom: SAM 12 ; Type: SAM V4.0 ; Serial: TP 1202
- Measurement SW: DASY4, V4.7 Build 80 ; Postprocessing SW: SEMCAD, V1.8 Build 186

Mid Channel/Area Scan (9x20x1): Measurement grid: dx=5mm, dy=5mm
Maximum value of SAR (measured) = 0.884 mW/g

Mid Channel/Zoom Scan (7x7x9)/Cube 0: Measurement grid: dx=5mm, dy=5mm, dz=3mm
Reference Value = 16.0 V/m; Power Drift = -0.069 dB
Peak SAR (extrapolated) = 1.38 W/kg
SAR(1 g) = 0.670 mW/g; SAR(10 g) = 0.325 mW/g
Maximum value of SAR (measured) = 0.876 mW/g

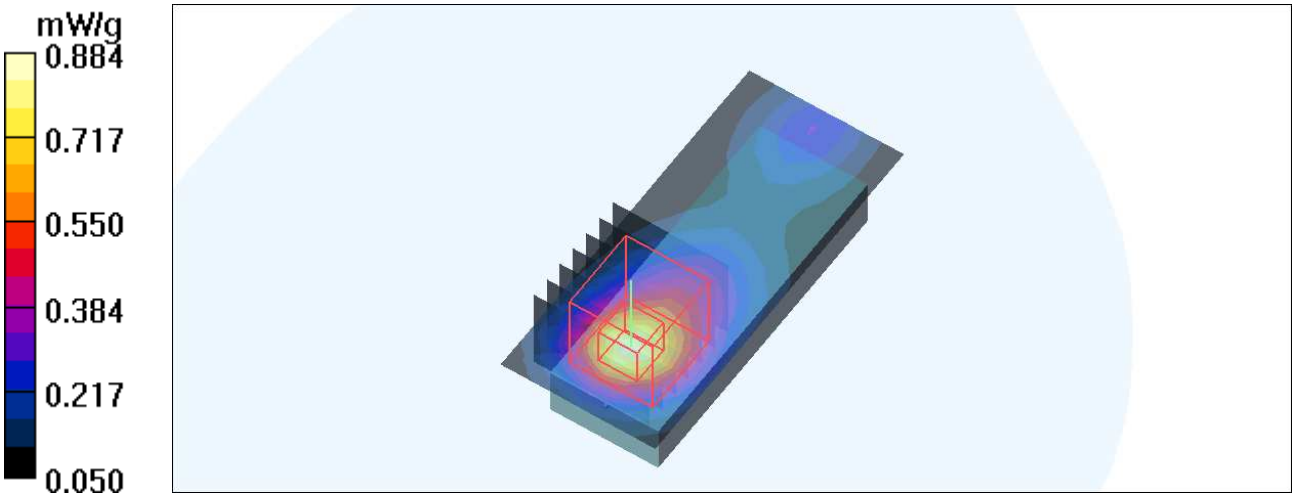

Test Laboratory: Bureau Veritas ADT

M01-Horizontal up-5M- 64QAM1_2-Ant 1

DUT: WIMAX USB Dongle ; Type: WU202
Communication System: Wimax_2.6GHz 5M WU-202 ; Frequency: 2687.5 MHz ; Duty Cycle: 1:3.2 ; Modulation type: 64QAM
Medium: MSL2600 Medium parameters used: f = 2687.5 MHz; σ = 2.26 mho/m; ε_r = 52; ρ = 1000 kg/m^3
Phantom section: Flat Section ; Separation distance : 5 mm (The Horizontal up side of the EUT to the Phantom)

DASY4 Configuration:
- Probe: EX3DV4 - SN3590 ; ConvF(8.04, 8.04, 8.04) ; Calibrated: 2010/3/25
- Sensor-Surface: 2mm (Mechanical Surface Detection)
- Electronics: DAE4 Sn861 ; Calibrated: 2010/1/22
- Phantom: SAM 12 ; Type: SAM V4.0 ; Serial: TP 1202
- Measurement SW: DASY4, V4.7 Build 80 ; Postprocessing SW: SEMCAD, V1.8 Build 186

High Channel/Area Scan (9x20x1): Measurement grid: dx=5mm, dy=5mm
Maximum value of SAR (measured) = 1.03 mW/g

High Channel/Zoom Scan(7x7x9)/Cube 0: Measurement grid: dx=5mm, dy=5mm, dz=3mm
Reference Value = 18.4 V/m; Power Drift = 0.076 dB
Peak SAR (extrapolated) = 1.69 W/kg
SAR(1 g) = 0.799 mW/g; SAR(10 g) = 0.385 mW/g
Maximum value of SAR (measured) = 1.05 mW/g

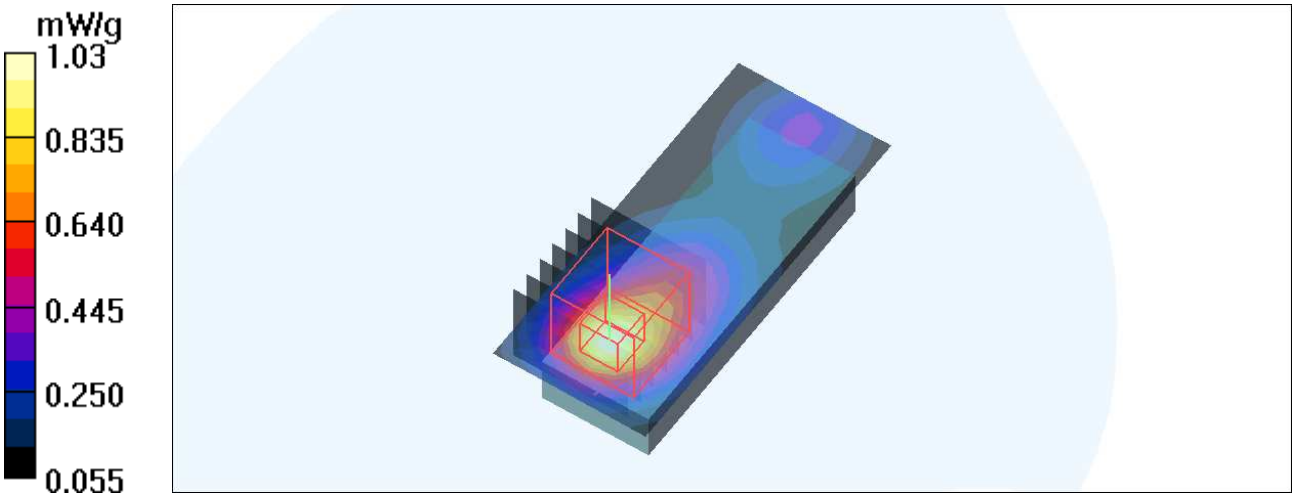

M02-Horizontal up-5M -16QAM1_2-Ant 1

DUT: WIMAX USB Dongle ; Type: WU202
Communication System: Wimax_2.6GHz 5M WU-202 ; Frequency: 2498.5 MHz ; Duty Cycle: 1:3.2 ; Modulation type: 16QAM
Medium: MSL2450 Medium parameters used: f = 2498.5 MHz; σ = 1.97 mho/m; ε_r = 53.5; ρ = 1000 kg/m^3
Phantom section: Flat Section ; Separation distance : 5 mm (The Horizontal up side of the EUT to the Phantom)

DASY4 Configuration:
- Probe: EX3DV4 - SN3590 ; ConvF(8.2, 8.2, 8.2) ; Calibrated: 2010/3/25
- Sensor-Surface: 2mm (Mechanical Surface Detection)
- Electronics: DAE4 Sn861 ; Calibrated: 2010/1/22
- Phantom: SAM 12 ; Type: SAM V4.0 ; Serial: TP 1202
- Measurement SW: DASY4, V4.7 Build 80 ; Postprocessing SW: SEMCAD, V1.8 Build 186

Low Channel/Area Scan (9x20x1): Measurement grid: dx=5mm, dy=5mm
Maximum value of SAR (measured) = 0.569 mW/g

Low Channel/Zoom Scan (7x7x9)/Cube 0: Measurement grid: dx=5mm, dy=5mm, dz=3mm
Reference Value = 11.9 V/m; Power Drift = -0.123 dB
Peak SAR (extrapolated) = 0.886 W/kg
SAR(1 g) = 0.441 mW/g; SAR(10 g) = 0.225 mW/g
Maximum value of SAR (measured) = 0.567 mW/g

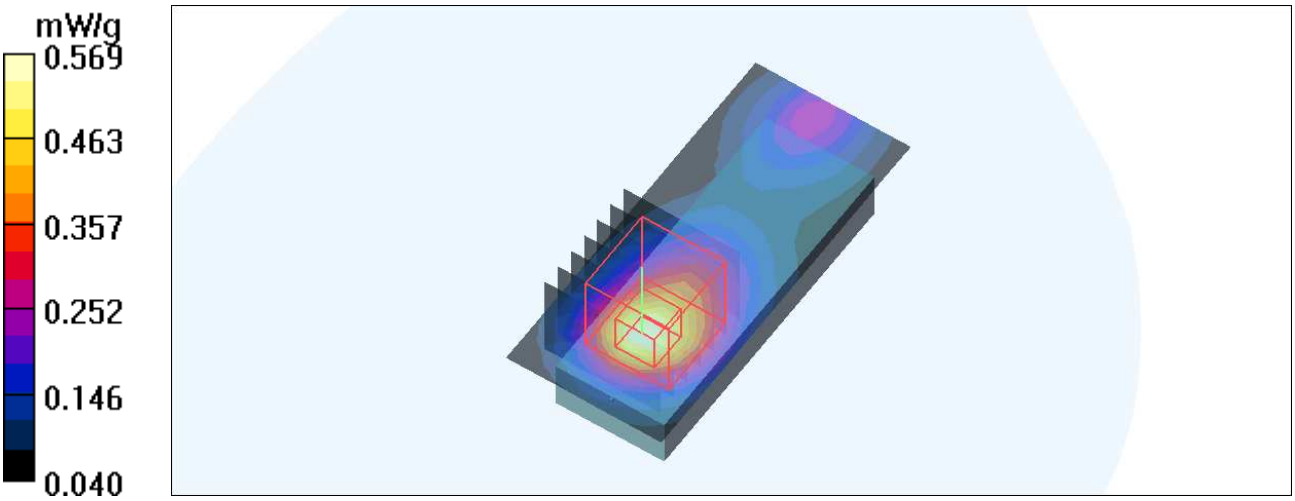

Test Laboratory: Bureau Veritas ADT

M02-Horizontal up-5M-16QAM1_2-Ant 1

DUT: WIMAX USB Dongle ; Type: WU202
Communication System: Wimax_2.6GHz 5M WU-202 ; Frequency: 2593 MHz ; Duty Cycle: 1:3.2 ; Modulation type: 16QAM
Medium: MSL2600 Medium parameters used: f = 2593 MHz; σ = 2.13 mho/m; ε_r = 52.6; ρ = 1000 kg/m^3
Phantom section: Flat Section ; Separation distance : 5 mm (The Horizontal up side of the EUT to the Phantom)

DASY4 Configuration:
- Probe: EX3DV4 - SN3590 ; ConvF(8.04, 8.04, 8.04) ; Calibrated: 2010/3/25
- Sensor-Surface: 2mm (Mechanical Surface Detection)
- Electronics: DAE4 Sn861 ; Calibrated: 2010/1/22
- Phantom: SAM 12 ; Type: SAM V4.0 ; Serial: TP 1202
- Measurement SW: DASY4, V4.7 Build 80 ; Postprocessing SW: SEMCAD, V1.8 Build 186

Mid Channel/Area Scan (9x20x1): Measurement grid: dx=5mm, dy=5mm
Maximum value of SAR (measured) = 0.796 mW/g

Mid Channel/Zoom Scan (7x7x9)/Cube 0: Measurement grid: dx=5mm, dy=5mm, dz=3mm
Reference Value = 13.8 V/m; Power Drift = -0.121 dB
Peak SAR (extrapolated) = 1.28 W/kg
SAR(1 g) = 0.610 mW/g; SAR(10 g) = 0.296 mW/g
Maximum value of SAR (measured) = 0.802 mW/g

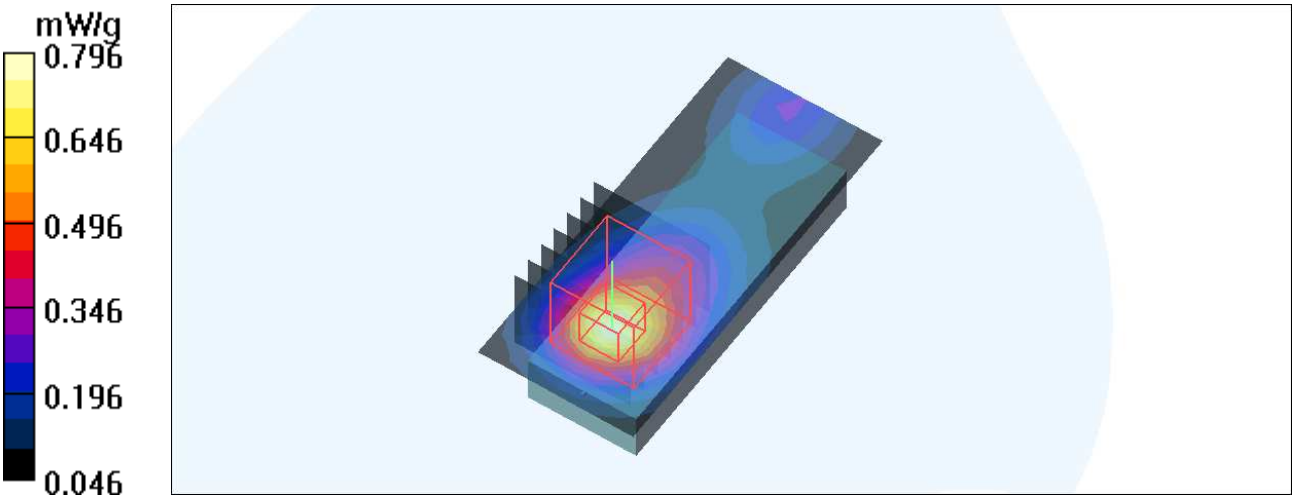

Test Laboratory: Bureau Veritas ADT

M02-Horizontal up-5M 16QAM1_2-Ant 1

DUT: WIMAX USB Dongle ; Type: WU202
Communication System: Wimax_2.6GHz 5M WU-202 ; Frequency: 2687.5 MHz ; Duty Cycle: 1:3.2 ; Modulation type: 16QAM
Medium: MSL2600 Medium parameters used: f = 2687.5 MHz; σ = 2.26 mho/m; ε_r = 52; ρ = 1000 kg/m^3
Phantom section: Flat Section ; Separation distance : 5 mm (The Horizontal up side of the EUT to the Phantom)

DASY4 Configuration:
- Probe: EX3DV4 - SN3590 ; ConvF(8.04, 8.04, 8.04) ; Calibrated: 2010/3/25
- Sensor-Surface: 2mm (Mechanical Surface Detection)
- Electronics: DAE4 Sn861 ; Calibrated: 2010/1/22
- Phantom: SAM 12 ; Type: SAM V4.0 ; Serial: TP 1202
- Measurement SW: DASY4, V4.7 Build 80 ; Postprocessing SW: SEMCAD, V1.8 Build 186

High Channel/Area Scan (9x20x1): Measurement grid: dx=5mm, dy=5mm
Maximum value of SAR (measured) = 1.00 mW/g

High Channel/Zoom Scan (7x7x9)/Cube 0: Measurement grid: dx=5mm, dy=5mm, dz=3mm
Reference Value = 17.3 V/m; Power Drift = 0.094 dB
Peak SAR (extrapolated) = 1.61 W/kg
SAR(1 g) = 0.761 mW/g; SAR(10 g) = 0.368 mW/g
Maximum value of SAR (measured) = 0.995 mW/g

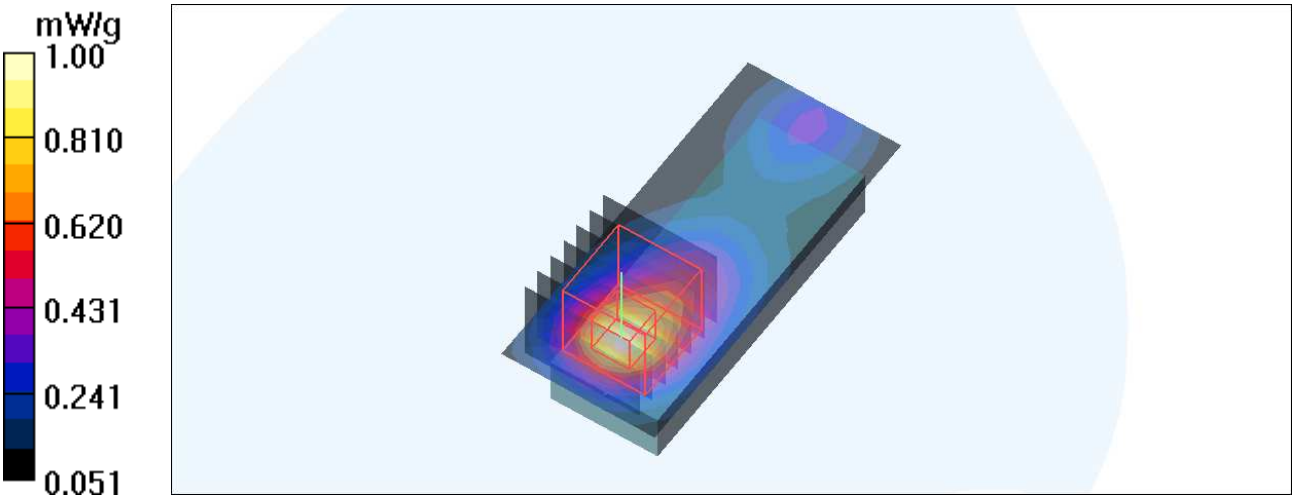

M03-Horizontal up-5M QPSK1_2-Ant 1

DUT: WIMAX USB Dongle ; Type: WU202
Communication System: Wimax_2.6GHz 5M WU-202 ; Frequency: 2498.5 MHz ; Duty Cycle: 1:3.2 ; Modulation type: QPSK
Medium: MSL2450 Medium parameters used: f = 2498.5 MHz; σ = 1.97 mho/m; ε_r = 53.5; ρ = 1000 kg/m^3
Phantom section: Flat Section ; Separation distance : 5 mm (The Horizontal up side of the EUT to the Phantom)

DASY4 Configuration:
- Probe: EX3DV4 - SN3590 ; ConvF(8.2, 8.2, 8.2) ; Calibrated: 2010/3/25
- Sensor-Surface: 2mm (Mechanical Surface Detection)
- Electronics: DAE4 Sn861 ; Calibrated: 2010/1/22
- Phantom: SAM 12 ; Type: SAM V4.0 ; Serial: TP 1202
- Measurement SW: DASY4, V4.7 Build 80 ; Postprocessing SW: SEMCAD, V1.8 Build 186

Low Channel/Area Scan (9x20x1): Measurement grid: dx=5mm, dy=5mm
Maximum value of SAR (measured) = 0.580 mW/g

Low Channel/Zoom Scan(7x7x9)/Cube 0: Measurement grid: dx=5mm, dy=5mm, dz=3mm
Reference Value = 12.2 V/m; Power Drift = -0.123 dB
Peak SAR (extrapolated) = 0.907 W/kg
SAR(1 g) = 0.447 mW/g; SAR(10 g) = 0.230 mW/g
Maximum value of SAR (measured) = 0.575 mW/g

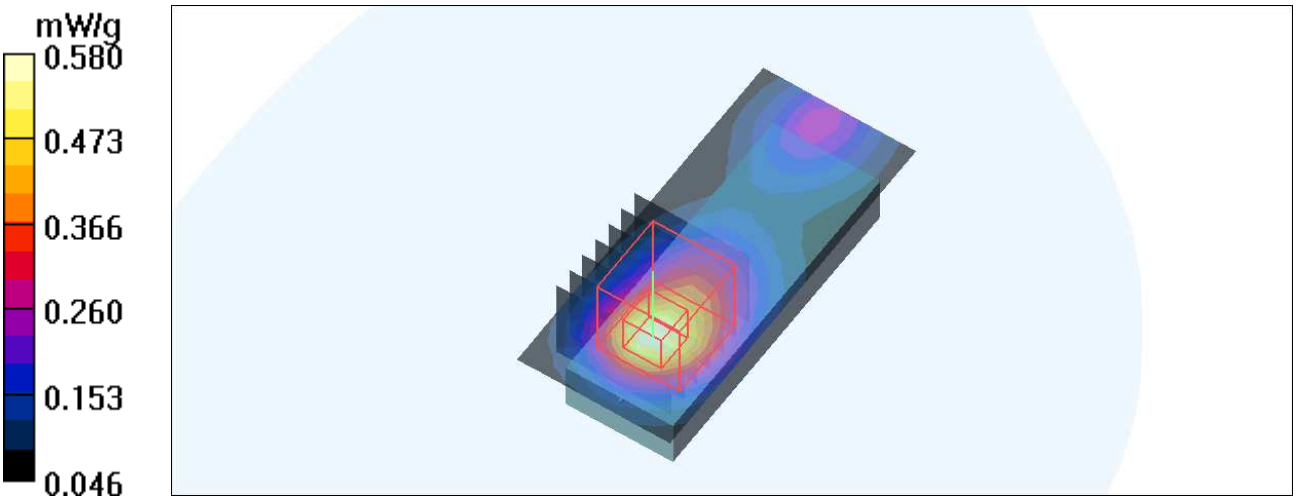

M03-Horizontal up-5M QPSK1_2-Ant 1

DUT: WIMAX USB Dongle ; Type: WU202
Communication System: Wimax_2.6GHz 5M WU-202 ; Frequency: 2593 MHz ; Duty Cycle: 1:3.2 ; Modulation type: QPSK
Medium: MSL2600 Medium parameters used: f = 2593 MHz; σ = 2.13 mho/m; ε_r = 52.6; ρ = 1000 kg/m^3
Phantom section: Flat Section ; Separation distance : 5 mm (The Horizontal up side of the EUT to the Phantom)

DASY4 Configuration:
- Probe: EX3DV4 - SN3590 ; ConvF(8.04, 8.04, 8.04) ; Calibrated: 2010/3/25
- Sensor-Surface: 2mm (Mechanical Surface Detection)
- Electronics: DAE4 Sn861 ; Calibrated: 2010/1/22
- Phantom: SAM 12 ; Type: SAM V4.0 ; Serial: TP 1202
- Measurement SW: DASY4, V4.7 Build 80 ; Postprocessing SW: SEMCAD, V1.8 Build 186

Mid Channel/Area Scan (9x20x1): Measurement grid: dx=5mm, dy=5mm
Maximum value of SAR (measured) = 0.955 mW/g

Mid Channel/Zoom Scan (7x7x9)/Cube 0: Measurement grid: dx=5mm, dy=5mm, dz=3mm
Reference Value = 15.2 V/m; Power Drift = -0.119 dB
Peak SAR (extrapolated) = 1.52 W/kg
SAR(1 g) = 0.723 mW/g; SAR(10 g) = 0.350 mW/g
Maximum value of SAR (measured) = 0.950 mW/g

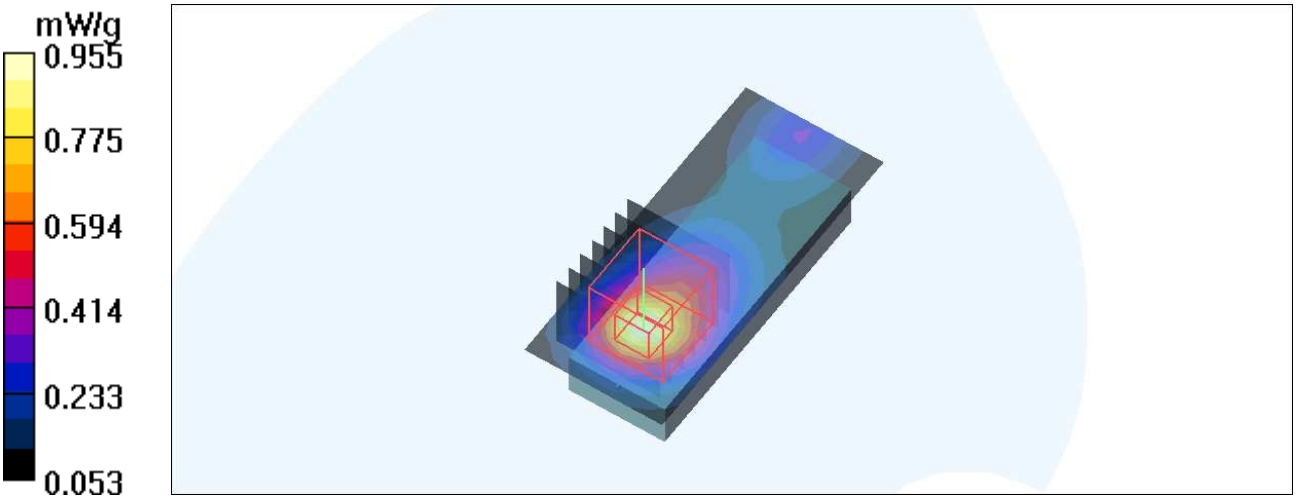

Test Laboratory: Bureau Veritas ADT

M03-Horizontal up-5M QPSK1_2-Ant 1

DUT: WIMAX USB Dongle ; Type: WU202
Communication System: Wimax_2.6GHz 5M WU-202 ; Frequency: 2687.5 MHz ; Duty Cycle: 1:3.2 ; Modulation type: QPSK
Medium: MSL2600 Medium parameters used: f = 2687.5 MHz; σ = 2.26 mho/m; ε_r = 52; ρ = 1000 kg/m^3
Phantom section: Flat Section ; Separation distance : 5 mm (The Horizontal up side of the EUT to the Phantom)

DASY4 Configuration:
- Probe: EX3DV4 - SN3590 ; ConvF(8.04, 8.04, 8.04) ; Calibrated: 2010/3/25
- Sensor-Surface: 2mm (Mechanical Surface Detection)
- Electronics: DAE4 Sn861 ; Calibrated: 2010/1/22
- Phantom: SAM 12 ; Type: SAM V4.0 ; Serial: TP 1202
- Measurement SW: DASY4, V4.7 Build 80 ; Postprocessing SW: SEMCAD, V1.8 Build 186

High Channel/Area Scan (9x20x1): Measurement grid: dx=5mm, dy=5mm
Maximum value of SAR (measured) = 0.884 mW/g

High Channel/Zoom Scan (7x7x9)/Cube 0: Measurement grid: dx=5mm, dy=5mm, dz=3mm
Reference Value = 13.9 V/m; Power Drift = -0.172 dB
Peak SAR (extrapolated) = 1.45 W/kg
SAR(1 g) = 0.682 mW/g; SAR(10 g) = 0.332 mW/g
Maximum value of SAR (measured) = 0.892 mW/g

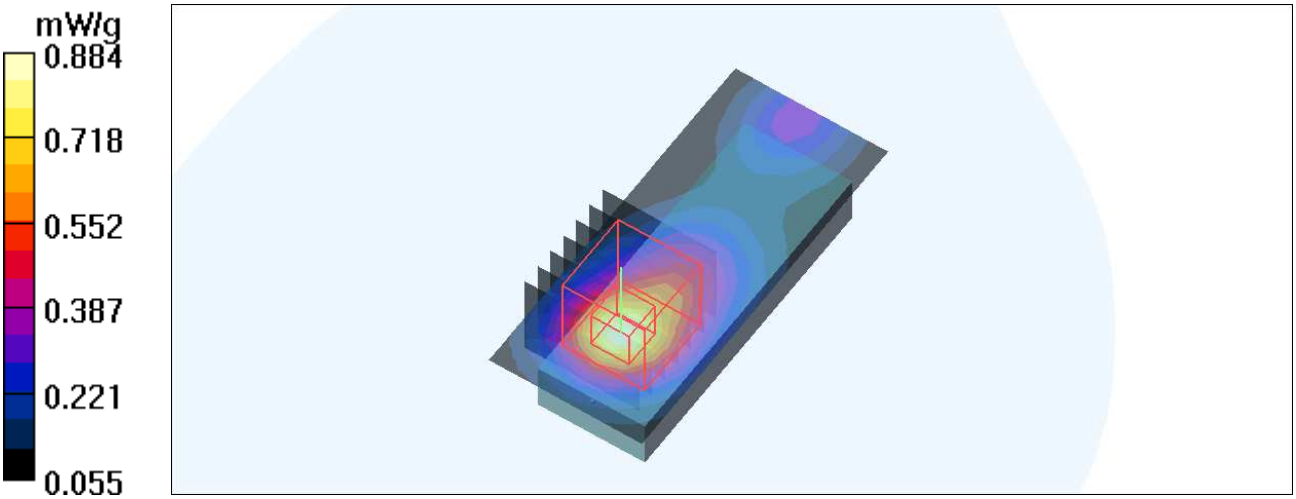

M04-Horizontal up-10M -64QAM1_2-Ant 1

DUT: WIMAX USB Dongle ; Type: WU202
Communication System: Wimax_2.6GHz 10M WU-202 ; Frequency: 2501 MHz ; Duty Cycle: 1:3.2 ; Modulation type: 64QAM
Medium: MSL2600 Medium parameters used: f = 2501 MHz; σ = 2.05 mho/m; ε_r = 52.8; ρ = 1000 kg/m^3
Phantom section: Flat Section ; Separation distance : 5 mm (The Horizontal up side of the EUT to the Phantom)

DASY4 Configuration:
- Probe: EX3DV4 - SN3590 ; ConvF(8.04, 8.04, 8.04) ; Calibrated: 2010/3/25
- Sensor-Surface: 2mm (Mechanical Surface Detection)
- Electronics: DAE4 Sn861 ; Calibrated: 2010/1/22
- Phantom: SAM 12 ; Type: SAM V4.0 ; Serial: TP 1202
- Measurement SW: DASY4, V4.7 Build 80 ; Postprocessing SW: SEMCAD, V1.8 Build 186

Low Channel/Area Scan (9x20x1): Measurement grid: dx=5mm, dy=5mm
Maximum value of SAR (measured) = 0.460 mW/g

Low Channel/Zoom Scan(7x7x9)/Cube 0: Measurement grid: dx=5mm, dy=5mm, dz=3mm
Reference Value = 10.9 V/m; Power Drift = -0.165 dB
Peak SAR (extrapolated) = 0.697 W/kg
SAR(1 g) = 0.353 mW/g; SAR(10 g) = 0.185 mW/g
Maximum value of SAR (measured) = 0.453 mW/g

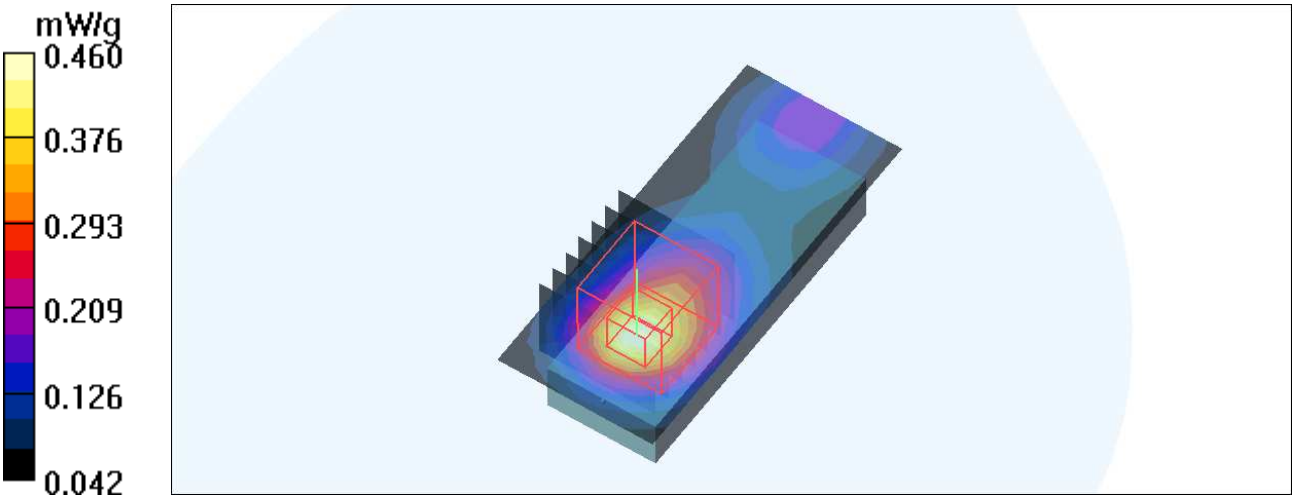

M04-Horizontal up-10M- 64QAM1_2-Ant 1

DUT: WIMAX USB Dongle ; Type: WU202
Communication System: Wimax_2.6GHz 10M WU-202 ; Frequency: 2593 MHz ; Duty Cycle: 1:3.2 ; Modulation type: 64QAM
Medium: MSL2600 Medium parameters used: f = 2593 MHz; σ = 2.13 mho/m; ε_r = 52.6; ρ = 1000 kg/m^3
Phantom section: Flat Section ; Separation distance : 5 mm (The Horizontal up side of the EUT to the Phantom)

DASY4 Configuration:
- Probe: EX3DV4 - SN3590 ; ConvF(8.04, 8.04, 8.04) ; Calibrated: 2010/3/25
- Sensor-Surface: 2mm (Mechanical Surface Detection)
- Electronics: DAE4 Sn861 ; Calibrated: 2010/1/22
- Phantom: SAM 12 ; Type: SAM V4.0 ; Serial: TP 1202
- Measurement SW: DASY4, V4.7 Build 80 ; Postprocessing SW: SEMCAD, V1.8 Build 186

Mid Channel/Area Scan (9x20x1): Measurement grid: dx=5mm, dy=5mm
Maximum value of SAR (measured) = 0.606 mW/g

Mid Channel/Zoom Scan(7x7x9)/Cube 0: Measurement grid: dx=5mm, dy=5mm, dz=3mm
Reference Value = 12.2 V/m; Power Drift = -0.172 dB
Peak SAR (extrapolated) = 0.938 W/kg
SAR(1 g) = 0.456 mW/g; SAR(10 g) = 0.227 mW/g
Maximum value of SAR (measured) = 0.598 mW/g

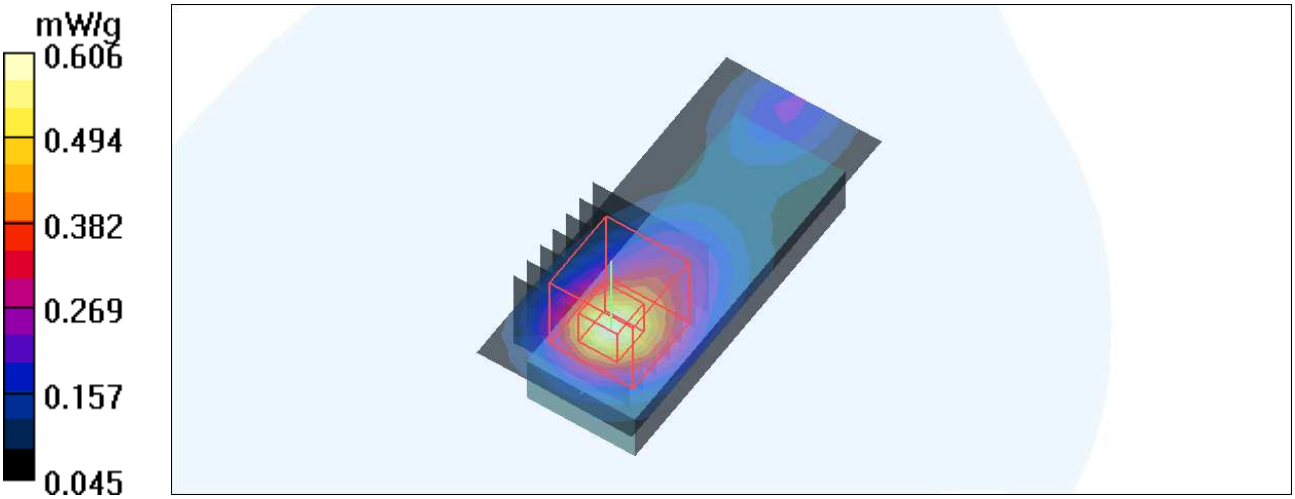

Test Laboratory: Bureau Veritas ADT

M04-Horizontal up-10M -64QAM1_2-Ant 1

DUT: WIMAX USB Dongle ; Type: WU202
Communication System: Wimax_2.6GHz 10M WU-202 ; Frequency: 2685 MHz ; Duty Cycle: 1:3.2 ; Modulation type: 64QAM
Medium: MSL2600 Medium parameters used: f = 2685 MHz; σ = 2.24 mho/m; ε_r = 52.1; ρ = 1000 kg/m^3
Phantom section: Flat Section ; Separation distance : 5 mm (The Horizontal up side of the EUT to the Phantom)

DASY4 Configuration:
- Probe: EX3DV4 - SN3590 ; ConvF(8.04, 8.04, 8.04) ; Calibrated: 2010/3/25
- Sensor-Surface: 2mm (Mechanical Surface Detection)
- Electronics: DAE4 Sn861 ; Calibrated: 2010/1/22
- Phantom: SAM 12 ; Type: SAM V4.0 ; Serial: TP 1202
- Measurement SW: DASY4, V4.7 Build 80 ; Postprocessing SW: SEMCAD, V1.8 Build 186

High Channel/Area Scan (9x20x1): Measurement grid: dx=5mm, dy=5mm
Maximum value of SAR (measured) = 0.791 mW/g

High Channel/Zoom Scan (7x7x9)/Cube 0: Measurement grid: dx=5mm, dy=5mm, dz=3mm
Reference Value = 13.3 V/m; Power Drift = -0.158 dB
Peak SAR (extrapolated) = 1.29 W/kg
SAR(1 g) = 0.606 mW/g; SAR(10 g) = 0.297 mW/g
Maximum value of SAR (measured) = 0.795 mW/g

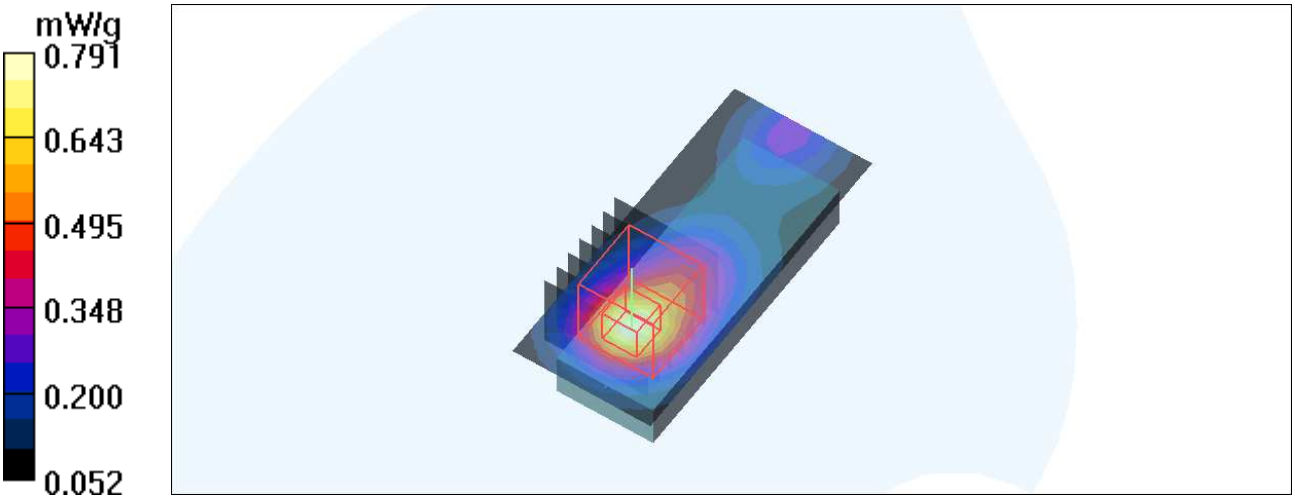

Date/Time: 2010/6/19 15:02:34

Test Laboratory: Bureau Veritas ADT

M05-Horizontal up-10M -16QAM1_2-Ant 1

DUT: WIMAX USB Dongle ; Type: WU202
Communication System: Wimax_2.6GHz 10M WU-202 ; Frequency: 2501 MHz ; Duty Cycle: 1:3.2 ; Modulation type: 16QAM
Medium: MSL2600 Medium parameters used: f = 2501 MHz; σ = 2.05 mho/m; ε_r = 52.8; ρ = 1000 kg/m^3
Phantom section: Flat Section ; Separation distance : 5 mm (The Horizontal up side of the EUT to the Phantom)

DASY4 Configuration:
- Probe: EX3DV4 - SN3590 ; ConvF(8.04, 8.04, 8.04) ; Calibrated: 2010/3/25
- Sensor-Surface: 2mm (Mechanical Surface Detection)
- Electronics: DAE4 Sn861 ; Calibrated: 2010/1/22
- Phantom: SAM 12 ; Type: SAM V4.0 ; Serial: TP 1202
- Measurement SW: DASY4, V4.7 Build 80 ; Postprocessing SW: SEMCAD, V1.8 Build 186

Low Channel/Area Scan (9x20x1): Measurement grid: dx=5mm, dy=5mm
Maximum value of SAR (measured) = 0.469 mW/g

Low Channel/Zoom Scan (7x7x9)/Cube 0: Measurement grid: dx=5mm, dy=5mm, dz=3mm
Reference Value = 10.8 V/m; Power Drift = -0.164 dB
Peak SAR (extrapolated) = 0.720 W/kg
SAR(1 g) = 0.363 mW/g; SAR(10 g) = 0.189 mW/g
Maximum value of SAR (measured) = 0.465 mW/g

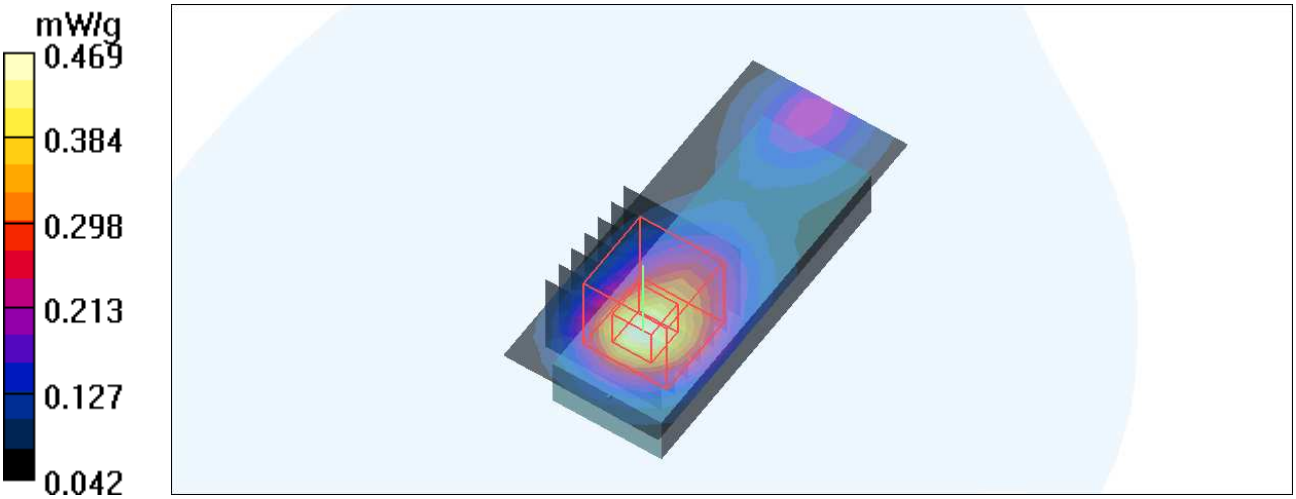

M05-Horizontal up-10M 16QAM1_2-Ant 1

DUT: WIMAX USB Dongle ; Type: WU202
Communication System: Wimax_2.6GHz 10M WU-202 ; Frequency: 2593 MHz ; Duty Cycle: 1:3.2 ; Modulation type: 16QAM
Medium: MSL2600 Medium parameters used: f = 2593 MHz; σ = 2.13 mho/m; ε_r = 52.6; ρ = 1000 kg/m^3
Phantom section: Flat Section ; Separation distance : 5 mm (The Horizontal up side of the EUT to the Phantom)

DASY4 Configuration:
- Probe: EX3DV4 - SN3590 ; ConvF(8.04, 8.04, 8.04) ; Calibrated: 2010/3/25
- Sensor-Surface: 2mm (Mechanical Surface Detection)
- Electronics: DAE4 Sn861 ; Calibrated: 2010/1/22
- Phantom: SAM 12 ; Type: SAM V4.0 ; Serial: TP 1202
- Measurement SW: DASY4, V4.7 Build 80 ; Postprocessing SW: SEMCAD, V1.8 Build 186

Mid Channel/Area Scan (9x20x1): Measurement grid: dx=5mm, dy=5mm
Maximum value of SAR (measured) = 0.642 mW/g

Mid Channel/Zoom Scan (7x7x9)/Cube 0: Measurement grid: dx=5mm, dy=5mm, dz=3mm
Reference Value = 12.4 V/m; Power Drift = -0.188 dB
Peak SAR (extrapolated) = 0.995 W/kg
SAR(1 g) = 0.485 mW/g; SAR(10 g) = 0.240 mW/g
Maximum value of SAR (measured) = 0.633 mW/g

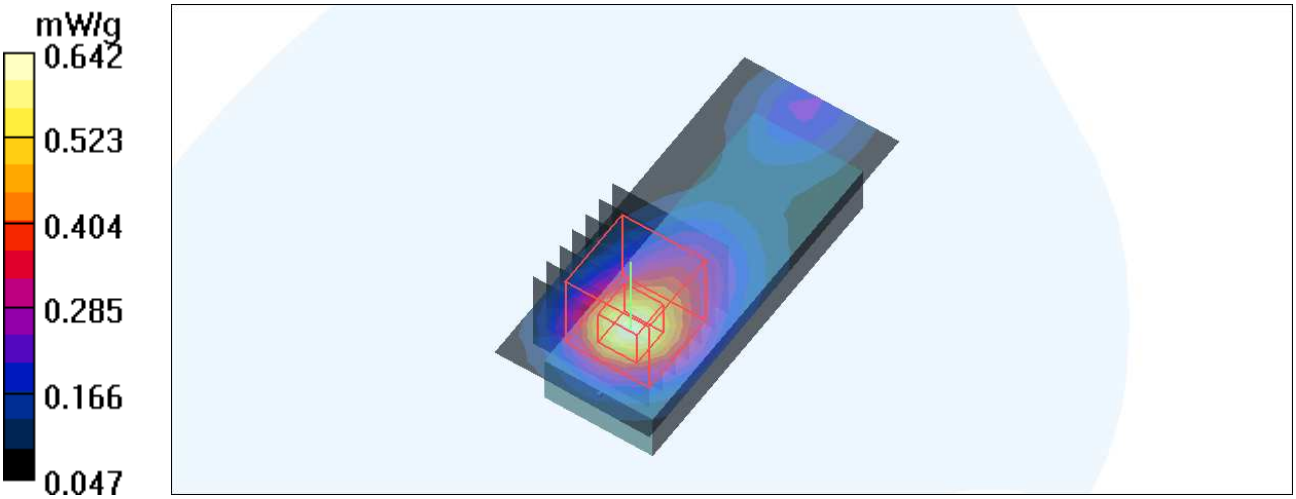

M05-Horizontal up-10M 16QAM1_2-Ant 1

DUT: WIMAX USB Dongle ; Type: WU202
Communication System: Wimax_2.6GHz 10M WU-202 ; Frequency: 2685 MHz ; Duty Cycle: 1:3.2 ; Modulation type: 16QAM
Medium: MSL2600 Medium parameters used: f = 2685 MHz; σ = 2.24 mho/m; ε_r = 52.1; ρ = 1000 kg/m^3
Phantom section: Flat Section ; Separation distance : 5 mm (The Horizontal up side of the EUT to the Phantom)

DASY4 Configuration:
- Probe: EX3DV4 - SN3590 ; ConvF(8.04, 8.04, 8.04) ; Calibrated: 2010/3/25
- Sensor-Surface: 2mm (Mechanical Surface Detection)
- Electronics: DAE4 Sn861 ; Calibrated: 2010/1/22
- Phantom: SAM 12 ; Type: SAM V4.0 ; Serial: TP 1202
- Measurement SW: DASY4, V4.7 Build 80 ; Postprocessing SW: SEMCAD, V1.8 Build 186

High Channel/Area Scan (9x20x1): Measurement grid: dx=5mm, dy=5mm
Maximum value of SAR (measured) = 0.826 mW/g

High Channel/Zoom Scan (7x7x9)/Cube 0: Measurement grid: dx=5mm, dy=5mm, dz=3mm
Reference Value = 13.6 V/m; Power Drift = -0.138 dB
Peak SAR (extrapolated) = 1.34 W/kg
SAR(1 g) = 0.635 mW/g; SAR(10 g) = 0.309 mW/g
Maximum value of SAR (measured) = 0.834 mW/g

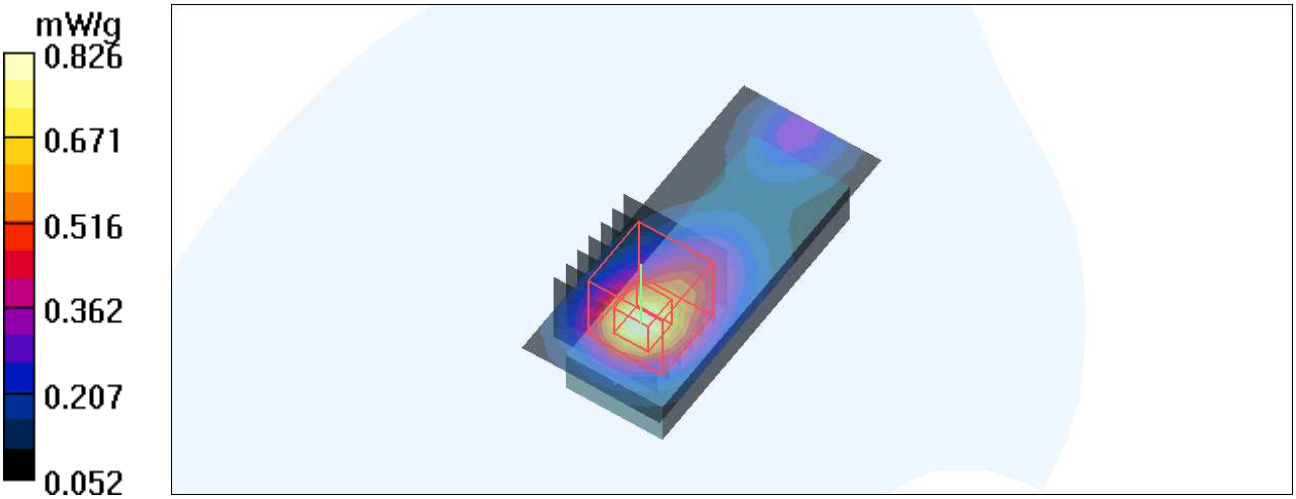

M06-Horizontal up-10M QPSK1_2-Ant 1

DUT: WIMAX USB Dongle ; Type: WU202
Communication System: Wimax_2.6GHz 10M WU-202 ; Frequency: 2501 MHz ; Duty Cycle: 1:3.2 ; Modulation type: QPSK
Medium: MSL2600 Medium parameters used: f = 2501 MHz; σ = 2.05 mho/m; ε_r = 52.8; ρ = 1000 kg/m^3
Phantom section: Flat Section ; Separation distance : 5 mm (The Horizontal up side of the EUT to the Phantom)

DASY4 Configuration:
- Probe: EX3DV4 - SN3590 ; ConvF(8.04, 8.04, 8.04) ; Calibrated: 2010/3/25
- Sensor-Surface: 2mm (Mechanical Surface Detection)
- Electronics: DAE4 Sn861 ; Calibrated: 2010/1/22
- Phantom: SAM 12 ; Type: SAM V4.0 ; Serial: TP 1202
- Measurement SW: DASY4, V4.7 Build 80 ; Postprocessing SW: SEMCAD, V1.8 Build 186

Low Channel/Area Scan (9x20x1): Measurement grid: dx=5mm, dy=5mm
Maximum value of SAR (measured) = 0.476 mW/g

Low Channel/Zoom Scan (7x7x9)/Cube 0: Measurement grid: dx=5mm, dy=5mm, dz=3mm
Reference Value = 10.9 V/m; Power Drift = -0.189 dB
Peak SAR (extrapolated) = 0.715 W/kg
SAR(1 g) = 0.366 mW/g; SAR(10 g) = 0.191 mW/g
Maximum value of SAR (measured) = 0.468 mW/g

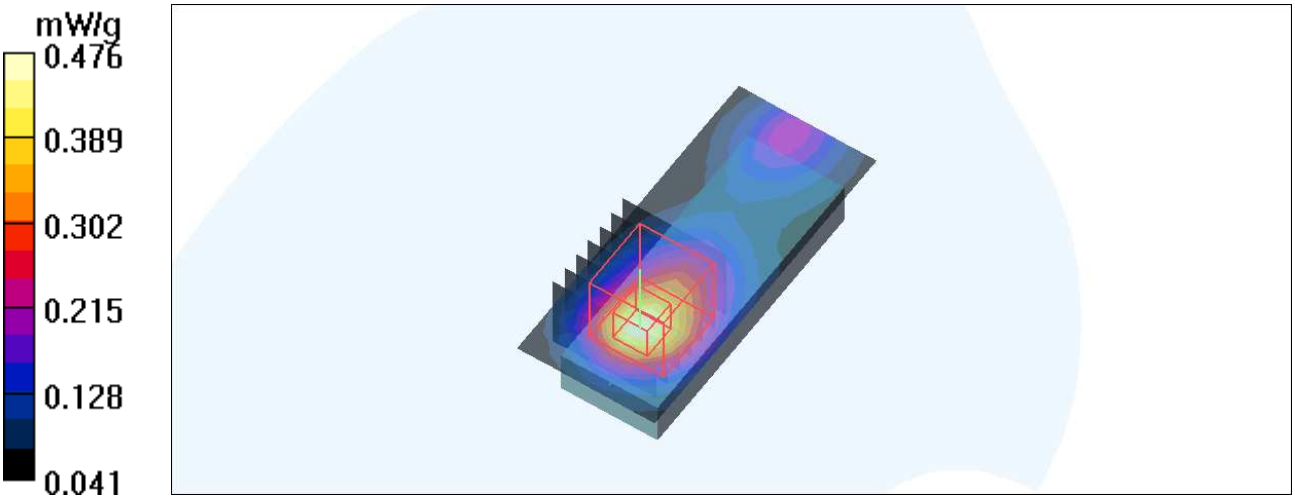

Test Laboratory: Bureau Veritas ADT

M06-Horizontal up-10M- QPSK1_2-Ant 1

DUT: WIMAX USB Dongle ; Type: WU202
Communication System: Wimax_2.6GHz 10M WU-202 ; Frequency: 2593 MHz ; Duty Cycle: 1:3.2 ; Modulation type: QPSK
Medium: MSL2600 Medium parameters used: f = 2593 MHz; σ = 2.13 mho/m; ε_r = 52.6; ρ = 1000 kg/m^3
Phantom section: Flat Section ; Separation distance : 5 mm (The Horizontal up side of the EUT to the Phantom)

DASY4 Configuration:
- Probe: EX3DV4 - SN3590 ; ConvF(8.04, 8.04, 8.04) ; Calibrated: 2010/3/25
- Sensor-Surface: 2mm (Mechanical Surface Detection)
- Electronics: DAE4 Sn861 ; Calibrated: 2010/1/22
- Phantom: SAM 12 ; Type: SAM V4.0 ; Serial: TP 1202
- Measurement SW: DASY4, V4.7 Build 80 ; Postprocessing SW: SEMCAD, V1.8 Build 186

Mid Channel/Area Scan (9x20x1): Measurement grid: dx=5mm, dy=5mm
Maximum value of SAR (measured) = 0.637 mW/g

Mid Channel/Zoom Scan(7x7x9)/Cube 0: Measurement grid: dx=5mm, dy=5mm, dz=3mm
Reference Value = 12.6 V/m; Power Drift = -0.154 dB
Peak SAR (extrapolated) = 0.988 W/kg
SAR(1 g) = 0.480 mW/g; SAR(10 g) = 0.238 mW/g
Maximum value of SAR (measured) = 0.625 mW/g

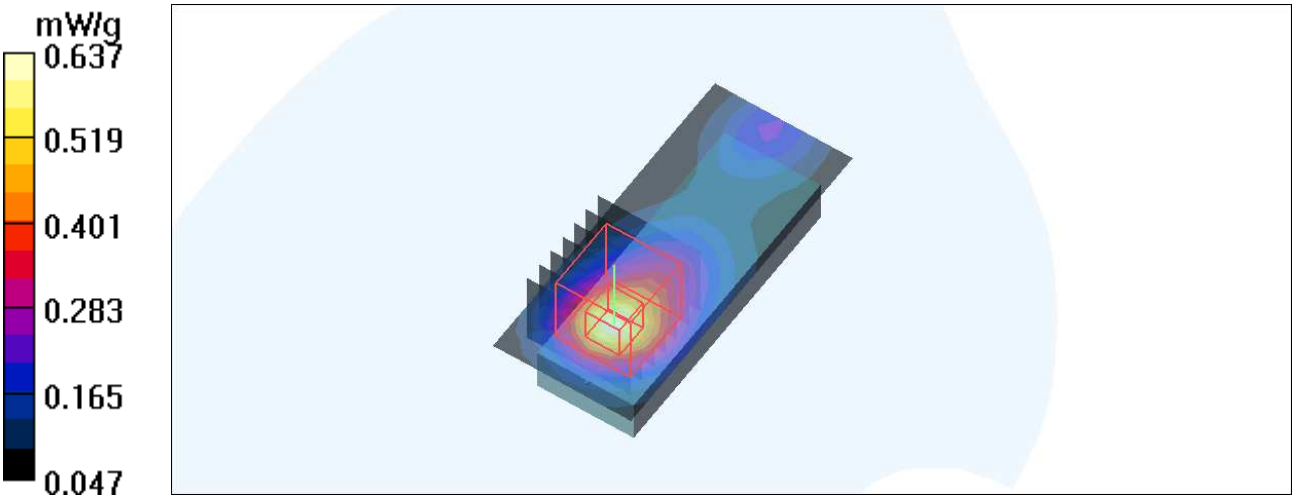

M06-Horizontal up-10M -QPSK1_2-Ant 1

DUT: WIMAX USB Dongle ; Type: WU202
Communication System: Wimax_2.6GHz 10M WU-202 ; Frequency: 2685 MHz ; Duty Cycle: 1:3.2 ; Modulation type: 64QAM
Medium: MSL2600 Medium parameters used: f = 2685 MHz; σ = 2.24 mho/m; ε_r = 52.1; ρ = 1000 kg/m^3
Phantom section: Flat Section ; Separation distance : 5 mm (The Horizontal up side of the EUT to the Phantom)

DASY4 Configuration:
- Probe: EX3DV4 - SN3590 ; ConvF(8.04, 8.04, 8.04) ; Calibrated: 2010/3/25
- Sensor-Surface: 2mm (Mechanical Surface Detection)
- Electronics: DAE4 Sn861 ; Calibrated: 2010/1/22
- Phantom: SAM 12 ; Type: SAM V4.0 ; Serial: TP 1202
- Measurement SW: DASY4, V4.7 Build 80 ; Postprocessing SW: SEMCAD, V1.8 Build 186

High Channel/Area Scan (9x20x1): Measurement grid: dx=5mm, dy=5mm
Maximum value of SAR (measured) = 0.805 mW/g

High Channel/Zoom Scan (7x7x9)/Cube 0: Measurement grid: dx=5mm, dy=5mm, dz=3mm
Reference Value = 13.4 V/m; Power Drift = -0.155 dB
Peak SAR (extrapolated) = 1.30 W/kg
SAR(1 g) = 0.614 mW/g; SAR(10 g) = 0.300 mW/g
Maximum value of SAR (measured) = 0.806 mW/g

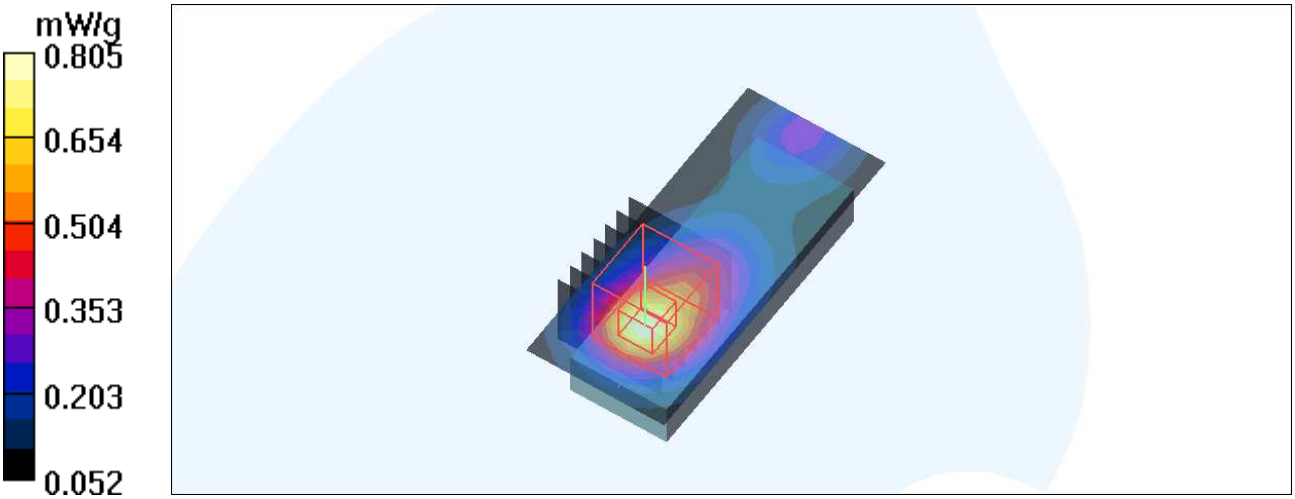

M07-Horizontal down-5M -64QAM1_2-Ant 1

DUT: WIMAX USB Dongle ; Type: WU202
Communication System: Wimax_2.6GHz 5M WU-202 ; Frequency: 2498.5 MHz ; Duty Cycle: 1:3.2 ; Modulation type: 64QAM
Medium: MSL2450 Medium parameters used: f = 2498.5 MHz; σ = 1.96 mho/m; ε_r = 53.6; ρ = 1000 kg/m^3
Phantom section: Flat Section ; Separation distance : 5 mm (The Horizontal down side of the EUT to the Phantom)

DASY4 Configuration:
- Probe: EX3DV4 - SN3590 ; ConvF(8.2, 8.2, 8.2) ; Calibrated: 2010/3/25
- Sensor-Surface: 2mm (Mechanical Surface Detection)
- Electronics: DAE4 Sn861 ; Calibrated: 2010/1/22
- Phantom: SAM 12 ; Type: SAM V4.0 ; Serial: TP 1202
- Measurement SW: DASY4, V4.7 Build 80 ; Postprocessing SW: SEMCAD, V1.8 Build 186

Low Channel/Area Scan (9x20x1): Measurement grid: dx=5mm, dy=5mm
Maximum value of SAR (measured) = 0.754 mW/g

Low Channel/Zoom Scan(7x7x9)/Cube 0: Measurement grid: dx=5mm, dy=5mm, dz=3mm
Reference Value = 16.0 V/m; Power Drift = -0.095 dB
Peak SAR (extrapolated) = 1.27 W/kg
SAR(1 g) = 0.619 mW/g; SAR(10 g) = 0.309 mW/g
Maximum value of SAR (measured) = 0.804 mW/g

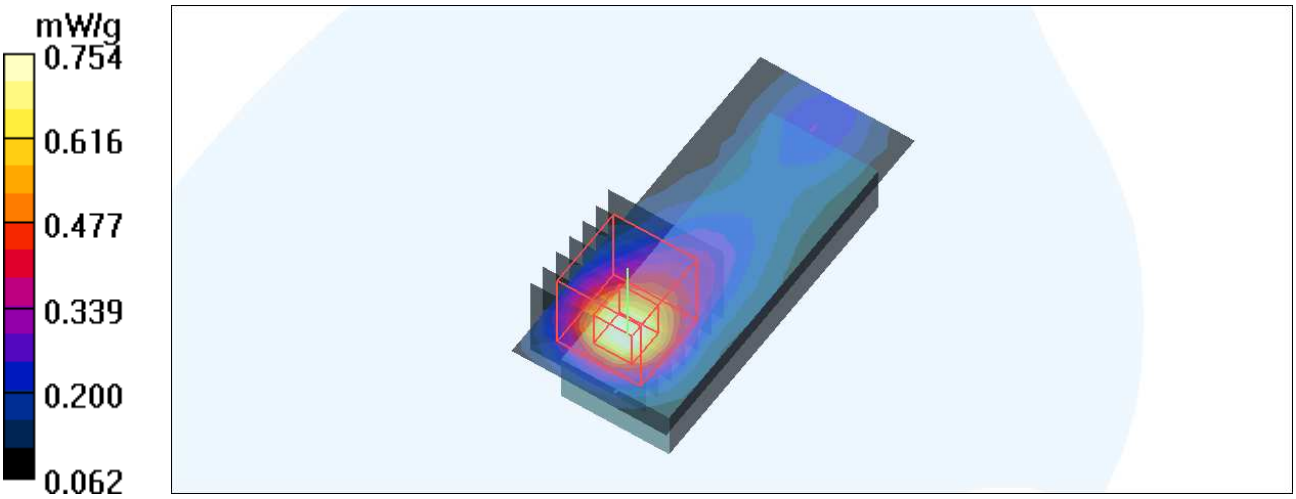

M07-Horizontal down-5M- 64QAM1_2-Ant 1

DUT: WIMAX USB Dongle ; Type: WU202
Communication System: Wimax_2.6GHz 5M WU-202 ; Frequency: 2593 MHz ; Duty Cycle: 1:3.2 ; Modulation type: 64QAM
Medium: MSL2600 Medium parameters used: f = 2593 MHz; σ = 2.14 mho/m; ε_r = 52.7; ρ = 1000 kg/m^3
Phantom section: Flat Section ; Separation distance : 5 mm (The Horizontal down side of the EUT to the Phantom)

DASY4 Configuration:
- Probe: EX3DV4 - SN3590 ; ConvF(8.04, 8.04, 8.04) ; Calibrated: 2010/3/25
- Sensor-Surface: 2mm (Mechanical Surface Detection)
- Electronics: DAE4 Sn861 ; Calibrated: 2010/1/22
- Phantom: SAM 12 ; Type: SAM V4.0 ; Serial: TP 1202
- Measurement SW: DASY4, V4.7 Build 80 ; Postprocessing SW: SEMCAD, V1.8 Build 186

Mid Channel/Area Scan (9x20x1): Measurement grid: dx=5mm, dy=5mm
Maximum value of SAR (measured) = 1.08 mW/g

Mid Channel/Zoom Scan(7x7x9)/Cube 0: Measurement grid: dx=5mm, dy=5mm, dz=3mm
Reference Value = 18.1 V/m; Power Drift = -0.023 dB
Peak SAR (extrapolated) = 1.77 W/kg
SAR(1 g) = 0.835 mW/g; SAR(10 g) = 0.399 mW/g
Maximum value of SAR (measured) = 1.11 mW/g

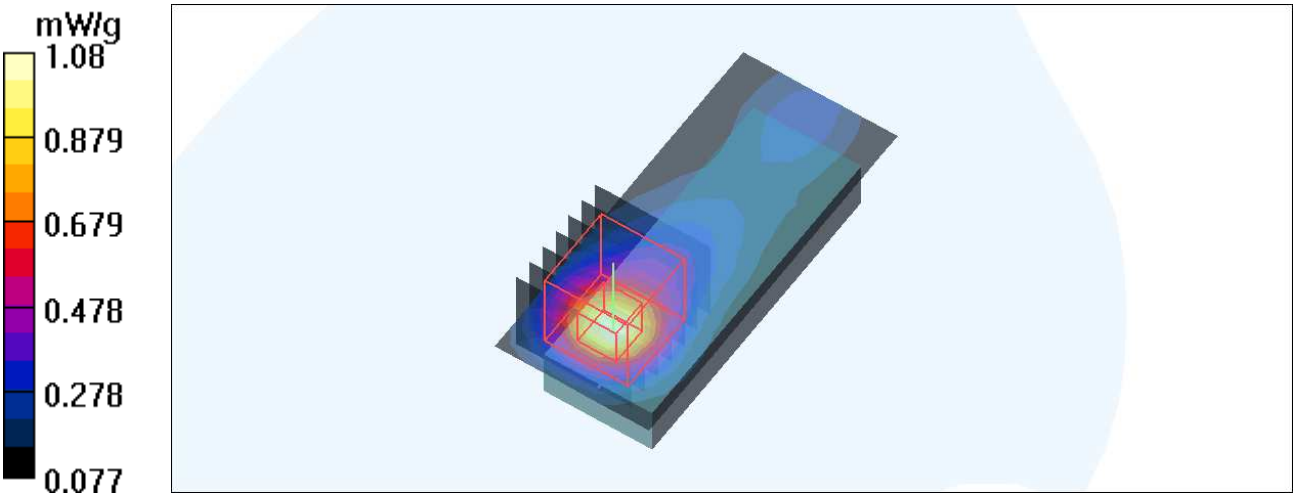

M07-Horizontal down-5M -64QAM1_2-Ant 1

DUT: WIMAX USB Dongle ; Type: WU202
Communication System: Wimax_2.6GHz 5M WU-202 ; Frequency: 2687.5 MHz ; Duty Cycle: 1:3.2 ; Modulation type: 64QAM
Medium: MSL2600 Medium parameters used: f = 2687.5 MHz; σ = 2.27 mho/m; ε_r = 52.1; ρ = 1000 kg/m^3
Phantom section: Flat Section ; Separation distance : 5 mm (The Horizontal down side of the EUT to the Phantom)

DASY4 Configuration:
- Probe: EX3DV4 - SN3590 ; ConvF(8.04, 8.04, 8.04) ; Calibrated: 2010/3/25
- Sensor-Surface: 2mm (Mechanical Surface Detection)
- Electronics: DAE4 Sn861 ; Calibrated: 2010/1/22
- Phantom: SAM 12 ; Type: SAM V4.0 ; Serial: TP 1202
- Measurement SW: DASY4, V4.7 Build 80 ; Postprocessing SW: SEMCAD, V1.8 Build 186

High Channel/Area Scan (9x20x1): Measurement grid: dx=5mm, dy=5mm
Maximum value of SAR (measured) = 1.18 mW/g

High Channel/Zoom Scan(7x7x9)/Cube 0: Measurement grid: dx=5mm, dy=5mm, dz=3mm
Reference Value = 19.9 V/m; Power Drift = 0.163 dB
Peak SAR (extrapolated) = 1.94 W/kg
SAR(1 g) = 0.91 mW/g; SAR(10 g) = 0.439 mW/g
Maximum value of SAR (measured) = 1.22 mW/g

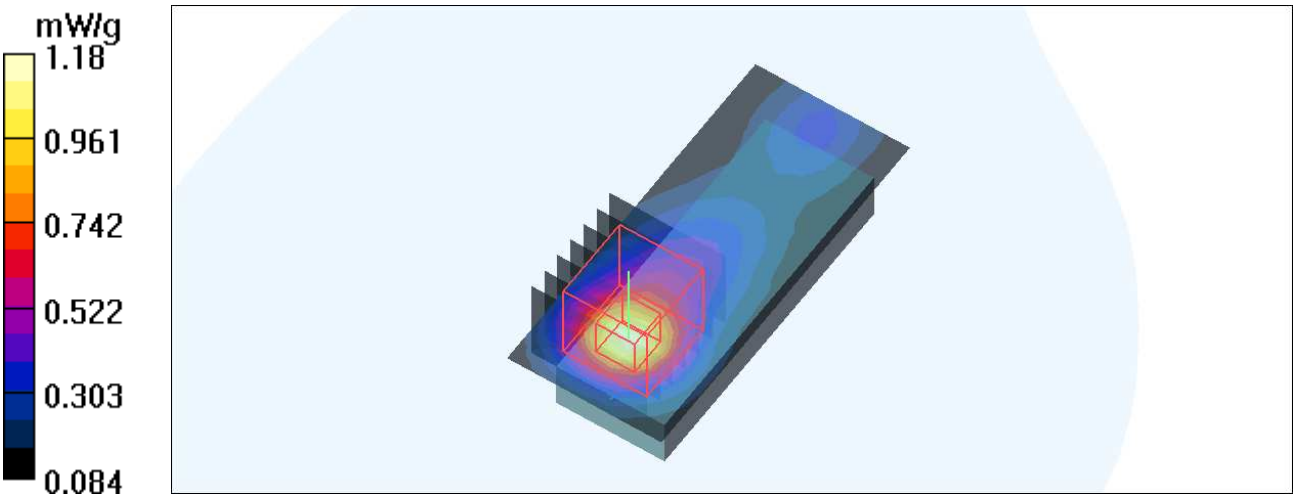

M08-Horizontal down-5M -16QAM1_2-Ant 1

DUT: WIMAX USB Dongle ; Type: WU202
Communication System: Wimax_2.6GHz 5M WU-202 ; Frequency: 2498.5 MHz ; Duty Cycle: 1:3.2 ; Modulation type: 16QAM
Medium: MSL2450 Medium parameters used: f = 2498.5 MHz; σ = 1.96 mho/m; ε_r = 53.6; ρ = 1000 kg/m^3
Phantom section: Flat Section ; Separation distance : 5 mm (The Horizontal down side of the EUT to the Phantom)

DASY4 Configuration:
- Probe: EX3DV4 - SN3590 ; ConvF(8.2, 8.2, 8.2) ; Calibrated: 2010/3/25
- Sensor-Surface: 2mm (Mechanical Surface Detection)
- Electronics: DAE4 Sn861 ; Calibrated: 2010/1/22
- Phantom: SAM 12 ; Type: SAM V4.0 ; Serial: TP 1202
- Measurement SW: DASY4, V4.7 Build 80 ; Postprocessing SW: SEMCAD, V1.8 Build 186

Low Channel/Area Scan (9x20x1): Measurement grid: dx=5mm, dy=5mm
Maximum value of SAR (measured) = 0.829 mW/g

Low Channel/Zoom Scan7x7x9)/Cube 0: Measurement grid: dx=5mm, dy=5mm, dz=3mm
Reference Value = 16.6 V/m; Power Drift = -0.164 dB
Peak SAR (extrapolated) = 1.39 W/kg
SAR(1 g) = 0.666 mW/g; SAR(10 g) = 0.330 mW/g
Maximum value of SAR (measured) = 0.872 mW/g

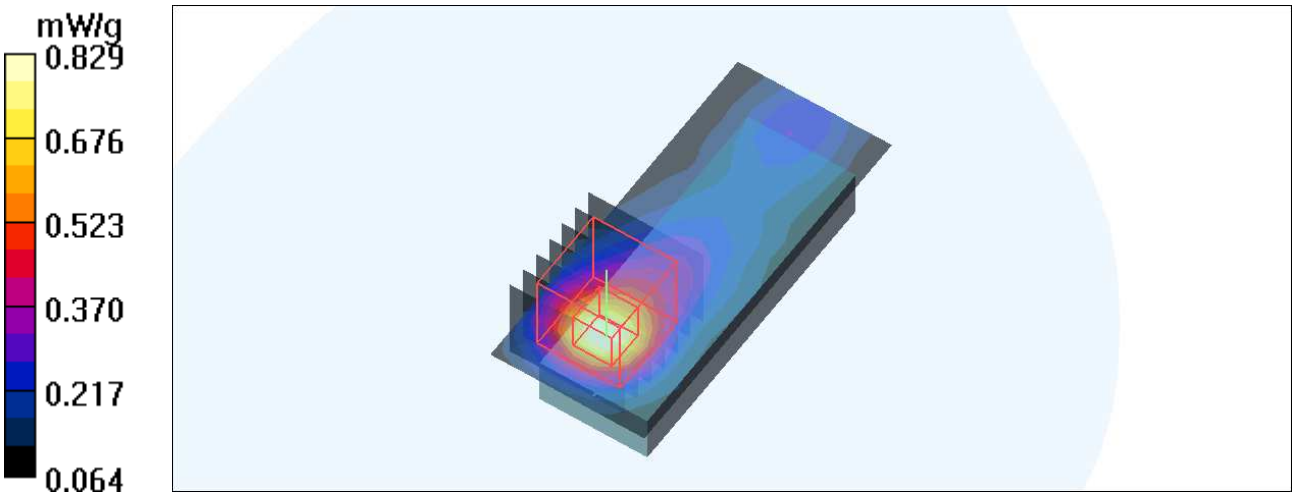

M08-Horizontal down-5M -16QAM1_2-Ant 1

DUT: WIMAX USB Dongle ; Type: WU202
Communication System: Wimax_2.6GHz 5M WU-202 ; Frequency: 2593 MHz ; Duty Cycle: 1:3.2 ; Modulation type: 16QAM
Medium: MSL2600 Medium parameters used: f = 2593 MHz; σ = 2.14 mho/m; ε_r = 52.7; ρ = 1000 kg/m^3
Phantom section: Flat Section ; Separation distance : 5 mm (The Horizontal down side of the EUT to the Phantom)

DASY4 Configuration:
- Probe: EX3DV4 - SN3590 ; ConvF(8.04, 8.04, 8.04) ; Calibrated: 2010/3/25
- Sensor-Surface: 2mm (Mechanical Surface Detection)
- Electronics: DAE4 Sn861 ; Calibrated: 2010/1/22
- Phantom: SAM 12 ; Type: SAM V4.0 ; Serial: TP 1202
- Measurement SW: DASY4, V4.7 Build 80 ; Postprocessing SW: SEMCAD, V1.8 Build 186

Mid Channel/Area Scan (9x20x1): Measurement grid: dx=5mm, dy=5mm
Maximum value of SAR (measured) = 1.18 mW/g

Mid Channel/Zoom Scan(7x7x9)/Cube 0: Measurement grid: dx=5mm, dy=5mm, dz=3mm
Reference Value = 18.9 V/m; Power Drift = -0.112 dB
Peak SAR (extrapolated) = 1.91 W/kg
SAR(1 g) = 0.899 mW/g; SAR(10 g) = 0.427 mW/g
Maximum value of SAR (measured) = 1.20 mW/g

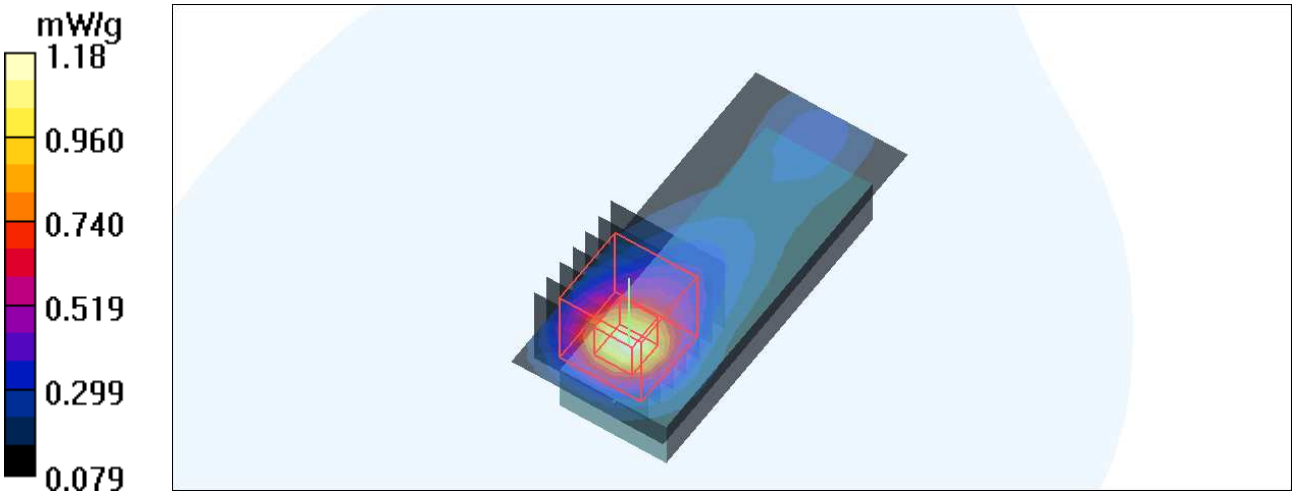

Test Laboratory: Bureau Veritas ADT

M08-Horizontal down-5M -16QAM1_2-Ant 1

DUT: WIMAX USB Dongle ; Type: WU202
Communication System: Wimax_2.6GHz 5M WU-202 ; Frequency: 2687.5 MHz ; Duty Cycle: 1:3.2 ; Modulation type: 16QAM
Medium: MSL2600 Medium parameters used: f = 2687.5 MHz; σ = 2.27 mho/m; ε_r = 52.1; ρ = 1000 kg/m^3
Phantom section: Flat Section ; Separation distance : 5 mm (The Horizontal down side of the EUT to the Phantom)

DASY4 Configuration:
- Probe: EX3DV4 - SN3590 ; ConvF(8.04, 8.04, 8.04) ; Calibrated: 2010/3/25
- Sensor-Surface: 2mm (Mechanical Surface Detection)
- Electronics: DAE4 Sn861 ; Calibrated: 2010/1/22
- Phantom: SAM 12 ; Type: SAM V4.0 ; Serial: TP 1202
- Measurement SW: DASY4, V4.7 Build 80 ; Postprocessing SW: SEMCAD, V1.8 Build 186

High Channel/Area Scan (9x20x1): Measurement grid: dx=5mm, dy=5mm
Maximum value of SAR (measured) = 1.44 mW/g

High Channel/Zoom Scan(7x7x9)/Cube 0: Measurement grid: dx=5mm, dy=5mm, dz=3mm
Reference Value = 19.6 V/m; Power Drift = -0.007 dB
Peak SAR (extrapolated) = 2.43 W/kg
SAR(1 g) = 1.1 mW/g; SAR(10 g) = 0.514 mW/g
Maximum value of SAR (measured) = 1.47 mW/g

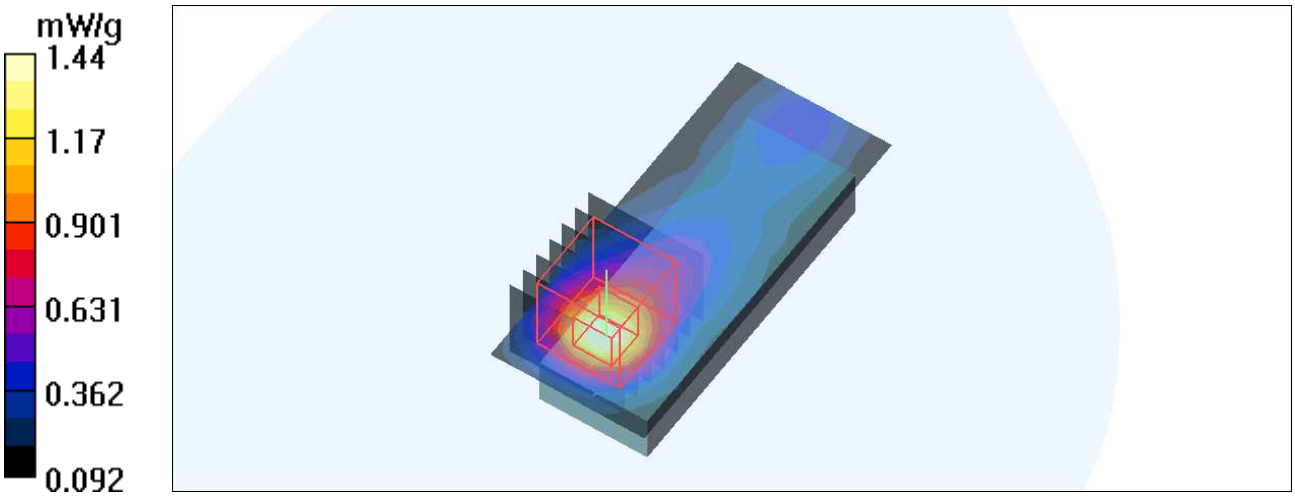

M09-Horizontal down-5M -QPSK1_2-Ant 1

DUT: WIMAX USB Dongle ; Type: WU202
Communication System: Wimax_2.6GHz 5M WU-202 ; Frequency: 2498.5 MHz ; Duty Cycle: 1:3.2 ; Modulation type: QPSK
Medium: MSL2450 Medium parameters used: f = 2498.5 MHz; σ = 1.96 mho/m; ε_r = 53.6; ρ = 1000 kg/m^3
Phantom section: Flat Section ; Separation distance : 5 mm (The Horizontal down side of the EUT to the Phantom)

DASY4 Configuration:
- Probe: EX3DV4 - SN3590 ; ConvF(8.2, 8.2, 8.2) ; Calibrated: 2010/3/25
- Sensor-Surface: 2mm (Mechanical Surface Detection)
- Electronics: DAE4 Sn861 ; Calibrated: 2010/1/22
- Phantom: SAM 12 ; Type: SAM V4.0 ; Serial: TP 1202
- Measurement SW: DASY4, V4.7 Build 80 ; Postprocessing SW: SEMCAD, V1.8 Build 186

Low Channel/Area Scan (9x20x1): Measurement grid: dx=5mm, dy=5mm
Maximum value of SAR (measured) = 0.811 mW/g

Low Channel/Zoom Scan(7x7x9)/Cube 0: Measurement grid: dx=5mm, dy=5mm, dz=3mm
Reference Value = 16.2 V/m; Power Drift = 0.032 dB
Peak SAR (extrapolated) = 1.36 W/kg
SAR(1 g) = 0.650 mW/g; SAR(10 g) = 0.323 mW/g
Maximum value of SAR (measured) = 0.856 mW/g

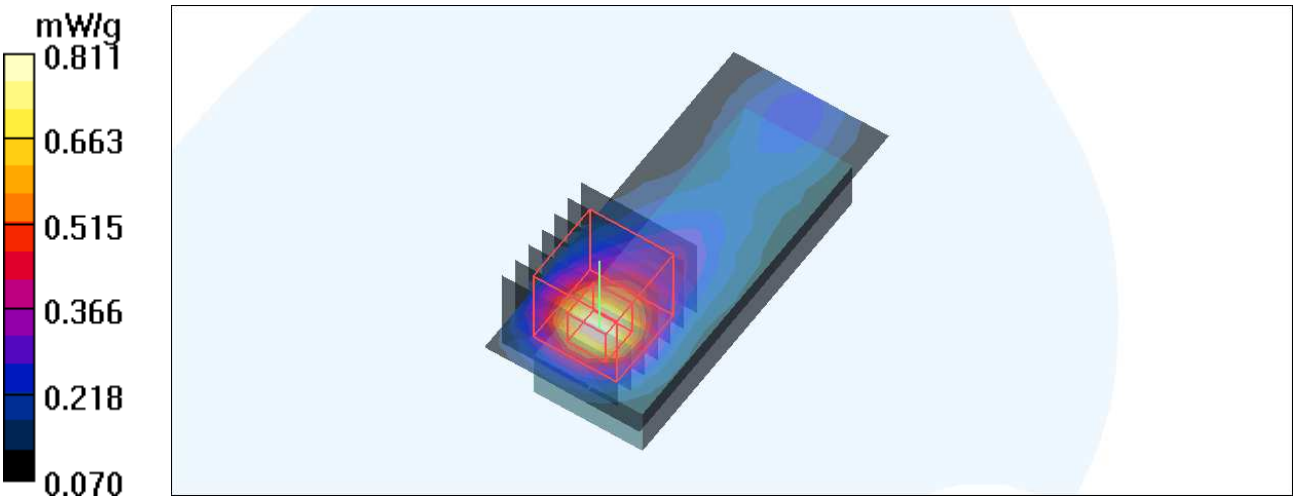

M09-Horizontal down-5M -QPSK1_2-Ant 1

DUT: WIMAX USB Dongle ; Type: WU202
Communication System: Wimax_2.6GHz 5M WU-202 ; Frequency: 2593 MHz ; Duty Cycle: 1:3.2 ; Modulation type: QPSK
Medium: MSL2600 Medium parameters used: f = 2593 MHz; σ = 2.14 mho/m; ε_r = 52.7; ρ = 1000 kg/m^3
Phantom section: Flat Section ; Separation distance : 5 mm (The Horizontal down side of the EUT to the Phantom)

DASY4 Configuration:
- Probe: EX3DV4 - SN3590 ; ConvF(8.04, 8.04, 8.04) ; Calibrated: 2010/3/25
- Sensor-Surface: 2mm (Mechanical Surface Detection)
- Electronics: DAE4 Sn861 ; Calibrated: 2010/1/22
- Phantom: SAM 12 ; Type: SAM V4.0 ; Serial: TP 1202
- Measurement SW: DASY4, V4.7 Build 80 ; Postprocessing SW: SEMCAD, V1.8 Build 186

Mid Channel/Area Scan (9x20x1): Measurement grid: dx=5mm, dy=5mm
Maximum value of SAR (measured) = 1.09 mW/g

Mid Channel/Zoom Scan (7x7x9)/Cube 0: Measurement grid: dx=5mm, dy=5mm, dz=3mm
Reference Value = 18.0 V/m; Power Drift = 0.016 dB
Peak SAR (extrapolated) = 1.82 W/kg
SAR(1 g) = 0.862 mW/g; SAR(10 g) = 0.409 mW/g
Maximum value of SAR (measured) = 1.16 mW/g

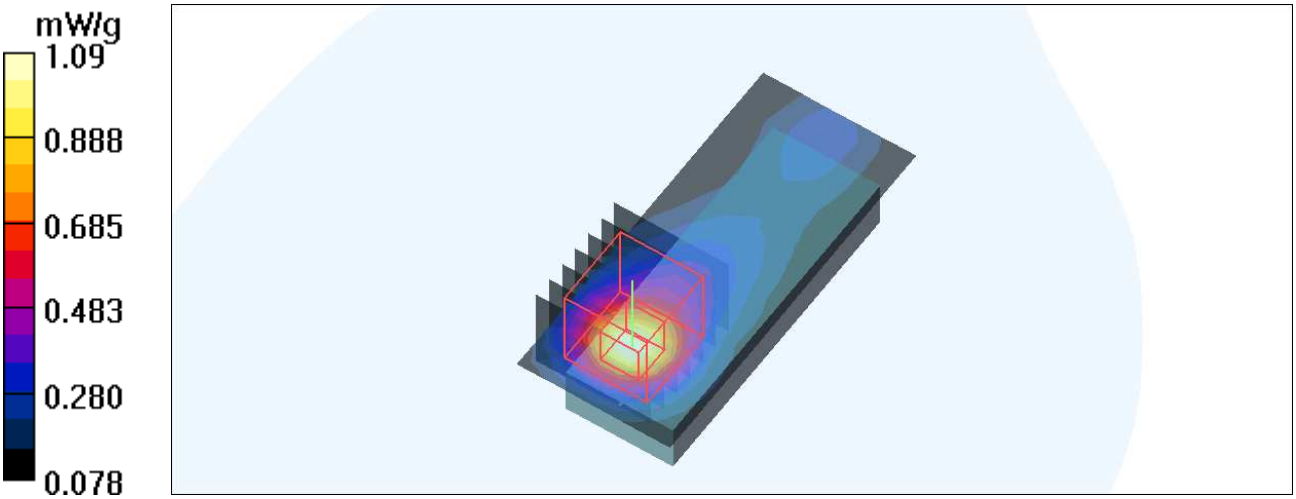

M09-Horizontal down-5M -QPSK1_2-Ant 1

DUT: WIMAX USB Dongle ; Type: WU202
Communication System: Wimax_2.6GHz 5M WU-202 ; Frequency: 2687.5 MHz ; Duty Cycle: 1:3.2 ; Modulation type: QPSK
Medium: MSL2600 Medium parameters used: f = 2687.5 MHz; σ = 2.27 mho/m; ε_r = 52.1; ρ = 1000 kg/m^3
Phantom section: Flat Section ; Separation distance : 5 mm (The Horizontal down side of the EUT to the Phantom)

DASY4 Configuration:
- Probe: EX3DV4 - SN3590 ; ConvF(8.04, 8.04, 8.04) ; Calibrated: 2010/3/25
- Sensor-Surface: 2mm (Mechanical Surface Detection)
- Electronics: DAE4 Sn861 ; Calibrated: 2010/1/22
- Phantom: SAM 12 ; Type: SAM V4.0 ; Serial: TP 1202
- Measurement SW: DASY4, V4.7 Build 80 ; Postprocessing SW: SEMCAD, V1.8 Build 186

High Channel/Area Scan (9x20x1): Measurement grid: dx=5mm, dy=5mm
Maximum value of SAR (measured) = 1.26 mW/g

High Channel/Zoom Scan(7x7x9)/Cube 0: Measurement grid: dx=5mm, dy=5mm, dz=3mm
Reference Value = 18.3 V/m; Power Drift = -0.005 dB
Peak SAR (extrapolated) = 2.07 W/kg
SAR(1 g) = 0.960 mW/g; SAR(10 g) = 0.455 mW/g
Maximum value of SAR (measured) = 1.28 mW/g

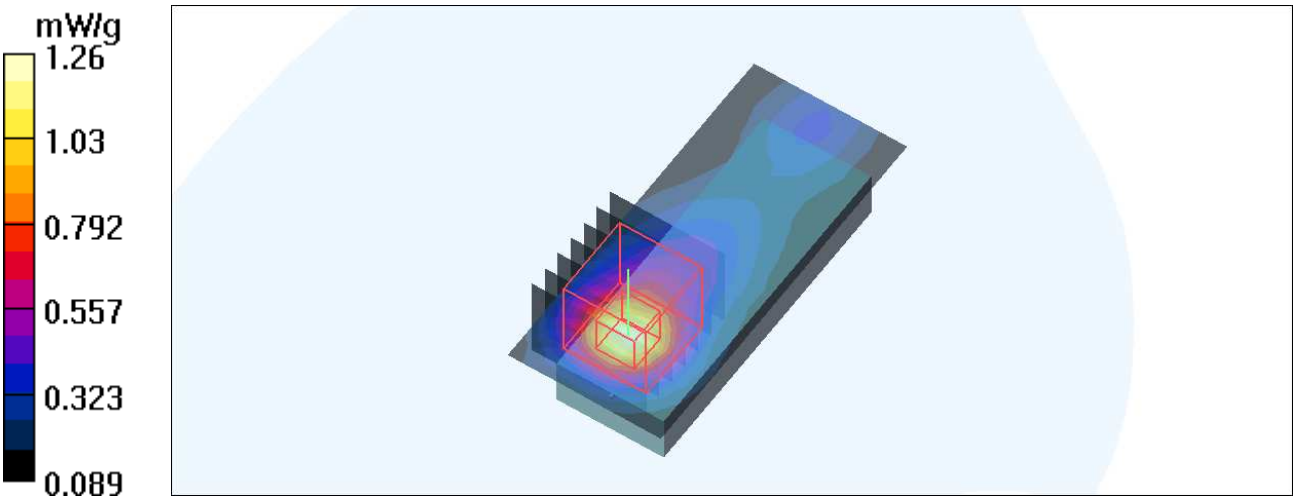

M10-Horizontal down-10M -64QAM1_2-Ant 1

DUT: WIMAX USB Dongle ; Type: WU202
Communication System: Wimax_2.6GHz 10M WU-202 ; Frequency: 2501 MHz ; Duty Cycle: 1:3.2 ; Modulation type: 64QAM
Medium: MSL2600 Medium parameters used: f = 2501 MHz; σ = 2.05 mho/m; ε_r = 52.9; ρ = 1000 kg/m^3
Phantom section: Flat Section ; Separation distance : 5 mm (The Horizontal down side of the EUT to the Phantom)

DASY4 Configuration:
- Probe: EX3DV4 - SN3590 ; ConvF(8.04, 8.04, 8.04) ; Calibrated: 2010/3/25
- Sensor-Surface: 2mm (Mechanical Surface Detection)
- Electronics: DAE4 Sn861 ; Calibrated: 2010/1/22
- Phantom: SAM 12 ; Type: SAM V4.0 ; Serial: TP 1202
- Measurement SW: DASY4, V4.7 Build 80 ; Postprocessing SW: SEMCAD, V1.8 Build 186

Low Channel/Area Scan (9x20x1): Measurement grid: dx=5mm, dy=5mm
Maximum value of SAR (measured) = 0.656 mW/g

Low Channel/Zoom Scan(7x7x9)/Cube 0: Measurement grid: dx=5mm, dy=5mm, dz=3mm
Reference Value = 14.6 V/m; Power Drift = 0.110 dB
Peak SAR (extrapolated) = 1.06 W/kg
SAR(1 g) = 0.527 mW/g; SAR(10 g) = 0.268 mW/g
Maximum value of SAR (measured) = 0.684 mW/g

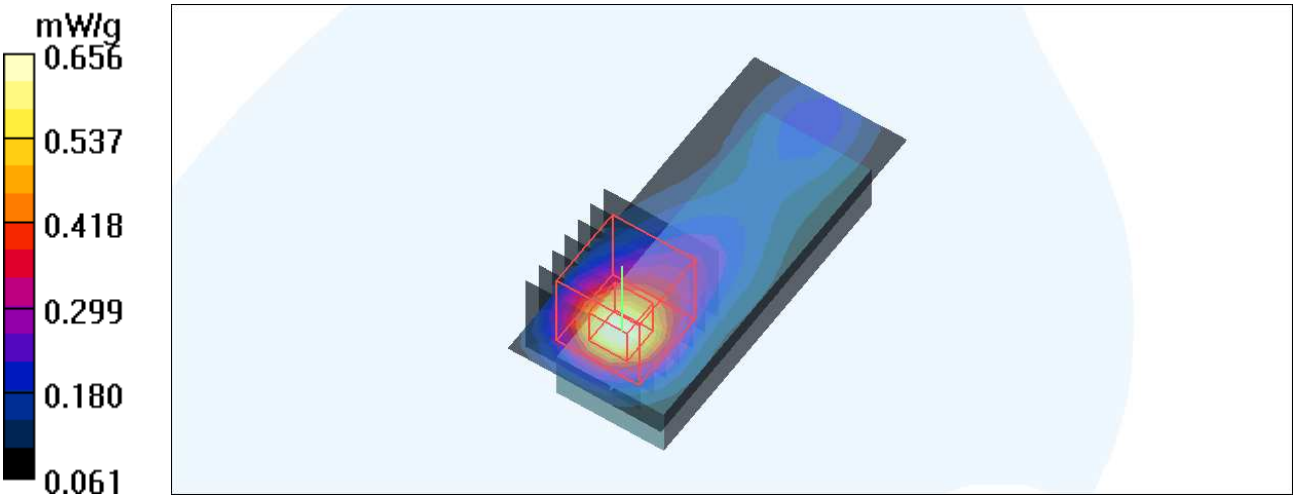

M10-Horizontal down-10M -64QAM1_2-Ant 1

DUT: WIMAX USB Dongle ; Type: WU202
Communication System: Wimax_2.6GHz 10M WU-202 ; Frequency: 2593 MHz ; Duty Cycle: 1:3.2 ; Modulation type: 64QAM
Medium: MSL2600 Medium parameters used: f = 2593 MHz; σ = 2.14 mho/m; ε_r = 52.7; ρ = 1000 kg/m^3
Phantom section: Flat Section ; Separation distance : 5 mm (The Horizontal down side of the EUT to the Phantom)

DASY4 Configuration:
- Probe: EX3DV4 - SN3590 ; ConvF(8.04, 8.04, 8.04) ; Calibrated: 2010/3/25
- Sensor-Surface: 2mm (Mechanical Surface Detection)
- Electronics: DAE4 Sn861 ; Calibrated: 2010/1/22
- Phantom: SAM 12 ; Type: SAM V4.0 ; Serial: TP 1202
- Measurement SW: DASY4, V4.7 Build 80 ; Postprocessing SW: SEMCAD, V1.8 Build 186

Mid Channel/Area Scan (9x20x1): Measurement grid: dx=5mm, dy=5mm
Maximum value of SAR (measured) = 0.912 mW/g

Mid Channel/Zoom Scan(7x7x9)/Cube 0: Measurement grid: dx=5mm, dy=5mm, dz=3mm
Reference Value = 16.7 V/m; Power Drift = -0.071 dB
Peak SAR (extrapolated) = 1.51 W/kg
SAR(1 g) = 0.718 mW/g; SAR(10 g) = 0.346 mW/g
Maximum value of SAR (measured) = 0.940 mW/g

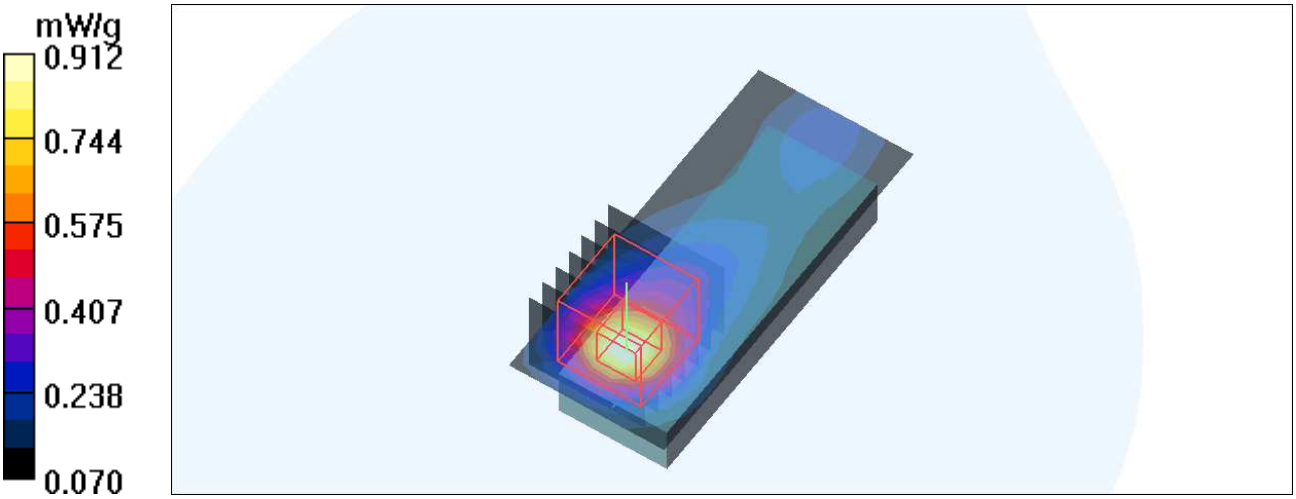

M10-Horizontal down-10M -64QAM1_2-Ant 1

DUT: WIMAX USB Dongle ; Type: WU202
Communication System: Wimax_2.6GHz 10M WU-202 ; Frequency: 2685 MHz ; Duty Cycle: 1:3.2 ; Modulation type: 64QAM
Medium: MSL2600 Medium parameters used: f = 2685 MHz; σ = 2.25 mho/m; ε_r = 52.2; ρ = 1000 kg/m^3
Phantom section: Flat Section ; Separation distance : 5 mm (The Horizontal down side of the EUT to the Phantom)

DASY4 Configuration:
- Probe: EX3DV4 - SN3590 ; ConvF(8.04, 8.04, 8.04) ; Calibrated: 2010/3/25
- Sensor-Surface: 2mm (Mechanical Surface Detection)
- Electronics: DAE4 Sn861 ; Calibrated: 2010/1/22
- Phantom: SAM 12 ; Type: SAM V4.0 ; Serial: TP 1202
- Measurement SW: DASY4, V4.7 Build 80 ; Postprocessing SW: SEMCAD, V1.8 Build 186

High Channel/Area Scan (9x20x1): Measurement grid: dx=5mm, dy=5mm
Maximum value of SAR (measured) = 1.21 mW/g

High Channel/Zoom Scan (7x7x9)/Cube 0: Measurement grid: dx=5mm, dy=5mm, dz=3mm
Reference Value = 19.0 V/m; Power Drift = -0.111 dB
Peak SAR (extrapolated) = 1.92 W/kg
SAR(1 g) = 0.884 mW/g; SAR(10 g) = 0.408 mW/g
Maximum value of SAR (measured) = 1.18 mW/g

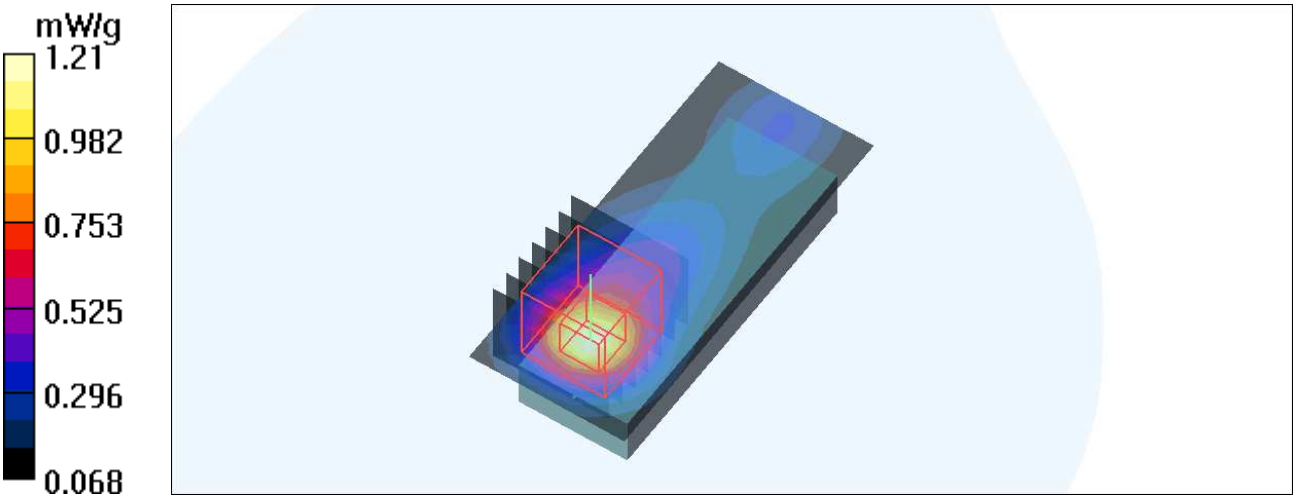

M11-Horizontal down-10M -16QAM1_2-Ant 1

DUT: WIMAX USB Dongle ; Type: WU202
Communication System: Wimax_2.6GHz 10M WU-202 ; Frequency: 2501 MHz ; Duty Cycle: 1:3.2 ; Modulation type: 16QAM
Medium: MSL2600 Medium parameters used: f = 2501 MHz; σ = 2.05 mho/m; ε_r = 52.9; ρ = 1000 kg/m^3
Phantom section: Flat Section ; Separation distance : 5 mm (The Horizontal down side of the EUT to the Phantom)

DASY4 Configuration:
- Probe: EX3DV4 - SN3590 ; ConvF(8.04, 8.04, 8.04) ; Calibrated: 2010/3/25
- Sensor-Surface: 2mm (Mechanical Surface Detection)
- Electronics: DAE4 Sn861 ; Calibrated: 2010/1/22
- Phantom: SAM 12 ; Type: SAM V4.0 ; Serial: TP 1202
- Measurement SW: DASY4, V4.7 Build 80 ; Postprocessing SW: SEMCAD, V1.8 Build 186

Low Channel/Area Scan (9x20x1): Measurement grid: dx=5mm, dy=5mm
Maximum value of SAR (measured) = 0.789 mW/g

Low Channel/Zoom Scan (7x7x9)/Cube 0: Measurement grid: dx=5mm, dy=5mm, dz=3mm
Reference Value = 16.2 V/m; Power Drift = -0.006 dB
Peak SAR (extrapolated) = 1.30 W/kg
SAR(1 g) = 0.626 mW/g; SAR(10 g) = 0.301 mW/g
Maximum value of SAR (measured) = 0.828 mW/g

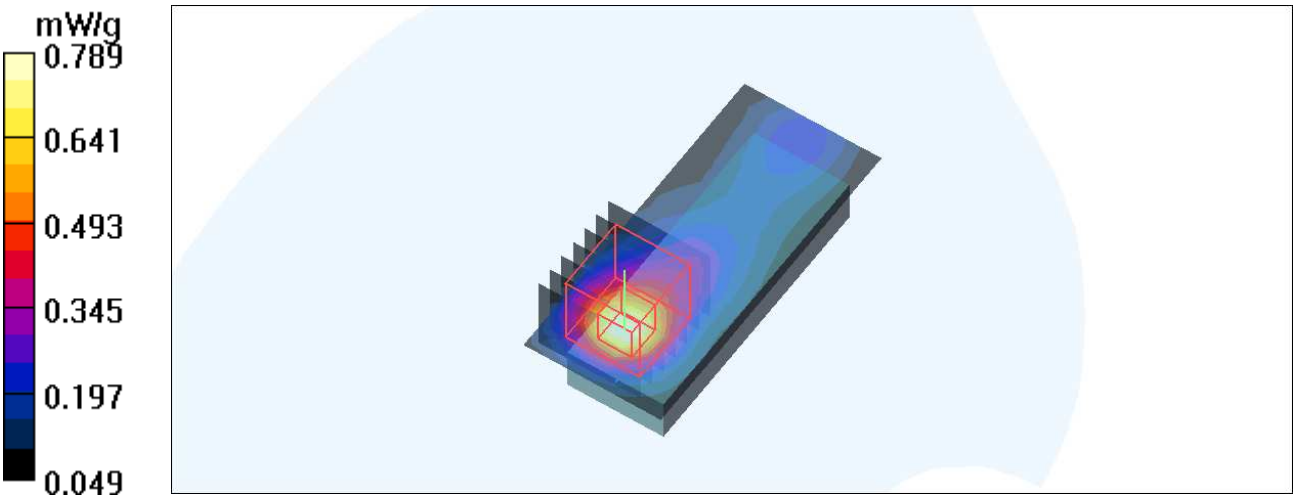

M11-Horizontal down-10M -16QAM1_2-Ant 1

DUT: WIMAX USB Dongle ; Type: WU202
Communication System: Wimax_2.6GHz 10M WU-202 ; Frequency: 2593 MHz ; Duty Cycle: 1:3.2 ; Modulation type: 16QAM
Medium: MSL2600 Medium parameters used: f = 2593 MHz; σ = 2.14 mho/m; ε_r = 52.7; ρ = 1000 kg/m^3
Phantom section: Flat Section ; Separation distance : 5 mm (The Horizontal down side of the EUT to the Phantom)

DASY4 Configuration:
- Probe: EX3DV4 - SN3590 ; ConvF(8.04, 8.04, 8.04) ; Calibrated: 2010/3/25
- Sensor-Surface: 2mm (Mechanical Surface Detection)
- Electronics: DAE4 Sn861 ; Calibrated: 2010/1/22
- Phantom: SAM 12 ; Type: SAM V4.0 ; Serial: TP 1202
- Measurement SW: DASY4, V4.7 Build 80 ; Postprocessing SW: SEMCAD, V1.8 Build 186

Mid Channel/Area Scan (9x20x1): Measurement grid: dx=5mm, dy=5mm
Maximum value of SAR (measured) = 1.32 mW/g

Mid Channel/Zoom Scan (7x7x9)/Cube 0: Measurement grid: dx=5mm, dy=5mm, dz=3mm
Reference Value = 20.4 V/m; Power Drift = -0.081 dB
Peak SAR (extrapolated) = 2.22 W/kg
SAR(1 g) = 1.02 mW/g; SAR(10 g) = 0.464 mW/g
Maximum value of SAR (measured) = 1.37 mW/g

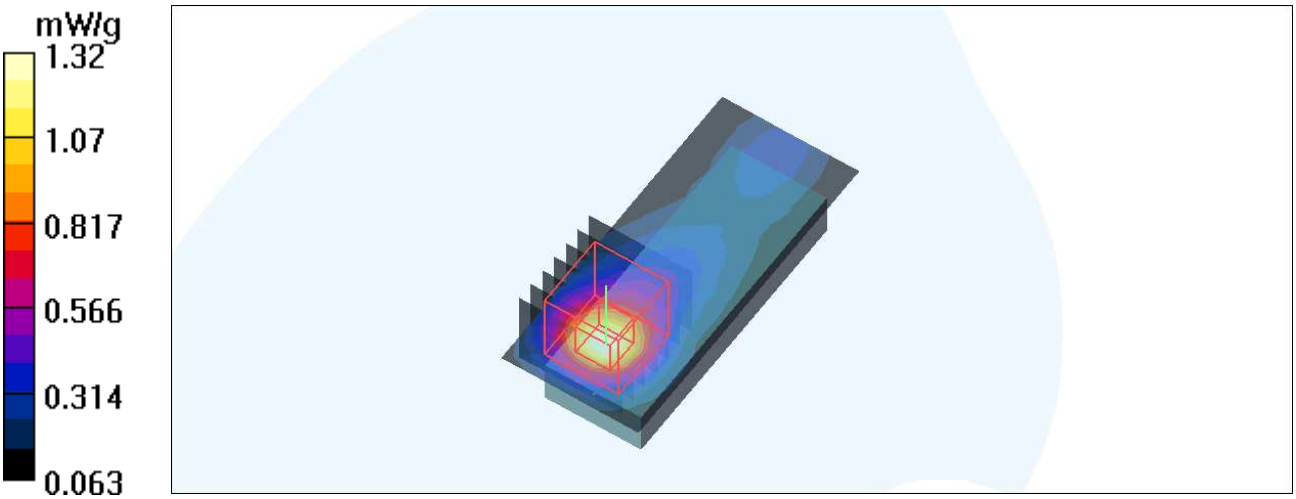

M11-Horizontal down-10M -16QAM1_2-Ant 1

DUT: WIMAX USB Dongle ; Type: WU202
Communication System: Wimax_2.6GHz 10M WU-202 ; Frequency: 2685 MHz ; Duty Cycle: 1:3.2 ; Modulation type: 16QAM
Medium: MSL2600 Medium parameters used: f = 2685 MHz; σ = 2.25 mho/m; ε_r = 52.2; ρ = 1000 kg/m^3
Phantom section: Flat Section ; Separation distance : 5 mm (The Horizontal down side of the EUT to the Phantom)

DASY4 Configuration:
- Probe: EX3DV4 - SN3590 ; ConvF(8.04, 8.04, 8.04) ; Calibrated: 2010/3/25
- Sensor-Surface: 2mm (Mechanical Surface Detection)
- Electronics: DAE4 Sn861 ; Calibrated: 2010/1/22
- Phantom: SAM 12 ; Type: SAM V4.0 ; Serial: TP 1202
- Measurement SW: DASY4, V4.7 Build 80 ; Postprocessing SW: SEMCAD, V1.8 Build 186

High Channel/Area Scan (9x20x1): Measurement grid: dx=5mm, dy=5mm
Maximum value of SAR (measured) = 1.43 mW/g

High Channel/Zoom Scan(7x7x9)/Cube 0: Measurement grid: dx=5mm, dy=5mm, dz=3mm
Reference Value = 20.1 V/m; Power Drift = 0.053 dB
Peak SAR (extrapolated) = 2.42 W/kg
SAR(1 g) = 1.1 mW/g; SAR(10 g) = 0.497 mW/g
Maximum value of SAR (measured) = 1.49 mW/g

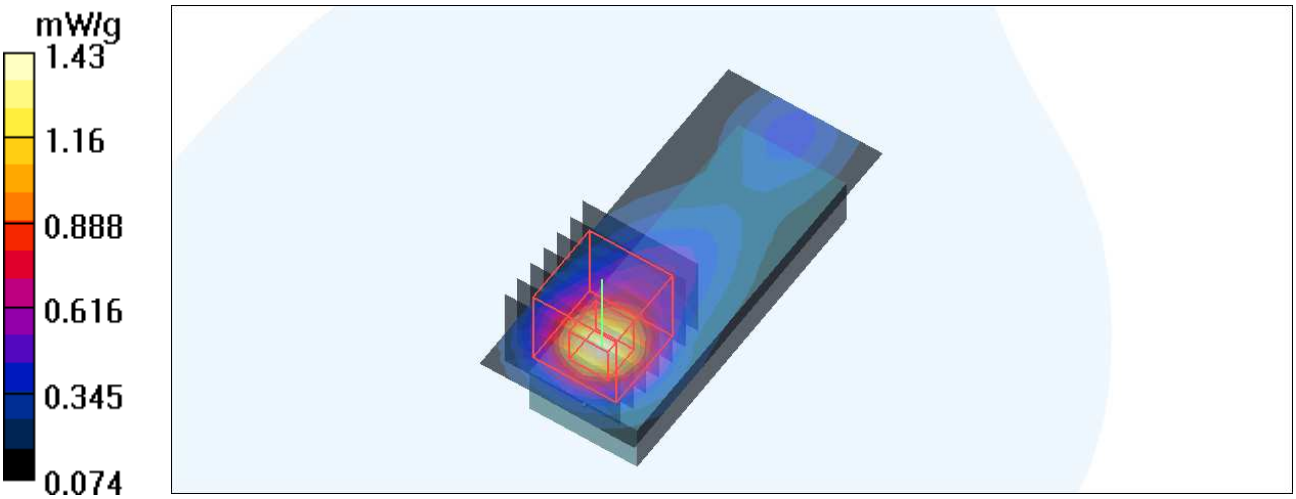

M12-Horizontal down-10M -QPSK1_2-Ant 1

DUT: WIMAX USB Dongle ; Type: WU202
Communication System: Wimax_2.6GHz 10M WU-202 ; Frequency: 2501 MHz ; Duty Cycle: 1:3.2 ; Modulation type: QPSK
Medium: MSL2600 Medium parameters used: f = 2501 MHz; σ = 2.05 mho/m; ε_r = 52.9; ρ = 1000 kg/m^3
Phantom section: Flat Section ; Separation distance : 5 mm (The Horizontal down side of the EUT to the Phantom)

DASY4 Configuration:
- Probe: EX3DV4 - SN3590 ; ConvF(8.04, 8.04, 8.04) ; Calibrated: 2010/3/25
- Sensor-Surface: 2mm (Mechanical Surface Detection)
- Electronics: DAE4 Sn861 ; Calibrated: 2010/1/22
- Phantom: SAM 12 ; Type: SAM V4.0 ; Serial: TP 1202
- Measurement SW: DASY4, V4.7 Build 80 ; Postprocessing SW: SEMCAD, V1.8 Build 186

Low Channel/Area Scan (9x20x1): Measurement grid: dx=5mm, dy=5mm
Maximum value of SAR (measured) = 0.664 mW/g

Low Channel/Zoom Scan (7x7x9)/Cube 0: Measurement grid: dx=5mm, dy=5mm, dz=3mm
Reference Value = 14.5 V/m; Power Drift = 0.076 dB
Peak SAR (extrapolated) = 1.11 W/kg
SAR(1 g) = 0.537 mW/g; SAR(10 g) = 0.272 mW/g
Maximum value of SAR (measured) = 0.696 mW/g

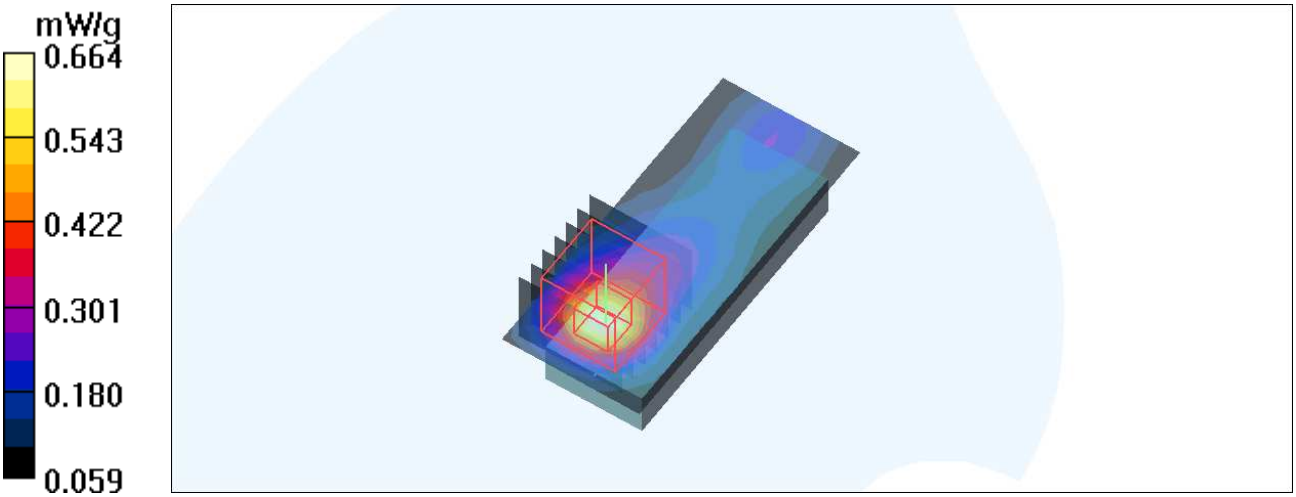

M12-Horizontal down-10M -QPSK1_2-Ant 1

DUT: WIMAX USB Dongle ; Type: WU202
Communication System: Wimax_2.6GHz 10M WU-202 ; Frequency: 2593 MHz ; Duty Cycle: 1:3.2 ; Modulation type: QPSK
Medium: MSL2600 Medium parameters used: f = 2593 MHz; σ = 2.14 mho/m; ε_r = 52.7; ρ = 1000 kg/m^3
Phantom section: Flat Section ; Separation distance : 5 mm (The Horizontal down side of the EUT to the Phantom)

DASY4 Configuration:
- Probe: EX3DV4 - SN3590 ; ConvF(8.04, 8.04, 8.04) ; Calibrated: 2010/3/25
- Sensor-Surface: 2mm (Mechanical Surface Detection)
- Electronics: DAE4 Sn861 ; Calibrated: 2010/1/22
- Phantom: SAM 12 ; Type: SAM V4.0 ; Serial: TP 1202
- Measurement SW: DASY4, V4.7 Build 80 ; Postprocessing SW: SEMCAD, V1.8 Build 186

Mid Channel/Area Scan (9x20x1): Measurement grid: dx=5mm, dy=5mm
Maximum value of SAR (measured) = 1.12 mW/g

Mid Channel/Zoom Scan(7x7x9)/Cube 0: Measurement grid: dx=5mm, dy=5mm, dz=3mm
Reference Value = 18.5 V/m; Power Drift = -0.024 dB
Peak SAR (extrapolated) = 1.90 W/kg
SAR(1 g) = 0.881 mW/g; SAR(10 g) = 0.416 mW/g
Maximum value of SAR (measured) = 1.17 mW/g

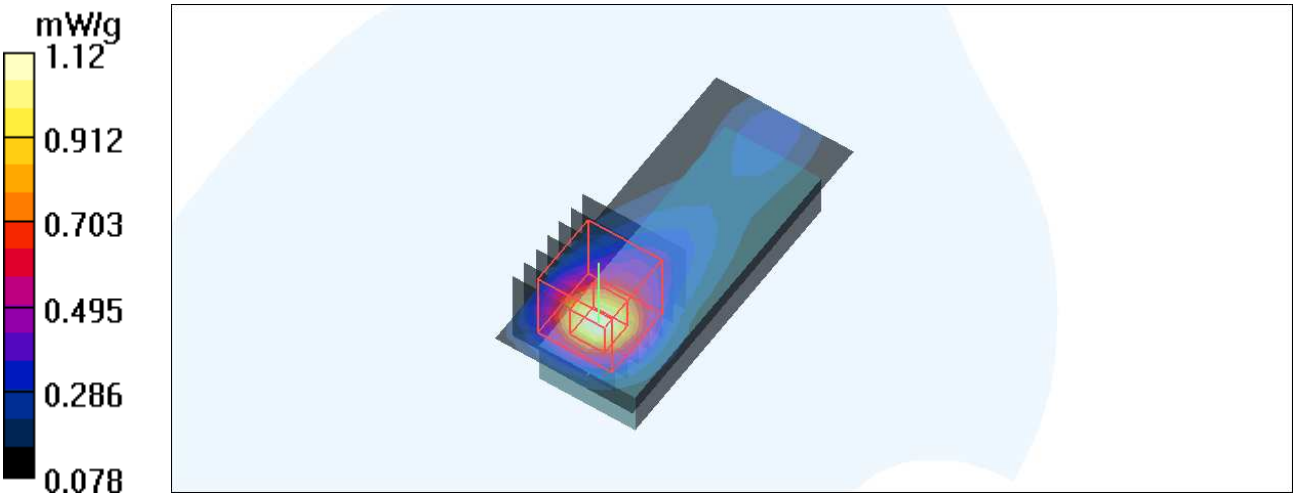

M12-Horizontal down-10M -QPSK1_2-Ant 1

DUT: WIMAX USB Dongle ; Type: WU202
Communication System: Wimax_2.6GHz 10M WU-202 ; Frequency: 2685 MHz ; Duty Cycle: 1:3.2 ; Modulation type: QPSK
Medium: MSL2600 Medium parameters used: f = 2685 MHz; σ = 2.25 mho/m; ε_r = 52.2; ρ = 1000 kg/m^3
Phantom section: Flat Section ; Separation distance : 5 mm (The Horizontal down side of the EUT to the Phantom)

DASY4 Configuration:
- Probe: EX3DV4 - SN3590 ; ConvF(8.04, 8.04, 8.04) ; Calibrated: 2010/3/25
- Sensor-Surface: 2mm (Mechanical Surface Detection)
- Electronics: DAE4 Sn861 ; Calibrated: 2010/1/22
- Phantom: SAM 12 ; Type: SAM V4.0 ; Serial: TP 1202
- Measurement SW: DASY4, V4.7 Build 80 ; Postprocessing SW: SEMCAD, V1.8 Build 186

High Channel/Area Scan (9x20x1): Measurement grid: dx=5mm, dy=5mm
Maximum value of SAR (measured) = 1.16 mW/g

High Channel/Zoom Scan(7x7x9)/Cube 0: Measurement grid: dx=5mm, dy=5mm, dz=3mm
Reference Value = 18.4 V/m; Power Drift = -0.160 dB
Peak SAR (extrapolated) = 1.90 W/kg
SAR(1 g) = 0.888 mW/g; SAR(10 g) = 0.422 mW/g
Maximum value of SAR (measured) = 1.18 mW/g

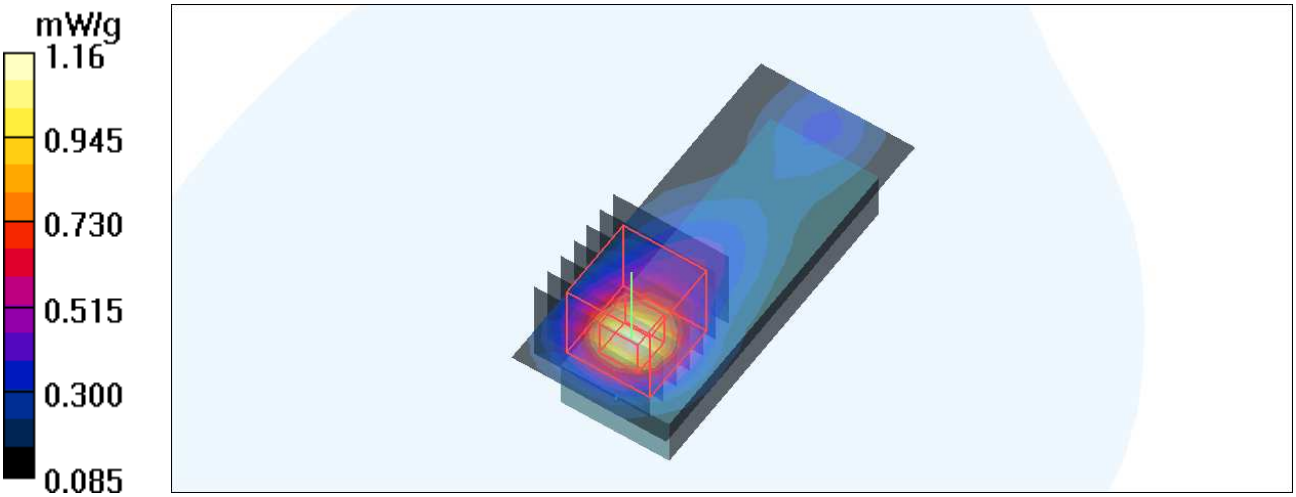

M13-Vertical front-5M -64QAM1_2-Ant 1

DUT: WIMAX USB Dongle ; Type: WU202
Communication System: Wimax_2.6GHz 5M WU-202 ; Frequency: 2687.5 MHz ; Duty Cycle: 1:3.2 ; Modulation type: 64QAM
Medium: MSL2600 Medium parameters used: f = 2687.5 MHz; σ = 2.27 mho/m; ε_r = 52; ρ = 1000 kg/m^3
Phantom section: Flat Section ; Separation distance : 5 mm (The Vertical front side of the EUT to the Phantom)

DASY4 Configuration:
- Probe: EX3DV4 - SN3590 ; ConvF(8.04, 8.04, 8.04) ; Calibrated: 2010/3/25
- Sensor-Surface: 2mm (Mechanical Surface Detection)
- Electronics: DAE4 Sn861 ; Calibrated: 2010/1/22
- Phantom: SAM 12 ; Type: SAM V4.0 ; Serial: TP 1202
- Measurement SW: DASY4, V4.7 Build 80 ; Postprocessing SW: SEMCAD, V1.8 Build 186

High Channel/Area Scan (9x20x1): Measurement grid: dx=5mm, dy=5mm
Maximum value of SAR (measured) = 0.133 mW/g

High Channel/Zoom Scan(7x7x9)/Cube 0: Measurement grid: dx=5mm, dy=5mm, dz=3mm
Reference Value = 8.11 V/m; Power Drift = -0.183 dB
Peak SAR (extrapolated) = 0.228 W/kg
SAR(1 g) = 0.114 mW/g; SAR(10 g) = 0.072 mW/g
Maximum value of SAR (measured) = 0.135 mW/g

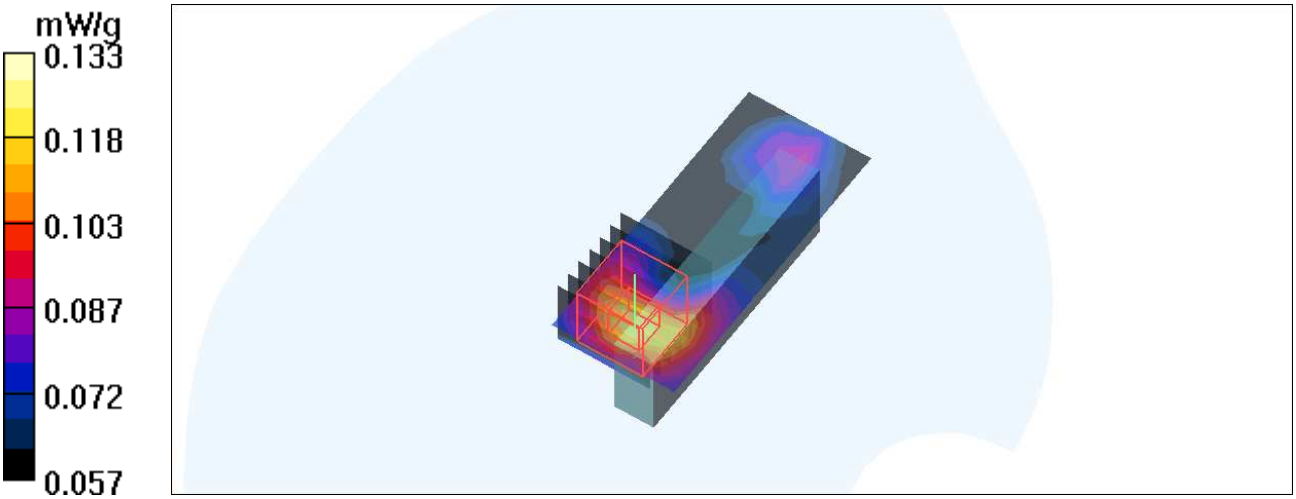

M14-Vertical front-5M -16QAM1_2-Ant 1

DUT: WIMAX USB Dongle ; Type: WU202
Communication System: Wimax_2.6GHz 5M WU-202 ; Frequency: 2687.5 MHz ; Duty Cycle: 1:3.2 ; Modulation type: 16QAM
Medium: MSL2600 Medium parameters used: f = 2687.5 MHz; σ = 2.27 mho/m; ε_r = 52; ρ = 1000 kg/m^3
Phantom section: Flat Section ; Separation distance : 5 mm (The Vertical front side of the EUT to the Phantom)

DASY4 Configuration:
- Probe: EX3DV4 - SN3590 ; ConvF(8.04, 8.04, 8.04) ; Calibrated: 2010/3/25
- Sensor-Surface: 2mm (Mechanical Surface Detection)
- Electronics: DAE4 Sn861 ; Calibrated: 2010/1/22
- Phantom: SAM 12 ; Type: SAM V4.0 ; Serial: TP 1202
- Measurement SW: DASY4, V4.7 Build 80 ; Postprocessing SW: SEMCAD, V1.8 Build 186

High Channel/Area Scan (9x20x1): Measurement grid: dx=5mm, dy=5mm
Maximum value of SAR (measured) = 0.140 mW/g

High Channel/Zoom Scan(7x7x9)/Cube 0: Measurement grid: dx=5mm, dy=5mm, dz=3mm
Reference Value = 8.09 V/m; Power Drift = -0.153 dB
Peak SAR (extrapolated) = 0.203 W/kg
SAR(1 g) = 0.107 mW/g; SAR(10 g) = 0.068 mW/g
Maximum value of SAR (measured) = 0.127 mW/g

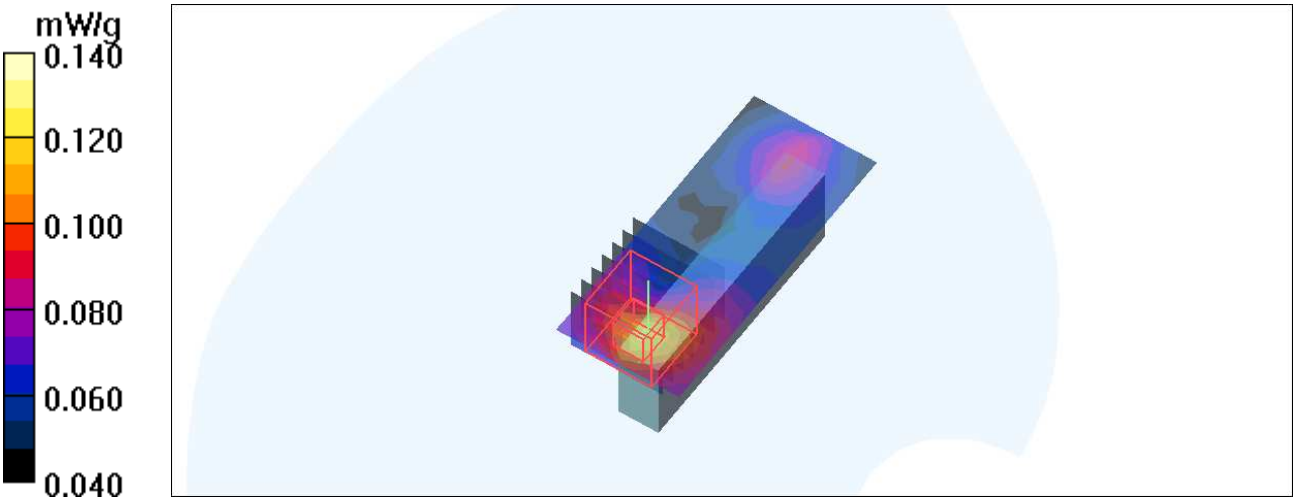

M15-Vertical front-5M -QPSK1_2-Ant 1

DUT: WIMAX USB Dongle ; Type: WU202
Communication System: Wimax_2.6GHz 5M WU-202 ; Frequency: 2687.5 MHz ; Duty Cycle: 1:3.2 ; Modulation type: QPSK
Medium: MSL2600 Medium parameters used: f = 2687.5 MHz; σ = 2.27 mho/m; ε_r = 52; ρ = 1000 kg/m^3
Phantom section: Flat Section ; Separation distance : 5 mm (The Vertical front side of the EUT to the Phantom)

DASY4 Configuration:
- Probe: EX3DV4 - SN3590 ; ConvF(8.04, 8.04, 8.04) ; Calibrated: 2010/3/25
- Sensor-Surface: 2mm (Mechanical Surface Detection)
- Electronics: DAE4 Sn861 ; Calibrated: 2010/1/22
- Phantom: SAM 12 ; Type: SAM V4.0 ; Serial: TP 1202
- Measurement SW: DASY4, V4.7 Build 80 ; Postprocessing SW: SEMCAD, V1.8 Build 186

High Channel/Area Scan (9x20x1): Measurement grid: dx=5mm, dy=5mm
Maximum value of SAR (measured) = 0.183 mW/g

High Channel/Zoom Scan(7x7x9)/Cube 0: Measurement grid: dx=5mm, dy=5mm, dz=3mm
Reference Value = 8.59 V/m; Power Drift = 0.129 dB
Peak SAR (extrapolated) = 0.263 W/kg
SAR(1 g) = 0.141 mW/g; SAR(10 g) = 0.086 mW/g
Maximum value of SAR (measured) = 0.171 mW/g

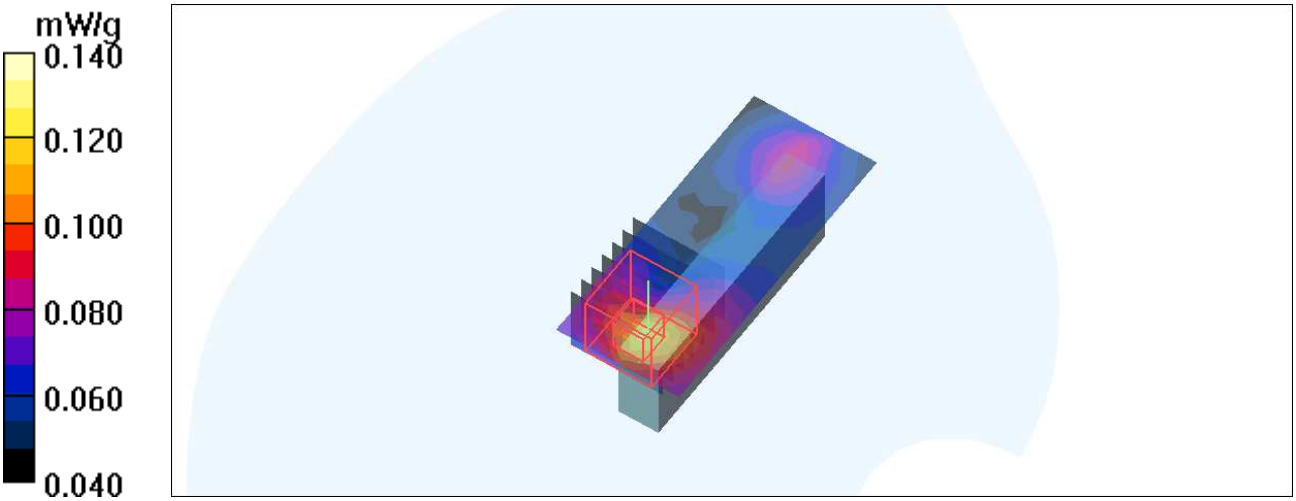

M16-Vertical front-10M -64QAM1_2-Ant 1

DUT: WIMAX USB Dongle ; Type: WU202
Communication System: Wimax_2.6GHz 10M WU-202 ; Frequency: 2685 MHz ; Duty Cycle: 1:3.2 ; Modulation type: 64QAM
Medium: MSL2600 Medium parameters used: f = 2685 MHz; σ = 2.23 mho/m; ε_r = 52.1; ρ = 1000 kg/m^3
Phantom section: Flat Section ; Separation distance : 5 mm (The Vertical front side of the EUT to the Phantom)

DASY4 Configuration:
- Probe: EX3DV4 - SN3590 ; ConvF(8.04, 8.04, 8.04) ; Calibrated: 2010/3/25
- Sensor-Surface: 2mm (Mechanical Surface Detection)
- Electronics: DAE4 Sn861 ; Calibrated: 2010/1/22
- Phantom: SAM 12 ; Type: SAM V4.0 ; Serial: TP 1202
- Measurement SW: DASY4, V4.7 Build 80 ; Postprocessing SW: SEMCAD, V1.8 Build 186

High Channel/Area Scan (9x20x1): Measurement grid: dx=5mm, dy=5mm
Maximum value of SAR (measured) = 0.160 mW/g

High Channel/Zoom Scan(7x7x9)/Cube 0: Measurement grid: dx=5mm, dy=5mm, dz=3mm
Reference Value = 8.50 V/m; Power Drift = -0.155 dB
Peak SAR (extrapolated) = 0.234 W/kg
SAR(1 g) = 0.123 mW/g; SAR(10 g) = 0.077 mW/g
Maximum value of SAR (measured) = 0.147 mW/g

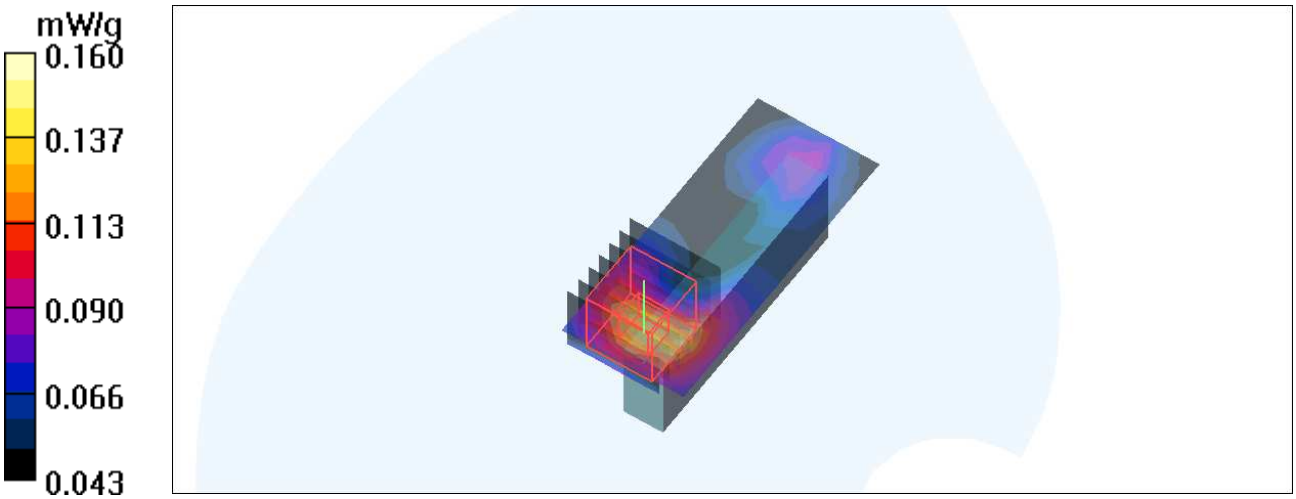

M17-Vertical front-10M -16QAM1_2-Ant 1

DUT: WIMAX USB Dongle ; Type: WU202
Communication System: Wimax_2.6GHz 10M WU-202 ; Frequency: 2685 MHz ; Duty Cycle: 1:3.2 ; Modulation type: 16QAM
Medium: MSL2600 Medium parameters used: f = 2685 MHz; σ = 2.23 mho/m; ε_r = 52.1; ρ = 1000 kg/m^3
Phantom section: Flat Section ; Separation distance : 5 mm (The Vertical front side of the EUT to the Phantom)

DASY4 Configuration:
- Probe: EX3DV4 - SN3590 ; ConvF(8.04, 8.04, 8.04) ; Calibrated: 2010/3/25
- Sensor-Surface: 2mm (Mechanical Surface Detection)
- Electronics: DAE4 Sn861 ; Calibrated: 2010/1/22
- Phantom: SAM 12 ; Type: SAM V4.0 ; Serial: TP 1202
- Measurement SW: DASY4, V4.7 Build 80 ; Postprocessing SW: SEMCAD, V1.8 Build 186

High Channel/Area Scan (9x20x1): Measurement grid: dx=5mm, dy=5mm
Maximum value of SAR (measured) = 0.174 mW/g

High Channel/Zoom Scan(7x7x9)/Cube 0: Measurement grid: dx=5mm, dy=5mm, dz=3mm
Reference Value = 8.90 V/m; Power Drift = -0.136 dB
Peak SAR (extrapolated) = 0.257 W/kg
SAR(1 g) = 0.135 mW/g; SAR(10 g) = 0.082 mW/g
Maximum value of SAR (measured) = 0.164 mW/g

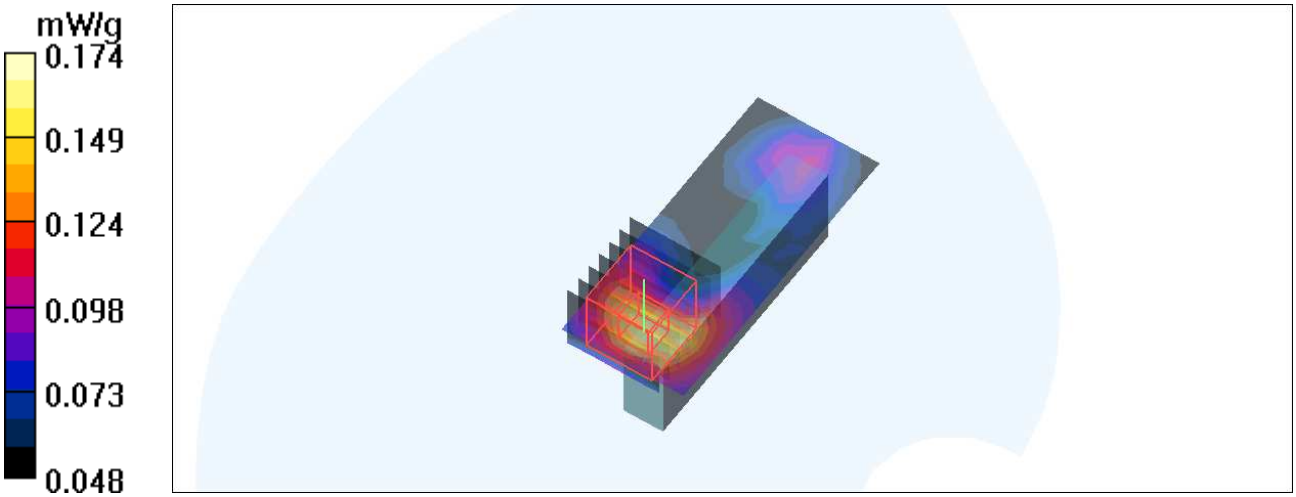

M18-Vertical front-10M -QPSK1_2-Ant 1

DUT: WIMAX USB Dongle ; Type: WU202
Communication System: Wimax_2.6GHz 10M WU-202 ; Frequency: 2685 MHz ; Duty Cycle: 1:3.2 ; Modulation type: QPSK
Medium: MSL2600 Medium parameters used: f = 2685 MHz; σ = 2.23 mho/m; ε_r = 52.1; ρ = 1000 kg/m^3
Phantom section: Flat Section ; Separation distance : 5 mm (The Vertical front side of the EUT to the Phantom)

DASY4 Configuration:
- Probe: EX3DV4 - SN3590 ; ConvF(8.04, 8.04, 8.04) ; Calibrated: 2010/3/25
- Sensor-Surface: 2mm (Mechanical Surface Detection)
- Electronics: DAE4 Sn861 ; Calibrated: 2010/1/22
- Phantom: SAM 12 ; Type: SAM V4.0 ; Serial: TP 1202
- Measurement SW: DASY4, V4.7 Build 80 ; Postprocessing SW: SEMCAD, V1.8 Build 186

High Channel/Area Scan (9x20x1): Measurement grid: dx=5mm, dy=5mm
Maximum value of SAR (measured) = 0.156 mW/g

High Channel/Zoom Scan(7x7x9)/Cube 0: Measurement grid: dx=5mm, dy=5mm, dz=3mm
Reference Value = 8.74 V/m; Power Drift = -0.153 dB
Peak SAR (extrapolated) = 0.237 W/kg
SAR(1 g) = 0.128 mW/g; SAR(10 g) = 0.079 mW/g
Maximum value of SAR (measured) = 0.153 mW/g

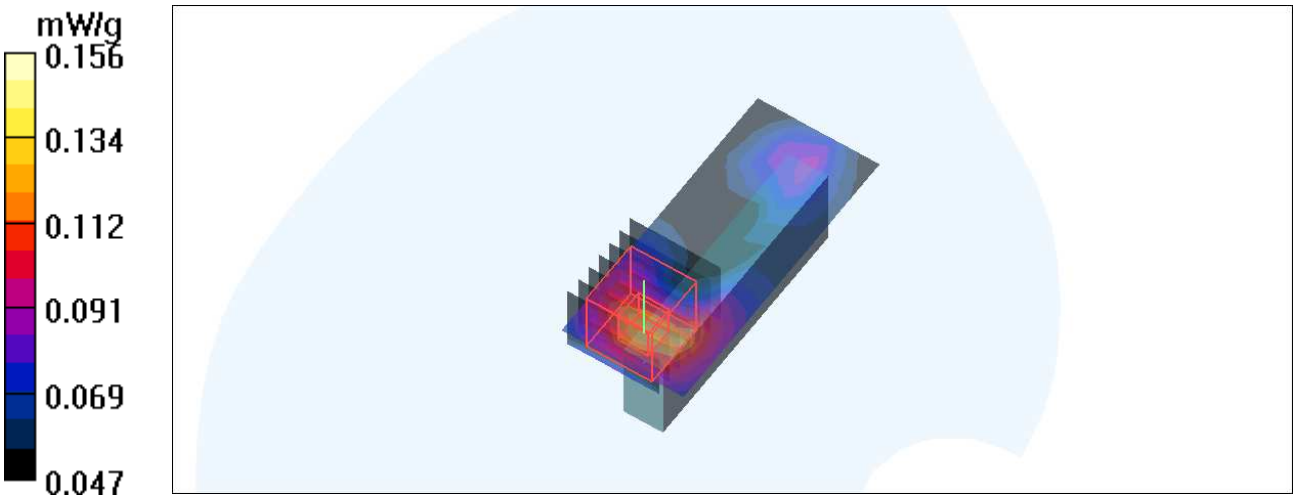

Test Laboratory: Bureau Veritas ADT

M19-Vertical back-5M -64QAM1_2-Ant 1

DUT: WIMAX USB Dongle ; Type: WU202
Communication System: Wimax_2.6GHz 5M WU-202 ; Frequency: 2687.5 MHz ; Duty Cycle: 1:3.2 ; Modulation type: 64QAM
Medium: MSL2600 Medium parameters used: f = 2687.5 MHz; σ = 2.26 mho/m; ε_r = 51.9; ρ = 1000 kg/m^3
Phantom section: Flat Section ; Separation distance : 5 mm (The Vertical back side of the EUT to the Phantom)

DASY4 Configuration:
- Probe: EX3DV4 - SN3590 ; ConvF(8.04, 8.04, 8.04) ; Calibrated: 2010/3/25
- Sensor-Surface: 2mm (Mechanical Surface Detection)
- Electronics: DAE4 Sn861 ; Calibrated: 2010/1/22
- Phantom: SAM 12 ; Type: SAM V4.0 ; Serial: TP 1202
- Measurement SW: DASY4, V4.7 Build 80 ; Postprocessing SW: SEMCAD, V1.8 Build 186

High Channel/Area Scan (9x20x1): Measurement grid: dx=5mm, dy=5mm
Maximum value of SAR (measured) = 0.634 mW/g

High Channel/Zoom Scan (7x7x9)/Cube 0: Measurement grid: dx=5mm, dy=5mm, dz=3mm
Reference Value = 7.75 V/m; Power Drift = -0.165 dB
Peak SAR (extrapolated) = 1.00 W/kg
SAR(1 g) = 0.490 mW/g; SAR(10 g) = 0.244 mW/g
Maximum value of SAR (measured) = 0.633 mW/g

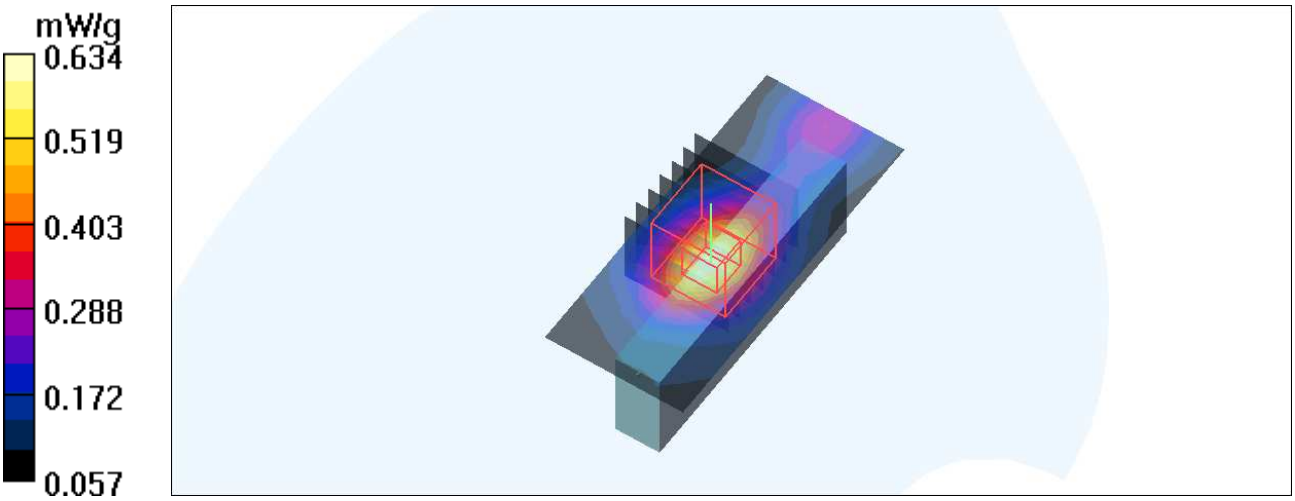

Test Laboratory: Bureau Veritas ADT

M20-Vertical back-5M -16QAM1_2-Ant 1

DUT: WIMAX USB Dongle ; Type: WU202
Communication System: Wimax_2.6GHz 5M WU-202 ; Frequency: 2687.5 MHz ; Duty Cycle: 1:3.2 ; Modulation type: 16QAM
Medium: MSL2600 Medium parameters used: f = 2687.5 MHz; σ = 2.26 mho/m; ε_r = 51.9; ρ = 1000 kg/m^3
Phantom section: Flat Section ; Separation distance : 5 mm (The Vertical back side of the EUT to the Phantom)

DASY4 Configuration:
- Probe: EX3DV4 - SN3590 ; ConvF(8.04, 8.04, 8.04) ; Calibrated: 2010/3/25
- Sensor-Surface: 2mm (Mechanical Surface Detection)
- Electronics: DAE4 Sn861 ; Calibrated: 2010/1/22
- Phantom: SAM 12 ; Type: SAM V4.0 ; Serial: TP 1202
- Measurement SW: DASY4, V4.7 Build 80 ; Postprocessing SW: SEMCAD, V1.8 Build 186

High Channel/Area Scan (9x20x1): Measurement grid: dx=5mm, dy=5mm
Maximum value of SAR (measured) = 0.622 mW/g

High Channel/Zoom Scan (7x7x9)/Cube 0: Measurement grid: dx=5mm, dy=5mm, dz=3mm
Reference Value = 7.65 V/m; Power Drift = -0.160 dB
Peak SAR (extrapolated) = 0.963 W/kg
SAR(1 g) = 0.474 mW/g; SAR(10 g) = 0.238 mW/g
Maximum value of SAR (measured) = 0.608 mW/g

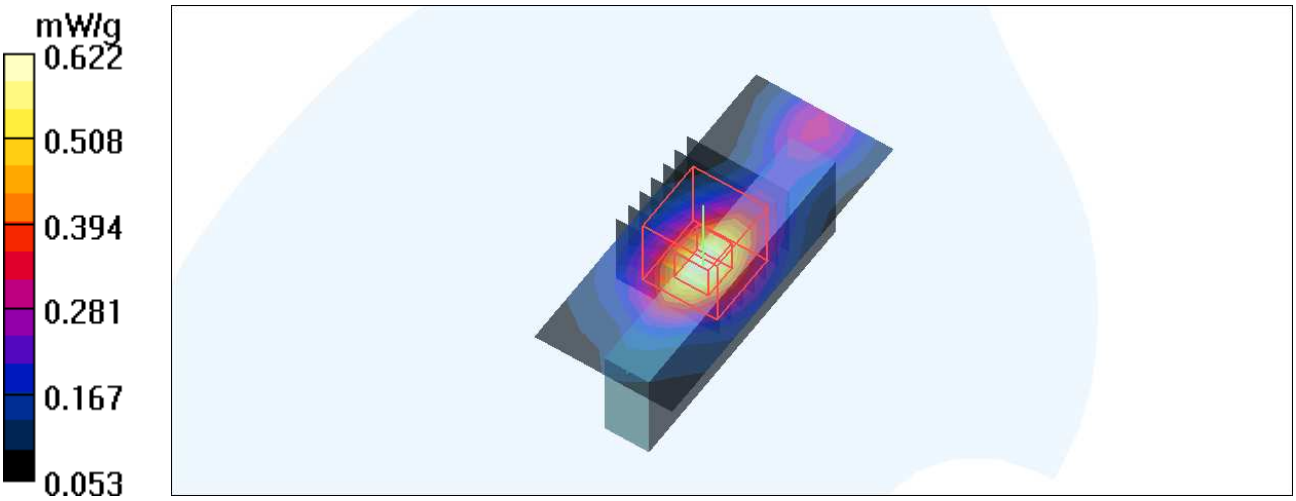

M21-Vertical back-5M -QPSK1_2-Ant 1

DUT: WIMAX USB Dongle ; Type: WU202
Communication System: Wimax_2.6GHz 5M WU-202 ; Frequency: 2687.5 MHz ; Duty Cycle: 1:3.2 ; Modulation type: QPSK
Medium: MSL2600 Medium parameters used: f = 2687.5 MHz; σ = 2.26 mho/m; ε_r = 51.9; ρ = 1000 kg/m^3
Phantom section: Flat Section ; Separation distance : 5 mm (The Vertical back side of the EUT to the Phantom)

DASY4 Configuration:
- Probe: EX3DV4 - SN3590 ; ConvF(8.04, 8.04, 8.04) ; Calibrated: 2010/3/25
- Sensor-Surface: 2mm (Mechanical Surface Detection)
- Electronics: DAE4 Sn861 ; Calibrated: 2010/1/22
- Phantom: SAM 12 ; Type: SAM V4.0 ; Serial: TP 1202
- Measurement SW: DASY4, V4.7 Build 80 ; Postprocessing SW: SEMCAD, V1.8 Build 186

High Channel/Area Scan (9x20x1): Measurement grid: dx=5mm, dy=5mm
Maximum value of SAR (measured) = 0.638 mW/g

High Channel/Zoom Scan (7x7x9)/Cube 0: Measurement grid: dx=5mm, dy=5mm, dz=3mm
Reference Value = 7.74 V/m; Power Drift = -0.179 dB
Peak SAR (extrapolated) = 0.995 W/kg
SAR(1 g) = 0.488 mW/g; SAR(10 g) = 0.245 mW/g
Maximum value of SAR (measured) = 0.626 mW/g

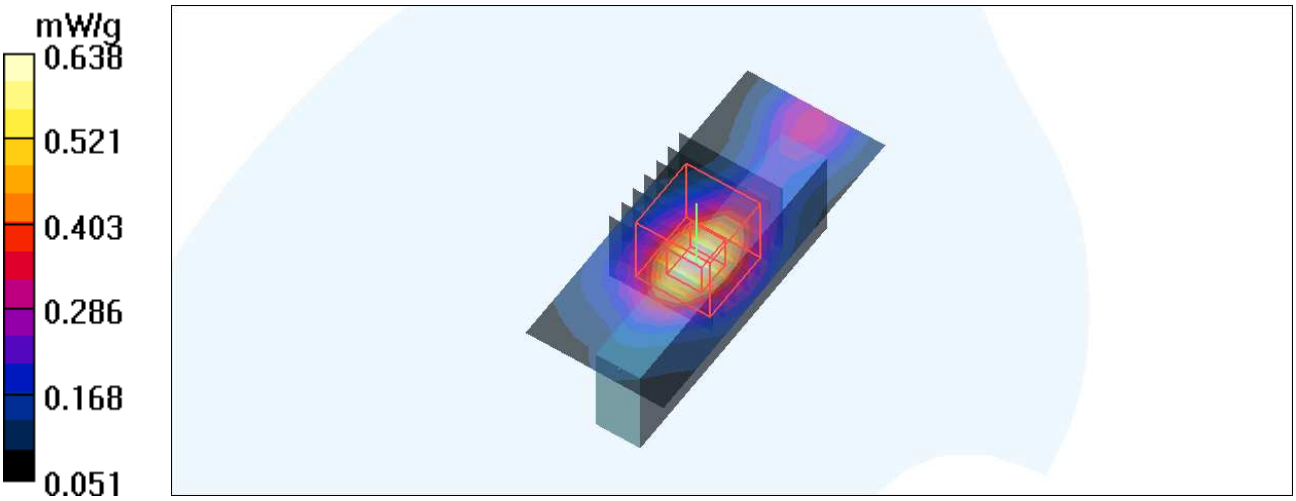

M22-Vertical back-10M -64QAM1_2-Ant 1

DUT: WIMAX USB Dongle ; Type: WU202
Communication System: Wimax_2.6GHz 10M WU-202 ; Frequency: 2685 MHz ; Duty Cycle: 1:3.2 ; Modulation type: 64QAM
Medium: MSL2600 Medium parameters used: f = 2685 MHz; σ = 2.25 mho/m; ε_r = 52; ρ = 1000 kg/m^3
Phantom section: Flat Section ; Separation distance : 5 mm (The Vertical back side of the EUT to the Phantom)

DASY4 Configuration:
- Probe: EX3DV4 - SN3590 ; ConvF(8.04, 8.04, 8.04) ; Calibrated: 2010/3/25
- Sensor-Surface: 2mm (Mechanical Surface Detection)
- Electronics: DAE4 Sn861 ; Calibrated: 2010/1/22
- Phantom: SAM 12 ; Type: SAM V4.0 ; Serial: TP 1202
- Measurement SW: DASY4, V4.7 Build 80 ; Postprocessing SW: SEMCAD, V1.8 Build 186

High Channel/Area Scan (9x20x1): Measurement grid: dx=5mm, dy=5mm
Maximum value of SAR (measured) = 0.668 mW/g

High Channel/Zoom Scan (7x7x9)/Cube 0: Measurement grid: dx=5mm, dy=5mm, dz=3mm
Reference Value = 8.05 V/m; Power Drift = -0.102 dB
Peak SAR (extrapolated) = 1.02 W/kg
SAR(1 g) = 0.508 mW/g; SAR(10 g) = 0.256 mW/g
Maximum value of SAR (measured) = 0.653 mW/g

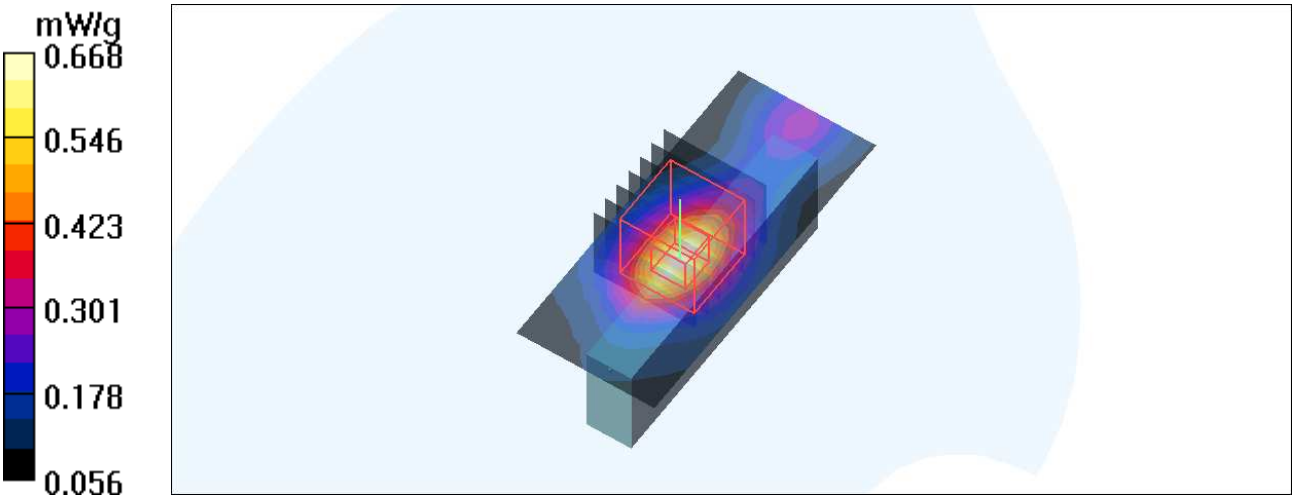

M23-Vertical back-10M 16QAM1_2-Ant 1

DUT: WIMAX USB Dongle ; Type: WU202
Communication System: Wimax_2.6GHz 10M WU-202 ; Frequency: 2685 MHz ; Duty Cycle: 1:3.2 ; Modulation type: 16QAM
Medium: MSL2600 Medium parameters used: f = 2685 MHz; σ = 2.25 mho/m; ε_r = 52; ρ = 1000 kg/m^3
Phantom section: Flat Section ; Separation distance : 5 mm (The Vertical back side of the EUT to the Phantom)

DASY4 Configuration:
- Probe: EX3DV4 - SN3590 ; ConvF(8.04, 8.04, 8.04) ; Calibrated: 2010/3/25
- Sensor-Surface: 2mm (Mechanical Surface Detection)
- Electronics: DAE4 Sn861 ; Calibrated: 2010/1/22
- Phantom: SAM 12 ; Type: SAM V4.0 ; Serial: TP 1202
- Measurement SW: DASY4, V4.7 Build 80 ; Postprocessing SW: SEMCAD, V1.8 Build 186

High Channel/Area Scan (9x20x1): Measurement grid: dx=5mm, dy=5mm
Maximum value of SAR (measured) = 0.699 mW/g

High Channel/Zoom Scan (7x7x9)/Cube 0: Measurement grid: dx=5mm, dy=5mm, dz=3mm
Reference Value = 8.19 V/m; Power Drift = -0.161 dB
Peak SAR (extrapolated) = 1.08 W/kg
SAR(1 g) = 0.534 mW/g; SAR(10 g) = 0.268 mW/g
Maximum value of SAR (measured) = 0.684 mW/g

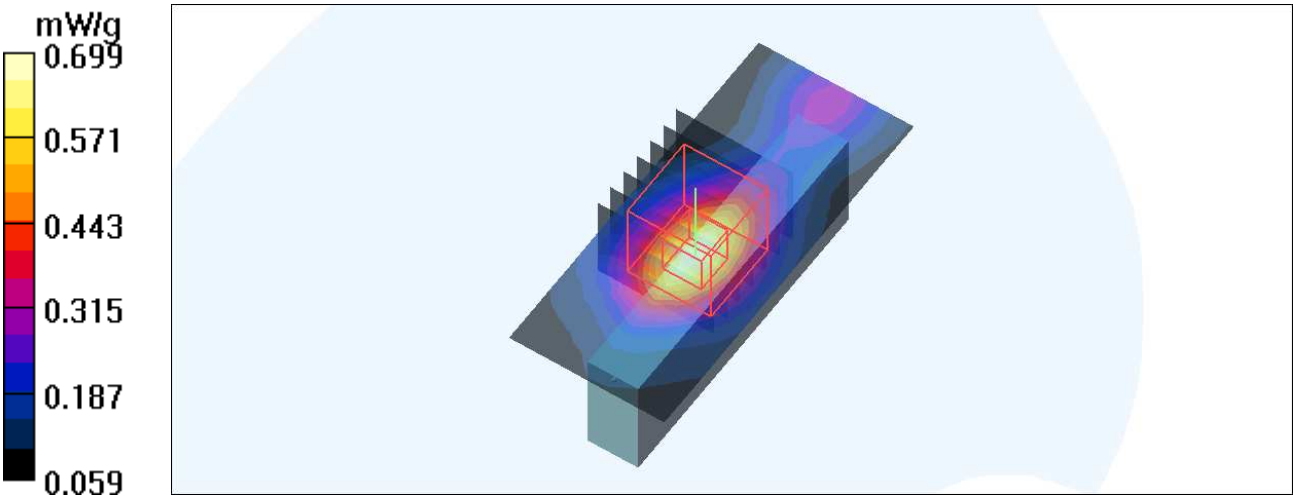

M24-Vertical back-10M -QPSK1_2-Ant 1

DUT: WIMAX USB Dongle ; Type: WU202
Communication System: Wimax_2.6GHz 10M WU-202 ; Frequency: 2685 MHz ; Duty Cycle: 1:3.2 ; Modulation type: QPSK
Medium: MSL2600 Medium parameters used: f = 2685 MHz; σ = 2.25 mho/m; ε_r = 52; ρ = 1000 kg/m^3
Phantom section: Flat Section ; Separation distance : 5 mm (The Vertical back side of the EUT to the Phantom)

DASY4 Configuration:
- Probe: EX3DV4 - SN3590 ; ConvF(8.04, 8.04, 8.04) ; Calibrated: 2010/3/25
- Sensor-Surface: 2mm (Mechanical Surface Detection)
- Electronics: DAE4 Sn861 ; Calibrated: 2010/1/22
- Phantom: SAM 12 ; Type: SAM V4.0 ; Serial: TP 1202
- Measurement SW: DASY4, V4.7 Build 80 ; Postprocessing SW: SEMCAD, V1.8 Build 186

High Channel/Area Scan (9x20x1): Measurement grid: dx=5mm, dy=5mm
Maximum value of SAR (measured) = 0.675 mW/g

High Channel/Zoom Scan (7x7x9)/Cube 0: Measurement grid: dx=5mm, dy=5mm, dz=3mm
Reference Value = 8.10 V/m; Power Drift = -0.105 dB
Peak SAR (extrapolated) = 1.05 W/kg
SAR(1 g) = 0.516 mW/g; SAR(10 g) = 0.260 mW/g
Maximum value of SAR (measured) = 0.661 mW/g

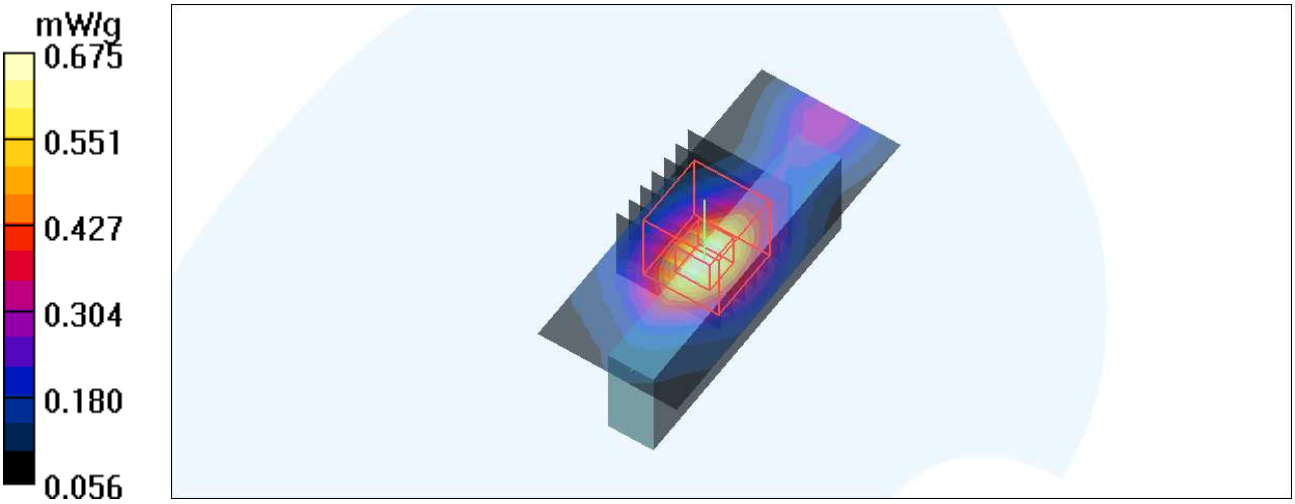

Test Laboratory: Bureau Veritas ADT

M25-Tip-5M -64QAM1_2-Ant 1

DUT: WIMAX USB Dongle ; Type: WU202
Communication System: Wimax_2.6GHz 5M WU-202 ; Frequency: 2687.5 MHz ; Duty Cycle: 1:3.2 ; Modulation type: 64QAM
Medium: MSL2600 Medium parameters used: f = 2687.5 MHz; σ = 2.26 mho/m; ε_r = 52; ρ = 1000 kg/m^3
Phantom section: Flat Section ; Separation distance : 5 mm (The Tip side of the EUT to the Phantom)

DASY4 Configuration:
- Probe: EX3DV4 - SN3590 ; ConvF(8.04, 8.04, 8.04) ; Calibrated: 2010/3/25
- Sensor-Surface: 2mm (Mechanical Surface Detection)
- Electronics: DAE4 Sn861 ; Calibrated: 2010/1/22
- Phantom: SAM 12 ; Type: SAM V4.0 ; Serial: TP 1202
- Measurement SW: DASY4, V4.7 Build 80 ; Postprocessing SW: SEMCAD, V1.8 Build 186

High Channel/Area Scan (9x9x1): Measurement grid: dx=5mm, dy=5mm
Maximum value of SAR (measured) = 0.598 mW/g

High Channel/Zoom Scan(7x7x9)/Cube 0: Measurement grid: dx=5mm, dy=5mm, dz=3mm
Reference Value = 16.8 V/m; Power Drift = -0.108 dB
Peak SAR (extrapolated) = 0.995 W/kg
SAR(1 g) = 0.443 mW/g; SAR(10 g) = 0.188 mW/g
Maximum value of SAR (measured) = 0.606 mW/g

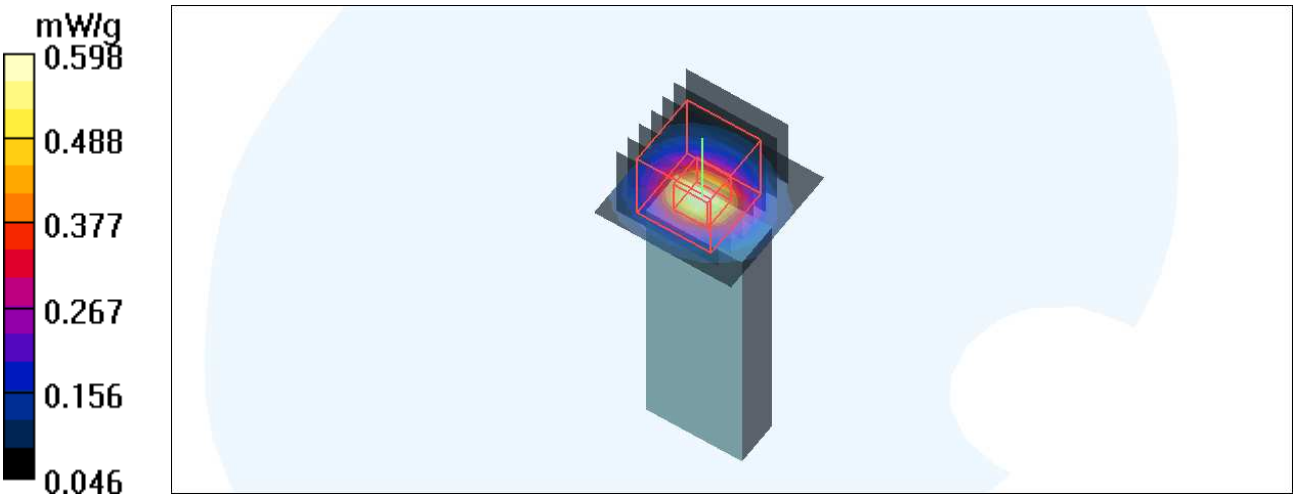

M26-Tip-5M -16QAM1_2-Ant 1

DUT: WIMAX USB Dongle ; Type: WU202
Communication System: Wimax_2.6GHz 5M WU-202 ; Frequency: 2687.5 MHz ; Duty Cycle: 1:3.2 ; Modulation type: 16QAM
Medium: MSL2600 Medium parameters used: f = 2687.5 MHz; σ = 2.26 mho/m; ε_r = 52; ρ = 1000 kg/m^3
Phantom section: Flat Section ; Separation distance : 5 mm (The Tip side of the EUT to the Phantom)

DASY4 Configuration:
- Probe: EX3DV4 - SN3590 ; ConvF(8.04, 8.04, 8.04) ; Calibrated: 2010/3/25
- Sensor-Surface: 2mm (Mechanical Surface Detection)
- Electronics: DAE4 Sn861 ; Calibrated: 2010/1/22
- Phantom: SAM 12 ; Type: SAM V4.0 ; Serial: TP 1202
- Measurement SW: DASY4, V4.7 Build 80 ; Postprocessing SW: SEMCAD, V1.8 Build 186

High Channel/Area Scan (9x9x1): Measurement grid: dx=5mm, dy=5mm
Maximum value of SAR (measured) = 0.688 mW/g

High Channel/Zoom Scan (7x7x9)/Cube 0: Measurement grid: dx=5mm, dy=5mm, dz=3mm
Reference Value = 18.0 V/m; Power Drift = -0.167 dB
Peak SAR (extrapolated) = 1.17 W/kg
SAR(1 g) = 0.515 mW/g; SAR(10 g) = 0.217 mW/g
Maximum value of SAR (measured) = 0.705 mW/g

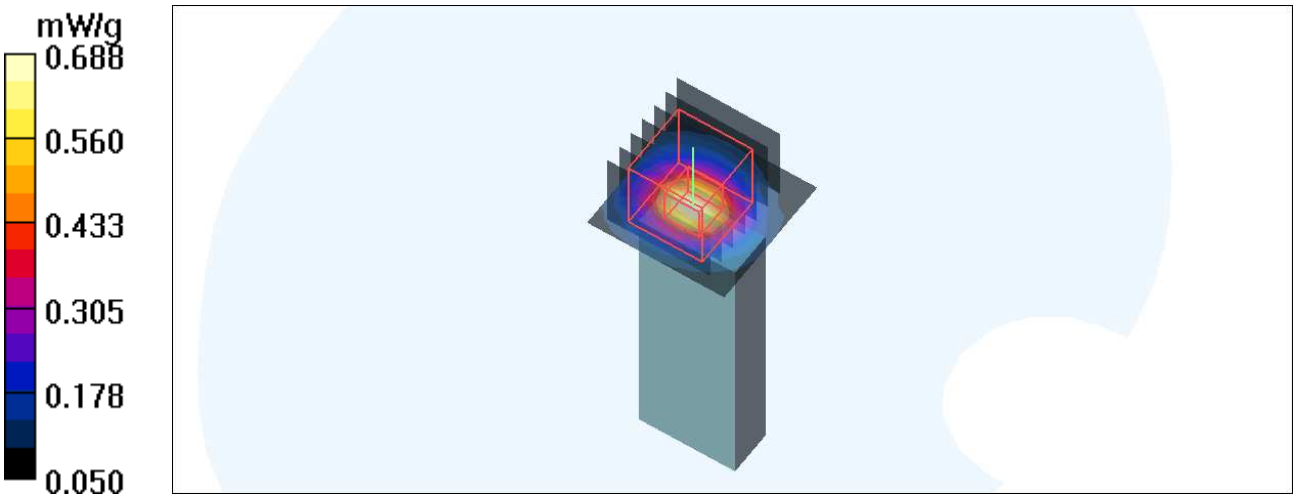

Test Laboratory: Bureau Veritas ADT

M27-Tip-5M -QPSK1_2-Ant 1

DUT: WIMAX USB Dongle ; Type: WU202
Communication System: Wimax_2.6GHz 5M WU-202 ; Frequency: 2687.5 MHz ; Duty Cycle: 1:3.2 ; Modulation type: QPSK
Medium: MSL2600 Medium parameters used: f = 2687.5 MHz; σ = 2.26 mho/m; ε_r = 52; ρ = 1000 kg/m^3
Phantom section: Flat Section ; Separation distance : 5 mm (The Tip side of the EUT to the Phantom)

DASY4 Configuration:
- Probe: EX3DV4 - SN3590 ; ConvF(8.04, 8.04, 8.04) ; Calibrated: 2010/3/25
- Sensor-Surface: 2mm (Mechanical Surface Detection)
- Electronics: DAE4 Sn861 ; Calibrated: 2010/1/22
- Phantom: SAM 12 ; Type: SAM V4.0 ; Serial: TP 1202
- Measurement SW: DASY4, V4.7 Build 80 ; Postprocessing SW: SEMCAD, V1.8 Build 186

High Channel/Area Scan (9x9x1): Measurement grid: dx=5mm, dy=5mm
Maximum value of SAR (measured) = 0.640 mW/g

High Channel/Zoom Scan (7x7x9)/Cube 0: Measurement grid: dx=5mm, dy=5mm, dz=3mm
Reference Value = 17.0 V/m; Power Drift = -0.030 dB
Peak SAR (extrapolated) = 1.10 W/kg
SAR(1 g) = 0.484 mW/g; SAR(10 g) = 0.204 mW/g
Maximum value of SAR (measured) = 0.663 mW/g

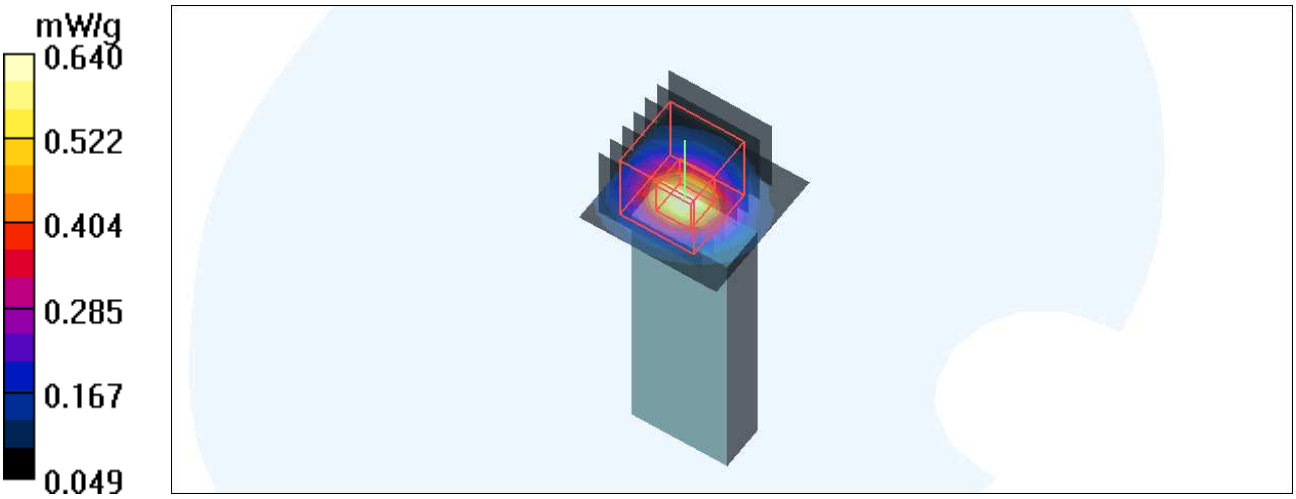

M28-Tip-10M -64QAM1_2-Ant 1

DUT: WIMAX USB Dongle ; Type: WU202
Communication System: Wimax_2.6GHz 10M WU-202 ; Frequency: 2685 MHz ; Duty Cycle: 1:3.2 ; Modulation type: 64QAM
Medium: MSL2600 Medium parameters used: f = 2685 MHz; σ = 2.24 mho/m; ε_r = 52.1; ρ = 1000 kg/m^3
Phantom section: Flat Section ; Separation distance : 5 mm (The Tip side of the EUT to the Phantom)

DASY4 Configuration:
- Probe: EX3DV4 - SN3590 ; ConvF(8.04, 8.04, 8.04) ; Calibrated: 2010/3/25
- Sensor-Surface: 2mm (Mechanical Surface Detection)
- Electronics: DAE4 Sn861 ; Calibrated: 2010/1/22
- Phantom: SAM 12 ; Type: SAM V4.0 ; Serial: TP 1202
- Measurement SW: DASY4, V4.7 Build 80 ; Postprocessing SW: SEMCAD, V1.8 Build 186

High Channel/Area Scan (9x9x1): Measurement grid: dx=5mm, dy=5mm
Maximum value of SAR (measured) = 0.623 mW/g

High Channel/Zoom Scan (7x7x9)/Cube 0: Measurement grid: dx=5mm, dy=5mm, dz=3mm
Reference Value = 16.5 V/m; Power Drift = -0.089 dB
Peak SAR (extrapolated) = 1.04 W/kg
SAR(1 g) = 0.465 mW/g; SAR(10 g) = 0.198 mW/g
Maximum value of SAR (measured) = 0.634 mW/g

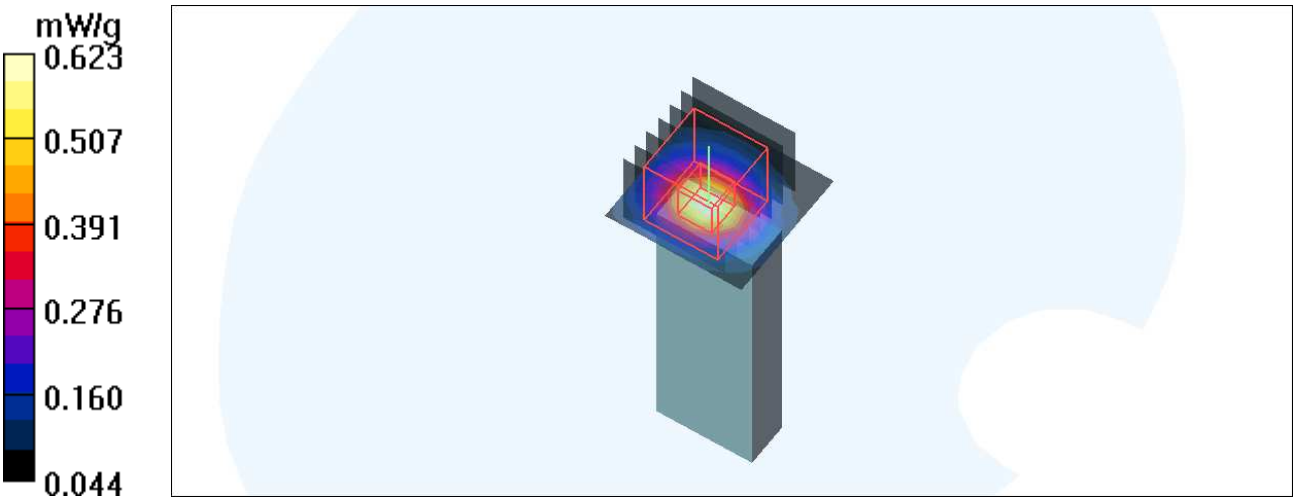

Test Laboratory: Bureau Veritas ADT

M29-Tip-10M -16QAM1_2-Ant 1

DUT: WIMAX USB Dongle ; Type: WU202
Communication System: Wimax_2.6GHz 10M WU-202 ; Frequency: 2685 MHz ; Duty Cycle: 1:3.2 ; Modulation type: 16QAM
Medium: MSL2600 Medium parameters used: f = 2685 MHz; σ = 2.24 mho/m; ε_r = 52.1; ρ = 1000 kg/m^3
Phantom section: Flat Section ; Separation distance : 5 mm (The Tip side of the EUT to the Phantom)

DASY4 Configuration:
- Probe: EX3DV4 - SN3590 ; ConvF(8.04, 8.04, 8.04) ; Calibrated: 2010/3/25
- Sensor-Surface: 2mm (Mechanical Surface Detection)
- Electronics: DAE4 Sn861 ; Calibrated: 2010/1/22
- Phantom: SAM 12 ; Type: SAM V4.0 ; Serial: TP 1202
- Measurement SW: DASY4, V4.7 Build 80 ; Postprocessing SW: SEMCAD, V1.8 Build 186

High Channel/Area Scan (9x9x1): Measurement grid: dx=5mm, dy=5mm
Maximum value of SAR (measured) = 0.692 mW/g

High Channel/Zoom Scan (7x7x9)/Cube 0: Measurement grid: dx=5mm, dy=5mm, dz=3mm
Reference Value = 17.1 V/m; Power Drift = -0.118 dB
Peak SAR (extrapolated) = 1.13 W/kg
SAR(1 g) = 0.504 mW/g; SAR(10 g) = 0.215 mW/g
Maximum value of SAR (measured) = 0.686 mW/g

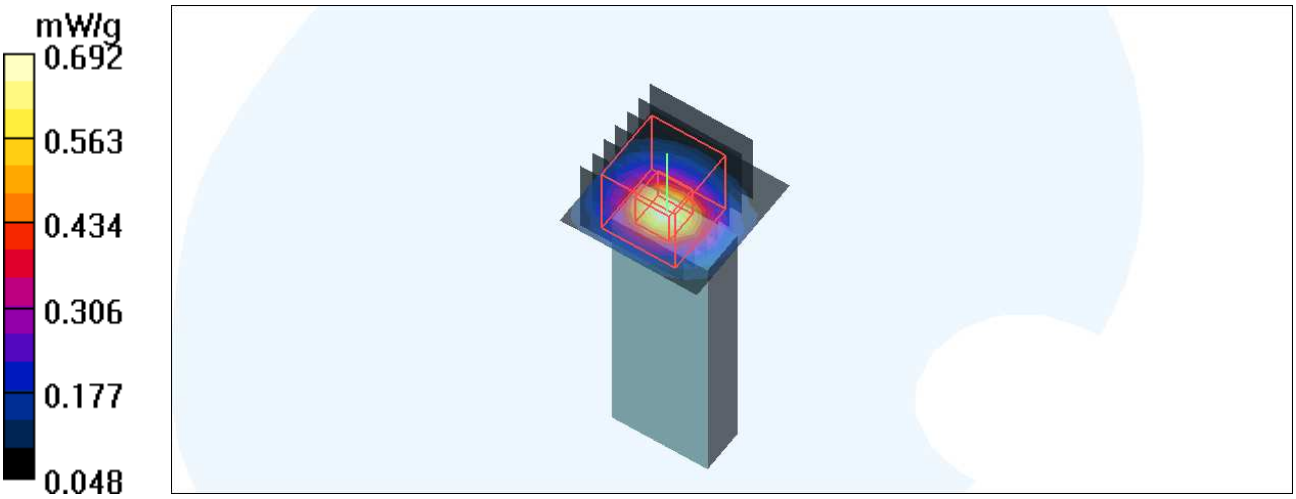

Test Laboratory: Bureau Veritas ADT

M30-Tip-10M -QPSK1_2-Ant 1

DUT: WIMAX USB Dongle ; Type: WU202
Communication System: Wimax_2.6GHz 10M WU-202 ; Frequency: 2685 MHz ; Duty Cycle: 1:3.2 ; Modulation type: QPSK
Medium: MSL2600 Medium parameters used: f = 2685 MHz; σ = 2.24 mho/m; ε_r = 52.1; ρ = 1000 kg/m^3
Phantom section: Flat Section ; Separation distance : 5 mm (The Tip side of the EUT to the Phantom)

DASY4 Configuration:
- Probe: EX3DV4 - SN3590 ; ConvF(8.04, 8.04, 8.04) ; Calibrated: 2010/3/25
- Sensor-Surface: 2mm (Mechanical Surface Detection)
- Electronics: DAE4 Sn861 ; Calibrated: 2010/1/22
- Phantom: SAM 12 ; Type: SAM V4.0 ; Serial: TP 1202
- Measurement SW: DASY4, V4.7 Build 80 ; Postprocessing SW: SEMCAD, V1.8 Build 186

High Channel/Area Scan (9x9x1): Measurement grid: dx=5mm, dy=5mm
Maximum value of SAR (measured) = 0.637 mW/g

High Channel/Zoom Scan(7x7x9)/Cube 0: Measurement grid: dx=5mm, dy=5mm, dz=3mm
Reference Value = 16.5 V/m; Power Drift = -0.185 dB
Peak SAR (extrapolated) = 1.09 W/kg
SAR(1 g) = 0.481 mW/g; SAR(10 g) = 0.206 mW/g
Maximum value of SAR (measured) = 0.655 mW/g

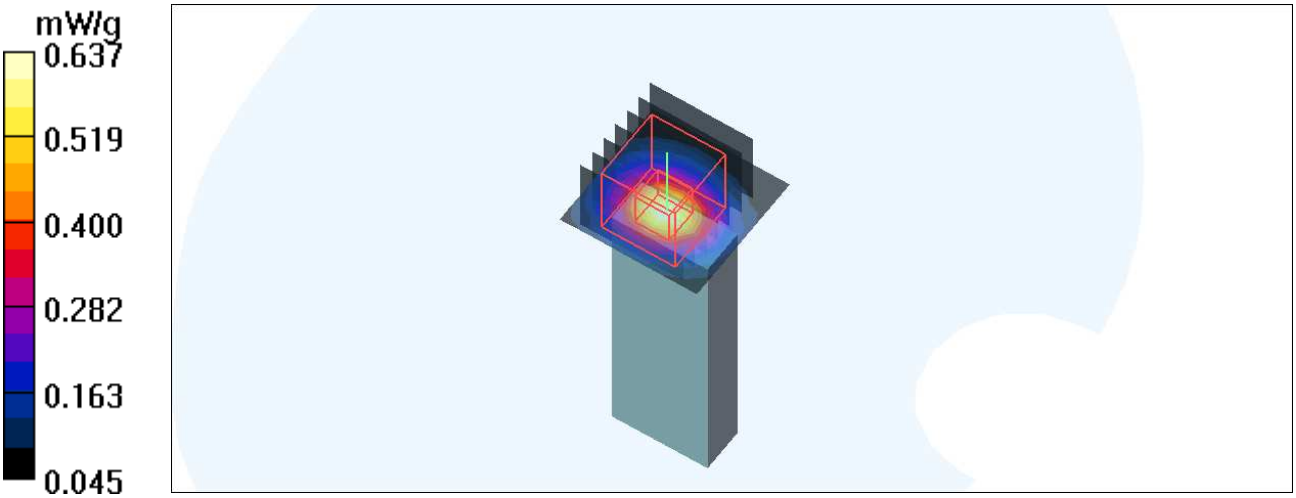

Date/Time: 2010/6/19 01:02:08

Test Laboratory: Bureau Veritas ADT

System Validation Check-MSL 2450MHz 6-19

DUT: Dipole 2450 MHz ; Type: D2450V2 ; Serial: 737 ; Test Frequency: 2450 MHz

Communication System: CW ; Frequency: 2450 MHz; Duty Cycle: 1:1; Modulation type: CW
Medium: MSL2450;Medium parameters used: f = 2450 MHz; σ = 1.9 mho/m; ε_r = 53.7; ρ = 1000 kg/m^3 ;
Liquid level : 152 mm
Phantom section: Flat Section ; Separation distance : 10 mm (The feetpoint of the dipole to the Phantom)Air temp. : 23 degrees ; Liquid temp. : 22.6 degrees

DASY4 Configuration:
- Probe: EX3DV4 - SN3590 ; ConvF(8.2, 8.2, 8.2) ; Calibrated: 2010/3/25
- Sensor-Surface: 3mm (Mechanical Surface Detection)
- Electronics: DAE4 Sn861; Calibrated: 2010/1/22
- Phantom: SAM 12; Type: SAM V4.0; Serial: TP 1202
- Measurement SW: DASY4, V4.7 Build 80; Postprocessing SW: SEMCAD, V1.8 Build 186

d=10mm, Pin=250mW/Area Scan (5x7x1): Measurement grid: dx=15mm, dy=15mm
Maximum value of SAR (measured) = 17.6 mW/g

d=10mm, Pin=250mW/Zoom Scan (7x7x7)/Cube 0: Measurement grid: dx=5mm, dy=5mm, dz=5mm
Reference Value = 95.0 V/m; Power Drift = 0.018 dB
Peak SAR (extrapolated) = 28.9 W/kg
SAR(1 g) = 13.5 mW/g; SAR(10 g) = 6.12 mW/g

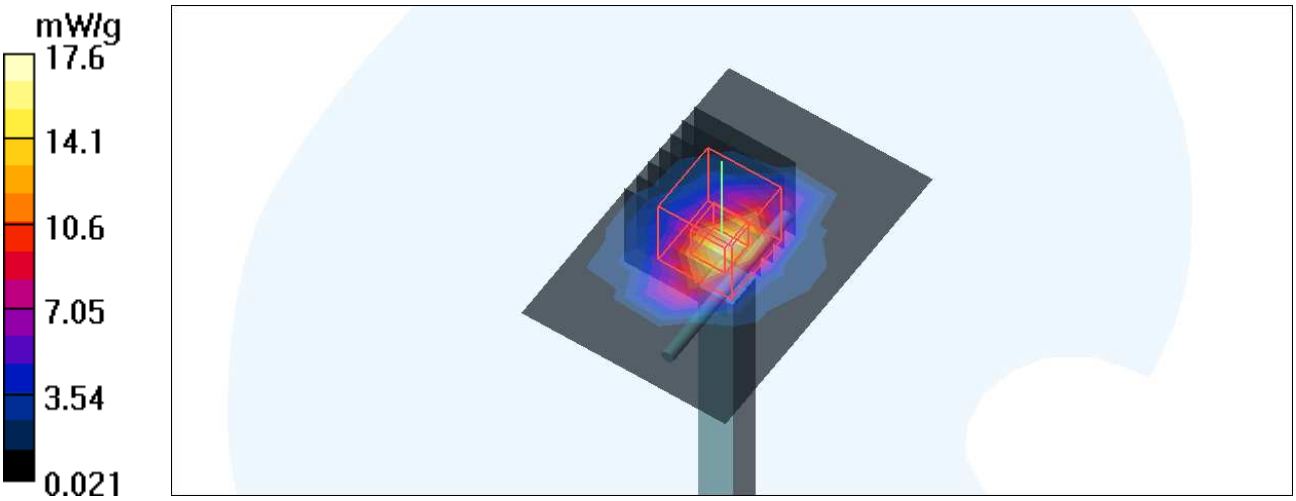

Date/Time: 2010/6/19 05:02:58

Test Laboratory: Bureau Veritas ADT

System Validation Check-MSL 2600MHz 6-19

DUT: Dipole 2600 MHz ; Type: D2600V2 ; Serial: 1020 ; Test Frequency: 2600 MHz

Communication System: CW ; Frequency: 2600 MHz; Duty Cycle: 1:1; Modulation type: CW
Medium: MSL2600;Medium parameters used: f = 2600 MHz; σ = 2.16 mho/m; ε_r = 52.4; ρ = 1000 kg/m^3 ; Liquid level : 152 mm
Phantom section: Flat Section ; Separation distance : 10 mm (The feetpoint of the dipole to the Phantom)Air temp. : 23 degrees ; Liquid temp. : 22.6 degrees

DASY4 Configuration:
- Probe: EX3DV4 - SN3590 ; ConvF(8.04, 8.04, 8.04) ; Calibrated: 2010/3/25
- Sensor-Surface: 3mm (Mechanical Surface Detection)
- Electronics: DAE4 Sn861; Calibrated: 2010/1/22
- Phantom: SAM 12; Type: SAM V4.0; Serial: TP 1202
- Measurement SW: DASY4, V4.7 Build 80; Postprocessing SW: SEMCAD, V1.8 Build 186

d=10mm, Pin=250mW/Area Scan (5x7x1): Measurement grid: dx=15mm, dy=15mm
Maximum value of SAR (measured) = 19.4 mW/g

d=10mm, Pin=250mW/Zoom Scan (7x7x7)/Cube 0: Measurement grid: dx=5mm, dy=5mm, dz=5mm
Reference Value = 92.6 V/m; Power Drift = -0.057 dB
Peak SAR (extrapolated) = 33.3 W/kg
SAR(1 g) = 14.2 mW/g; SAR(10 g) = 6.02 mW/g
Maximum value of SAR (measured) = 19.1 mW/g

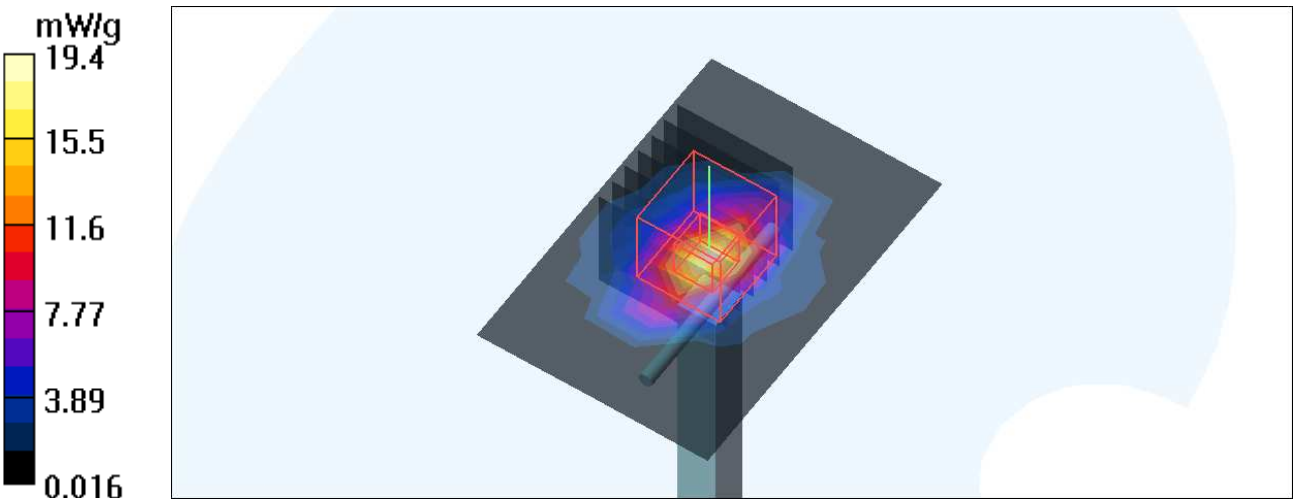

Date/Time: 2010/6/20 01:01:26

Test Laboratory: Bureau Veritas ADT

System Validation Check-MSL 2450MHz 6-20

DUT: Dipole 2450 MHz ; Type: D2450V2 ; Serial: 737 ; Test Frequency: 2450 MHz

Communication System: CW ; Frequency: 2450 MHz; Duty Cycle: 1:1; Modulation type: CW
Medium: MSL2450;Medium parameters used: f = 2450 MHz; σ = 1.89 mho/m; ε_r = 53.8; ρ = 1000 kg/m^3 ; Liquid level : 151 mm
Phantom section: Flat Section ; Separation distance : 10 mm (The feetpoint of the dipole to the Phantom)Air temp. : 23.1 degrees ; Liquid temp. : 22.8 degrees

DASY4 Configuration:
- Probe: EX3DV4 - SN3590 ; ConvF(8.2, 8.2, 8.2) ; Calibrated: 2010/3/25
- Sensor-Surface: 3mm (Mechanical Surface Detection)
- Electronics: DAE4 Sn861; Calibrated: 2010/1/22
- Phantom: SAM 12; Type: SAM V4.0; Serial: TP 1202
- Measurement SW: DASY4, V4.7 Build 80; Postprocessing SW: SEMCAD, V1.8 Build 186

d=10mm, Pin=250mW/Area Scan (5x7x1): Measurement grid: dx=15mm, dy=15mm
Maximum value of SAR (measured) = 17.5 mW/g

d=10mm, Pin=250mW/Zoom Scan (7x7x7)/Cube 0: Measurement grid: dx=5mm, dy=5mm, dz=5mm
Reference Value = 95.0 V/m; Power Drift = 0.013 dB
Peak SAR (extrapolated) = 28.7 W/kg
SAR(1 g) = 13.4 mW/g; SAR(10 g) = 6.06 mW/g
Maximum value of SAR (measured) = 17.4 mW/g

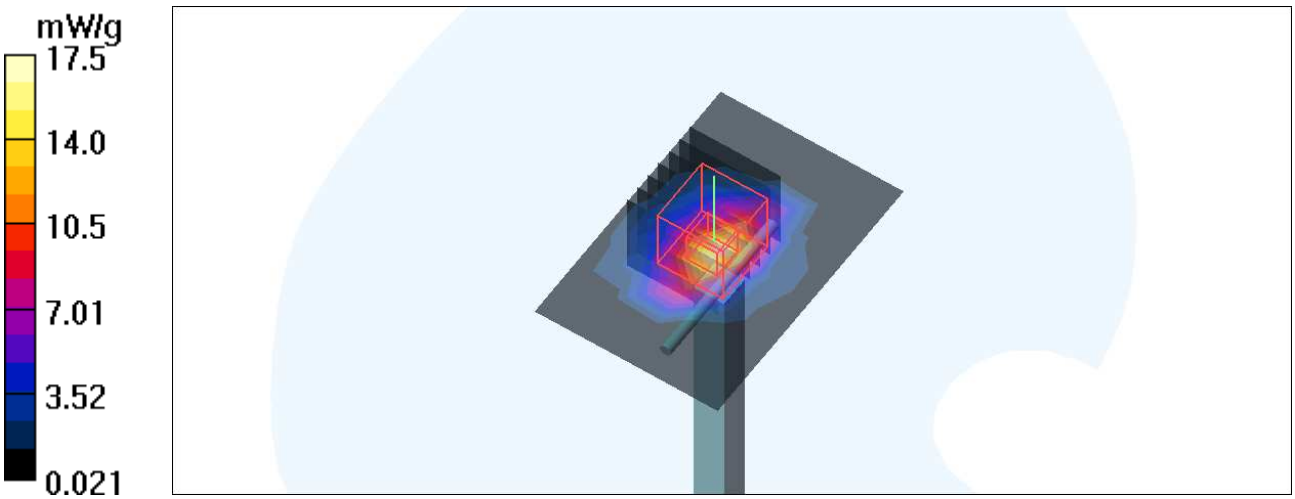

Date/Time: 2010/6/20 05:01:28

Test Laboratory: Bureau Veritas ADT

System Validation Check-MSL 2600MHz 6-20

DUT: Dipole 2600 MHz ; Type: D2600V2 ; Serial: 1020 ; Test Frequency: 2600 MHz

Communication System: CW ; Frequency: 2600 MHz; Duty Cycle: 1:1; Modulation type: CW
Medium: MSL2600;Medium parameters used: f = 2600 MHz; σ = 2.17 mho/m; ε_r = 52.5; ρ = 1000 kg/m^3 ; Liquid level : 151 mm
Phantom section: Flat Section ; Separation distance : 10 mm (The feetpoint of the dipole to the Phantom)Air temp. : 23.1 degrees ; Liquid temp. : 22.8 degrees

DASY4 Configuration:
- Probe: EX3DV4 - SN3590 ; ConvF(8.04, 8.04, 8.04) ; Calibrated: 2010/3/25
- Sensor-Surface: 3mm (Mechanical Surface Detection)
- Electronics: DAE4 Sn861; Calibrated: 2010/1/22
- Phantom: SAM 12; Type: SAM V4.0; Serial: TP 1202
- Measurement SW: DASY4, V4.7 Build 80; Postprocessing SW: SEMCAD, V1.8 Build 186

d=10mm, Pin=250mW /Area Scan (5x7x1): Measurement grid: dx=15mm, dy=15mm
Maximum value of SAR (measured) = 19.4 mW/g

d=10mm, Pin=250mW /Zoom Scan (7x7x7)/Cube 0: Measurement grid: dx=5mm, dy=5mm, dz=5mm
Reference Value = 91.8 V/m; Power Drift = -0.032 dB
Peak SAR (extrapolated) = 32.7 W/kg
SAR(1 g) = 14.1 mW/g; SAR(10 g) = 5.94 mW/g
Maximum value of SAR (measured) = 18.9 mW/g

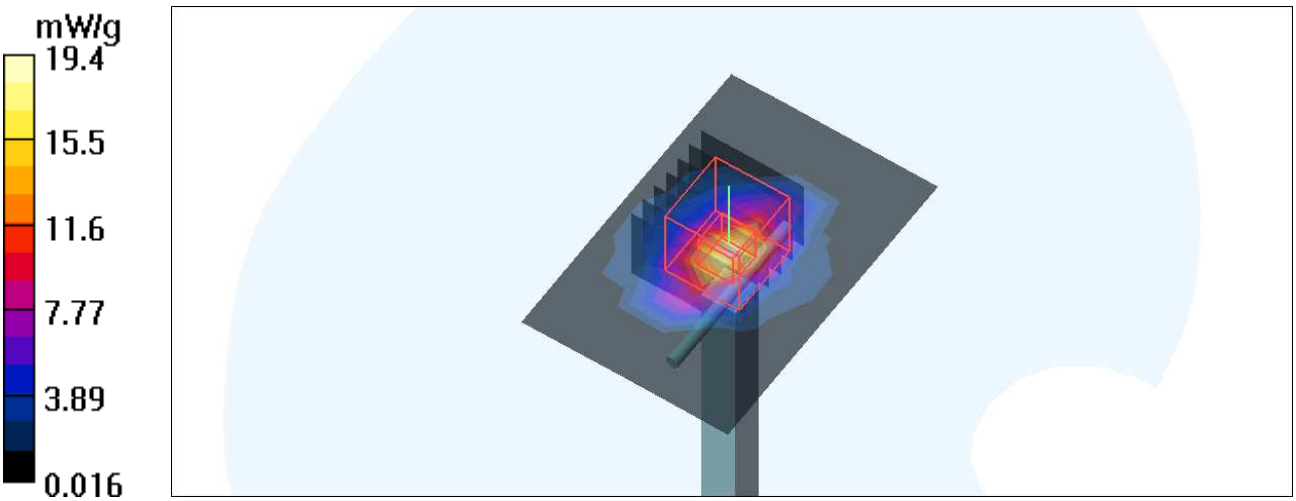

Date/Time: 2010/6/21 05:07:17

Test Laboratory: Bureau Veritas ADT

System Validation Check-MSL 2600MHz 6-21

DUT: Dipole 2600 MHz ; Type: D2600V2 ; Serial: 1020 ; Test Frequency: 2600 MHz

Communication System: CW ; Frequency: 2600 MHz; Duty Cycle: 1:1; Modulation type: CW
Medium: MSL2600;Medium parameters used: f = 2600 MHz; σ = 2.15 mho/m; ε_r = 52.3; ρ = 1000 kg/m^3 ; Liquid level : 154 mm
Phantom section: Flat Section ; Separation distance : 10 mm (The feetpoint of the dipole to the Phantom)Air temp. : 23 degrees ; Liquid temp. : 22.6 degrees

DASY4 Configuration:
- Probe: EX3DV4 - SN3590 ; ConvF(8.04, 8.04, 8.04) ; Calibrated: 2010/3/25
- Sensor-Surface: 3mm (Mechanical Surface Detection)
- Electronics: DAE4 Sn861; Calibrated: 2010/1/22
- Phantom: SAM 12; Type: SAM V4.0; Serial: TP 1202
- Measurement SW: DASY4, V4.7 Build 80; Postprocessing SW: SEMCAD, V1.8 Build 186

d=10mm, Pin=250mW/Area Scan (5x7x1): Measurement grid: dx=15mm, dy=15mm
Maximum value of SAR (measured) = 19.3 mW/g

d=10mm, Pin=250mW/Zoom Scan (7x7x7)/Cube 0: Measurement grid: dx=5mm, dy=5mm, dz=5mm
Reference Value = 91.8 V/m; Power Drift = -0.021 dB
Peak SAR (extrapolated) = 32.6 W/kg
SAR(1 g) = 14 mW/g; SAR(10 g) = 5.92 mW/g
Maximum value of SAR (measured) = 18.8 mW/g

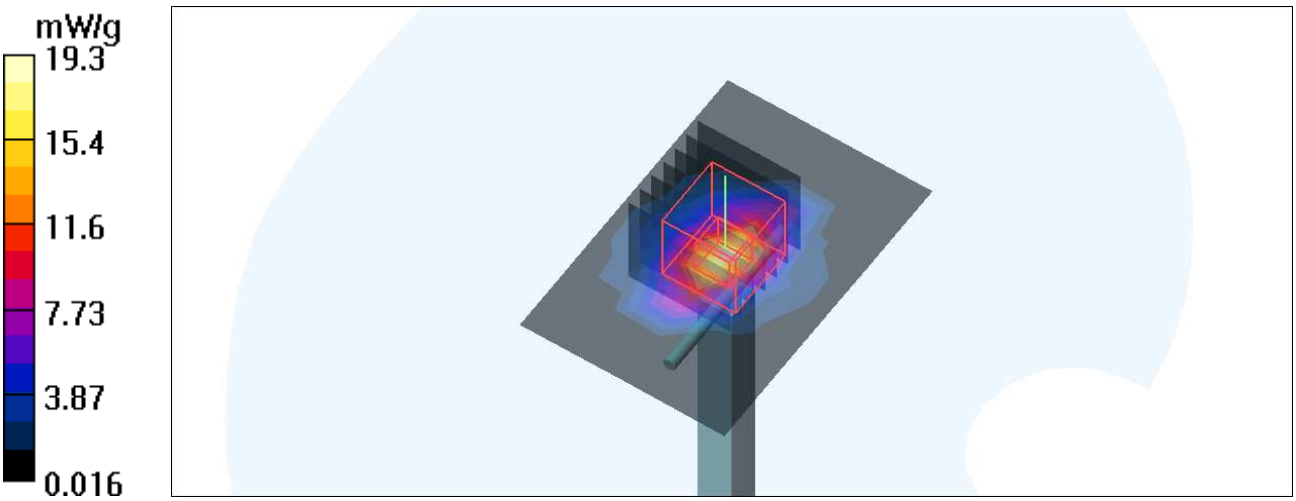

Date/Time: 2010/6/22 05:06:17

Test Laboratory: Bureau Veritas ADT

System Validation Check-MSL 2600MHz 6-22

DUT: Dipole 2600 MHz ; Type: D2600V2 ; Serial: 1020 ; Test Frequency: 2600 MHz

Communication System: CW ; Frequency: 2600 MHz; Duty Cycle: 1:1; Modulation type: CW
Medium: MSL2600;Medium parameters used: f = 2600 MHz; σ = 2.17 mho/m; ε_r = 52.1; ρ = 1000 kg/m^3 ; Liquid level : 152 mm
Phantom section: Flat Section ; Separation distance : 10 mm (The feetpoint of the dipole to the Phantom)Air temp. : 23.1 degrees ; Liquid temp. : 22.8 degrees

DASY4 Configuration:
- Probe: EX3DV4 - SN3590 ; ConvF(8.04, 8.04, 8.04) ; Calibrated: 2010/3/25
- Sensor-Surface: 3mm (Mechanical Surface Detection)
- Electronics: DAE4 Sn861; Calibrated: 2010/1/22
- Phantom: SAM 12; Type: SAM V4.0; Serial: TP 1202
- Measurement SW: DASY4, V4.7 Build 80; Postprocessing SW: SEMCAD, V1.8 Build 186

d=10mm, Pin=250mW/Area Scan (5x7x1): Measurement grid: dx=15mm, dy=15mm
Maximum value of SAR (measured) = 19.6 mW/g

d=10mm, Pin=250mW/Zoom Scan (7x7x7)/Cube 0: Measurement grid: dx=5mm, dy=5mm, dz=5mm
Reference Value = 92.6 V/m; Power Drift = -0.016 dB
Peak SAR (extrapolated) = 33.6 W/kg
SAR(1 g) = 14.4 mW/g; SAR(10 g) = 6.07 mW/g
Maximum value of SAR (measured) = 19.3 mW/g

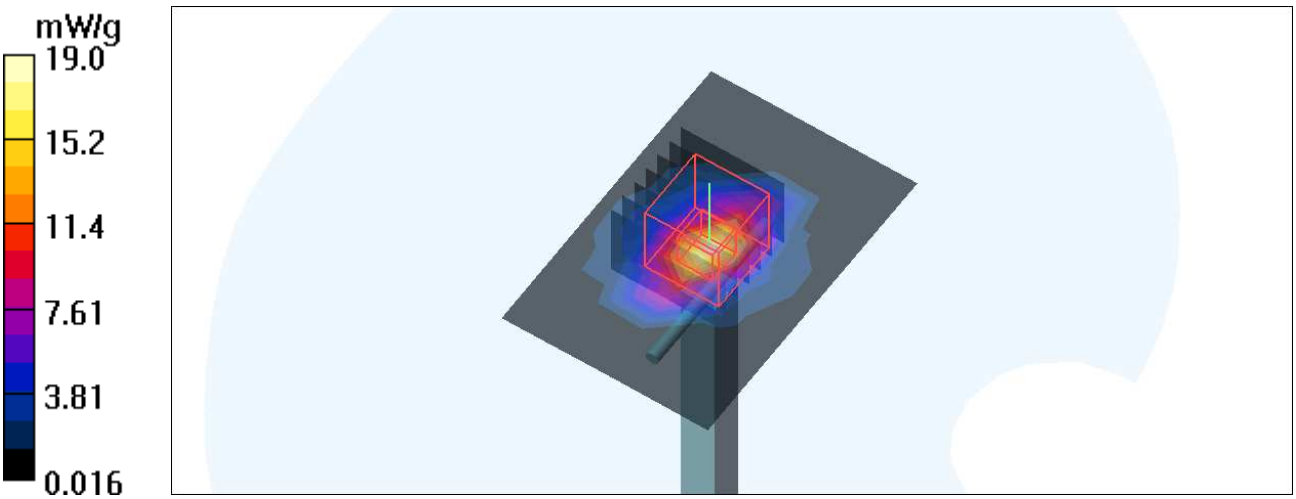

Date/Time: 2010/6/23 05:06:58

Test Laboratory: Bureau Veritas ADT

System Validation Check-MSL 2600MHz 6-23

DUT: Dipole 2600 MHz ; Type: D2600V2 ; Serial: 1020 ; Test Frequency: 2600 MHz

Communication System: CW ; Frequency: 2600 MHz; Duty Cycle: 1:1; Modulation type: CW
Medium: MSL2600;Medium parameters used: f = 2600 MHz; σ = 2.16 mho/m; ε_r = 52.2; ρ = 1000 kg/m^3 ; Liquid level : 151 mm
Phantom section: Flat Section ; Separation distance : 10 mm (The feetpoint of the dipole to the Phantom)Air temp. : 23 degrees ; Liquid temp. : 22.6 degrees

DASY4 Configuration:
- Probe: EX3DV4 - SN3590 ; ConvF(8.04, 8.04, 8.04) ; Calibrated: 2010/3/25
- Sensor-Surface: 3mm (Mechanical Surface Detection)
- Electronics: DAE4 Sn861; Calibrated: 2010/1/22
- Phantom: SAM 12; Type: SAM V4.0; Serial: TP 1202
- Measurement SW: DASY4, V4.7 Build 80; Postprocessing SW: SEMCAD, V1.8 Build 186

d=10mm, Pin=250mW/Area Scan (5x7x1): Measurement grid: dx=15mm, dy=15mm
Maximum value of SAR (measured) = 19.3 mW/g

d=10mm, Pin=250mW/Zoom Scan (7x7x7)/Cube 0: Measurement grid: dx=5mm, dy=5mm, dz=5mm
Reference Value = 92.6 V/m; Power Drift = -0.027 dB
Peak SAR (extrapolated) = 33.1 W/kg
SAR(1 g) = 14.2 mW/g; SAR(10 g) = 5.99 mW/g
Maximum value of SAR (measured) = 19.0 mW/g

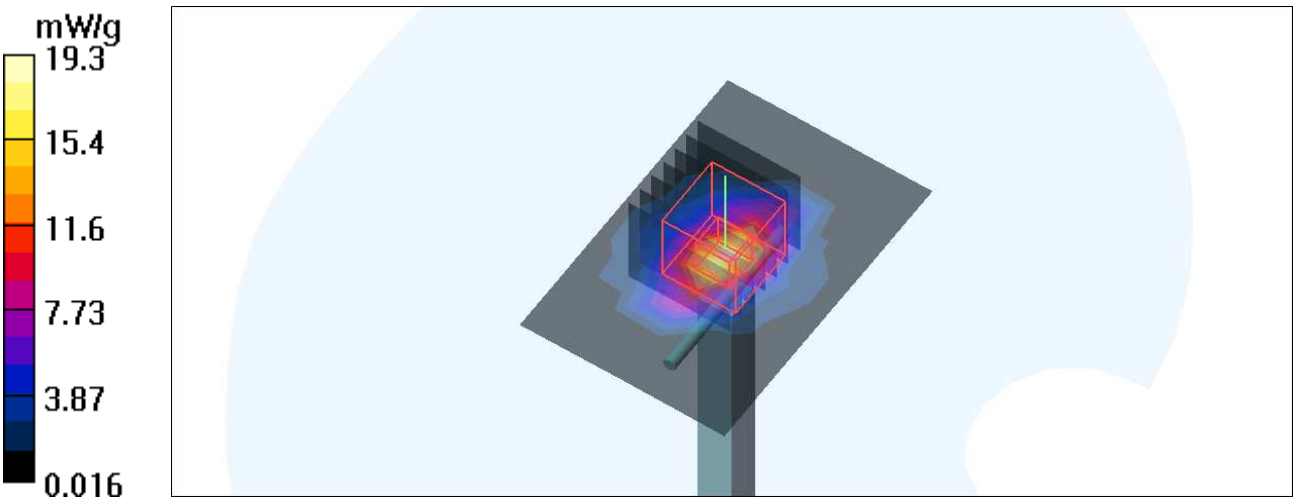

APPENDIX B: BV ADT SAR MEASUREMENT SYSTEM
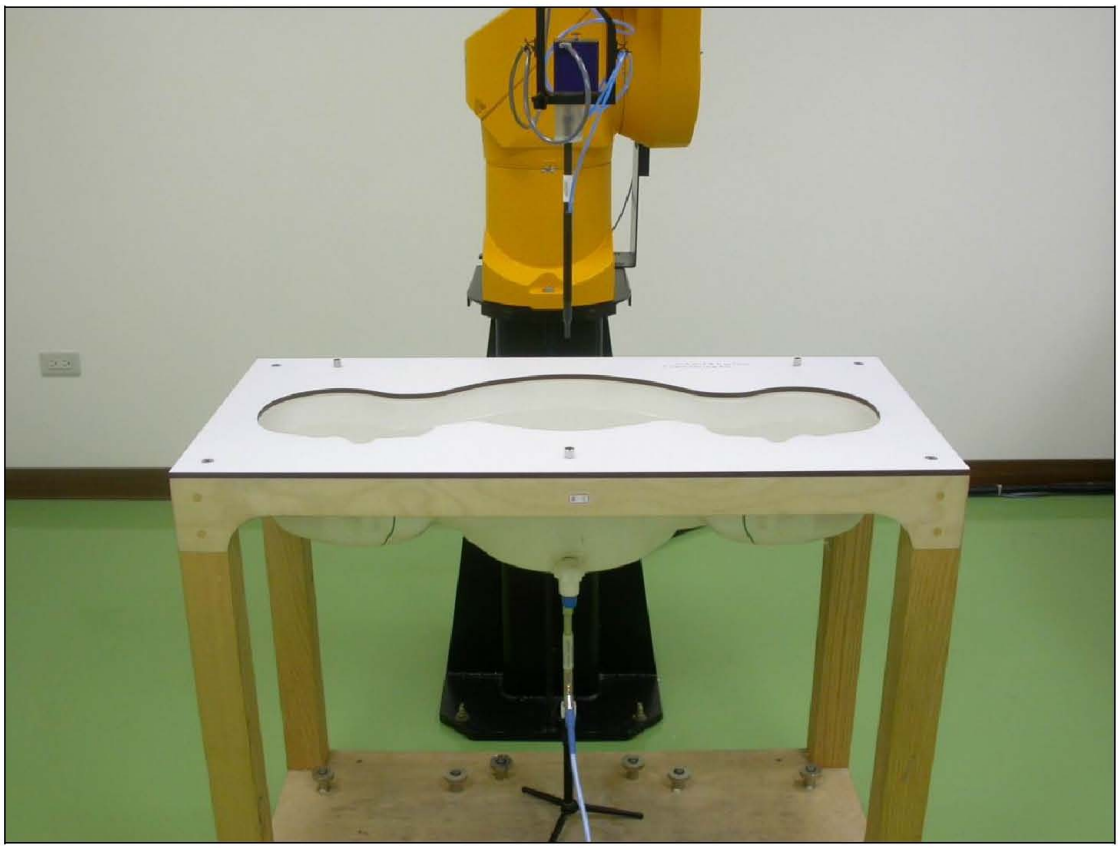
APPENDIX C: PHOTOGRAPHS OF SYSTEM VALIDATION