1736/1738

Power Logger

Users Manual

September 2015

© 2015 Fluke Corporation. All rights reserved. Specifications are subject to change without notice.
All product names are trademarks of their respective companies.

LIMITED WARRANTY AND LIMITATION OF LIABILITY

Each Fluke product is warranted to be free from defects in material and workmanship under normal use and service. The warranty period is two years and begins on the date of shipment. Parts, product repairs, and services are warranted for 90 days. This warranty extends only to the original buyer or end-user customer of a Fluke authorized reseller, and does not apply to fuses, disposable batteries, or to any product which, in Fluke's opinion, has been misused, altered, neglected, contaminated, or damaged by accident or abnormal conditions of operation or handling. Fluke warrants that software will operate substantially in accordance with its functional specifications for 90 days and that it has been properly recorded on non-defective media. Fluke does not warrant that software will be error free or operate without interruption.

Fluke authorized resellers shall extend this warranty on new and unused products to end-user customers only but have no authority to extend a greater or different warranty on behalf of Fluke. Warranty support is available only if product is purchased through a Fluke authorized sales outlet or Buyer has paid the applicable international price. Fluke reserves the right to invoice Buyer for importation costs of repair/replacement parts when product purchased in one country is submitted for repair in another country.

Fluke's warranty obligation is limited, at Fluke's option, to refund of the purchase price, free of charge repair, or replacement of a defective product which is returned to a Fluke authorized service center within the warranty period.

To obtain warranty service, contact your nearest Fluke authorized service center to obtain return authorization information, then send the product to that service center, with a description of the difficulty, postage and insurance prepaid (FOB Destination). Fluke assumes no risk for damage in transit. Following warranty repair, the product will be returned to Buyer, transportation prepaid (FOB Destination). If Fluke determines that failure was caused by neglect, misuse, contamination, alteration, accident, or abnormal condition of operation or handling, including overvoltage failures caused by use outside the product's specified rating, or normal wear and tear of mechanical components, Fluke will provide an estimate of repair costs and obtain authorization before commencing the work. Following repair, the product will be returned to the Buyer transportation prepaid and the Buyer will be billed for the repair and return transportation charges (FOB Shipping Point).

THIS WARRANTY IS BUYER'S SOLE AND EXCLUSIVE REMEDY AND IS IN LIEU OF ALL OTHER WARRANTIES, EXPRESS OR IMPLIED, INCLUDING BUT NOT LIMITED TO ANY IMPLIED WARRANTY OF MERCHANTABILITY OR FITNESS FOR A PARTICULAR PURPOSE. FLUKE SHALL NOT BE LIABLE FOR ANY SPECIAL, INDIRECT, INCIDENTAL OR CONSEQUENTIAL DAMAGES OR LOSSES, INCLUDING LOSS OF DATA, ARISING FROM ANY CAUSE OR THEORY.

Since some countries or states do not allow limitation of the term of an implied warranty, or exclusion or limitation of incidental or consequential damages, the limitations and exclusions of this warranty may not apply to every buyer. If any provision of this Warranty is held invalid or unenforceable by a court or other decision-maker of competent jurisdiction, such holding will not affect the validity or enforceability of any other provision.

Fluke Corporation	Fluke Europe B.V.
P.O. Box 9090	P.O. Box 1186
Everett, WA 98206-9090	5602 BD Eindhoven
U.S.A.	The Netherlands

11/99

To register your product online, visit register.fluke.com.

Table of Contents

Title	Page
Introduction	1
How to Contact Fluke	2
Safety Information	2
Before You Start	5
WiFi and WiFi/BLE-to-USB Adapter	6
Magnet Hanger Kit	7
Voltage Test Leads	7
Thin-Flexi Current Probe	8
Kensington Lock	9
Accessories	10
Storage	11
Tilt Stand	11
Power Supply	11
How to Charge Battery	12
Navigation and User Interface	13
Applying the Connector Panel Decal	15
Power ON/OFF	16
Mains Power Source	16
Measurement Line Power Source	16
Power from Battery	17
Touch Screen	18
Brightness Button	18
Calibration	18
Basic Navigation	18

Function Selection Buttons 19
Meter 19
Live Trend 19
Scope 19
Harmonics 19
Measurement Configuration 20
Connection Verification and Correction 30
Power 31
Logger 32
Memory/Settings Button 42
Logging Sessions 42
Screen Capture 43
Instrument Settings 43
Status Information 46
Firmware Version 46
Touch Screen Calibration 46
WiFi Configuration 46
Copy Service Data to USB 47
Reset to Factory Defaults 47
Firmware Update 47
First-time Use/Setup Wizard 48
First Measurements 49
Licensed Features 51
WiFi Infrastructure 51
1736/Upgrade 51
IEEE 519/Report 52
License Activation 52
Maintenance 53
How to Clean 53
Battery Replacement 53
Calibration 54
Service and Parts 54

Energy Analyze Plus Software 56
System Requirements 56
PC Connections 57
WiFi Support 57
WiFi Setup 57
WiFi Direct Connection 58
WiFi-Infrastructure 58
Remote Control 59
Wireless Access to PC Software 59
Fluke Connect™ Wireless System 60
Fluke Connect App 60
Wiring Configurations 61
V, A, Hz, + ... 61
Power 63
Glossary 64
General Specifications 65
Environmental Specifications 65
Electrical Specifications 67

List of Tables

Table	Title	Page
1.	Symbols	4
2.	Accessories	10
3.	Front Panel	13
4.	Connector Panel	14
5.	Power/Battery Status	17
6.	Optional License Features	51
7.	Replacement Parts	54
8.	VNC Clients	59
9.	i40s-EL Setup	75

List of Figures

Figure	Title	Page
1.	Country-Specific Mains Power Cable	5
2.	Adapter Installation	6
3.	Magnet Hanger Kit	7
4.	R-Coil Operation Principle	8
5.	Test Leads with Color Coding	9
6.	Power Supply and Battery	11
7.	Decal for Connector Panel	15
8.	Characteristics of a Voltage Swell	40
9.	Characteristics of a Voltage Dip	40
10.	Characteristics of a Voltage Interruption	41
11.	Inrush Characteristics and Relation with Start Menu	42
12.	Replacement Parts	55
13.	Power Logger to PC Connections	57
14.	iFlex Probe Window	74

Introduction

The 1736 and 1738 Power Loggers (the Logger or Product) is a compact device for energy and power quality surveys. With a built-in touch screen and USB flash drive support, it is easy to configure, verify, and download measurement sessions without the need of a computer at the measurement location. All illustrations in this manual show the 1738.

The Logger makes these measurements:

- **Basic Measurements**: Voltage (V), Current (A), Frequency (Hz), Phase rotation indication, 2 dc channels (supports user-supplied external sensor for other measurements such as temperature, humidity, and air speed)
- **Power**: Active Power (W), Apparent Power (VA), Non-active Power, (var), Power Factor
- **Fundamental Power**: Fundamental Active Power (W), Fundamental Apparent Power (VA), Fundamental Reactive Power (var), DPF (CosΦ)
- **Energy**: Active Energy (Wh), Apparent Energy (VAh), Non-active Energy (varh)
- **Demand**: Demand (Wh), Maximum Demand (Wh), Energy costs
- **Harmonics**: Harmonic components up to and including the 50th and Total Harmonic Distortion of Voltage and Current

Fluke software, *Energy Analyze Plus*, is included with the Product for a thorough energy analysis and professional report of the measurement results.

How to Contact Fluke

To contact Fluke, use one of these telephone numbers:

- USA: 1-800-760-4523
- Canada: 1-800-36-FLUKE (1-800-363-5853)
- Europe: +31 402-675-200
- Japan: +81-3-6714-3114
- Singapore: +65-6799-5566
- Anywhere in the world: +1-425-446-5500

Or, visit Fluke's website at www.fluke.com.

To register your Product, visit http://register.fluke.com.

To view, print, or download the latest manual supplement, visit http://us.fluke.com/usen/support/manuals.

Safety Information

A **Warning** identifies hazardous conditions and procedures that are dangerous to the user. A **Caution** identifies conditions and procedures that can cause damage to the Product or the equipment under test.

⚠⚠ Warning

To prevent possible electrical shock, fire, or personal injury:

- **Read all safety information before you use the Product.**
- **Use the Product only as specified, or the protection supplied by the Product can be compromised.**
- **Comply with local and national safety codes. Use personal protective equipment (approved rubber gloves, face protection, and flame-resistant clothes) to prevent shock and arc blast injury where hazardous live conductors are exposed.**
- **Examine the case before you use the Product. Look for cracks or missing plastic. Carefully look at the insulation around the terminals.**
- **Replace the mains power cord if the insulation is damaged or if the insulation shows signs of wear.**

- **Use Product-approved measurement category (CAT), voltage, and amperage rated accessories (probes, test leads, and adapters) for all measurements.**
- **Do not use test leads if they are damaged. Examine the test leads for damaged insulation and measure a known voltage.**
- **Do not use the Product if it is damaged.**
- **The battery door must be closed and locked before you operate the Product.**
- **Do not work alone.**
- **Use this Product indoors only.**
- **Do not use the Product around explosive gas, vapor, or in damp or wet environments.**
- **Use only the external mains power supply included with the Product.**
- **Do not exceed the Measurement Category (CAT) rating of the lowest rated individual component of a Product, probe, or accessory.**
- **Keep fingers behind the finger guards on the probes.**
- **Do not use a current measurement as an indication that a circuit is safe to touch. A voltage measurement is necessary to know if a circuit is hazardous.**
- **Do not touch voltages >30 V ac rms, 42 V ac peak, or 60 V dc.**
- **Do not apply more than the rated voltage, between the terminals or between each terminal and earth ground.**
- **Measure a known voltage first to make sure that the Product operates correctly.**
- **De-energize the circuit or wear personal protective equipment in compliance with local requirements before you apply or remove the flexible current probe.**
- **Remove all probes, test leads, and accessories before the battery door is opened.**
- **Do not use USB accessories when the Product is installed in environment with wires or exposed metal parts with hazardous live voltage such as in cabinets.**
- **Do not operate the touch screen with sharp objects**
- **Do not use the Product if the protection film on the touch panel is damaged.**
- **Do not touch the metal parts of one test lead when the other is still connected to hazardous voltage.**

Table 1 is a list of symbols used on the Product or in this manual.

Table 1. Symbols

Symbol	Description	Symbol	Description
	Consult user documentation.		Conforms to relevant South Korean EMC standards.
	WARNING. RISK OF DANGER.		Conforms to relevant Australian EMC standards.
	WARNING. HAZARDOUS VOLTAGE. Risk of electric shock.		Certified by CSA Group to North American safety standards.
	Earth		Conforms to European Union directives.
	Battery		Double Insulated
CAT II	Measurement Category II is applicable to test and measuring circuits connected directly to utilization points (socket outlets and similar points) of the low-voltage MAINS installation.		
CAT III	Measurement Category III is applicable to test and measuring circuits connected to the distribution part of the building's low-voltage MAINS installation.		
CAT IV	Measurement Category IV is applicable to test and measuring circuits connected at the source of the building's low-voltage MAINS installation.		
Li-ion	This product contains a Lithium-ion battery. Do not mix with the solid waste stream. Spent batteries should be disposed of by a qualified recycler or hazardous materials handler per local regulations. Contact your authorized Fluke Service Center for recycling information.		
	This product complies with the WEEE Directive marking requirements. The affixed label indicates that you must not discard this electrical/electronic product in domestic household waste. Product Category: With reference to the equipment types in the WEEE Directive Annex I, this product is classed as category 9 "Monitoring and Control Instrumentation" product. Do not dispose of this product as unsorted municipal waste.		

Before You Start

Below is a list of the items included with your purchase. Carefully unpack and inspect each of the items:

- 173x Power Logger
- Power Supply
- Voltage Test Lead, 3-phase + N
- 4x Dolphin Clips, Black
- 4x i173x-flex1500 Thin-Flexi Current Probe, 30.5 cm (12 in)
- Set of color-coded Wire Clips
- Mains Power Cable (see Figure 1)
- Set of 2 test leads with stackable plugs, 10 cm (3.9 in)
- Set of 2 test leads with stackable plugs, 1.5 m (6.6 ft)
- DC Power Cable
- USB Cable A, Mini-USB
- Soft Storage Bag/Case
- Input Connector Decal (see Figure 7)
- The power cord and input connector decal are country-specific and vary according to the order destination.
- Documentation Info Pack (Quick Reference Card, Safety Information, Battery Pack Safety Information, iFlex Probe Safety Information)
- 4 GB USB Flash Drive (includes Users Manual and PC application software, Fluke Energy Analyze Plus)

The 1738 Power Logger also includes these items in the standard purchase list:

- WiFi/BLE to USB Adapter
- Magnet Hanger Kit
- Set of 4 Magnet Probes for 4 mm Banana Plugs

These items are available for the 1736 Power Logger as optional accessories.

Note

The WiFi/BLE adapter is included only when the radio certification is available for your country. Check www.fluke.com for availability in your country.

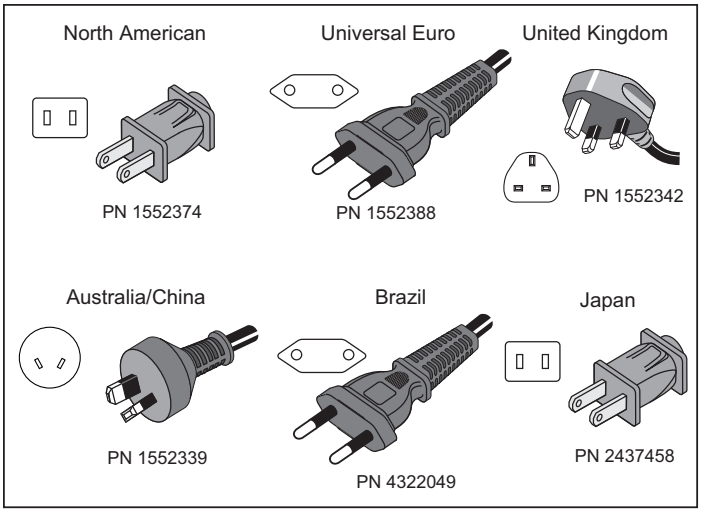

hcf059.eps

Figure 1. Country-Specific Mains Power Cable

WiFi and WiFi/BLE-to-USB Adapter

The USB adapter enables the wireless connectivity of the Logger:

- Connection to the Fluke Connect™ smartphone app for easy asset management and data sharing.
- Data transfer to "Energy Analyze Plus" PC software.
- Remote control via Virtual Network Computing (VNC). See *Remote Control* for more information about VNC.
- Display and store data of up to 2 modules of the Fluke FC 3000 series together with the instrument data into logging sessions (requires WiFi/BLE adapter feature, available with firmware version 2.0).

To install the adapter (see Figure 2) in the Logger:

1. Remove the Power Supply.
2. Unscrew the four screws and remove the battery door.
3. Remove the battery.
4. Insert the WiFi/BLE adapter in the compartment with the serial number pointing upwards.
5. Connect the WiFi/BLE adapter to the USB port by sliding it gently to the right until the adapter snaps into the USB socket of the Logger. About 3.5 mm (0.14 in.) of the metal shield should be visible.
6. Insert the battery.
7. Fasten the battery door.

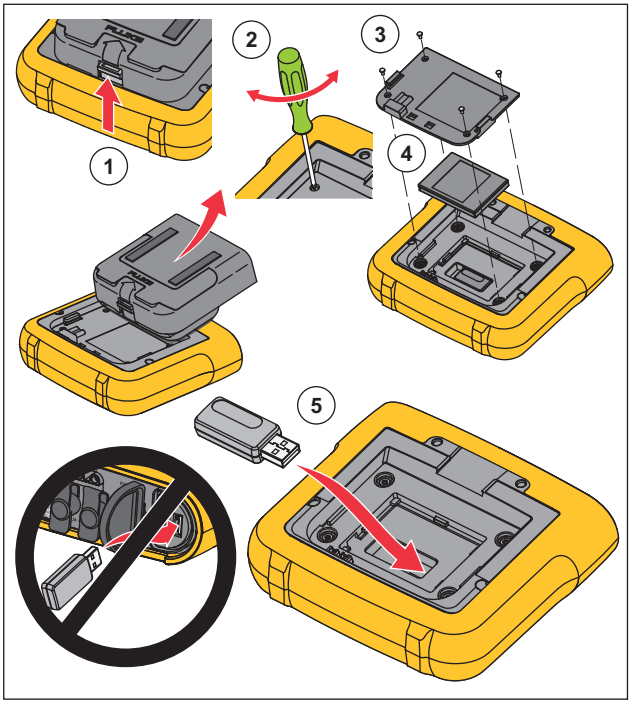

hcf069.eps

Figure 2. Adapter Installation

Magnet Hanger Kit

The accessory shown in Figure 3 is used to:

- Hang the Logger with power supply attached (use two magnets)
- Hang the Logger separately (use two magnets)
- Hang the power supply separately (use one magnet)

Voltage Test Leads

Voltage test leads are four-core, flat, test leads that do not tangle and can be installed in tight spaces. On installations where the access to Neutral is out of reach with the three-phase test lead, use the black test lead to extend the Neutral lead.

For single phase measurements use the red and black test leads.

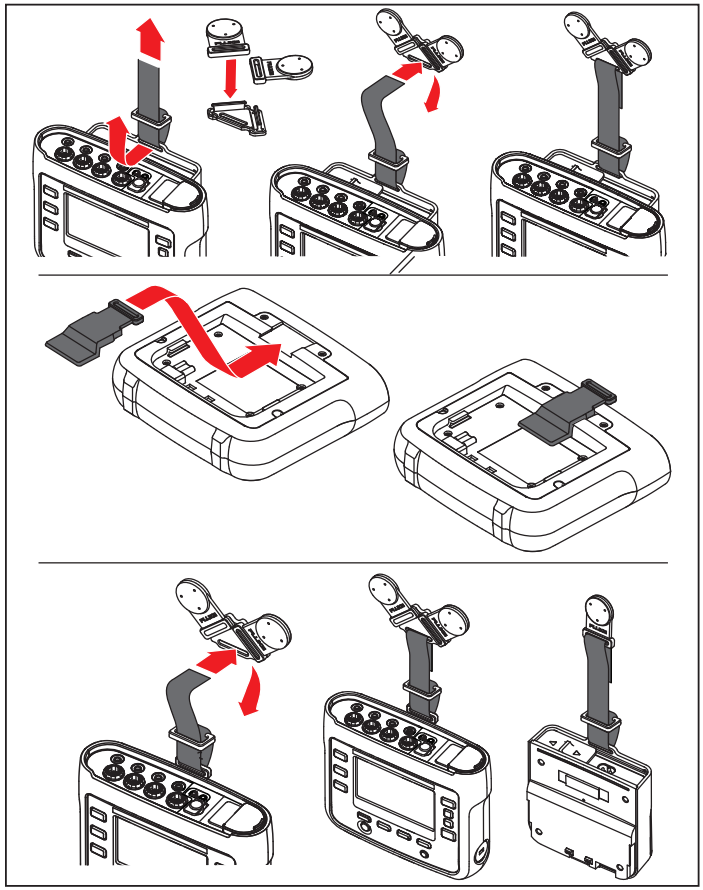

hcf058.eps

Figure 3. Magnet Hanger Kit

Thin-Flexi Current Probe

The Thin-Flexi Current Probe works on the Rogowski coil (R-coil) principle that is a toroid of wire used to measure an alternating current through a wire encircled by the toroid. See Figure 4.

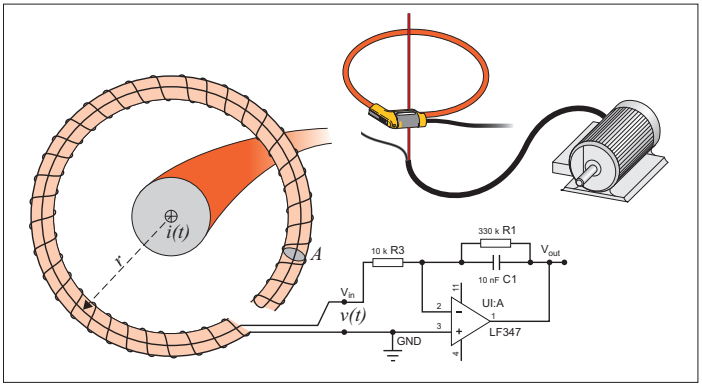

hcf028.eps

Figure 4. R-Coil Operation Principle

The R-coil has many advantages over other types of current transformers:

- It is not a closed loop. The second terminal is passed back through the center of the toroid core (commonly a plastic or rubber tube) and connected along the first terminal. This allows the coil to be open-ended, flexible, and able to be wrapped around a live conductor without disturbing it.
- It has an air core rather than an iron core. It has a low inductance and can respond to fast-changing currents.
- Because it has no iron core to saturate, it is highly linear even when subjected to large currents, such as those used in electric power transmission or pulsed-power applications.

A correctly formed R-coil, with equally spaced windings, is largely immune to electromagnetic interference.

Use the color clips for easy identification of the four current probes. Apply the clips that are appropriate for your local wiring codes on both ends of the current probe cable. See Figure 5.

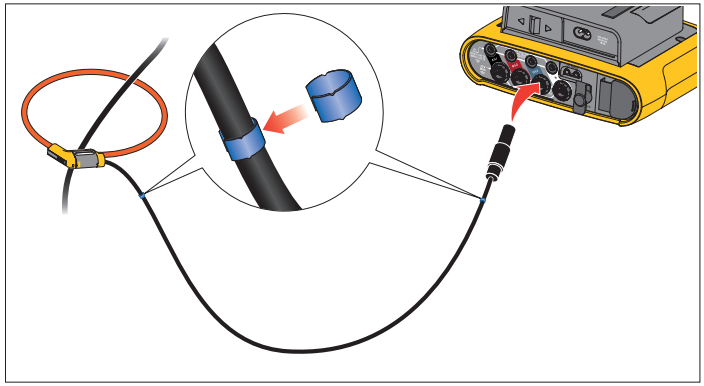

hcf025.eps

Figure 5. Test Leads with Color Coding

Kensington Lock

A Kensington Security Slot (also called a K-Slot or Kensington lock) is part of a built-in anti-theft system. It is a small, metal-reinforced, oval hole found on the right side of the Logger (see item 6 in Table 3). It is used for attaching a lock-and-cable apparatus. The lock is secured in place with a key or combination lock attached to a plastic-cover metal cable. The end of the cable has a small loop that allows the cable to be looped around a permanent object, such as a cabinet door, to secure it in place. This lock is available from most electronics and computer suppliers.

Accessories

Table 2 is a list of the accessories that are available and sold separately for the Logger. The warranty on included accessories is 1 year. For the most up-to-date information on accessories, go to www.fluke.com.

Table 2. Accessories

Part ID	Description
i17xx-flex 1500	Thin-Flexi Current Probe (single) 1500 A, 30.5 cm (12 in.)
i17xx-flex 1500/3PK	Set of 3 Thin-Flexi Current Probes
i17xx-flex 1500/4PK	Set of 4 Thin-Flexi Current Probes
i17xx-flex 3000	Thin-Flexi Current Probe (single) 3000 A, 61 cm (24 in)
i17xx-flex 3000/3PK	Set of 3 Thin-Flexi Current Probes
i17xx-flex 3000/4PK	Set of 4 Thin-Flexi Current Probes
i17xx-flex 6000	Thin-Flexi Current Probe (single) 6000 A 90.5 cm (36 in)
i17xx-flex 6000/3PK	Set of 3 Thin-Flexi Current Probes
i17xx-flex 6000/4PK	Set of 4 Thin-Flexi Current Probes
Fluke-17xx Test Lead	0.1 m Test Lead
Fluke-17xx Test Lead	1.5 m Test Lead
3PHVL-1730	Voltage Test Lead 3-phase + N
i40s-EL Current Clamp	40 A (single) Current Clamp
i40s-EL/3PK	Set of 3 Current Clamps, 40 A
Fluke-1730-Hanger Kit	Hanger Kit
173x AUX Input Adapter	Lithium-ion Battery
C17xx	Soft Case
FLUKE-1736/UPGRADE	Upgrade Kit for 1736 to 1738 (includes: Hanger, Magnet Probes, 1736 to 1738 Upgrade Kit, and Software License)
IEEE 519/REPORT	Software License for IEEE 519 Reporting
FLK-WIFI/BLE	WiFi/BLE to USB Adapter
MP1-MAGNET PROBE 1	Set of 4 Magnet Probes for 4 mm banana plugs

Storage

When not in use, keep the Logger in the protective storage bag/case. The bag/case has sufficient space for the Logger and all the accessories.

If the Logger is stored for an extended period of time or is not in use for a long time, you should charge the battery at least once every six months.

Tilt Stand

The power supply includes a tilt stand. When used, the tilt stand positions the display at a good angle for use on a tabletop surface. To use, attach the power supply to the Logger and open the tilt stand.

Power Supply

The Logger includes a removable power supply, see Figure 6. The power supply is either attached to the Logger or used externally with a dc power cable. The configuration with the externally connected power supply is preferred in locations where the Logger with the power supply attached is too big to fit in a cabinet between the door and panel.

When the power supply is connected with the Logger and connected to line power, it:

- converts line power to dc power and is used directly by the Logger
- automatically turns on the Logger and continuously powers the Logger from the external source (after initial power on, the power button turns on and turns off the Logger)
- recharges the battery

The power cord/measurement line cover slides to select the input source.

⚠⚠ Warning

To prevent possible electrical shock, fire, or personal injury, do not use the power supply if the mains power cable/measurement line slide-cover is missing.

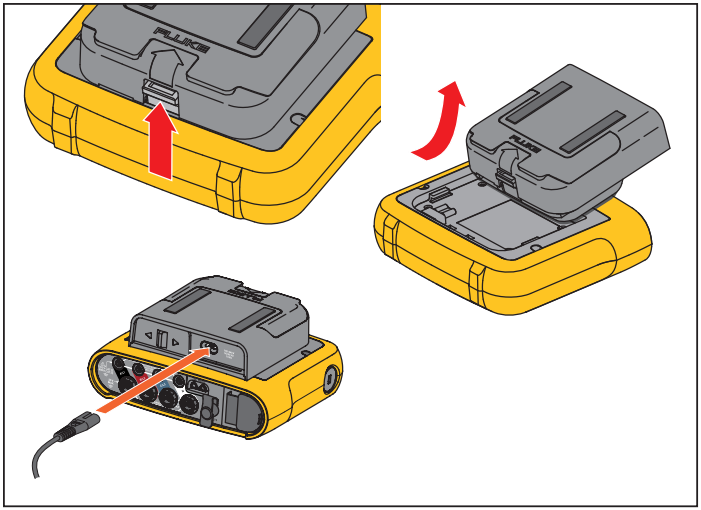

hcf031.eps

Figure 6. Power Supply and Battery

How to Charge Battery

The Logger also operates on an internal rechargeable Lithium-ion battery. After you unpack and inspect the Logger, fully charge the battery before first use. Afterwards, charge the battery when the battery icon on the screen indicates that power is low. The battery automatically charges when the Logger is connected to the mains power. The Logger continues to charge when turned off and connected to mains power.

Note

The battery charge is faster when the Logger is turned off.

To charge the battery:

1. Connect the mains cord to the ac input socket on the power supply.
2. Fit the power supply to the Logger or use the dc power cord to connect the power supply to the Logger.
3. Connect to mains power.

⚠ Caution

To prevent damage to the Product:

- **Do not leave batteries unused for extended periods of time, either in the product or in storage.**
- **When a battery has not been used for six months, check the charge status and charge the battery as appropriate.**
- **Clean battery packs and contacts with a clean, dry cloth.**
- **Battery packs must be charged before use.**
- **After extended storage, it can be necessary to charge and discharge a battery pack to obtain maximum performance.**
- **Dispose properly.**

Note

- *Li-ion batteries keep a charge longer if stored at room temperature.*
- *The clock resets when the battery is completely discharged.*
- *When the Logger shuts off because of low battery, enough battery capacity is available to back up the real-time clock for up to 2 months.*

Navigation and User Interface

See Table 3 for a list of the front panel controls and their functions. See Table 4 for a list of the connectors and their functions.

Table 3. Front Panel

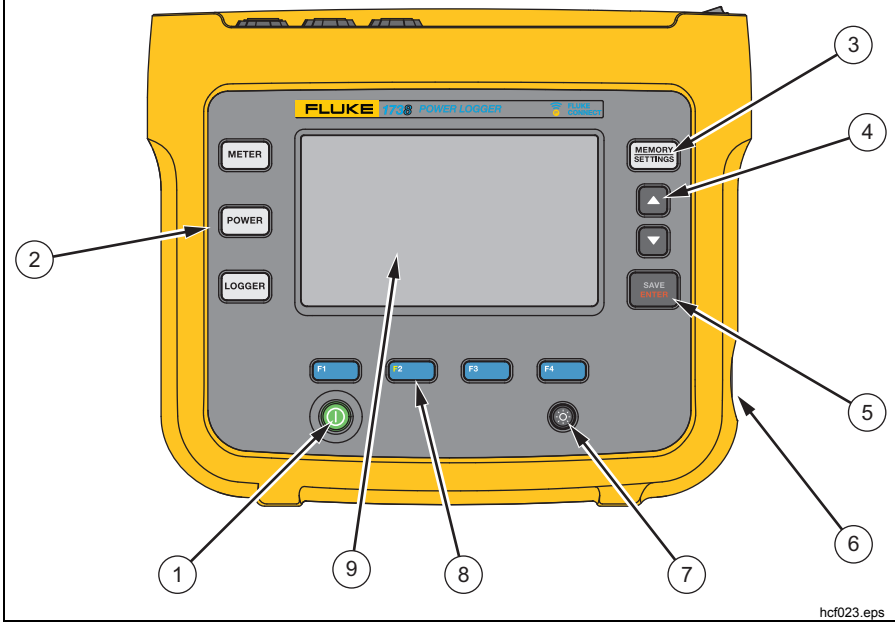

Item	Control	Description
1	⏻	Power on/off and status
2	METER POWER LOGGER	Meter, Power, or Logger function selection
3	MEMORY SETTINGS	Memory/Setup selection
4	▲▼	Cursor control
5	SAVE ENTER	Selection control
6	Kensington lock	
7	☼	Backlight on/off
8	F1 F2 F3 F4	Softkey selection
9	Touch screen display	

Table 4. Connector Panel

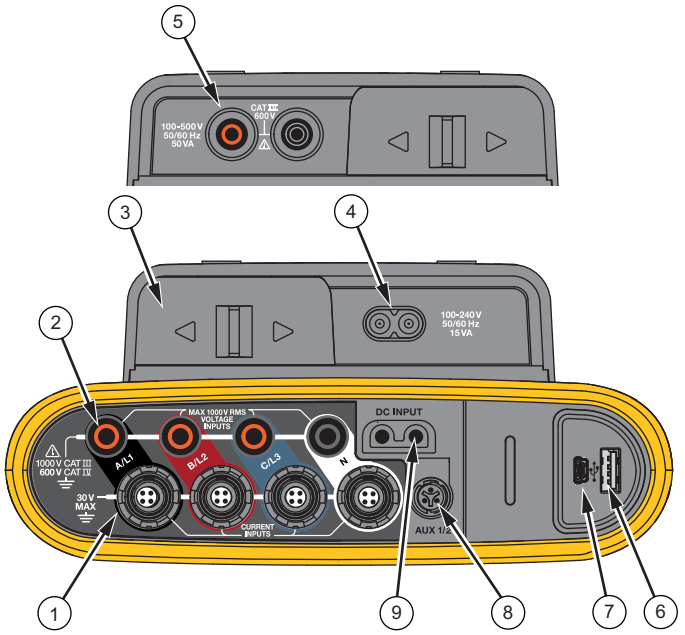

hcf021.eps

Item	Description
1	Current measurement inputs (3 phases + N)
2	Voltage measurement inputs (3 phases + N)
3	Power Cord/Measurement Line Slide-Cover
4	Power Cord AC Input 100-240 V 50/60 Hz 15 VA
5	Measurement Line AC Input 100-500 V 50/60 Hz 50 VA
6	USB connector
7	Mini-USB connector
8	Aux 1/2 Connector
9	DC Power Input

Applying the Connector Panel Decal

Self-adhesive decals are supplied with the Logger. The decals correspond to the wiring color codes used in the USA, Europe and UK, UK (old), Canada, and China. Apply the decal appropriate for your local wiring codes around the current and voltage inputs on the connector panel as shown in Figure 7.

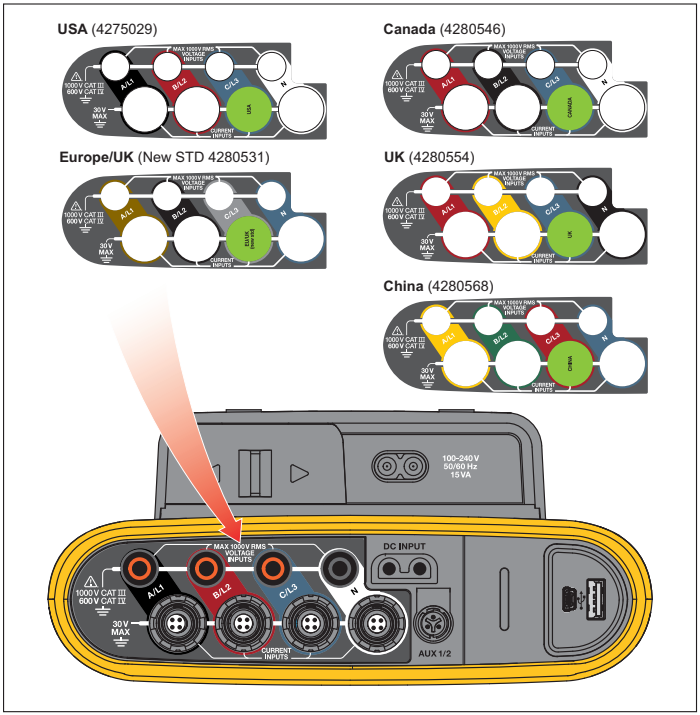

hcf022.eps

Figure 7. Decal for Connector Panel

Power ON/OFF

The Logger has several options for power: mains, measurement line, and battery. The front panel LED shows the status. See Table 5 for more information.

Mains Power Source

1. Attach the power supply to the Logger or use the dc power cord to connect the power supply to the Logger.
2. Move the slide-cover on the power supply to access the mains socket and connect the power cord into the Logger.

   The Logger automatically turns on and is ready to use in <30 seconds.
3. Push ⏻ to turn on and turn off the Logger.

Measurement Line Power Source

1. Attach the Power Supply to the Logger or use the dc power cord to connect the Power Supply with the Logger.
2. Move the slide-cover on the power supply to access the safety sockets and connect these sockets with the voltage input sockets A/L1 and N.

   For 3-phase delta systems connect the safety sockets of the power supply with the input sockets A/L1 and B/L2.

   Use the short test leads for all applications where the measured voltage does not exceed the rated input voltage of the power supply.
3. Connect the voltage inputs to the test points.

   The Logger automatically turns on and is ready to use in <30 seconds.

⚠ Caution

To prevent damage to the product, make sure the measured voltage does not exceed the input rating of the power supply.

⚠⚠ Warning

To prevent injury, do not touch the metal parts of one test lead when the other is still connected to hazardous voltage.

Power from Battery

The Logger can operate on battery power without a connection to the power supply or dc power cord. Push ①. The Logger turns on and is ready to use in <30 seconds.

The battery symbol in the status bar and the power LED indicate the battery status. See Table 5.

Table 5. Power/Battery Status

Logger On		
Power Source	**Battery Symbol**	**Power LED Color**
Mains		green
Battery		yellow
Battery		yellow
Battery		yellow
Battery		yellow
Battery		red
Logger OFF		
Power Source	**Battery Status**	**Power LED Color**
Mains	Charging	Blue
Mains	off	OFF
Logger Status		
not logging		steady
logging		flashing

Touch Screen

The touch screen lets you interact directly with what is on the display. To change parameters, touch a target on the display. Touch targets are easy to recognize, such as large buttons, items in menus, or keys of the virtual keyboard. The Product can be operated with insulating gloves on (resistive touch).

Brightness Button

The touch screen has a backlight for work in dimly-lit spaces. See Table 3 for the location of the Brightness (☼) button. Push ☼ to adjust the brightness in two levels and to turn on and turn off the display.

The brightness is set to 100 % when the Logger is powered from mains. When powered from battery, the default brightness is set to the power-save level of 30 %. Push ☼ to toggle between the two brightness levels.

Push and hold ☼ for 3 seconds to turn off the display. Push ☼ to turn on the display.

Calibration

The touch screen is pre-calibrated in the factory. If you notice that the targets do not align with your touch on the display, you can calibrate the display. Calibration of the touch screen is available in the MEMORY SETTINGS menu. See page 46 for more information about the touch screen calibration.

Basic Navigation

When an option menu shows on the display, use ▲ ▼ to move within the menu.

The SAVE ENTER button has a dual use. In the Configuration and Setup screens, push SAVE ENTER to confirm the selection. On all screens, push SAVE ENTER for 2 seconds to take a screen shot. A beep and the camera symbol on the display confirm the action. See *Screen Capture* for more information about how to review, manage, and copy the screen shots.

Along the bottom of the display, a row of labels shows the available functions. Push F1 F2 F3 or F4 below the display label to start that function. These labels also work as touch targets.

Function Selection Buttons

The Logger has three buttons that toggle between the Meter, Power, and Logger function modes. The current mode shows in the upper left corner of the display:

Meter

METER – The Meter mode shows measurement readings for:

- Voltage (V RMS)
- Current (A RMS)
- Frequency (Hz)
- Wave Shape of Voltage and Current
- THD (%) and Harmonics of Voltage (%, V RMS)
- THD (%) and Harmonics of Current (%, A RMS)
- AUX Input

Push F4 to show the additional values.

Live Trend

You can determine the values or display a trend chart of the last 7 minutes. In the chart:

1. Use F4 or the cursor keys to show the list of available parameters.
2. Push F2 (Reset) to clear the graph and restart.

It is also possible to log the values with the logger function.

Scope

The scope screen shows about 1.5 periods of voltage and current. The exact number of shown periods depends on the input frequency.

The scope screen is helpful to:

- identify the maximum peak value on current channels as a guide for the selection of the current sensor and range
- identify the phase sequence of voltage and current
- visually inspect the phase shift between voltage and current
- understand the consequence of high harmonics on the signal

Use F4 or the cursor keys to show the list of available parameters.

Harmonics

Use F2 (Harmonics) to access the harmonics analysis screens for voltage and current.

Harmonics Spectrum

The harmonics spectrum is a bar chart of the harmonics h02 ... h50. When % of the fundamental is selected, THD is included in the chart. The bar chart in absolute units (V RMS, A RMS) includes the fundamental. Use the trend chart to show the exact value.

Trend Chart

The trend chart is a chart of the fundamental, a selectable harmonic, or THD. A split screen shows the harmonics spectrum in the upper graph and the trend chart in the lower graph. Touch the bar chart or use F2 and F3

to select the parameter of interest. Push F1 (Trend only) to expand the trend chart to full screen.

Harmonics Spectrum Relative to Harmonic Limits

This feature is available on 1738 or 1736 with 1736/Upgrade on installation of the IEEE 519/Report license. The screen shows the harmonics relative to the individual limit defined by a user-selected standard. The standard is selected in the Measurement Configuration. Each bar is green when the measurement is below the individual limit for this harmonic or THD, otherwise, the bar turns red. The number of displayed harmonics varies in accordance with the selected standard.

Note

This screen provides quick feedback about the harmonic levels compared to Power Quality standards. It is no proof of compliance to the standard. The average calculation interval of 1 second is much more frequent compared to the 10 minutes required by applicable standards. A limit violation in this screen does not necessarily result in a standards violation. For example, when the measurement values surpass the maximum allowed tolerance during a short time period. Use the feature to record data in logging sessions and perform standard compliance measurements. For more information about how to start a logging session, see page 32.

The side menu in the harmonics screens has dual use. First, select the parameter to display and confirm with SAVE ENTER. The selector bar jumps to the lower section for the phase selection. The number of available phases and the Neutral current depends on the selected topology. Refer to Measurement Configuration for details. Make your choice and confirm again with SAVE ENTER.

Some screens do not include F4 (Show Menu) to access the side menu. Use the cursor keys instead.

Measurement Configuration

Use the **Change Configuration** touch button to access the measurement configuration screen. The configuration screen allows you to change the parameters for:

- Study type
- Topology
- Nominal voltage
- Current range
- Scale factors for external PTs or CTs
- Auxiliary input configuration
- Review the voltage event limits
- Configure the inrush current limit
- Select the standard for harmonics compliance assessment (available on 1738 or 1736 with 1736/Upgrade or IEEE 519/Report license)

Use F4 to navigate between the sub-screens.

Study Type

Depending on the application, select either Load Study or Energy Study.

- **Energy Study:** Select this study type when voltage measurements for a power quality assessment and power and energy values that include active power (W) and PF are required.
- **Load Study:** For convenience, some applications require you to measure only the current that makes the connection to the point to measure.

  Typical applications are:

  - Verify the circuit capacity before adding additional load.
  - Identify situations where the allowable load can be exceeded.

  Optionally, a nominal voltage can be configured to get pseudo-apparent power readings.

Power Quality

Select the power quality standard (available on 1738 or 1736 with 1736/Upgrade or IEEE 519/Report license) for compliance evaluation.

EN 50160: voltage characteristics of electricity supplied by public distribution networks.

The Logger supports these parameters:

- Frequency
- Voltage Variations
- Voltage Harmonics and Voltage THD
- Unbalance
- Events

IEEE 519: recommended practice and requirements for harmonic control in electric power systems.

The standard defines limits for voltage harmonics, voltage THD, current harmonics and TDD (total demand distortion). The limits for current harmonics and TDD depend on the ratio of maximum demand load current I_L to the short circuit current I_{SC}. Set the values with F2 and F3.

Note

If the values of I_{SC} and I_L are not currently available, you can update these values at a later time with the Energy Analyze Plus software.

Set the Harmonics Standard to off when the harmonics compliance evaluation is not required.

Topology (Distribution System)

Select the appropriate system. A connection diagram for the voltage test leads and current sensors is shown on the Logger.

A diagram is also available with F1 (Connection diagram) from the **Change Configuration** menu. Examples of these diagrams are shown on the following pages.

Single Phase

Example: Branch circuit at an outlet.

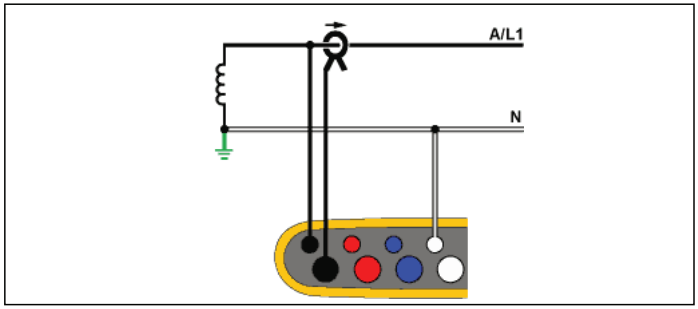

hcf040.eps

Energy Study

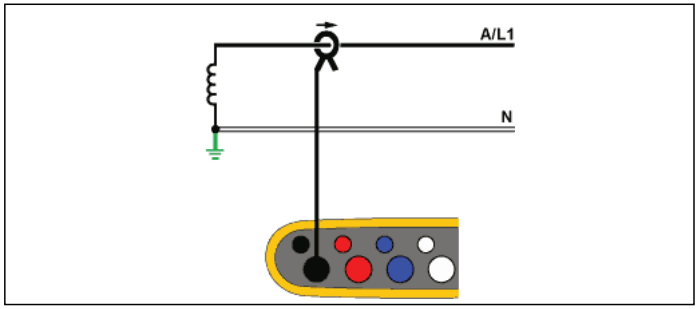

hcf041.eps

Load Study (no voltage measurement)

Single Phase IT

The logger has a galvanic isolation between the voltage inputs and ground based signals like USB and mains input.

Example: Used in Norway and in some hospitals. This would be the connection at a branch circuit.

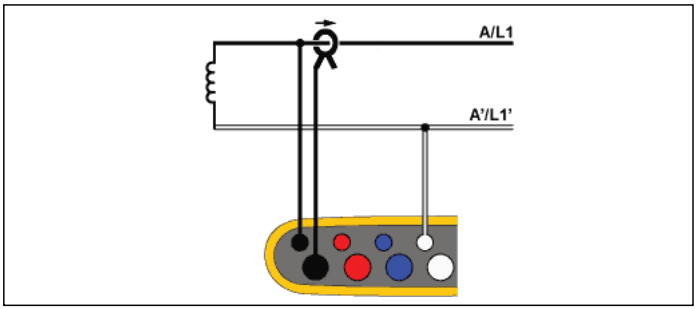

hcf042.eps

Energy Study

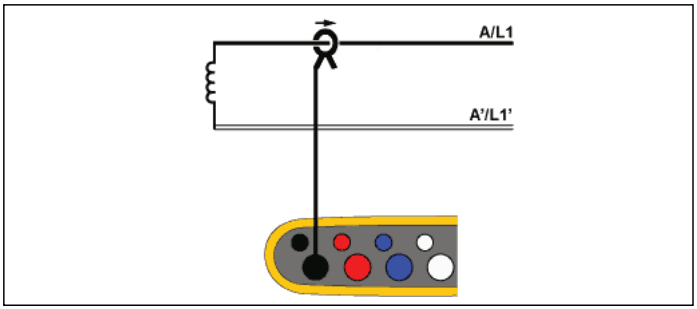

hcf042-2.eps

Load Study (no voltage measurement)

Split Phase

Example: A North American residential installation at the service entrance.

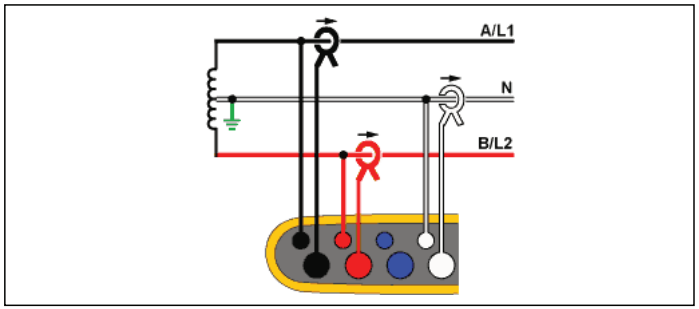

hcf043.eps

Energy Study

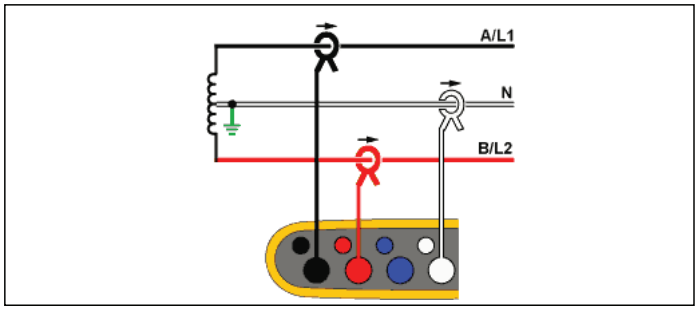

hcf044.eps

Load Study (no voltage measurement)

3-Φ Wye

Example: Also called "Star" or four-wire connection. Typical commercial building power.

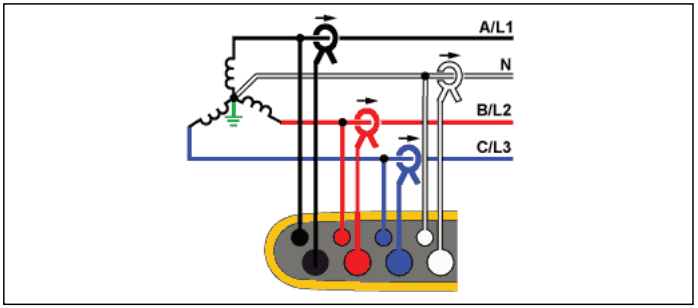

hcf045.eps

Energy Study

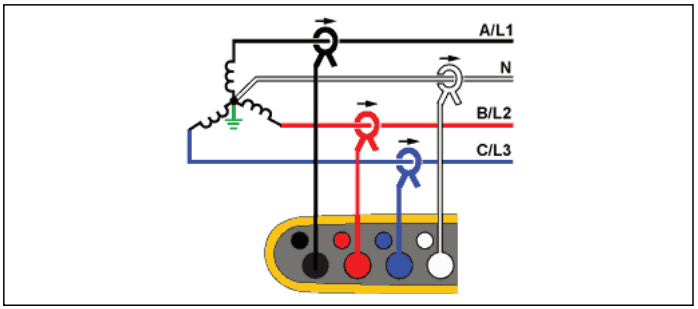

hcf046.eps

Load Study (no voltage measurement)

3-Φ Wye IT

The logger has a galvanic isolation between the voltage inputs and ground based signals like USB and mains input.

Example: Industrial power in countries that use the IT (Isolated Terra) system, such as Norway.

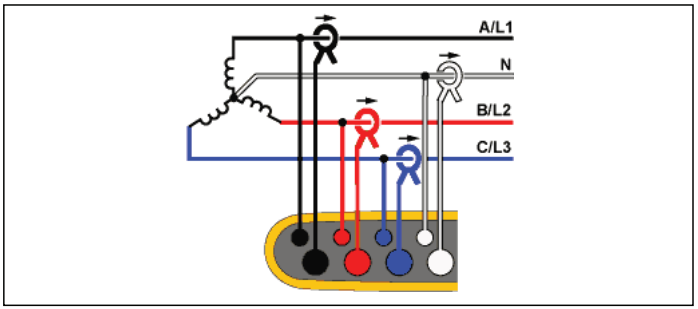

hcf047.eps

Energy Study

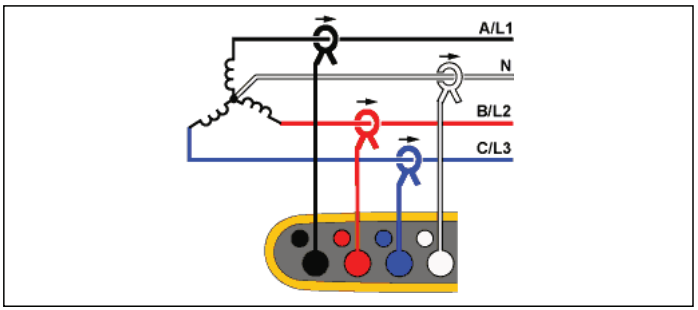

hcf048.eps

Load Study (no voltage measurement)

3-Φ Wye Balanced

Example: For symmetrical loads like motors the connection can be simplified by measuring only one phase and assuming the same voltages/currents on the other phases. As an option, you can measure harmonics with a current probe on the neutral line.

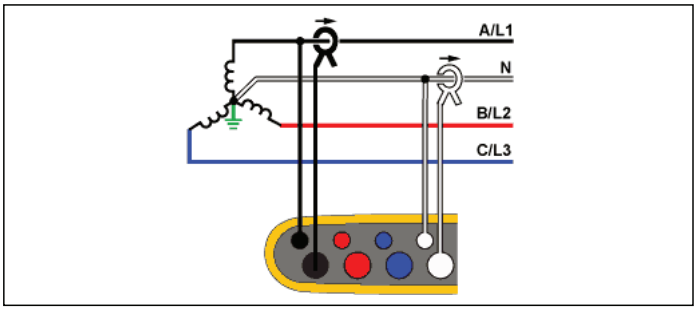

hcf049.eps

Energy Study

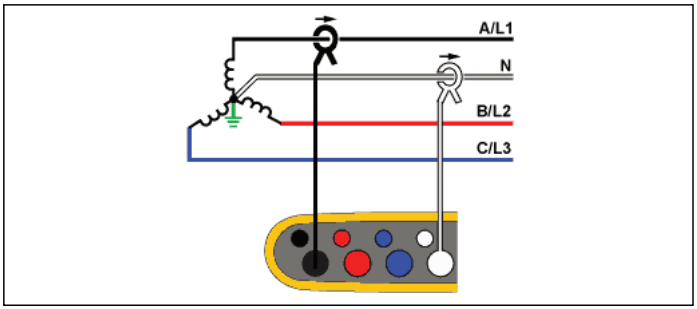

hcf050.eps

Load Study (no voltage measurement)

3-Φ Delta

Example: Often found in industrial settings where electric motors are used.

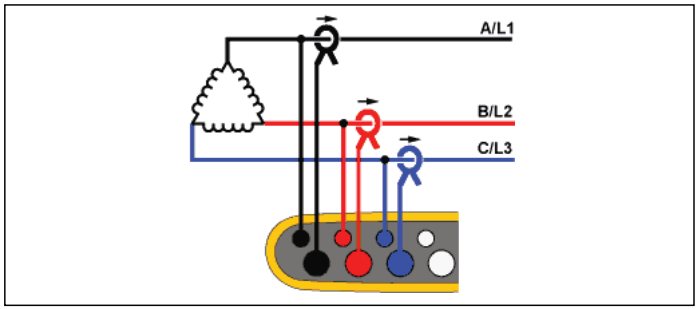

hcf051.eps

Energy Study

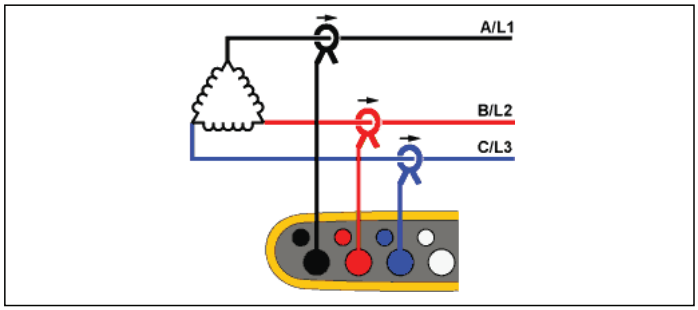

hcf052.eps

Load Study (no voltage measurement)

2 Element Delta (Aron/Blondel)

Example: Blondel or Aron connection, simplifies the connection by the use of only two current sensors.

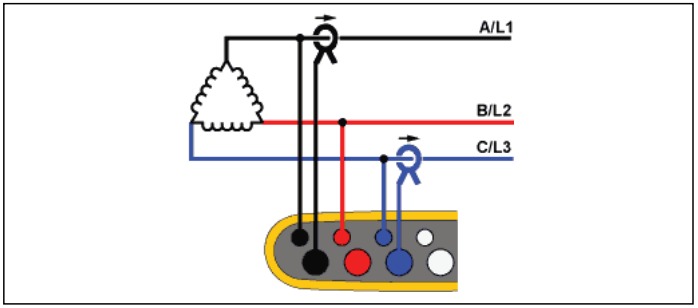

hcf055.eps

Energy Study

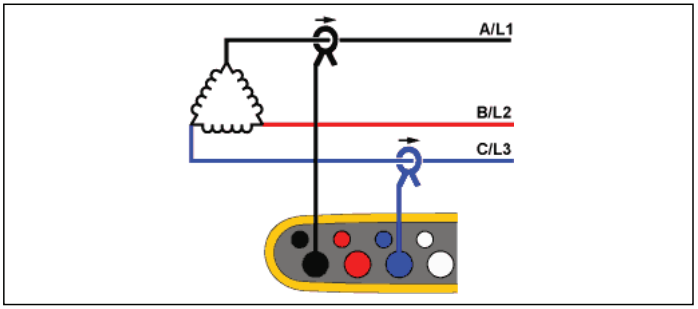

hcf056.eps

Load Study (no voltage measurement)

Note

Make sure that the current arrow on the sensor is directed towards the load to provide positive power values. The current sensor direction can be corrected digitally in the Connection Verification screen.

3-Φ Delta Open Leg

Example: A variant of power transformer winding type.

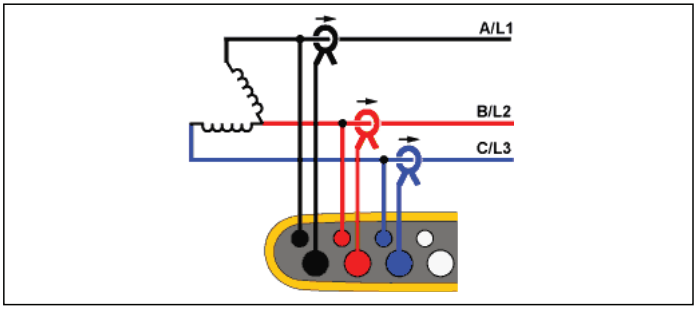

hcf053.eps

Energy Study

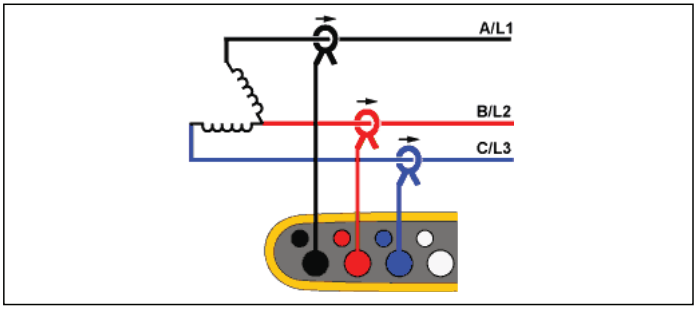

hcf054.eps

Load Study (no voltage measurement)

3-Φ High Leg Delta

Example: This topology is used to provide an additional voltage that is half the phase to phase voltage.

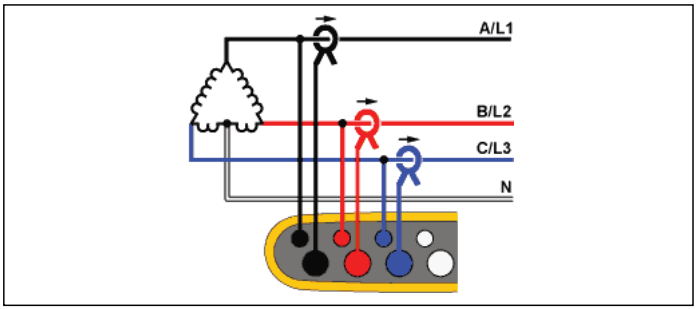

hcf061.eps

Energy Study

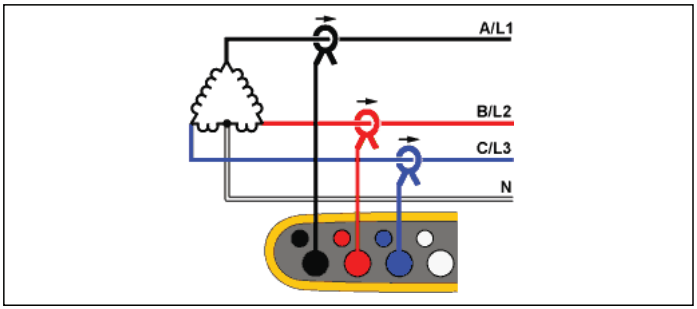

hcf062.eps

Load Study (no voltage measurement)

3-Φ Delta Balanced

Example: For symmetrical loads like motors, the connection is simplified with only one phase measurement and assuming the same voltages/currents on the other phases.

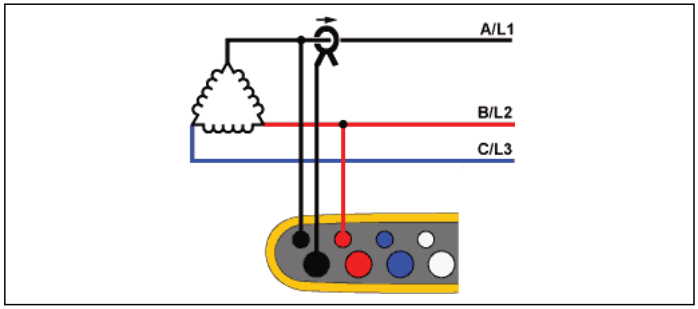

hcf063.eps

Energy Study

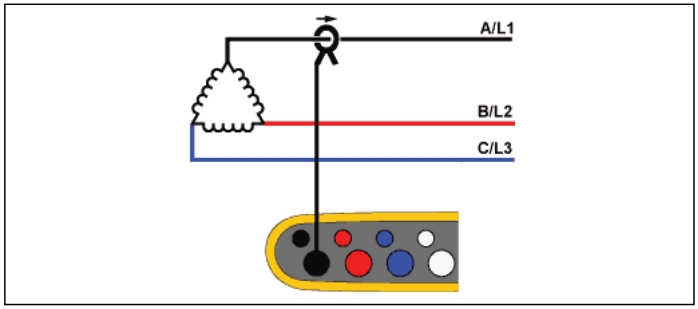

hcf064.eps

Load Study (no voltage measurement)

Nominal Voltage

Select a nominal voltage from the list. If a voltage is not shown in the list, enter a custom voltage. On energy studies, the nominal voltage is required to determine the limits for dips, swells, and interruptions.

The nominal voltage on load studies is used to calculate the pseudo apparent power:

nominal voltage × measured current

Set the nominal voltage to off if the apparent power readings are not required.

Voltage Ratio (only in energy studies)

Configure a ratio factor for the voltage inputs when a potential transformer (PT) is in series with the voltage connections such as when you want to monitor a medium-voltage network. The default value is 1:1.

Nominal Frequency

Set the nominal frequency to be the same as the power line frequency, 50 Hz or 60 Hz.

Use F4 (Show Menu) to navigate between the sub-screens.

Current Range

Configure the current range of the attached sensor. Three ranges are available:

- Auto
- Low Range
- High Range

When set to Auto, the current range is set automatically and depends on the measured current.

Low Range is 1/10 of the nominal range of the attached current sensor. For example, the low range of an iFlex1500-12 is 150 A.

High Range is the nominal range of the attached current sensor. For example, 1500 A is the nominal range on an iFlex1500-12.

Note

Set the current range to Auto when you are not sure about the maximum current during the logging session. A specific application can require you to set the current range to a fixed range rather than Auto. This can occur because the Auto range is not gapless and may lose too much information in the case of a highly fluctuating current.

Current Ratio

Configure a ratio factor for the current sensors when a current transducer (CT) is used to measure the much higher level on the primary side at a substation or step-down transformer that has a built-in metering current transformer.

The current ratio can be used to increase the sensitivity of the iFlex sensor. Wrap the iFlex sensor around the primary conductor, for example 2X, and enter a ratio factor of 1:2 to get correct readings. The default value is 1:1.

Auxiliary Input 1/2

Configure the Auxiliary input to show the readings for the attached sensor. In addition to the default setting of ±10 V, up to five custom sensors can be configured and selected for the Auxiliary input channels.

To configure custom sensors:

1. Select one of the five custom sensors.
2. When the sensor has not been configured, push F4 (Edit) to access the configuration screen.
3. Configure name, sensor type, unit, gain and offset. Confirm the settings with F4 (Back).
4. Select the sensor for the Auxiliary input with SAVE ENTER.

The configuration includes name, sensor type, unit, gain and offset:

- Change the **Name** from Custom1...5 to any clear identification of the sensor with up to 16 characters.
- Select the **Sensor Type** from a list that includes 0-1 V, 0-10 V, 4-20 mA, and other.

  Use the 0-1 V and 0-10 V settings for sensors with a voltage output directly connected to the Aux input. The commonly used sensors that provide an output current of 4-20 mA can be used. In this case, an external resistor parallel to the Aux input (+) and Aux input (-) is required. A resistor value of 50 Ω is recommended. Resistor values >500 Ω are not supported. The resistor value is entered in the sensor configuration dialog and is a convenient method for configuration of the sensor measurement range.
- Use up to 8 characters to configure the measurement **Unit** of the parameter.
- Configure the gain and offset in two ways. For sensor types 0-1 V, 0-10 V, and 4-20 mA, the **Gain and Offset** are automatically calculated with the measurement range of the sensor. In the **Minimum** field, enter the measurement value that the sensor supplies on the output, 0 V for 0-1 V and 0-10 V sensors or 4 mA for 4-20 mA sensors. In the **Maximum** field, enter the measurement value when the sensor supplies 1 V for 1 V sensors, 10 V for 10 V sensors, or 20 mA for 20 mA sensors.

For all other sensors types, use **Other**. For this sensor type use a gain and offset.

Example 1:

Temperature sensor ABC123

Measurement range: -30 °C to 70 °C

Output: 0-10 V

The configuration for this sensor looks like this:

- Name: Change the name from Custom1 to ABC123 (°C)
- Sensor Type: Select 0-10 V
- Unit: Change Unit1 to °C
- Minimum: Enter -30
- Maximum: Enter 70

Example 2:

Fluke 80TK Thermocouple Module

Output: 0.1 V/°C, 0.1 V/°F

Settings in sensor configuration:

- Sensor type: Other
- Unit: °C or °F
- Gain: 1000 °C/V or 1000 °F/V
- Offset: 0 °C or 0 °F

Events

The Events screen shows the settings for:

- Dip
- Swell
- Interruption
- Inrush Current

The Dip, Swell, and Interruption settings on this screen are information only, but you can edit the Inrush Current setting:

1. Highlight **Inrush Current**.
2. Push F3 to open a numeric keypad.
3. Use the cursor keys to input a new limit value.

Connection Verification and Correction

Once the measurement is configured and the voltage and current inputs are connected to the system under test, go back to the Meter mode and use the **Verify Connection** touch button to confirm the connection.

The verification detects:

- Too low signal
- Phase rotation for voltage and current
- Inverted current probes
- Wrong phase map

In the connection verification screen:

1. Push F3 to toggle between generator and motor mode.

   Usually the current flow direction is toward the load. Use Motor Mode for these applications. Use the Generator Mode when the current sensors are connected intentionally to the generator (for example, during the time energy goes into the grid from regenerative braking system of an elevator or on-site wind turbines).

   The current flow arrow indicates the correct flow: a normal condition is shown in Motor Mode with a black arrow pointing upwards, in Generator Mode the black arrow points downwards. If the arrow is shown in red, the current flow direction is inverted.

2. Push F1 (Correct Digitally) to access the connection correction screen. This screen allows you to virtually swap phases and invert the current inputs instead of a manual correction.
3. If the Logger is able to determine a better phase map or polarity, push F2 (Auto Correct) to apply the new settings.

   Auto Correct is not available if the algorithm is not able to detect a better phase map or when no errors are detected.

   Note

   It is impossible to detect all incorrect hook-ups automatically. You must verify the suggested modifications carefully before you apply the digital correction. Applications with single-phase energy generation can deliver the wrong results when you apply the Auto Correct feature.

The algorithm works in a way that creates in three phase systems a sequence with a clockwise phase rotation.

Power

POWER – In the Power mode you can get the values and a live trend chart for each phase (A, B, C or L1, L2, L3) and total as:

- Active Power (P) in W
- Apparent Power (S) in VA
- Non-active Power (D) in var
- Power Factor (PF)

Use F2 (Fundamental/RMS) to toggle between full bandwidth power values and power of the fundamental.

In the fundamental power screen you see these values:

- Fundamental Active Power (P_{fund}+) in W
- Fundamental Apparent Power (S_{fund}) in VA
- Fundamental Reactive Power (Q_{fund}) in var
- Displacement Power Factor (DPF) / cosφ

Push F4 (Show Menu) to open a list of simplified Power screens that show all phases and total of one parameter, all parameters of one phase, or total.

The menu also provides the access to live values of Energy as:

- Active Energy (E_p) Wh
- Reactive Energy (E_Qr) in varh
- Apparent Energy (E_s) in VAh

To display a trend chart of the last 7 minutes of Power values:

1. Push F1 (Live-Trend).
2. Use F4 or the cursor keys to show the list of available parameters.
3. Push F2 (Reset) to clear the graph and restart.

Note

In the user interface, the term Fundamental is sometimes shortened to "Fund." or "h01."

Logger

LOGGER – In Logger mode, you can:

- Configure a new logging session
- Review the data of an ongoing logging session in memory
- Review the data of a completed logging session (as long as no new session has been started)

Push MEMORY SETTINGS and then F1 (Logging Sessions) to review a logging session.

Logging Session Setup

When no logging session is active, push LOGGER to display the Setup Summary screen for logging. This screen lists all logging parameters such as:

- Session name
- Duration and optional recording date and time for start/stop
- Interval of the average calculation
- Demand interval (not available for load studies)
- Energy costs (not available for load studies)
- Description

To select between Load Study and Energy Study:

1. Go to **Meter > Change Configuration**. This Configuration screen contains the measurement configuration parameters such as Topology, current range, voltage, and current ratios.
2. See page 20 for more information about measurement configuration.
3. After you review these parameters, push the **Start Logging** touch target to start recording.
4. If you want to modify the parameters, push the **Edit Setup** touch target. The settings are kept during a power cycle. This allows you to configure the logging session in the office when more convenient and avoid this time-consuming task in the field.

Name

The Logger auto-generates a file name with the format ES.xxx or LS.xxx.

ES ... Energy Study

LS ... Load Study

xxx ... incremental file number

The counter resets when the Logger is set to factory defaults. See page 47 for details. You can also choose a custom file name with up to 31 characters.

Duration and Recording Start/Stop Date and Time

You can set the duration of the measurement from a list. **No end** configures the maximum possible duration based on the available memory.

For a duration not shown in the list, select **Custom** to enter the duration in number of hours or days.

The logging session stops automatically when the time duration has elapsed. Also, you can manually stop the logging session at any time.

A logging session starts to record immediately when you push the **Start Logging** touch target. You can configure a scheduled recording. It is either configured by the duration and the start date and time or by the start date and time and stop date and time.

This is a convenient method for how to set up the Logger to measure a full week profile starting on Monday 0:00 and ending on Sunday 24:00.

Note

*Even when a start date and time has been configured, you must push the **Start Logging** button.*

Options to configure the logging session:

- Duration and manual start
- Duration and set start date/time
- Set start date/time and set end date/time

A memory gauge shows the memory used by recorded sessions and stored screenshots in black. The memory required for the new session is shown in green. When the new logging session will not fit in the available memory, the gauge turns from green to red. If you confirm the selection, the Logger will adjust the averaging interval accordingly.

Interval of the average calculation

Select the time interval when a new average value is added to the logging session. The available intervals are: 1 s, 5 s, 10 s, 30 s, 1 min, 5 min, 10 min, 15 min, 30 min.

A shorter interval provides more details at the cost of higher memory consumption.

Examples of when a short interval is useful:

- Identify duty cycle of frequently switching loads
- Energy cost calculation of production steps

The Logger recommends an interval based on the duration to get the best balance between resolution and data size.

A memory gauge shows the memory used by recorded sessions and stored screenshots in black. The memory required for the new session is shown in green. In the case where the new logging session will not fit in the available memory, the gauge turns from green to red. It is still possible to confirm the selection but the Logger will adjust the duration accordingly.

Demand Interval

Electrical suppliers use this interval to measure the customer demand. Select an interval to get energy costs and the maximum demand value (average power measured over a demand interval).

A value of 15 minutes is normal. If you don't know the average interval, select 5 minutes. You can recalculate other interval lengths offline using the Energy Analyze Plus software.

Note

This value is not available for load studies.

Energy costs

Enter the costs/kWh for demand energy. The energy costs are applied to forward energy (positive energy) using the demand interval and can be reviewed in the Logger detail screen Energy - Demand.

Energy costs can be entered using a resolution of 0.001. The currency unit is changed in Instrument Settings. See page 45 for more information.

Note

This value is not available for load studies.

Description

Enter more details about the measurement, such as customer, location, and load-rating plate data with the virtual keyboard. This description field is limited to 127 characters.

After you download a logging session with Energy Analyze software, use more advanced inputs to support line breaks and an unlimited number of characters.

Logging Session Review

When a logging session is started, or when you review a completed session, the Logging home screen is shown. During active recording, this screen can be accessed when you push LOGGER.

The Logger home screen shows the progress of an active recording. Use F4 (Show Menu) to review the logging setup. On energy studies, you can select one of the available overview screens:

- Power

  Screen provides access to V, A, Hz, + (A, Hz, + for load studies), power, and energy
- PQ Health (available on 1738 or 1736 with 1736/Upgrade or IEEE 519/Report license)

  Screen provides access to Power Quality graphs, harmonics, and events
- Quality

  Screen provides access to Power Quality graphs, harmonics, and events

Power/Load Study Overview

The screen shows the overview chart with active power and PF for energy studies and currents for load studies. Total energy is available also in energy studies.

The screen updates with each new average calculation interval at a maximum of every 5 seconds.

From the Logger home screen you have access to:

- V, A, Hz, + (A, Hz, + for load studies)
- Power
- Energy
- Details

In the "V, A, Hz, +", "Power" and "Energy" screens, use F4 (Show Menu) or the cursor keys to see a list of available parameters. Use ▲▼ to select a parameter and confirm the selection with SAVE ENTER.

Tables update with each new average calculation interval at a maximum of every 5 seconds. Push F2 (Refresh) to update charts on request.

V, A, Hz, + (Load studies: A, Hz, +)

You can determine the average value measured over the logging duration as well as minimum/maximum values with high resolution.

Parameter	Min	Max	Resolution
V	+	+	Full cycle (typ. 20 ms @ 50 Hz, 16.7 ms @ 60 Hz)
A	0	+	Half cycle (typ. 10 ms @ 50 Hz, 8.3 ms @ 60 Hz)
Hz	+	+	200 ms
AUX	+	+	200 ms
THD-V/THD-A	0	+	200 ms

Note

+ available with the Logger and the PC software
0 available with the PC software

The algorithm to calculate Voltage min/max values is in accordance to established power quality standards to detect dips, swells, and interruptions.

Watch for values exceeding ±15 % of the nominal voltage. This is an indicator of power quality problems.

High maximum values on Currents can be an indicator for tripping circuit breakers.

Push F1 (Graph) to display the measured values in a chart. The table on the right side of the screen shows the highest and lowest value of the graph measured with the average calculation interval. Triangular indicators point to the measurement value.

Power

Note

Not available on load studies without a nominal voltage.

Review the power values in tabular format and as a time chart. Depending on the power parameter or the average value measured over the logging duration, additional values are available:

Parameter	Min/ Max	Top 3	Top 3 Forward/ Reverse
Active Power (W)	-	-	+/+
Apparent Power (VA)	-	+	-
Non-active Power (var)	-	+	-
Power Factor	+	-	-
Active Power fund. (W)	-	-	+/+
Apparent Power fund. (VA)	-	+	-
Reactive Power (var)	-	-	+/+
Displacement Power Factor/cosφ	+	-	-

For all power values, except PF and DPF, the three highest values during the logging session are available. Use F2 (Reverse Power/Forward Power) to toggle between Top-3 forward and Top-3 reverse values.

Push F1 (Graph) to display the measured values in a chart. The table on the right side of the screen shows the highest and lowest value of the graph measured with the average calculation interval. Triangular indicators point to the measurement value.

Energy

Note

Not available on load studies without a nominal voltage.

Determine the energy consumed/delivered since the logging session has been started.

Parameter	Forward/Reverse Energy	Total Energy
Active Energy (Wh)	+/+	+
Apparent Energy (VAh)	-/-	+
Reactive Energy (varh)	-/-	+

The Demand screen shows the values for:

- Consumed energy (= forward energy) in Wh
- Maximum Demand in W. Maximum demand is the highest active power measured over the demand interval and is often part of the contract with the electricity supplier.
- Energy cost. The currency can be configured in instrument settings. See page 45 for more information.

PQ Health Overview

The PQ Health Overview is available on 1738 or 1736 with 1736/Upgrade or IEEE 519/Report license. This screen shows a pass/fail analysis based on limits defined by the power quality standard EN 50160.

The screen includes the parameters for:

- Frequency
- Voltage Variations
- Voltage Harmonics
- Unbalance
- Events

The frequency, unbalance, and events have a single bar, voltage variations, and voltage harmonics shown in three bars that depend on the configured topology.

The length of a bar increases if the related parameter is further away from its nominal value. The bar turns from green to red if a maximum allowed tolerance requirement is surpassed. When the standard defines two limits for a parameter (for example, voltage variations have a limit for 95 % of the time and limit for 100 % of the time) the bar changes from green to orange when the parameter surpasses the 95 % limit but does not exceed the 100 % limit. For more information go to www.fluke.com and search for the white paper, *Measurement Methods*.

The screen updates with each new average calculation interval of 10 minutes. From the PQ Health Home screen you have access to:

- PQ Graphs
- Harmonics
- Events

Quality Overview

The Quality Overview screen shows an average of voltage THD and the first 25 voltage harmonics of up to three phases and the number of voltage events. The screen updates with each new average calculation interval of 10 minutes.

From the PQ Health home screen you have access to:

- PQ Graphs
- Harmonics
- Events

PQ Graphs

Use F1 (PQ Graphs) to review the graphs of the power quality parameters: Voltage, Frequency, and Supply Voltage Unbalance. The Voltage and Unbalance values are averaged every 10 minutes and the interval begins with the 10-minute clock tick. The time stamp of the interval represents the end of the interval. The Frequency is averaged over an interval of 10 seconds. New values are available every 10 minutes.

The Unbalance value u2 (negative sequence ratio) is the ratio of negative sequence divided by positive sequence and is shown as a percentage.

In the case of a counter-clockwise rotating system, the unbalance would show values exceeding 100 %. In this case the ratio positive sequence divided by negative system is calculated which results in values lower or equal to 100 %.

Note

The unbalance is only available in three phase delta and wye systems, excluding the balanced systems.

Harmonics

Use F2 (Harmonics) to access the harmonics analysis screens for voltage and current.

Harmonics Spectrum

The harmonics spectrum is a bar chart of the harmonics h02 ... h50. When % of the fundamental is selected, THD is included in the chart. The bar chart in absolute units (V RMS, A RMS) includes the fundamental. Use the trend chart to show the exact value.

Trend Chart

The trend chart is a chart of the fundamental, a selectable harmonic, or THD. A split screen shows the harmonics spectrum in the upper graph and the trend chart in the lower graph. Touch the bar chart or use F2 and F3 to select the parameter of interest. Press F1 (Trend only) to expand the trend chart to full screen.

Harmonics Spectrum Relative to Harmonic Limits

This screen is available on 1738 or 1736 with 1736/Upgrade or IEEE 519/Report license) and shows the

harmonics relative to the individual limit defined by the standard defined in the measurement configuration. Each bar is green when the measurement is below the individual limit for this harmonic or THD. When the standard defines two limits, for example, a limit for 95 % of all values and a limit for 99 % of all limits, the bar turns orange when the measurement values comply with the 99 % limit but violate the 95 % limit. When both limits are violated the bar turns red. When the standard defines only one limit for each harmonic or THD, the bar turns from green to red when this limit is violated. The number of displayed harmonics varies in accordance with the selected standard.

The side menu in the harmonics screens has dual use. First, select the parameter to display and confirm with SAVE ENTER. The selector bar jumps to the lower section for the phase selection. The number of available phases and the Neutral current depends on the selected topology. Refer to *Measurement Configuration* for details. Make your choice and confirm again with SAVE ENTER.

Some screens do not include F4 (Show Menu) to access the side menu. Use the cursor keys instead.

Events

The Logger captures events on voltage and current. The events are shown in a table with the columns ID, Start Time, End Time, Duration, Event Type, Extreme Value, Severity, and Phase. Touch the arrows left and right of the table to view all available columns. Use ▲▼ to highlight an event of interest. On the 1738 or the 1736 with 1736/Upgrade license, use F2 (Waveshape) and F3 (RMS Profile) to review the recordings triggered with the start of the event.

The voltage events are classified in dips, swells, and interruptions and are measured according to the standard IEC 61000–4–30 "Electromagnetic compatibility (EMC) - Part 4-30: Testing and measurement techniques - Power quality measurement methods". According to this standard the Logger applies the polyphase event detection on split phase and three phase systems with the exception of the topologies 3-phase Delta balanced and the 3-phase Wye balanced. The events are captured and reported for phase A/L1 only.

Note

The polyphase event detection simplifies the event table because events on multiple phases are combined when they occur at the same time or overlap. In the Energy Analyze Plus software you can select to get either a table with combined events using the polyphase event detection or a table with events for each individual phase in order to review details, like start time, end time, or the extreme value on an individual phase of interest.

Supply Voltage Swells

On single-phase systems, a swell begins when the voltage rises above the swell threshold, and ends when the voltage is equal to or below the swell threshold minus the hysteresis voltage. See Figure 8.

On polyphase systems, a swell begins when the voltage of one or more channels is above the swell threshold and ends when the voltage on all measured channels is equal to or below the swell threshold minus the hysteresis voltage.

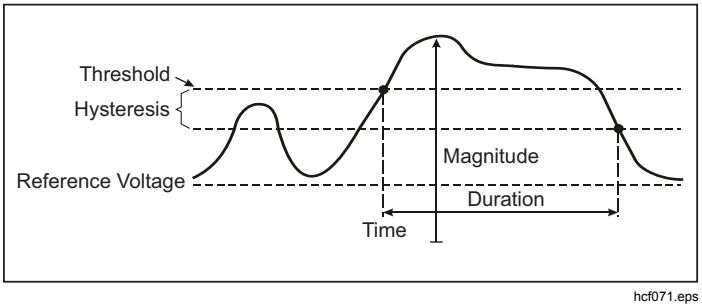

Figure 8. Characteristics of a Voltage Swell

On single-phase systems, a voltage dip begins when the voltage falls below the dip threshold, and ends when the voltage is equal to or above the dip threshold plus the hysteresis voltage. See Figure 9.

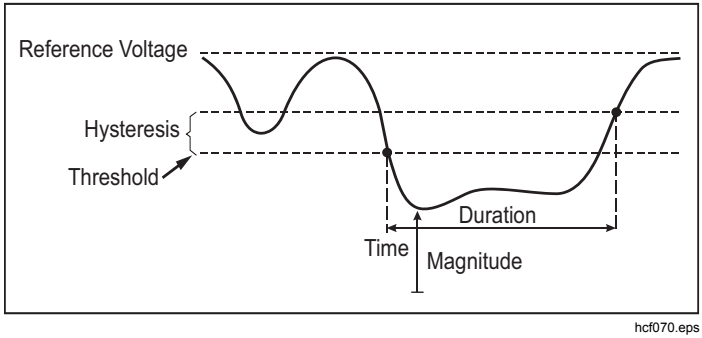

Figure 9. Characteristics of a Voltage Dip

On polyphase systems, a dip begins when the voltage of one or more channels is below the dip threshold and ends when the voltage on all measured channels is equal to or above the dip threshold plus the hysteresis voltage.

Supply Voltage Interruptions

On single-phase systems, a voltage interruption begins when the voltage falls below the voltage interruption threshold and ends when the value is equal to or greater than the voltage interruption threshold plus the hysteresis. See Figure 10.

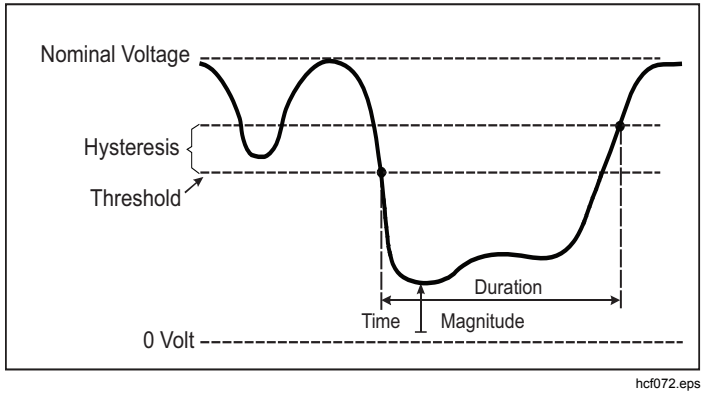

Figure 10. Characteristics of a Voltage Interruption

On polyphase systems, a voltage interruption begins when the voltages of all channels fall below the voltage interruption threshold and ends when the voltage on any one channel is equal to, or greater than, the voltage interruption threshold plus the hysteresis.

Note

On polyphase systems, the event is still classified as a dip when the voltage of only one or two phases falls below the interruption limit.

Inrush Current

Inrush currents are surge currents that occur when a large, or low-impedance load comes on line. Normally the current will stabilize after some time when the load has reached normal working condition. For example the start-up current in induction motors can be 10x the normal working current. See Figure 11.

The inrush current begins when the 1/2cycle RMS current rises above the inrush threshold, and ends when the 1/2cycle RMS current is equal to or below the inrush threshold minus the hysteresis value. In the event table the extreme value is the highest 1/2cycle RMS value of the event.

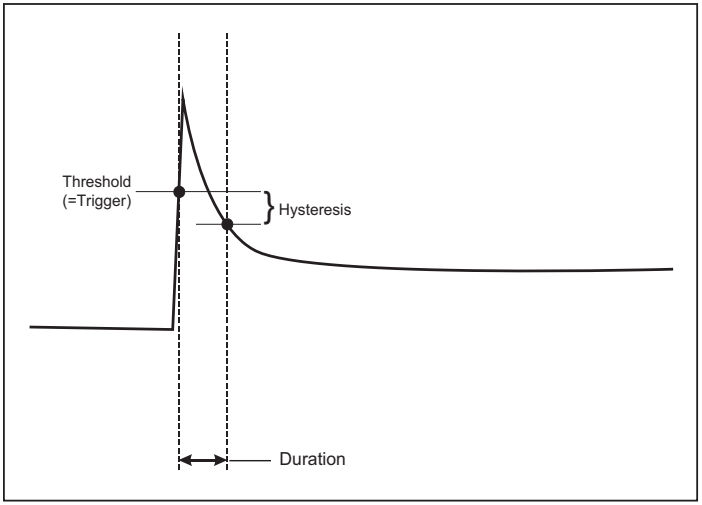

hcf073a.eps

Figure 11. Inrush Characteristics and Relation with Start Menu

Details

The details screen provides an overview of the logging setup. During an active session or when reviewing an already completed session, you can modify the description and the cost/kWh with the **Edit Setup** touch target.

Push **View Configuration** to review the measurement configuration for the logging session.

Memory/Settings Button

In this menu you can:

- Review and erase the data from completed logging sessions
- Review and erase screen captures
- Copy measurement data and screen captures to the USB flash drive
- Make adjustments to the instrument settings

Logging Sessions

The list of stored logging sessions is available with F1 (Logging Sessions). Push ▲▼ to move the screen highlight to the logging session of interest. Additional information such as start and end time, duration, logging description, and file size are shown.

1. Push SAVE ENTER to review the logging session. See *View Logging Sessions* for more details.

   Note

   It is not possible to review a completed logging session when another session is active.

2. Push F1 (Delete) to remove the selected logging session. Push F2 to remove all logging sessions.

   Note

   An active logging session cannot be deleted. Stop the logging session before you delete.

3. Push F3 (Save to USB) to copy the selected logging session to an attached USB flash drive. The session is stored on the USB flash drive in the folder: \Fluke173x\<serial number>\sessions

Screen Capture

In this screen you can review, erase, and copy saved screens to a USB flash drive.

1. Push MEMORY SETTINGS.
2. Push F2 (Screen Capture) to show the list of all screens. See *Basic Navigation* for information about how to capture screens.
3. Push ▲▼ to move the screen highlight to a screen of interest. A thumbnail image of the screen is shown for easy identification.
4. Use F1 (Delete) to delete the selected screen. Push F2 to delete all screens.
5. Push F3 or (Save All to USB) to copy all screens to an attached USB flash drive.

Instrument Settings

The Logger has settings for language, date and time, phase information, currency, firmware version and update, WiFi configuration, and touch screen calibration.

To change the settings:

1. Push MEMORY SETTINGS.
2. Push F4 (Instrument Settings).

Language

The user interface of the Logger is available in Czech, Chinese, English, French, German, Italian, Japanese, Korean, Polish, Portuguese, Russian, Spanish, and Turkish.

To change the display language:

1. Push MEMORY SETTINGS.
2. Push F4 (Instrument Settings).
3. Push ▲▼ to move the screen highlight to language field and push SAVE ENTER or touch the **Language** target.
4. Push ▲▼ to move through the language list.
5. Push SAVE ENTER to activate the new language.

The language immediately updates on the screen.

Phase Color/Phase Labels

The phase colors are configurable to match with the connector panel decal. Five schemes are available:

	A/L1	B/L2	C/L3	N
US	black	red	blue	white
Canada	red	black	blue	white
EU	brown	black	grey	blue
UK (old)	red	yellow	blue	black
China	yellow	green	red	blue

To change the phase color/phase labels:

1. Push MEMORY SETTINGS.
2. Push F4 (Instrument Settings).
3. Push ▲▼ to highlight **Phases** and push SAVE ENTER or touch **Phases** target.
4. Select one of the available schemes.
5. Push F2 to toggle the phase label between **A-B-C** and **L1-L2-L3**.
6. Push SAVE ENTER to confirm the selection.

Date/Time Zone

The logger stores the measurement data in universal time coordinate (UTC) to ensure continuity in time and accounts for time changes due to daylight saving time (DST).

To display the time stamps of the measurement data correctly, it is required to set the time zone. The Logger adjusts automatically to DST. For example, a 1-week measurement started on 2-Nov-2013 8:00 am ends on 9-Nov-2013 08:00 am even though the clock was set back on 3-Nov-2013 from 02:00 to 01:00.

To set the time zone:

1. Push MEMORY SETTINGS.
2. Push F4 (Instrument Settings).
3. Push ▲▼ to highlight **Time Zone** and push SAVE ENTER or touch **Time Zone** target.
4. Select the regions/continents.
5. Push SAVE ENTER.
6. Continue to select the country/city/time zone until the time zone configuration is done and the Instrument Settings menu shows.

To set the date format:

1. Push MEMORY SETTINGS.
2. Push F4 (Instrument Settings).
3. Push ▲▼ to highlight the **Date Format** target and push SAVE ENTER or touch the **Date Format** target.
4. Select one of the available date formats.
5. Push F2 to toggle between a 12 hour or 24 hour format. A preview of the configured date format shows on the display.
6. Push SAVE ENTER to confirm the selection.

To change the time:

1. Push MEMORY SETTINGS.
2. Push F4 (Instrument Settings).
3. Push ▲▼ to highlight the **Time** target and push SAVE ENTER or touch the **Time** target.
4. Touch the **+** and **–** targets for each field.
5. Push SAVE ENTER to confirm the change and exit the screen.

Currency

The currency symbol used for energy cost values is configurable.

To set the currency:

1. Push MEMORY SETTINGS.
2. Push F4 (Instrument Settings).
3. Push ▲▼ to highlight the **Currency** target and push SAVE ENTER or touch the **Currency** target.
4. Select one of the currency symbols and push SAVE ENTER.
5. If a currency is not in the list, select **Custom** and push F4 or touch **Edit Custom** target.
6. Enter a three-letter currency code with the keyboard and accept with F4.
7. Push SAVE ENTER to confirm the selection.

Status Information

The screen provides information and status about the Logger, such as the serial number, attached current probes, battery status, and installed licenses.

To go to the status information:

1. Push MEMORY SETTINGS.
2. Push F4 (Instrument Settings).
3. Push F2 (Info).
4. Push F4 to exit the screen.

Firmware Version

To find the firmware version installed on your Logger:

1. Push MEMORY SETTINGS.
2. Push F4 (Instrument Settings).
3. Push F1 (Tools).
4. Push ▲▼ to select **Firmware version** and push SAVE ENTER or touch the **Firmware version** target.
5. Push F4 to exit the screen.

Touch Screen Calibration

The touch screen has been calibrated at the factory before shipment. In case you do experience misalignment with the touch targets, use the touch screen calibration feature.

To calibrate:

1. Push MEMORY SETTINGS.
2. Push F4 (Instrument Settings).
3. Push F1 (Tools).
4. Push ▲▼ to highlight **Touch Screen Calibration** and push SAVE ENTER or touch the **Touch Screen Calibration** target.
5. Touch the five cross hair targets as exactly as possible.

WiFi Configuration

To configure the first-time WiFi connection of a PC/smartphone/tablet to the Logger, setup the WiFi details in the Tools screen.

To view the WiFi setup parameters:

1. Push MEMORY SETTINGS.
2. Push F4 (Instrument Settings).
3. Push F1 (Tools).

4. Push ▲▼ to highlight the **WiFi configuration** target and push SAVE ENTER or touch the **WiFi configuration** target to view the WiFi connection details.

   Note

   This feature is only available when a supported USB WiFi dongle is attached to the Logger.

Copy Service Data to USB

If requested for customer support, use this function to copy all measurement files in raw format and system information to a USB flash drive.

To copy the service data:

1. Attach a USB flash drive with sufficient available memory (depending on the file size of stored logging sessions max. 180 MByte).
2. Push MEMORY SETTINGS.
3. Push F4 (Instrument Settings).
4. Push F1 (Tools).
5. Push ▲▼ to highlight the **Copy service data to USB** target and push SAVE ENTER or touch **Copy service data to USB target** to start the copy process.

Reset to Factory Defaults

The reset function deletes all user data, such as logging sessions and screen captures, and sets the instrument settings to default values. It also enables the first-time use wizard the next time the instrument boots.

To reset:

1. Push MEMORY SETTINGS.
2. Push F4 (Instrument Settings).
3. Push F1 (Tools).
4. Push ▲▼ to highlight **Reset to Factory Defaults** and push SAVE ENTER or touch **Reset to Factory Defaults** target.

A display message prompts you to continue or cancel the reset.

The Logger is reset to factory defaults also when you simultaneously push and hold the buttons METER, LOGGER, and MEMORY SETTINGS while the Logger starts.

Firmware Update

To update:

1. Take a USB flash drive with at least 80 MB of free space available and create a folder called "Fluke1736" (no spaces in file name).

   Note

   Make sure the USB is formatted with FAT or FAT32 file system.

   In Windows USB flash drives ≥32GB can be formatted with FAT/FAT32 only by using 3rd party tools.

2. Copy the firmware file (*.bin) into this folder.
3. Make sure the Logger is powered from mains and operating.
4. Plug the flash drive into the Logger. The USB Transfer screen pops up and offers the firmware update.
5. Push ▲▼ to select the firmware update and push SAVE ENTER.
6. Follow the instructions. When the firmware update is complete the Logger reboots automatically.

Note

A firmware update deletes all user data such as measurement data and screen captures.

This firmware update works only when the firmware version on the USB flash drive is newer than the installed version.

To install the same version or an older version:

1. Push MEMORY SETTINGS.
2. Push F4 (Instrument Settings).
3. Push F1 (Tools).
4. Push ▲▼ to select **Firmware Update** and push SAVE ENTER or touch the **Firmware Update** target.

Note

If more than one firmware file (.bin) is located in the \Fluke173x folder, the newest version is used for the update.*

First-time Use/Setup Wizard

To start the Logger:

1. Install WiFi/BLE or WiFi only adapter (see page 6).
2. Attach the power supply to the Logger or use the dc power cable to connect the Power Supply with the Logger.
3. Connect the power cord into the power supply.

   The Logger starts up in <30 seconds and the Setup Wizard starts.
4. Pick the language (see page 43).
5. Push F4 (Next) or SAVE ENTER to navigate to the next page.
6. Push F2 (Cancel) to close the setup wizard. If you cancel, the setup wizard starts again on next startup of the logger.
7. Pick the work standards for your region. This action selects the color codes and the phase descriptor (A, B, C, N or L1, L2, L3, N).

   This is the best time to apply the correlating decal on the connector panel. The decal helps you to quickly identify the appropriate voltage test lead and current probe for the different phases and neutral.
8. Attach the color clips to the current probe cables.
9. Pick your time zone and date format. Confirm that the correct date and time are shown on-screen.
10. Pick the currency sign or currency code.

The Logger is now ready for the first measurements or energy study.

Note

Be aware that for power measurements in 3-phase systems:

- *Total Active Power (W) is the sum of the individual phases*
- *Total Apparent Power (VA) also includes the neutral current that can result in a very different result than the sum of the three phases. This is especially noticeable when a signal is connected to all three phases (for example, a calibrator) the total value is approximately 41% higher than the sum of each phase.*
- *Total Fundamental Power (W and var) only delivers the sum of each phase when the phase rotation is clockwise. It is zero when the phase rotation is counter-clockwise.*

For more information, see the white paper, Measurement Theory Formulas, at www.fluke.com for a list of formulas.

First Measurements

At the energy study site, look at the information in the panel and the rating plates on the machines. Based on knowledge of the electrical supply in the facility, determine the configuration.

To start measurements:

1. Connect the Logger to mains power.

   Note

   See page 16 if you want to power the Logger from the measurement line.

   The Logger starts and shows the Meter screen with Volts, Amps, and Hz readings.

2. Push **Change Configuration.** Confirm the study type and the wiring configuration is correct. For most applications the current range is set to Auto and the voltage and current ranges are 1:1. Configure the gain, offset, and engineering unit of measurement for the sensors attached to the Auxiliary inputs.

3. Push **Configuration Diagram** for guidance on the voltage test lead and current probe connections.

4. Plug the voltage test leads into the Logger.

5. Use the Thin-Flexi current probes and plug the phase A current probe into the phase A/L1 input jack on the logger, the phase B/L2 current probe into the phase B/L2 input jack on the logger, and the phase C/L3 current probe into the phase C/L3 input jack on the logger.
6. Apply the iFlex Probes to the wires in the electrical panel. Make sure the arrow on the probe points to the load.
7. Connect the voltage test leads to neutral, phase A/L1, phase B/L2, and phase C/L3.
8. With all of the connections done, check that the voltages for phases A/L1, B/L2, and C/L3 are as expected.
9. Read the current measurements for phases A/L1, B/L2, C/L3, and N.
10. Push **Verify Connection** to check and correct the phase rotation, phase mapping, and polarity of current probes.

    Most installations use a clockwise rotation.
11. Push **Live-Trend** to display a chart of the last 7 minutes.
12. Push POWER to determine the power values, especially active power and power factor.
13. Push **Live-Trend** to display a chart of the last 7 minutes.
14. Push SAVE ENTER for 3 seconds to take a snapshot of the measurements.
15. Push LOGGER and change the default configuration with **Edit Setup**.

    Typical setup:
    - 1 week duration
    - 1 minute for average calculation interval
    - 15 minutes for demand interval
16. Push **Start Logging**.

    You can review the live data with METER or POWER. Return to the active logging session with LOGGER. Once the logging session is completed it is accessible in Memory/Settings - Logging Sessions.
17. Review the logged data using the softkeys **V, A, Hz, +**, **Power**, and **Energy**. See page 36 for more information.
18. To transfer and analyze the data using the PC software, attach the USB flash drive to the Logger and copy the logging session and screenshot.

    Note

    You can also use the USB cable or the USB WiFi dongle to transfer the measurement data.

To analyze the data using the PC software:

1. Attach the USB flash drive to a PC with Energy Analyze installed.
2. In the software, click **Download** and copy the logging session and screenshot from the USB flash drive.
3. Open the downloaded session and view the measured data.
4. Go to the Project Manager tab and click **Add Image** to add the screenshot.

For more information about how to use the Energy Analyze, see the online help for the software.

Licensed Features

License keys are available as optional accessories to extend the functionality of the Logger with licensed features.

Table 6 shows the available licensed features:

Table 6. Optional License Features

Feature	1736	1738
WiFi Infrastructure [1]	●	●
1736/Upgrade	●	
IEEE 519/Report	●	●

[1] The WiFi Infrastructure license is complimentary and enabled when you register the Logger at www.fluke.com.

WiFi Infrastructure

This license activates the connection to a WiFi infrastructure. See page 58 for details.

1736/Upgrade

The upgrade license activates the advanced analysis features of the 1738 on a 1736 Logger.

Features are:

- Power Quality assessment according to EN 50160: "voltage characteristics of electricity supplied by public distribution networks."

  This includes the PQ Health logging overview screen with pass/fail indication of all supported PQ

parameters and the detailed harmonic limits validation in firmware and software. See page 21 for more information.

- RMS profile and wave shape recordings on voltage or current events

IEEE 519/Report

The IEEE 519/Report license enables a validation of voltage and current harmonics according to the standard IEEE 519: "IEEE recommended practice and requirements for harmonic control in electric power systems."

License Activation

To activate a license from a PC:

1. Go to www.fluke.com.
2. Select **Brand** > **Fluke Industrial**.
3. Select **Product Family** > **Power Quality Tools**.
4. Select **Model Name** > **Fluke 1736** or **Fluke 1738**.
5. Enter the serial number of the Logger.

   Note

   You must enter the serial number correctly. The serial number is found in the Status Information screen or on the back decal of the Logger. See page 46 for more information about the Status Information screen. Do not use the serial number of the power supply module.
6. Enter the license key from the license activation letter. The web form supports up to two license keys. You can enable licensed features at a later time by returning to the web registration page.

   Note

   The activation of the WiFi Infrastructure does not require a license key.
7. Complete all the fields and submit the form.

   An e-mail with the license file is sent to your e-mail address.
8. Create a folder named "Fluke173x" on a USB flash drive. Do not use spaces in the file name. Make sure the USB is formatted with FAT or FAT32 file system. (In Windows, USB flash drives ≥32 GB can be formatted with FAT/FAT32 only with 3rd party tools.)
9. Copy the license file (*.txt) to this folder.
10. Make sure the Logger is powered from mains and turned on.
11. Insert the flash drive into the Logger. The USB Transfer screen pops up and offers the license activation.
12. Proceed with SAVE ENTER. A message window informs you when the activation is complete.

Maintenance

If the Logger is used appropriately it does not require special maintenance or repair. Maintenance work may be executed only by trained and qualified personnel. This work may only be done at a company related service center within the guarantee period. See www.fluke.com for locations and contact information of Fluke Service Centers worldwide.

⚠⚠ Warning

To prevent possible electrical shock, fire, or personal injury:

- **Do not operate the Product with covers removed or the case open. Hazardous voltage exposure is possible.**
- **Remove the input signals before you clean the Product.**
- **Use only specified replacement parts.**
- **Have an approved technician repair the Product.**

How to Clean

⚠ Caution

To avoid damage, do not use abrasives or solvents on this instrument.

If the Logger is dirty, wipe it off carefully with a damp cloth (without cleaning agents). Mild soap may be used.

Battery Replacement

The Logger has an internal rechargeable Lithium-ion battery.

To replace the battery:

1. Remove the Power Supply.
2. Unscrew the four screws and remove the battery door.
3. Replace the battery.
4. Fasten the battery door.

⚠ Caution

To prevent damage to the Product, use only original Fluke batteries.

Calibration

As an additional service we offer the regular examination and calibration of your Logger. The recommended calibration cycle is 2 years.

More information about how to contact Fluke is on page 2.

Service and Parts

Replacement parts and accessories are listed in Table 7 and shown in Figure 12. To order parts and accessories, see *How to Contact Fluke*.

Table 7. Replacement Parts

Ref.	Description	Qty.	Fluke Part or Model Number
①	Power Supply: 1736	1	4583625
	Power Supply: 1738	1	4717789
②	Battery Door	1	4388072
③	Battery Pack, Li ion 3.7 V 2500 mAh	1	4146702
④	USB Cable	1	4704200
⑤	Input Decal, country specific (US, Canada, Europe/UK, UK/old, China)	1	see Figure 7 on page 15
⑥	Line Cord, country specific (N. American, Europe, UK, Australia, Japan, India/S. Africa, Brazil)	1	see Figure 1 on page 5
⑦	Test Leads 0.1 m Red/Black, 1000 V CAT III	1 set	4715389
⑧	Test Leads 1.5 m Red/Black, 1000 V CAT III	1 set	4715392
⑨	Color-coded Wire Clips	1 set	4394925
⑩	USB Flash Drive (includes User Manuals and installer for PC software)	1	NA

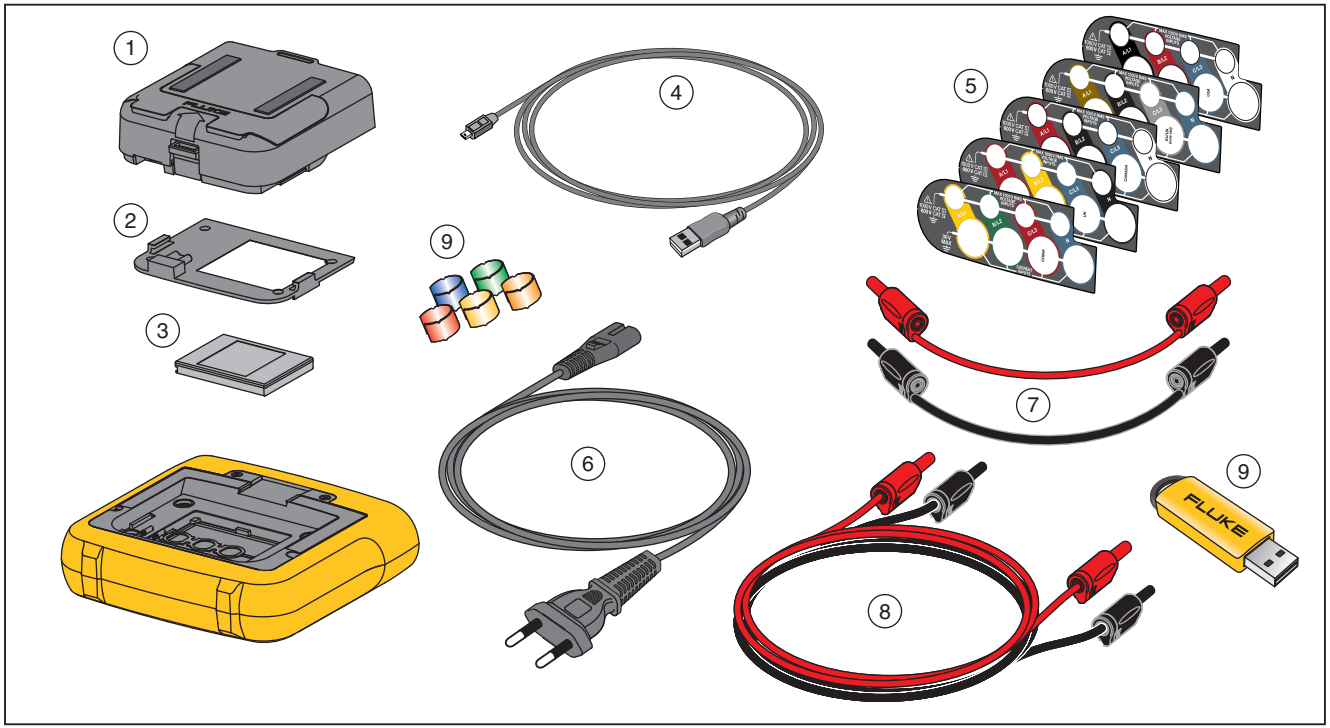

hcf060.eps

Figure 12. Replacement Parts

Energy Analyze Plus Software

The Power Logger includes the Fluke Energy Analyze Plus software that lets you do tasks from a computer.

You can:

- Download campaign results for further processing and archiving.
- Analyze energy or load profiles, including zoom-in and zoom-out on details.
- Analyze voltage and current harmonics.
- Review the voltage and current events that occur during the campaign.
- Analyze the RMS profile and wave shapes recorded on events (1738 or 1736 with 1736/Upgrade license).
- Review the key power quality parameters.
- Create a EN 50160 compliance report (1738 or 1736 with 1736/Upgrade license)
- Perform an IEEE 519 analysis and create a pass/fail report (requires IEEE 519/Report license).
- Add comments, annotations, pictures, and other supplementary information to campaign data.
- Overlay data from different campaigns to identify and document changes.
- Create a report from the analysis you performed.
- Export measurement results for further processing using a third party tool.

System Requirements

The computer hardware requirements for the Energy Analyze software are:

- Free Hard Disk space 50 MB,
  >10 GB (for measurement data) recommended
- Installed Memory:
  - 1 GB minimum for 32-bit systems
  - ≥2 GB recommended for 32-bit systems,
    ≥4 GB recommended for 64-bit systems
- Monitor, 1280 x 1024 (@4:3) or 1440 x 900 (@16:10), wide-screen (16:10) at higher resolution recommended
- USB 2.0 ports
- Windows 7, Windows 8.x, and Windows 10 (32/64-bit)

Note

Windows 7 Starter edition and Windows 8 RT are not supported.

PC Connections

To connect the PC to the Logger:

1. Power on the computer and the Logger.
2. Install the Energy Analyze Software.
3. Connect the USB cable to the USB ports of the computer and the Logger as shown in Figure 13.

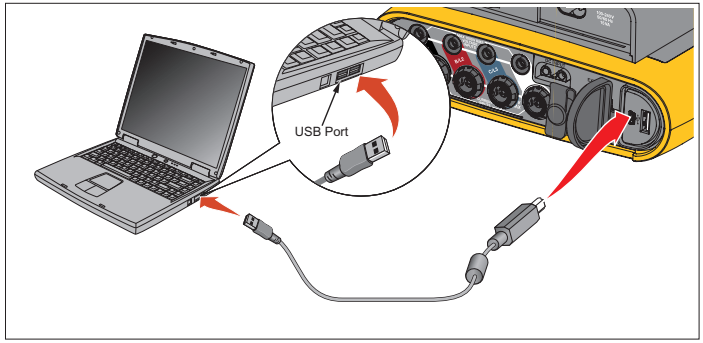

hcf024.eps

Figure 13. Power Logger to PC Connections

See the *Energy Analyze Plus Online Help* for information about how to use the software.

WiFi Support

With the USB WiFi dongle you can use the Fluke Connect App for asset management, trending and sharing measurement data, wirelessly control the Logger with a PC/smartphone/tablet, and download measurement data and screenshots to the Energy Analyze Plus software.

WiFi Setup

The Logger supports a direct connection between a PC, smartphone, or tablet. It also supports a connection from the Logger to an access point of a WiFi infrastructure.

Note

Connection to the WiFi infrastructure requires the license for WiFi Infrastructure.

Before you setup a connection, see page 6 for information about how to install the WiFi or WiFi/BLE adapter. Make sure the Logger is turned on and in the range of 5 to 10 meters (depends on the connection mode) to the client or access point.

To set the connection mode and see the WiFi connection details from the Logger:

1. Push MEMORY SETTINGS.
2. Push F4 (Instrument Settings)
3. Push F1 (Tools)
4. Push ▲▼ to highlight **WiFi Configuration** and push SAVE ENTER to confirm. Or, touch **WiFi Configuration** touch target.
5. Push ▼▲ to highlight **Mode** and push SAVE ENTER.
6. Select **Direct Connection** or **WiFi-Infrastructure** in the list and confirm with SAVE ENTER.

WiFi Direct Connection

The WiFi connection uses WPA2-PSK (pre-shared key) with AES encryption. The passphrase shown on the screen is required to establish a connection from a client to the device.

1. On the client, go to the list of available WiFi networks and look for a network with the name:
   “Fluke173x<serial-no>”
   for example: “Fluke1736<123456789>”.
2. Enter the passphrase provided on the WiFi Configuration screen when you are asked. Depending on the operating system of the client, the passphrase is also called Security Key, Password, or similar.

   After a few seconds the connection is established.

   Note

   On Windows, the WiFi icon in the notification area of the task bar is shown with an exclamation mark . The exclamation mark indicates that this WiFi interface does not provide an Internet access. This is normal since the Logger is not a gateway to the Internet.

WiFi-Infrastructure

The WiFi connection requires the WiFi-Infrastructure license and supports WPA2-PSK. This connection requires a DHCP service running in the access point to assign IP addresses automatically.

To establish a connection with a WiFi-access point:

1. In WiFi Configuration screen, push ▲▼ to highlight **Name (SSID)** and push SAVE ENTER.

   A list of access points within range shows. Icons show the field strength. Avoid access points with no or only one green bar since they are too far away for a reliable connection.
2. Push ▲▼ to highlight an access point and push SAVE ENTER to confirm.
3. In WiFi Configuration screen, push ▲▼ to highlight **Passphrase** and push SAVE ENTER.
4. Enter the passphrase (also called Security Key or Password) and push SAVE ENTER. The passphrase has 8 to 63 characters and is configured in the access point.

   The assigned IP address shows when the connection is successful.

Remote Control

You can remotely control the instrument with a free third-party VNC client available for Windows, Android, Apple iOS, and Windows Phone after the WiFi connection is setup. VNC stands for Virtual Network Computing and allows you to see the screen content, push the buttons, and touch the targets.

Tested VNC clients that work with the Logger are listed in Table 8.

Table 8. VNC Clients

Operating System	Program	Available from:
Windows 7/8.x/10	TightVNC	www.tightvnc.org
Android	bVNC[1]	Google Play Store
iOS (iPhone, iPad)	Mocha VNC[1]	Apple App Store
Windows Phone	Mocha VNC[1]	Windows Phone Market
[1] The free version provides all features required for communication.		

Configuration

IP Address

- Direct Connection 10.10.10.1
- WiFi Infrastructure ..... use IP address shown in WiFi configuration screen

Port ..... 5900 (default)

The VPN user name and password fields are not configured and can be left blank.

Wireless Access to PC Software

No further setup is required to use WiFi communication with the *Fluke Energy Analyze Plus* software once the WiFi connection to the device is setup. The WiFi connection supports downloading the measurement files and screenshots and synchronizing the time. The selected communication media is shown in brackets. Refer to the online help for details about how to use the PC software.

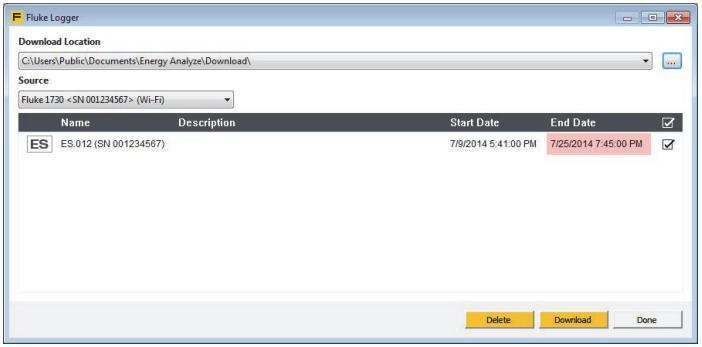

hcf61.jpg

Fluke Connect™ Wireless System

The Logger supports the Fluke Connect™ Wireless System (may not be available in all regions). Fluke Connect™ is a system that wirelessly connects your Fluke test tools with an app on your smartphone or tablet. It can show measurements from the Logger on your smartphone or tablet screen, save measurements to the asset's EquipmentLog™ history in the Fluke Cloud™ storage, and share the measurements with your team.

More information about how to enable the radio is on page 46.

Fluke Connect App

The Fluke Connect app works with the Apple and Android products. The app is available for download from the Apple App Store and Google play.

How to access Fluke Connect:

1. Turn on the Logger.
2. On your smartphone, go to **Settings > WiFi**.
3. Select the WiFi network that begins with "Fluke173x<serial-no>".
4. Go to the Fluke Connect App and select the Logger from the list.

Go to www.flukeconnect.com for more information about how to use the app.

Wiring Configurations

V, A, Hz, +

		Single Phase Single Phase IT	Split Phase (2P-3W)	3-Φ Wye 3-Φ Wye IT (3P-4W)	3-Φ Wye Balanced	3-Φ Delta (3P-3W)	2 Element Delta Aron/ Blondel	3-Φ Delta Open Leg (3P-3W)	3-Φ High Leg Delta	Balanced 3-Φ Delta
V_{AN}[1]	V	●	●	●	●					
V_{BN}[1]	V		●	●	○					
V_{CN}[1]	V			●	○					
V_{AB}[1]	V		●[2]	●[2]	○[2]	●	●	●	●	●
V_{BC}[1]	V			●[2]	○[2]	●	●	●	●	○
V_{CA}[1]	V			●[2]	○[2]	●	●	●	●	○
unbal	%			●		●	●	●	●	
I_A	A	●	●	●	●	●	●	●	●	●
I_B	A		●	●	○	●	△	●	●	○
I_C	A			●	○	●	●	●	●	○
I_N	A		●	●	X					
f	Hz	●	●	●	●	●	●	●	●	●
Aux 1, 2	mV, user defined	●	●	●	●	●	●	●	●	●
h01-50[3] THD V_A[3]	V, % %	●	●	●	●					
h01-50[3] THD V_B[3]	V, % %		●	●						
h01-50[3] THD V_C[3]	V, % %			●						
h01-50[3] THD V_{AB}[3]	V, % %					●	●	●	●	●
h01-50[3] THD V_{BC}[3]	V, % %					●	●	●	●	

V, A, Hz, + (cont.)

		Single Phase Single Phase IT	Split Phase (2P-3W)	3-Φ Wye 3-Φ Wye IT (3P-4W)	3-Φ Wye Balanced	3-Φ Delta (3P-3W)	2 Element Delta Aron/ Blondel	3-Φ Delta Open Leg (3P-3W)	3-Φ High Leg Delta	Balanced 3-Φ Delta
h01-50[3] THD V_{CA}[3]	V, % %					●	●	●	●	
h01-50 THD I_A TDD I_A[4]	A, % % %	●	●	●	●	●	●	●	●	●
h01-50 THD I_B TDD I_B[4]	A, % % %		●	●		●	●	●	●	
h01-50 THD I_C TDD I_C[4]	A, % % %			●		●	●	●	●	
h01-50 THC I_N	A A		●	●	X					

● = Measured values
[1] Simulated in load studies if U_{nom} is specified
[2] Secondary displayed values
[3] Not available in load studies
[4] Requires IEEE 519/Report License
X = Optional for harmonics analysis
△ = Calculated values
○ = Simulated values (derived from phase 1)

Power

		Single Phase Single Phase IT	Split Phase (2P-3W)	3-Φ Wye 3-Φ Wye IT (3P-4W)	3-Φ Wye Balanced	3-Φ Delta (3P-3W)	2 Element Delta Aron/Blondel	3-Φ Delta Open Leg (3P-3W)	3-Φ High Leg Delta	3-Φ Delta Balanced
P_A, $P_{A\ fund}$[3]	W	●	●	●	●					
P_B, $P_{B\ fund}$[3]	W		●	●	○					
P_C, $P_{C\ fund}$[3]	W			●	○					
P_{Total}, $P_{Total\ fund}$[3]	W		●	●	○	●	●	●	●	●
Q_A, $Q_{A\ fund}$[3]	var	●	●	●	●					
Q_B, $Q_{B\ fund}$[3]	var		●	●	○					
Q_C, $Q_{C\ fund}$[3]	var			●	○					
Q_{Total}, $Q_{Total\ fund}$[3]	var			●	○	●	●	●	●	●
S_A[1]	VA	●	●	●	●					
S_B[1]	VA		●	●	○					
S_C[1]	VA			●	○					
S_{TOTAL}[1]	VA		●	●	○	●	●	●	●	●
PF_A[3]		●	●	●	●					
PF_B[3]			●	●	○					
PF_C[3]				●	○					
PF_{Total}[3]			●	●	○	●	●	●	●	●

● = Measured values
[1] Simulated in load studies if U_{nom} is specified
[2] Secondary displayed values
[3] Not available in load studies
○ = Simulated values (derived from phase 1)

Glossary

Unbalance (u2)

Supply Voltage Unbalance

Condition in a three phase system in which the RMS. values of the line-to-line voltages (fundamental component), or the phase angles between consecutive line voltages, are not all equal. The unbalance value is the ratio of the negative sequence to the positive sequence in percent and is typically in the range between 0% and 2%.

h01

Fundamental Frequency Component

RMS value of the fundamental frequency component of voltage or current.
Sub grouping according to IEC 61000-4-7 is applied.

h02 … h50

Harmonic Component
RMS value of the harmonic component of voltage or current.
Sub grouping according to IEC 61000-4-7 is applied.

THD

Total Harmonic Distortion
The ratio of the RMS value of the sum of all the voltage or current harmonic components h02 … h50 to the RMS value of the fundamental component h01 of voltage or current.

THC

Total Harmonic Content

The RMS value of the sum of all the voltage or current harmonic components h02 … h50.

TDD[1]

Total Demand Distortion
The ratio of the RMS value of the sum of all the current harmonic components h02 … h50 to I_L, the maximum demand current.

I_L[1]

Maximum Demand Load Current
The current value is established at the point of common coupling and should be taken as the sum of the currents corresponding to the maximum demand during each of the twelve previous months divided by 12.

This value is required to calculate TDD and to determine the applicable current harmonic limits defined by IEEE 519. It is a user input in measurement configuration.

I_{SC}[1]

Maximum Short Circuit Current at Point of Common Coupling

This value is required to determine the applicable current harmonic limits defined by IEEE 519. It is a user input in measurement configuration.

[1] Requires IEEE 519/Report License.

General Specifications

Color LCD Display ..... 4.3-inch active matrix color TFT, 480 pixels x 272 pixels, resistive touch panel

Power/Charging/LED Indicator

Warranty

1736/1738 and Power Supply ..... 2 years (battery not included)

Accessories ..... 1 year

Calibration Cycle ..... 2 years

Dimensions

1736/1738..... 19.8 cm x 16.7 cm x 5.5 cm (7.8 in x 6.6 in x 2.2 in)

Power Supply ..... 13.0 cm x 13.0 cm x 4.5 cm (5.1 in x 5.1 in x 1.8 in)

1736/1738 with power supply attached ..... 19.8 cm x 16.7 cm x 9 cm (7.8 in x 6.6 in x 4.0 in)

Weight

1736/1738..... 1.1 kg (2.5 lb)

Power Supply ..... 400 g (0.9 lb)

Tamper Protection ..... Kensington lock

Environmental Specifications

Operating Temperature ..... –10 °C to +50 °C (+14 °F to +122 °F)

Storage Temperature..... –20 °C to +60 °C (–4 °F to +140 °F), with battery: –20 °C to +50 °C (–4 °F to +122 °F)

Operating Humidity ..... <10 °C (<50 °F) non condensing

10 °C to 30 °C (50 °F to 86 °F) ≤95 %

30 °C to 40 °C (86 °F to 104 °F) ≤75 %

40 °C to 50 °C (104 °F to 122 °F) ≤45 %

Operating Altitude ..... 2,000 m (up to 4,000 m derate to 1000 V CAT II/600 V CAT III/300 V CAT IV)

Storage Altitude ..... 12,000 m

IP Rating ..... IEC 60529:IP50, in connected condition with protection caps in place

Vibration ..... MIL-T-28800E, Type 3, Class III, Style B

Safety

IEC 61010-1

IEC Mains Input ..... Overvoltage Category II, Pollution Degree 2

Voltage Terminals..... Overvoltage Category IV, Pollution Degree 2

IEC 61010-2-033 ..... CAT IV 600 V / CAT III 1000 V

Electromagnetic Compatibility (EMC)

International ..... IEC 61326-1: Industrial

CISPR 11: Group 1, Class A

Group 1: Equipment has intentionally generated and/or uses conductively-coupled radio frequency energy that is necessary for the internal function of the equipment itself.

Class A: Equipment is suitable for use in all establishments other than domestic and those directly connected to a low-voltage power supply network that supplies buildings used for domestic purposes. There may be potential difficulties in ensuring electromagnetic compatibility in other environments due to conducted and radiated disturbances.

Emissions that exceed the levels required by CISPR 11 can occur when the equipment is connected to a test object.

Korea (KCC) ..... Class A Equipment (Industrial Broadcasting & Communication Equipment)

Class A: Equipment meets requirements for industrial electromagnetic wave equipment and the seller or user should take notice of it. This equipment is intended for use in business environments and not to be used in homes.

USA (FCC)..... 47 CFR 15 subpart B. This product is considered an exempt device per clause 15.103.

Wireless Radio with Adapter

Frequency Range ..... 2412 MHz to 2462 MHz

Output Power..... <100 mW

Electrical Specifications

Power Supply

Voltage Range	nominal 100 V to 500 V (85 V min to 550 V max) using safety plug input
Mains Power	nominal 100 V to 240 V (85 V min to 265 V max) using IEC 60320 C7 input (figure 8 power cord)
Power consumption	Maximum 50 VA (max. 15 VA when powered using IEC 60320 input)
Standby Power	<0.3 W only when powered using IEC 60320 input
Efficiency	≥68.2 % (in accordance with energy efficiency regulations)
Mains Frequency	50/60 Hz ±15 %
Battery Power	Li-ion 3.7 V, 9.25 Wh, customer-replaceable
On-Battery Runtime	Up to 4 hr (up to 5.5 hr in energy saving mode)
Charging Time	<6 hr

Voltage Inputs

Number of Inputs	4 (3 phases and neutral)
Maximum Input Voltage	1000 V_{rms} (1700 V_{pk}) phase to neutral
Input Impedance	10 MΩ each phase to neutral
Bandwidth	42.5 Hz – 3.5 kHz
Scaling	1:1, variable

Current Inputs

Number of Inputs	4, mode selected automatically for attached sensor
Current Sensor Output Voltage	
Clamp	500 mV_{rms} / 50 mV_{rms}; CF 2.8
Rogowski Coil	150 mV_{rms} / 15 mV_{rms} at 50 Hz, 180 mV_{rms} / 18 mV_{rms} at 60 Hz; CF 4; all at nominal probe range
Range	1 A to 150 A / 10 A to 1500 A with iFlex1500-12
	3 A to 300 A / 30 A to 3000 A with iFlex3000-24
	6 A to 600 A / 60 A to 6000 A with iFlex6000-36
	40 mA to 4 A / 0.4 A to 40 A with 40 A clamp i40s-EL
Bandwidth	42.5 Hz – 3.5 kHz
Scaling	1:1, variable

Auxiliary Inputs

Wired Connection

Number of Inputs 2

Input Range ..... 0 V dc to ± 10 V dc

Wireless Connection (requires WiFi/BLE adapter USB1 FC)

Number of Inputs 2

Supported Modules..... Fluke Connect 3000 series

Acquisition ..... 1 reading/s

Scale factor..... Format: mx + b (Gain and offset) user configurable

Displayed units ..... User configurable (up to 8 characters, for example °C, psi, or m/s)

Data Acquisition

Resolution..... 16-bit synchronous sampling

Sampling Frequency..... 10.24 kHz at 50/60 Hz, synchronized to mains frequency

Input Signal Frequency..... 50/60 Hz (42.5 Hz to 69 Hz)

Wiring Configurations ..... 1-Φ, 1-Φ IT, Split phase, 3-Φ wye, 3-Φ wye IT, 3-Φ wye balanced, 3-Φ delta, 3-Φ Aron/Blondel (2-element delta), 3-Φ delta open leg, 3-Φ high leg delta, 3-Φ delta balanced. Currents only (load studies)

Data Storage..... Internal flash memory (not user replaceable)

Memory Size..... Typical 10 logging sessions of 8 weeks with 1-minute intervals and 100 events The number of possible logging sessions and logging period depends on user requirements.

Basic Interval

Measured Parameter..... Voltage, Current, Aux, Frequency, THD V, THD A, Power, Power Factor, fundamental Power, DPF, Energy

Averaging Interval..... User selectable: 1 sec, 5 sec, 10 sec, 30 sec, 1 min, 5 min, 10 min, 15 min, 30 min

Total Harmonic Distortion ..... THD for voltage and current is calculated on 25 harmonics

Averaging time min/max values

Voltage..... Full cycle RMS (20 ms at 50 Hz, 16.7 ms at 60 Hz)

Current..... Half cycle RMS (10 ms at 50 Hz, 8.3 ms at 60 Hz)

Aux, Power ..... 200 ms

Demand Interval (Energy Meter Mode)

Measured Parameter..... Energy (Wh, varh, VAh), PF, Maximum Demand, Cost of Energy

Averaging Interval..... User selectable: 5 min, 10 min, 15 min, 20 min, 30 min, off

Power Quality Measurements

Measured Parameter	Voltage, Frequency, Unbalance, Voltage Harmonics, THD V, Current Harmonics, THD A, and TDD (requires IEEE519/Report license)
Averaging Interval	10 min
Individual Harmonics	2nd … 50th
Total Harmonic Distortion	Calculated on 50 harmonics
Events	Voltage: Dips, Swells, Interruptions Current: Inrush Current
Triggered Recordings	1738 or 1736 with 1736/Upgrade license Half cycle RMS of Voltage and Current Waveform of Voltage and Current

Standards Compliance

Harmonics	IEC 61000-4-7: Class 1 IEEE 519 (short time harmonics, requires IEEE519/Report license)
Power Quality	IEC 61000-4-30 Class S, IEC62586-1 (PQI-S device)
Power	IEEE 1459
Power Quality Compliance	1738 or 1736 with 1736/Upgrade license EN50160 (for measured parameters)

Interfaces

USB-A	File transfer via USB Flash Drive, Firmware updates, max. supply current: 120 mA
WiFi	
Supported modes	Direct connection and connection to infrastructure (requires WiFi-Infrastructure license)
Security	WPA2-AES with pre-shared key
Bluetooth	read auxiliary measurement data from Fluke Connect 3000 series modules (requires WiFi/BLE adapter USB1 FC)
USB-mini	Data download device to PC
Extension port	Accessories

Accuracy at Reference Conditions

Parameter			Range	Max. Resolution	Intrinsic Accuracy at Reference Conditions (% of Reading + % of Range)
Voltage			1000 V	0.1 V	±(0.2 % + 0.01 %)
Current	Direct Input	Rogowski Mode	15 mV	0.01 mV	±(0.3 % + 0.02 %)
			150 mV	0.1 mV	±(0.3 % + 0.02 %)
		Clamp Mode	50 mV	0.01 mV	±(0.2 % + 0.02 %)
			500 mV	0.1 mV	±(0.2 % + 0.02 %)
	1500 A Flex		150 A	0.01 A	±(1 % + 0.02 %)
			1500 A	0.1 A	±(1 % + 0.02 %)
	3000 A Flexi		300 A	1 A	±(1 % + 0.03 %)
			3000 A	10 A	±(1 % + 0.03 %)
	6000 A Flexi		600 A	1 A	±(1.5 % + 0.03 %)
			6000 A	10 A	±(1.5 % + 0.03 %)
	40 A		4 A	1 mA	±(0.7 % + 0.02 %)
			40 A	10 mA	±(0.7 % + 0.02 %)
Frequency			42.5 Hz to 69 Hz	0.01 Hz	±0.1 %
Aux Input			±10 Vdc	0.1 mV	±(0.2 % + 0.02 %)
Voltage Min/Max			1000 V	0.1 V	±(1 % + 0.1 %)
Current Min/Max			defined by accessory	defined by accessory	±(5 % + 0.2 %)
THD on Voltage			1000 %	0.1 %	±(2.5 % + 0.05 %)
THD on Current			1000 %	0.1 %	±(2.5 % + 0.05 %)
Voltage Harmonic 2 to 50			1000 %	0.1 %	±(2.5 % + 0.05 %)
Unbalance			100 %	0.1 %	±0.15 %

Power/Energy					
Parameter	**Direct Input [1]**	**iFlex1500-12**	**iFlex3000-24**	**iFlex6000-36**	**i40S-EL**
	Clamp: 50 mV/500 mV Rogowski: 15 mV/150 mV	150 A/1500 A	300 A/3000 A	600/6000 A	4 A/40 A
Power Range W, VA, var	Clamp: 50 W/500 W Rogowski: 15 W/150 W	150 kW/1.5 MW	300 kW/3 MW	600 kW/6 MW	4 kW/40 kW
Max. Resolution W, VA, var	0.1 W	0.01 kW/0.10 kW	1 kW/10 kW	1 kW/10 kW	1 W/10 W
Max. Resolution PF, DPF	0.01				
Phase (Voltage to Current) [1]	±0.2 °	±0.28 °			±1 °
[1] Only for calibration laboratories					

Intrinsic Uncertainty ±(% of measurement value + % of power range)						
Parameter	**Influence Quantity**	**Direct Input [1]**	**iFlex1500-12**	**iFlex3000-24**	**iFlex6000-36**	**i40S-EL**
		Clamp: 50 mV/500 mV Rogowski: 15 mV/150 mV	150 A/1500 A	300 A/3000 A	600/6000 A	4 A/40 A
Active Power P **Active Energy E_a**	PF ≥0.99	0.5 % + 0.005 %	1.2 % + 0.005 %	1.2 % + 0.0075 %	1.7 % + 0.0075 %	1.2 % + 0.005 %
	0.1≤ PF <0.99	$\left(0.5+\frac{\sqrt{1-PF^2}}{3\times PF}\right)\%$ $+0.005\ \%$	$\left(1.2+\frac{\sqrt{1-PF^2}}{2\times PF}\right)\%$ $+\ 0.00\ 5\ \%$	$\left(1.2+\frac{\sqrt{1-PF^2}}{2\times PF}\right)\%$ $+\ 0.0075\ \%$	$\left(1.7+\frac{\sqrt{1-PF^2}}{2\times PF}\right)\%$ $+\ 0.0075\ \%$	$\left(1.2+1.7\times\frac{\sqrt{1-PF^2}}{PF}\right)\%$ $+\ 0.005\ \%$
Apparent Power S **Apparent Energy E_{ap}**	0 ≤ PF ≤1	0.5 % + 0.005 %	1.2 % + 0.005 %	1.2 % + 0.0075 %	1.7 % + 0.0075 %	1.2 % + 0.005 %
Reactive Power Q **Reactive Energy E_r**	0 ≤ PF ≤1	2.5 % of measured apparent power/energy				
Power Factor PF **Displacement Power Factor DPF/cosφ**	-	Reading ± 0.025				
Additional uncertainty (% of power high-range)	V_{P-N} >250 V	0.015 %	0.015 %	0.0225 %	0.0225 %	0.015 %

[1] Only for calibration laboratories
Reference Conditions:
Environmental: 23 °C ±5 °C, instrument operating for at least 30 minutes, no external electrical/magnetic field, RH <65 %
Input conditions: CosΦ/PF=1, Sinusoidal signal f=50/60 Hz, power supply 120 V/230 V ±10 %.
Current and power specifications: Input voltage 1ph: 120 V/230 V or 3ph wye/delta: 230 V/400 V
Input current > 10 % of current range
Primary conductor of clamps or Rogowski coil in center position
Temperature Coefficient: Add 0.1 x specified accuracy for each degree C above 28 °C or below 18 °C

Example:
Measurement at 120 V/16 A using an iFlex1500-12 in low range. Power Factor is 0.8
Active power uncertainty σ_P:
$\sigma_P = \pm\left(\left(1.2\ \% + \frac{\sqrt{1-0.8^2}}{2\times 0.8}\right) + 0.005\ \% \times P_{Range}\right) = \pm(1.575\ \% + 0.005\ \% \times 1000\ V \times 150\ A) = \pm(1.575\ \% + 7.5\ W)$
The uncertainty in W is $\pm(1.575\ \% \times 120\ V \times 16\ A \times 0.8 + 7.5\ W) = \pm 31.7$ W
Apparent power uncertainty σ_S:
$\sigma_S = \pm\left(1.2\ \% + 0.005\ \% \times S_{Range}\right) = \pm(1.2\ \% + 0.005\ \% \times 1000\ V \times 150\ A) = \pm(1.2\ \% + 7.5\ VA)$
The uncertainty in VA is $\pm(1.2\ \% \times 120\ V \times 16\ A + 7.5\ VA) = \pm 30.54$ VA
Reactive/non-active power uncertainty σ_Q:
$\sigma_Q = \pm(2.5\ \% \times S) = \pm(2.5\ \% \times 120\ V \times 16\ A) = \pm 48\ var$

In case of a measured voltage that is >250 V, the additional error is calculated with:
$Adder = 0.015\ \% \times S_{High\ Range} = 0.015\ \% \times 1000\ V \times 1500\ A = 225$ W / VA / var

iFlex Probe Specifications

Measuring range

iFlex 1500-12 ..... 1 to 150 A ac / 10 to 1500 A ac

iFlex 3000-24 ..... 3 to 300 A ac / 30 to 3000 A ac

iFlex 6000-36 ..... 6 to 600 A ac / 60 to 6000 A ac

Nondestructive current..... 100 kA (50/60 Hz)

Intrinsic Error at reference condition[1] ..... ±0.7% of reading

Accuracy 173x + iFlex

iFlex 1500-12 & iFlex 3000-24 ..... ±(1 % of reading + 0.02 % of range)

iFlex 6000-36 ..... ±(1.5 % of reading + 0.03 % of range)

Temperature Coefficient over operating temperature range

iFlex 1500-12 & iFlex 3000-24 ..... 0.05 % of reading / °C (0.09 % of reading / °F)

iFlex 6000-36 ..... 0.1 % of reading / °C (0.18 % of reading / °F)

Positioning error with position of conductor in the probe window (see Figure 14).

	iFlex1500-12, iFlex3000-24	iFlex6000-36
Probe Window A	±(1 % of reading + 0.02 % of range)	±(1.5 % of reading + 0.03 % of range)
Probe Window B	±(1.5 % of reading + 0.02 % of range)	±(2.0 % of reading + 0.03 % of range)
Probe Window C	±(2.5 % of reading + 0.02 % of range)	±(4 % of reading + 0.03 % of range)

External magnetic field rejection in reference to external current (with cable >100 mm from the head-coupling and r-coil) ..... 40 dB

Phase shift ..... < ±0.5°

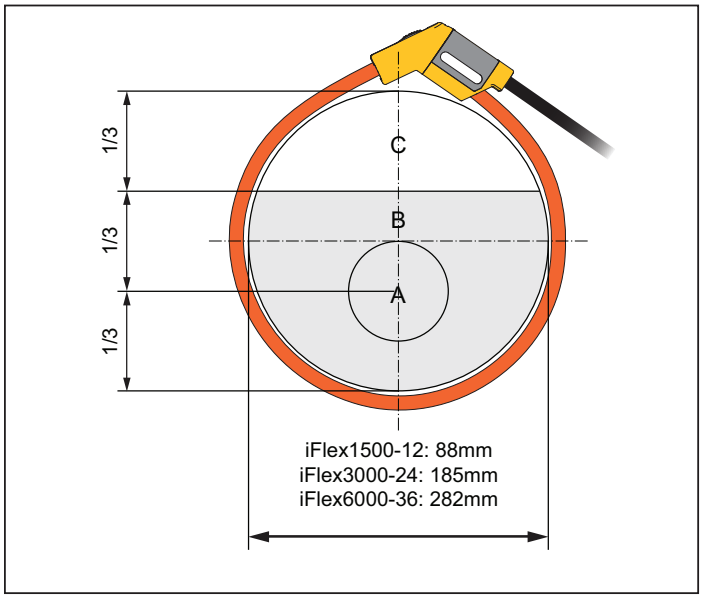

hcf057.eps

Figure 14. iFlex Probe Window

Bandwidth ..... 10 Hz to 23.5 kHz

Frequency derating ..... I x f ≤385 kA Hz

Working Voltage..... 1000 V CAT III, 600 V CAT IV

[1] Reference Condition:

- Environmental: 23 °C ±5 °C, no external electrical/magnetic field, RH 65 %
- Primary conductor in center position

Transducer length
- iFlex 1500-12 ..... 305 mm (12 in)
- iFlex 3000-24 ..... 610 mm (24 in)
- iFlex 6000-36 ..... 915 mm (36 in)

Transducer cable diameter ..... 7.5 mm (0.3 in)
Minimum bending radius ..... 38 mm (1.5 in)
Output cable length
iFlex 1500-12 ..... 2 m (6.6 ft)
iFlex 3000-24 & iFlex 6000-36 ..... 3 m (9.8 ft)
Weight
- iFlex 1500-12 ..... 115 g
- iFlex 3000-24 ..... 170 g
- iFlex 6000-36 ..... 190 g

Material
- Transducer cable ..... TPR
- Coupling ..... POM + ABS/PC
- Output cable ..... TPR/PVC

Operating Temperature ..... -20 °C to +70 °C (-4 °F to 158°F) temperature of conductor under test shall not exceed 80°C (176°F)
Storage temperature ..... -40 °C to +80 °C (-40 °F to 176 °F)
Operating relative humidity, ... 15 % to 85 % noncondensing
IP Rating ..... IEC 60529:IP50
Operating Altitude ..... 2000 m (6,500 ft) up to 4000 m (13,000 ft) derate to 1000 V CAT II/600 V CAT III/ 300 V CAT IV
Storage Altitude ..... 12 km (40,000 ft)
Warranty ..... 1 year

i40s-EL Current Clamp Specifications

See Table 9 for setup instructions.

Table 9. i40s-EL Setup

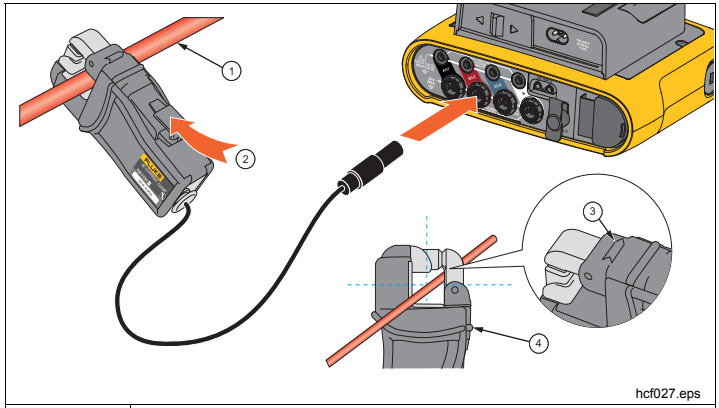

1	Single Insulated current carrying conductor
2	Release button
3	Load direction arrow
4	Tactile barrier

Measuring range ..... 40 mA to 4 Aac / 0.4 Aac to 40 Aac
Crest factor ..... ≤3
Nondestructive current ..... 200 A (50/60Hz)
Intrinsic Error at reference condition ..... ±0.5% of reading
Accuracy 173x + clamp ..... ±(0.7 % of reading + 0.02% of range)

Phase shift	
<40 mA	unspecified
40 mA to 400 mA	< ± 1.5°
400 mA to 40 A	< ± 1°
Temperature Coefficient over operating temperature range	0.015 % of reading / °C 0.027 % of reading / °F
Influence of adjacent conductor	≤15 mA/A (@ 50/60 Hz)
Influence of conductor position in jaw opening	±0.5 % of reading (@ 50/60 Hz)
Bandwidth	10 Hz to 2.5 kHz
Working Voltage	600 V CAT III, 300 V CAT IV

[1] Reference Condition:

- Environmental: 23 °C ±5 °C, no external electrical/magnetic field, RH 65 %
- Primary conductor in center position

Size (H x W x L)	110 mm x 50 mm x 26 mm (4.33 in x 1.97 in x 1.02 in)
Maximum conductor size	15 mm (0.59 in)
Output cable length	2 m (6.6 ft)
Weight	190 g (6.70 oz)
Material	Case ABS and PC Output cable: TPR/PVC
Temperature operating	-10 °C to +55 °C (-14 °F to 131 °F)
Temperature, non-operating	-20 °C to +70 °C (-4 °F to 158 °F)
Relative Humidity, operating	15 % to 85 % non-condensing
Max Operating Altitude	2000 m (6,500 ft) up to 4000 m (13,000 ft) derate to 600 V CAT II/300 V CAT IV
Max Storage Altitude	12 km (40,000 ft)
Warranty	1 year