Fiber Tests with Two Main Testers

If you have two main testers, you can use FiberInspector video probes at both ends of the cabling for faster inspections of fiber endfaces.

You can also use the second main tester as a remote tester for loss/length tests with CertiFiber Pro modules.

To use a main tester as a remote

Tap **TOOLS** then tap **Main as Remote**.

Chapter 6: Certify Fiber Cabling

Warning

Before you use the tester, read the safety information that starts on page 5.

Overview of Features

The Fluke Networks CertiFiber® Pro Optical Loss Test Set (OLTS) modules attach to Versiv™ 2 main and remote units to make rugged, hand-held testers that let you certify, troubleshoot, and document optical fiber cabling installations. The testers include these features:

- Measures optical power loss and length on dual-fiber, multimode cabling at 850 nm and 1300 nm (CFP-MM) or on dual-fiber singlemode cabling at 1310 nm and 1550 nm (CFP-SM). The four-wavelength module (CFP-QUAD) measures at 850 nm, 1300 nm, 1310 nm, and 1550 nm.
- Interchangeable connector adapters on input and output ports let you make reference and test connections that agree with ISO standards for most SFF (small form factor) connectors.
- Visual fault locator helps you find breaks, bad splices, and bends and verify fiber continuity and polarity.
- Optional FiberInspector™ video probe lets you inspect fiber endfaces and save the images in test reports.
- You can save approximately 30,000 fiber test results in the tester's internal memory. You can save more results on a removable flash drive.

Connectors, Keys, and LEDs

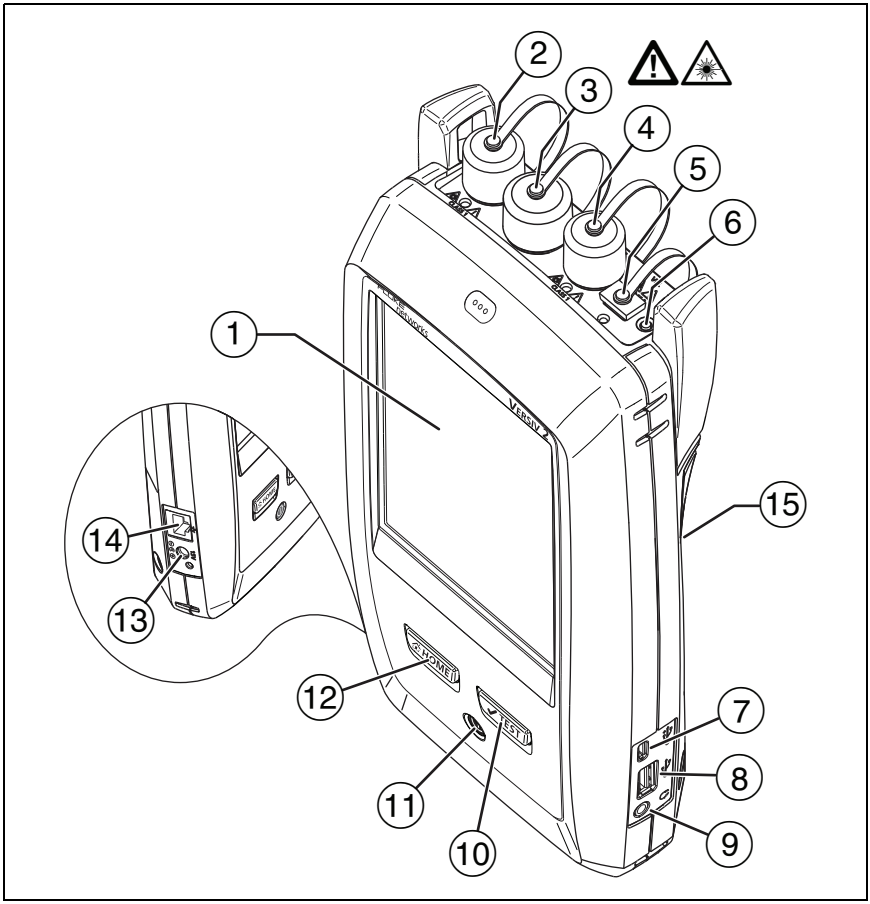

Figure 40. Main Tester Connectors, Keys, and LEDs (CFP-QUAD module shown)

① LCD display with touchscreen

② Singlemode output port with removable connector adapter and dust cap. This port transmits optical signals for loss and length measurements.

The LED below the output port is red when the port transmits 1310 nm and green for 1550 nm.

③ Input port with removable connector adapter and dust cap. This port receives optical signals for loss, length, and power measurements.

④ Multimode output port with removable connector adapter and dust cap. This port transmits optical signals for loss and length measurements.

The LED below the output port is red when the port transmits 850 nm and green for 1300 nm.

⑤ Universal fiber connector (with dust cap) for the visual fault locator. The connector accepts 2.5 mm ferrules. The LED below the connector shows the locator's mode.

⑥ Button to manually control the output ports (② and ④) and the visual fault locator (⑤).

⑦ Micro-AB USB port: This USB port lets you connect the tester to a PC so you can upload test results to the PC and install software updates in the tester.

⑧ Type A USB port: This USB host port lets you save test results on a USB flash drive, connect the FI-1000 video probe to the tester.

⑨ Headset jack

⑩ ✔TEST: Starts a test. To start a test, you can also tap **TEST** on the display.

⑪ ⏻: Power key

⑫ HOME: Press HOME to go to the home screen.

⑬ Connector for the AC adapter. The LED is red when the battery charges, and green when the battery is fully charged. The LED is yellow if the battery will not charge. See "Charge the Battery" on page 11.

⑭ RJ45 connector: Lets you connect to a network for access to Fluke Networks cloud services.

⑮ Decal with laser safety information.

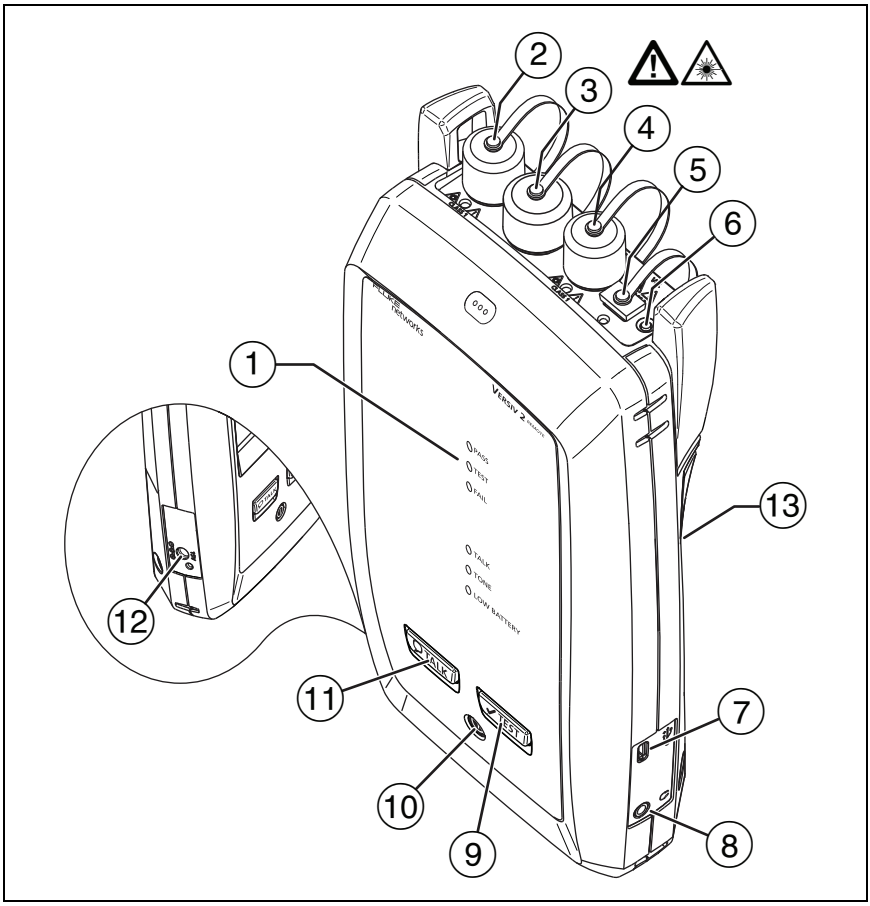

BV136.EPS

Figure 41. Remote Tester Connectors, Keys, and LEDs (CFP-QUAD module shown)

① **PASS** LED comes on when a test passes.

TEST LED comes on during a test and when you manually turn on one of the output ports (⑥).

FAIL LED comes on when a test fails.

TALK LED comes on when the talk function is on. The LED flashes until the main tester accepts the request to talk.

TONE LED flashes if you press [✔TEST] when a main tester is not connected to the remote or is in **Far End Source** mode.

LOW BATTERY LED comes on when the battery is low.

The LEDs also have these functions:

- Battery gauge (see Figure 1 on page 12)
- Volume indicator for the **TALK** function
- Progress indicator for software updates

② Singlemode output port with removable connector adapter and dust cap. This port transmits optical signals for loss and length measurements.

The LED below the output port is red when the port transmits 1310 nm and green for 1550 nm.

③ Input port with removable connector adapter and dust cap. This port receives optical signals for loss, length, and power measurements.

④ Multimode output port with removable connector adapter and dust cap. This port transmits optical signals for loss and length measurements.

The LED below the output port is red when the port transmits 850 nm and green for 1300 nm.

⑤ Universal fiber connector (with dust cap) for the visual fault locator. The connector accepts 2.5 mm ferrules. The LED below the connector shows the locator's mode.

⑥ Button to manually control the output ports (② and ④) and the visual fault locator (⑤).

⑦ Micro-AB USB port: This USB port lets you connect the tester to a PC so you can install software updates in the tester.

⑧ Headset jack

⑨ [✔TEST]: Starts a test.

⑩ [⏻]: Power key

⑪ [TALK]: Press [TALK] to use the headset to speak to the person at the other end of the link. Press again to adjust the volume. To turn off the talk function, hold down [TALK].

⑫ Connector for the AC adapter. The LED is red when the battery charges, and green when the battery is fully charged. The LED is yellow if the battery will not charge. See "Charge the Battery" on page 11.

⑬ Decal with laser safety information.

How to Remove and Install the Connector Adapters

You can change the connector adapters on the input ports of the modules to connect to SC, ST, LC, and FC fiber connectors. You can remove the adapter on the output port to clean the fiber endface in the port. See Figure 42.

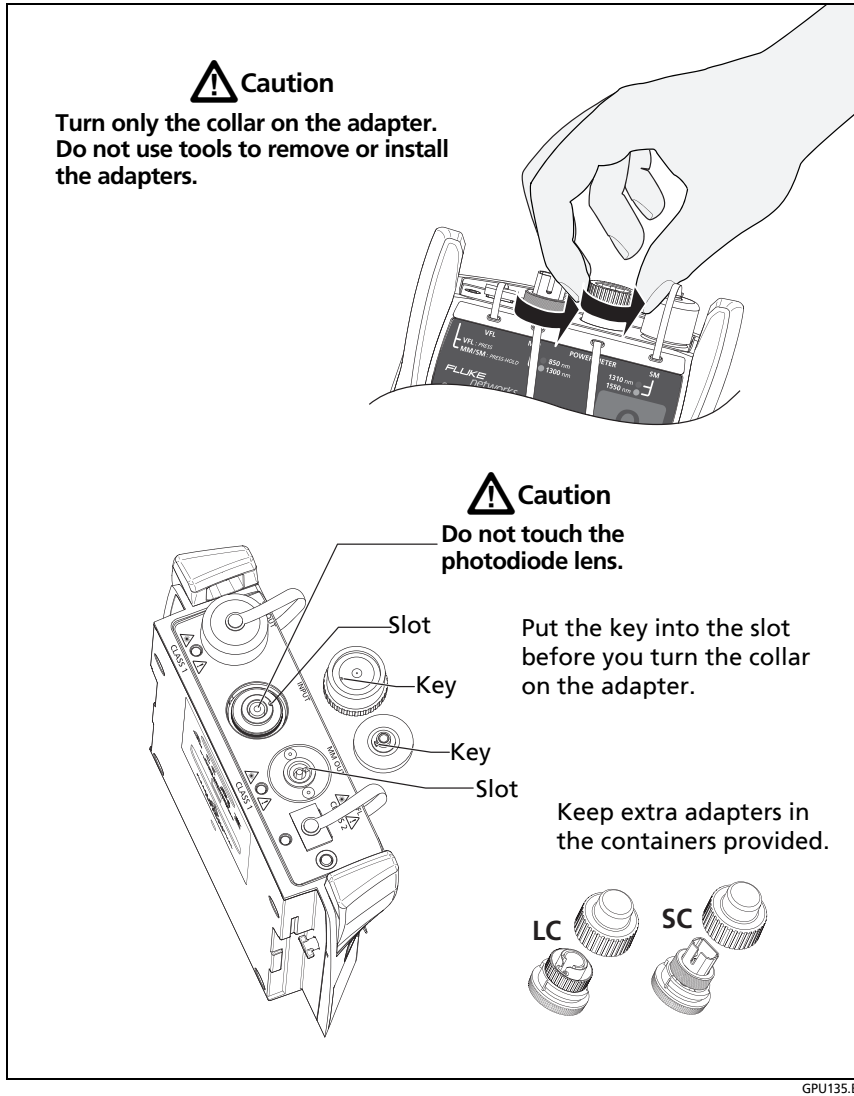

GPU135.EPS

Figure 42. How to Remove and Install the Connector Adapters

The CertiFiber Pro Home Screen

The home screen (Figure 43) shows important test settings. Before you do a test, make sure these settings are correct.

GPU117.EPS

Figure 43. The Home Screen for CertiFiber Pro Modules

(1) **PROJECT**: The project contains the settings for a job and helps you monitor the status of a job. When you save test results, the tester puts them in the project. Tap the **PROJECT** panel to edit the project settings, select a different project, or make a new project.

② Shows a summary of the test results in the project:

✔ The number of tests that passed.

✘ The number of tests that failed.

③ The test setup panel shows the settings the tester will use when you tap **TEST** or press ✔TEST.

To change these settings, tap the panel, select the test on the **CHANGE TEST** screen, tap **EDIT**, select different settings on the **TEST SETUP** screen, then tap **SAVE**. See Table 6 on pages 113 and 114.

Note

You can set up tests for any module that the tester can use, even when no module is attached.

④ **Next ID**: The **Next ID** panel shows the ID that the tester gives to the next test results you save. For **Smart Remote** mode, this panel shows IDs for main tester's input and output fibers.

Tap **Next ID** to do these tasks:

- Enter an ID, select a different ID in the ID set, select a different set of IDs, or make a new set. The tester adds the IDs and ID sets you make to the project that shows on the home screen.
- Turn **Auto Save** on or off.

⑤ **Operator**: The name of the person who does the job. You can enter a maximum of 20 operator names. For each operator you can also enter the email address that the operator will use as an ID to sign in to LinkWare Live.

⑥ **TOOLS**: The **TOOLS** menu lets you set the reference for fiber tests, see the status of the tester, and set user preferences such as the language and the display brightness.

⑦ **SET REF**: Tap **SET REF** to set the reference and verify your test reference cords for loss/length tests.

⑧ **RESULTS**: Tap **RESULTS** to see and manage the results that are saved in the tester.

⑨ **SYNC**: Tap **SYNC** to sync projects with LinkWare Live.

⑩ **TEST**: Tap **TEST** to do the test shown in the test setup panel.The percentage of the tests in the project that are completed. The tester uses the number of available IDs to calculate this percentage. See Figure 90 on page 226. **% Tested** does not show if your project contains only a **Next ID** list. See "About Next ID Sets" on page 225 for more information about the **Next ID** list.

⑪ The type of module attached to the tester.

⑫ This icon shows when the input and output ports on the tester's CertiFiber Pro module are connected to the ports on the remote's CertiFiber Pro module, the remote tester is turned on, and **Smart Remote** or **Loopback** mode is selected.

⑬ The asset management icon shows when the owner of a LinkWare Live account has enabled the asset management service on the tester. See "About the Asset Management Service" on page 238.

⑭ This icon shows when the talk function is on. To use the talk function:

1. Connect the main and remote testers together through a duplex fiber link.
2. Connect headsets to the headset jacks on the testers.
3. Press the button on one of the headset microphones or press TALK on the remote, then speak into the microphone.

Requirements for Reliable Fiber Test Results

To get reliable fiber test results and make sure your tester meets its accuracy specifications, you must use the correct procedures:

- Use proper cleaning procedures to clean all fiber connectors before every use. See Chapter 4.
- Set the reference frequently. See "About the Reference for Fiber Tests" on page 106.
- Use only test reference cords that comply with ISO/IEC 14763-3. Measure the loss of the cords frequently. See "About Test Reference Cords and Mandrels" on page 108.
- For multimode fiber, make sure you use the encircled flux test reference cords (EF-TRCs) or standard mandrels correctly. See "About the EF-TRC (Encircled-Flux Test Reference Cords)" on page 108 and "TRCs Necessary for Links with APC Connectors" on page 111.
- Keep the tester's software current. The latest software is available on the Fluke Networks website. See "Update the Software" on page 243.
- Make sure you select the correct fiber type and test limit for the job, and the index of refraction for the fiber is correct. See Table 6 on page 113.
- Make sure the battery is fully charged.
- Send the modules to a Fluke Networks service center every 12 months for factory calibration.

About the Reference for Fiber Tests

The reference procedure for fiber cable sets a baseline power level for loss measurements. If the power level that enters the fiber from the source changes, the reference and your loss measurements will be incorrect. The power level can change, for example, when the temperature at the job site increases or decreases or when you disconnect then reconnect a test reference cord at the tester's output port. So, it is important to set the reference frequently.

When to Set the Reference

Note

At the job site, turn on the testers and let them sit for a minimum of 5 minutes before you set the reference. Let them sit longer if they are above or below ambient temperature.

The tester requires you to set the reference at these times:

- When you change the CertiFiber Pro module in the main or remote tester.
- When you use a different remote tester.
- When you change the **Reference Method** in the test setup.

Set the reference also at these times:

- At the start of each day, at the job site, then at regular intervals during the day. For example, set the reference when you start tests on a different series of fibers.
- When you connect a test reference cord to the module's output port or to another source, even if you connect the same test reference cord you connected before.
- When the tester tells you that the reference is out of date.
- When a loss measurement is negative. This occurs when there was a problem when you set the reference. For example, an endface was dirty or the testers were cold.

⚠ Caution

Do not disconnect the test reference cords from the modules' output ports after you set the reference. If you do, you will change the amount of optical power that enters the fiber and the reference will not be correct.

Good Reference Values

For **Smart Remote** and **Loopback** modes, these are the typical ranges for reference values:

- Multimode 50/125 µm fiber: -19.4 dBm to -26.5 dBm
- Multimode 62.5/125 µm fiber: -17.5 dBm to -23.0 dBm
- Singlemode fiber: -1.0 dBm to -6.0 dBm

For **Far End Source** mode with a CertiFiber Pro source, reference values must be in these ranges:

- Multimode 50/125 µm fiber: -19.4 dBm to -26.5 dBm
- Multimode 62.5/125 µm fiber: -17.5 dBm to -23.0 dBm
- Singlemode fiber: -1.0 dBm to -9.7 dBm

If your reference value is outside of the applicable range given above, clean and inspect all connectors then set the reference again. Do this even if the tester lets you use the value.

If your test reference cords and connectors are in good condition, and you use the correct procedure to set the reference, the reference value will not change by more than approximately 0.4 dBm.

How to See the Reference Values

- After you set the reference, tap **View Reference** on the **SET REFERENCE** screen.
- After you do an Autotest, tap the result window for a fiber, then tap **VIEW REFERENCE**.

About Test Reference Cords and Mandrels

Use only test reference cords (TRCs) that have low loss:

- **Maximum loss for multimode TRCs:** ≤ 0.15 dB
- **Maximum loss for singlemode TRCs:** ≤ 0.25 dB

To make sure your test results are accurate as possible:

- Inspect the endfaces of the TRCs every 24 to 48 tests and clean them when necessary.
- Use the **TRC VERIFICATION** wizard available for the **1 Jumper** and **3 Jumper** reference methods to measure the losses of the TRCs. The losses of the TRCs are included in the loss measurements for links, so you must make sure the losses are very small. The wizard saves the results of the TRC tests to show that your TRCs were good. IDs for these results start with "TRC", show the date and time of the test, and have an for the test result.

About the EF-TRC (Encircled-Flux Test Reference Cords)

The CFP-MM and CFP-QUAD kits includes the EF-TRC (encircled flux test reference cords), which have signal conditioners on the cords. When you use the EF-TRCs with the CertiFiber Pro multimode modules, your tester complies with IEC 61280-4-1, ISO/IEC 14763-3, and TIA-526-14-B standards for encircled flux. Measurements made with compliant equipment change less than 10 % for losses of 1 dB or more when you make them at different times or with different equipment that is also compliant.

Note

The IEC 61280-4-1, ISO/IEC 14763-3, and TIA-526-14-B standards require your optical loss test set to comply with encircled flux standards at 850 nm with 50 µm/125 µm fiber. The standards recommend compliance at 850 nm with 62.5 µm/125 µm fiber and at 1300 nm with 50 µm/125 µm and 62.5 µm/125 µm fiber.

⚠ Caution

To prevent damage to fiber connectors, to prevent data loss, and to make sure that your test results are as accurate as possible:

- **Use the EF-TRC cords only with the CertiFiber Pro modules or with sources approved by Fluke Networks for use with the cords. If a source does not have the correct LED and internal fibers, the EF-TRC cords will not make launch conditions that agree with encircled flux standards.**
- **When you use the EF-TRCs, DO NOT use other mandrels.**
- **Always follow the handling guidelines given in Figure 44.**
- **Put protective caps on all connectors when you do not use them.**
- **Use EF-TRCs that have the fiber core dimension (50 µm or 62.5 µm) and type of connectors (SC, ST, LC, or FC) that are the same as the fiber link. Do not use EF-TRCs with hybrid patch cords to connect to links that have other types of connectors.**

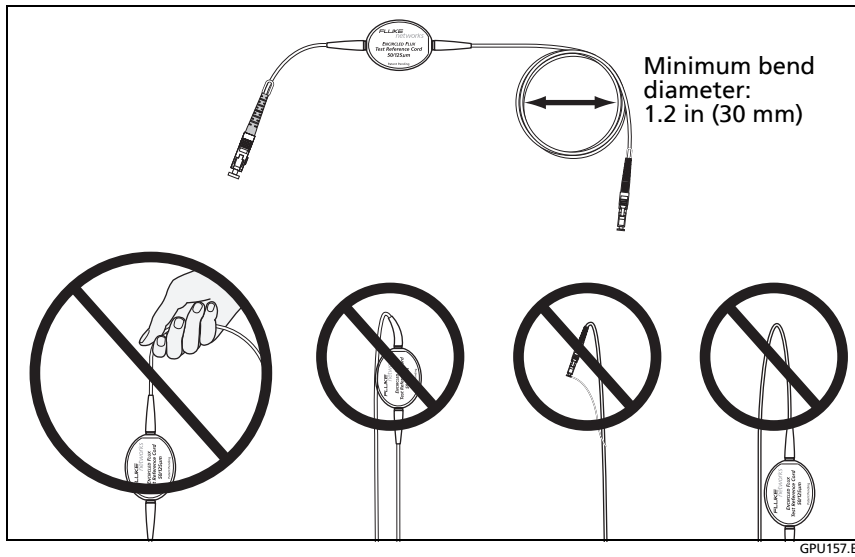

Figure 44. How to Prevent Damage to the EF-TRC Fiber Cables

About APC Connectors

When you do tests on links with APC (angled physical contact) connectors, use only test reference cords with APC connectors on the ends connected to the link. If you connect non-APC connectors to the link, the connectors will cause large reflections that make loss measurements inaccurate.

For tests on links with APC connectors, use test reference cords that also have APC connectors on the ends connected to the tester's input ports. This is necessary for the 1 jumper reference method. You can connect APC connectors to the tester's input ports because the fiber does not touch the lens on the input port.

Note

Do not connect APC connectors to the tester's output ports. APC connectors will not damage the ports, but they will not receive enough optical power from the tester because the output ports are designed for UPC connectors.

Figure 45 shows the TRCs necessary for tests on links with APC connectors.

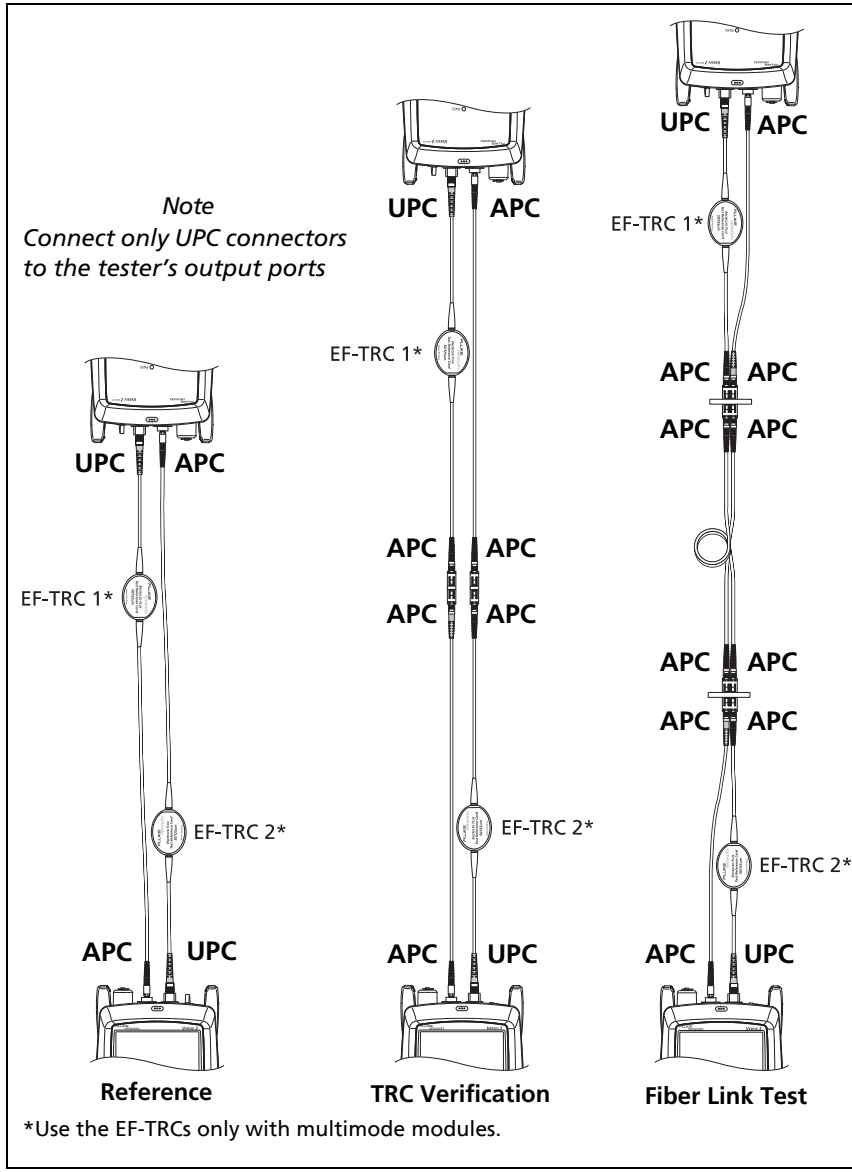

BV166.EPS

Figure 45. TRCs Necessary for Links with APC Connectors

About Standard Mandrels

Standard mandrels make measurements of multimode power loss more reliable than if you use no mandrels, but the measurements do not comply with the standards for encircled flux. Fluke Networks recommends that you always use only the EF-TRCs with the CertiFiber Pro multimode modules so that your measurements comply with EF standards.

If you must do tests in Far End Source mode with a different multimode source, and the source is not approved by Fluke Networks for use with the TRCs, use standard mandrels. Make sure you use the size of mandrel that is correct for 50 µm or 62.5 µm fiber, and read all instructions for the source and mandrel.

⚠ Caution

If you use mandrels for tests on multimode fiber, do not use test reference cords made from bend-insensitive fiber. The mandrels possibly will not remove all of the modes that can make your loss measurements unreliable.

Settings for Fiber Tests

Table 6 gives descriptions of the settings for fiber tests. To set up a project, which includes the settings in Table 6, cable IDs, and operator names, see Chapter 11.

To set up a fiber test

1. On the home screen, tap the test setup panel.
2. On the **CHANGE TEST** screen, select a fiber test to change, then tap **EDIT**.

   Or to set up a new fiber test, tap **NEW TEST**. If no module is installed, the **MODULE** screen shows. Tap the correct CertiFiber Pro module.

3 On the **TEST SETUP** screen, tap the panels to change settings for the test. See Table 6.

4 On the **TEST SETUP** screen, tap **SAVE** when your test setup is completed.

5 On the **CHANGE TEST** screen, make sure the button next to the test is selected, then tap **USE SELECTED**.

Table 6. Settings for Fiber Tests

Setting	Description
Module	Select the CertiFiber Pro module you will use.
Test Type	Use **Smart Remote** mode for tests on duplex-fiber cabling. See page 121. Use **Loopback** mode for tests on patch cords and cable spools. See page 129. Use **Far End Source** mode for tests on individual fibers. See page 137.
Bi-Directional	**Off**: The tester does fiber tests in only one direction. **On**: The tester does fiber tests in both directions. See "Bi-Directional Tests" on page 146. The **Bi-Directional** setting is not available for **Far End Source** mode.
Fiber Type	Select a fiber type that is correct for the type you will test. To see a different group of fiber types, tap **MORE**, then tap a group. To make a custom fiber type, tap **Custom** in the **Fiber Groups** list. See the Technical Reference Handbook.
Fiber Type Settings	**IOR**: The tester uses the index of refraction to calculate the optical length of the fiber. Each fiber type includes the value specified by the manufacturer. To use a different **IOR**, make a custom fiber type. See the Technical Reference Handbook.

-continued-

Table 6. Settings for Fiber Tests (continued)

Test Limit	Select the correct test limit for the job. To see a different group of limits, tap **MORE**, then tap the name of a group. To make a custom limit, tap **Custom** in the **Limit Groups** list. See the Technical Reference Handbook.
Reference Method	On the **No. of Connectors/Splices** screen, set the number of jumpers you will use in each fiber path when you set the reference. The dotted lines in the diagram on the screen show you which parts of the link are included in the test results. The number of jumpers you use has these effects on loss measurements: **1 Jumper**: Loss measurements include the connections at both ends of the link. The figures in this manual show **1 Jumper** connections. **2 Jumper**: Loss measurements include one connection at one end of the link. **3 Jumper**: Loss measurements do not include the connections at the ends of the link. The tester measures only the loss of the fiber. This setting does not change the loss measurements, but it can change the **PASS/FAIL** result for test limits that use a calculated loss limit. For all test limits, the tester saves this setting to show the reference method you used. **Caution** **Most cable manufacturers will give you a warranty on a fiber installation only if you use the 1 Jumper reference method when you certify the installation.** *Note* *Different standards use different names for the three methods. See Appendix A.*

Table 6. Settings for Fiber Tests (continued)

Connector Type	Select the type of connector, such as SC or LC, used in the cabling. The tester uses this setting when you do bi-directional tests. If you select a connector that has a threaded or bayonet coupler, such as FC or ST, the tester waits for you to confirm that the connection is complete before it starts the second part of the test. If you select a quick-release connector, such as SC or LC, the tester automatically starts the test when you connect the fiber. The tester also saves this setting to record the type of connector you used. This setting does not change your test results or any of the diagrams that the tester shows. If the correct type is not in the list, select **General**.

Table 6. Settings for Fiber Tests (continued)

No. of Connectors/ Splices	The **Total Connections** and **Splices** settings are applicable only if the selected test limit uses a calculated limit for loss. **Total Connections**: Enter the total number of connections that are in each path of the link. Do not adjust the number for the **Reference Method** you use. For example, if the link has 3 connections, enter "3" even if you use the **2** or **3 Jumper** reference method. When the tester calculates the loss limit, it automatically removes the losses of the connections you used to set the reference. *Note* *The CertiFiber Pro automatically adjusts the number of connections for the **Reference Method** you use. This is different from the DTX CableAnalyzer, where you do not include the reference connections in the number of connectors.* **Splices**: Enter the number of splices in each path of the link. **Jumper Reference**: Enter the number of jumpers you will use in each fiber path when you set the reference. The dotted lines in the diagram on the screen show you which parts of the link are included in the test results. See **Reference Method** above. Figure 46 shows the **No. of Connectors/Splices** screen. Figure 47 shows how to count the jumpers, connectors, and splices for this setting.
TRC LENGTH (Test reference cord length)	You can enter length of your test reference cords when you set the reference. To enter this value, tap **TRC LENGTH** on the **SET REFERENCE** screen. The length you enter does not change the test results. The tester saves the length with the results to meet TIA reporting requirements.

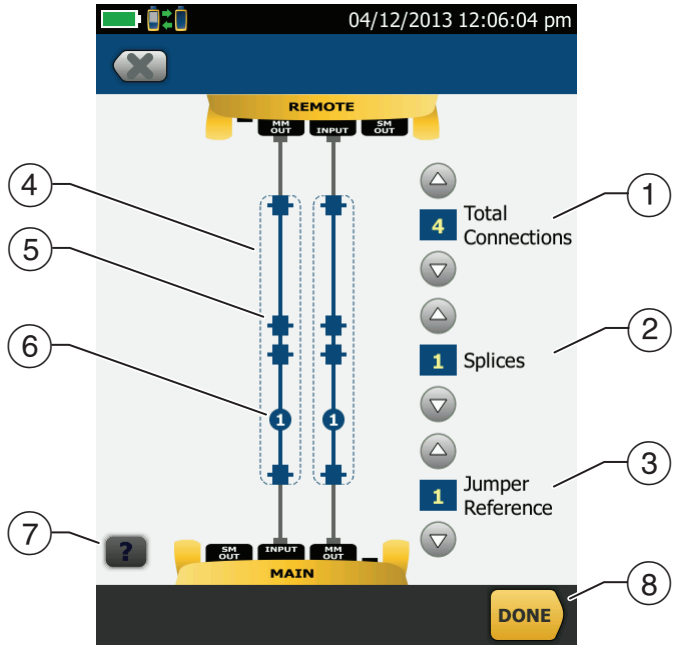

GPU140.EPS

Figure 46. Screen to Set the Number of Connectors, Splices, and Jumpers

(1) **Total Connections**: Enter the total number of connections that are in each path of the link. Do not adjust the number for the **Reference Method** you use. For example, if the link has 3 connections, enter "3" even if you use the **2** or **3 Jumper** reference method. When the tester calculates the loss limit, it automatically removes the losses of the connections you used to set the reference.

Note

For links with MPO modules, each module is one connector.

② **Splices**: Enter the number of splices that are in each path of the link.

③ **Jumper Reference**: Enter the number of jumpers you will use in each fiber path when you set the reference. The dotted lines in the diagram on the screen show you which parts of the link are included in the test results. See **Reference Method** on page 114.

④ The dotted lines show you which parts of the link are included in the test results.

⑤ Connector icons show the connections between the ends of the link. If you enter 7 or more for the **Total Connections** setting, a number inside of a connector icon shows the number of connectors between the ends of the link. For example, if the **Total Connections** setting is 7, a connector icon shows the number 5 (5)

⑥ The round icon shows the number of splices in each path of the link.

⑦ To see help for the screen, tap ?.

⑧ To save your settings, tap **DONE**.

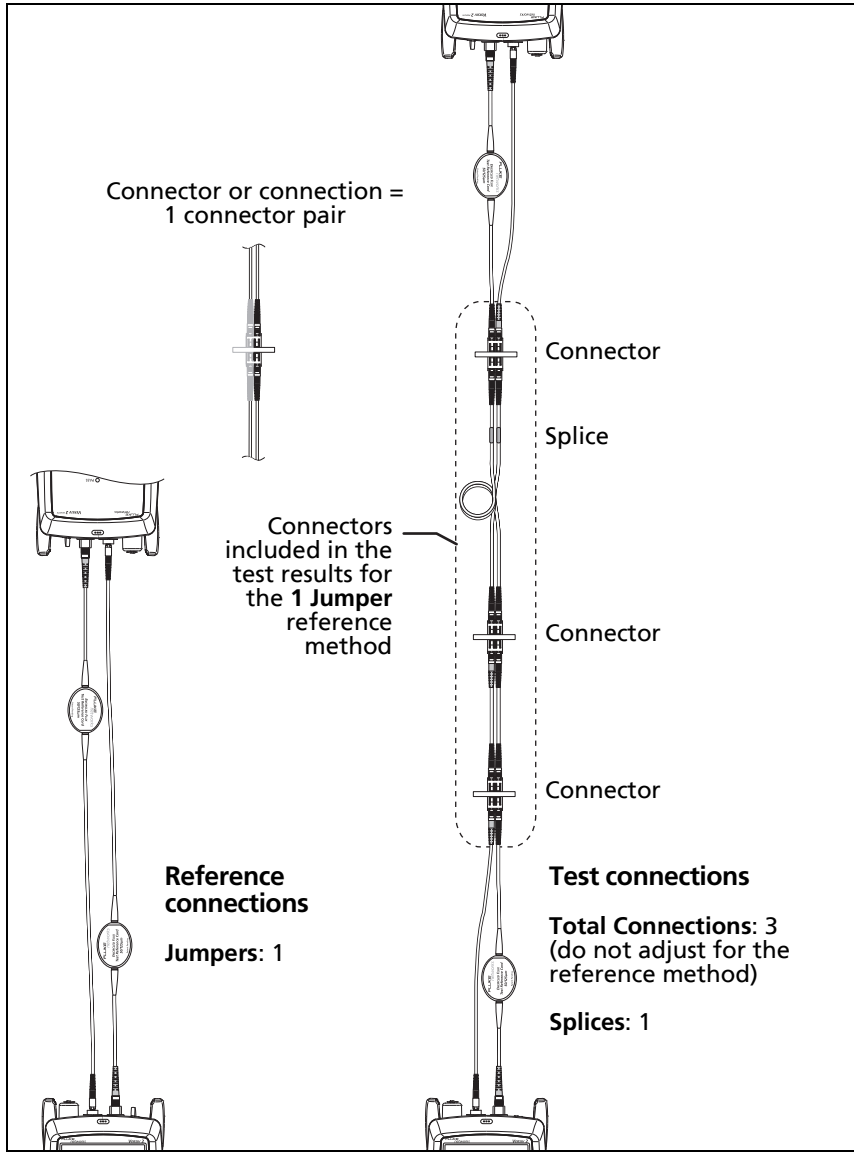

BV133.EPS

Figure 47. How to Count the Numbers of Connectors, Splices, and Jumpers

About 1 Jumper Reference Connections

The reference and test connections shown in this manual give 1 jumper results. 1 jumper results include the loss of the fiber plus the loss of the connections at both ends of the link. This is the best method for tests on premises fiber installations. Premises installations typically use patch cords at both ends of the link, and connector loss is a large part of the total loss.

If you do not have the correct connector adapters, see Appendix B for other connections that give 1 jumper results.

For descriptions of the 2 and 3 jumper reference connections, see the *Versiv 2 Technical Reference Handbook*.

Caution

Most cable manufacturers will give you a warranty on a fiber installation only if you use a 1 Jumper reference when you certify the installation.

Note

*If you use a **2 Jumper** reference, the Wizard for the reference procedure does not show steps for the TRC verification. To save test results for the TRCs, do the tests manually.*

Autotest in Smart Remote Mode

Use **Smart Remote** mode to do tests on dual-fiber cabling.

In this mode, the tester measures loss and length on two fibers at two wavelengths. If you turn on the **Bi-Directional** function and swap the fibers halfway through the test, the tester makes measurements in both directions.

Figure 48 shows the equipment for tests in **Smart Remote** mode.

Fiber Tests with Two Main Testers

If you have two main testers, you can use one as a remote tester for tests in Smart Remote mode. This also lets you use FiberInspector video probes at both ends of the cabling for faster inspections of fiber endfaces.

To use a main tester as a remote

Tap **TOOLS** then tap **Main as Remote**.

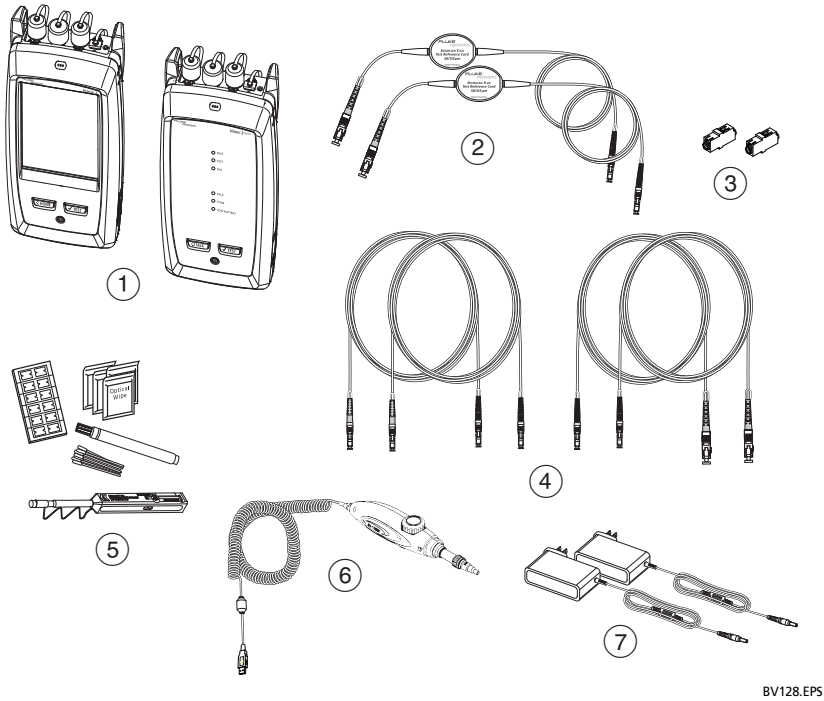

1. Main and remote Versiv 2 units with CertiFiber Pro modules installed
2. For multimode fiber: two EF-TRC test reference cords
3. Two singlemode adapters
4. For multimode fiber: two test reference cords. For singlemode fiber: four test reference cords.
5. Fiber cleaning supplies
6. FI-1000 video probe with USB connector
7. AC adapters (optional)

Figure 48. Equipment for Autotests in Smart Remote Mode

Step 1: Set the Reference in Smart Remote Mode

1-1 Turn on the tester and remote and let them sit for a minimum of 5 minutes. Let them sit longer if they are above or below ambient temperature.

1-2 Make sure that the home screen shows the correct settings for the job, and the test type is **Smart Remote**.

To make sure that other settings are correct, tap the test setup panel, make sure the correct test is selected on the **CHANGE TEST** screen, then tap **EDIT** to see more settings. Table 6 on page 113 describes the settings.

1-3 Clean and inspect the connectors on the tester, remote, and test reference cords.

1-4 On the home screen tap **SET REF**.

1-5 On the **SET REFERENCE** screen, tap **RUN WIZARD**.

Notes

*To only set the reference, and not measure the loss of your test reference cords, tap **SKIP WIZARD** on the **SET REFERENCE** screen.*

Fluke Networks recommends that you measure the loss of your test reference cords each time you set the reference.

1-6 Make the connections to set the reference, as shown on the screen and in Figure 49, then tap **NEXT** to see the completed connections.

Notes

*The **SET REFERENCE** screen shows reference connections for the selected reference method. Figure 49 shows connections for a **1 Jumper** reference.*

When you set the reference, align the testers as shown in Figure 49 to keep the fibers as straight as possible.

-continued-

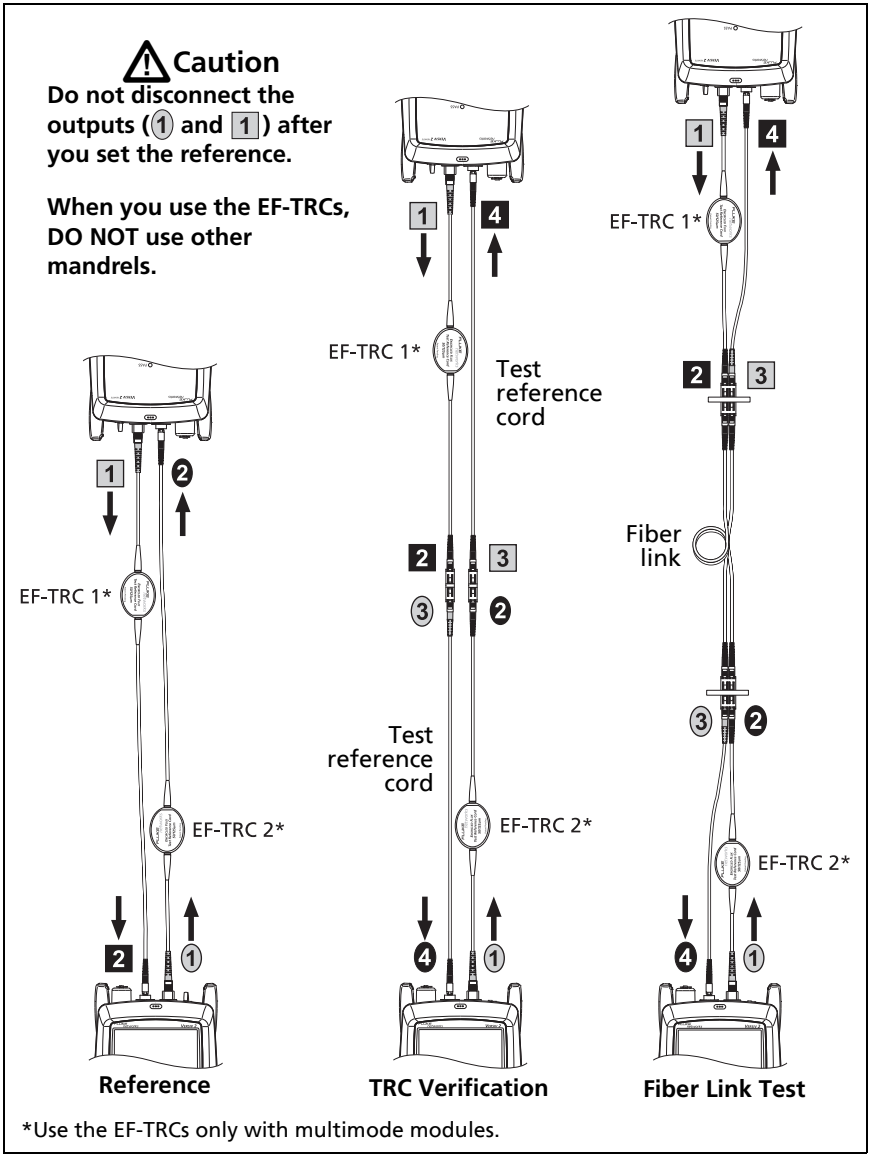

BV122.EPS

Figure 49. Connections for Smart Remote Mode (1 Jumper Reference, Multimode Fiber)

1-7 To enter the length of the test reference cords you will add to connect to the link, tap **TRC LENGTH** on the **SET REFERENCE** screen. The length you enter does not change the test results. The tester saves the length with the results to meet TIA reporting requirements.

1-8 Tap **SET REFERENCE**.

If reference values are unacceptable, you can use the FiberInspector probe to inspect connectors. To turn on the probe, press the button on the probe. To go back to the reference screen, tap .

1-9 If you did not use the connection wizard, go to step 3.

Step 2: Measure the Loss of the Test Reference Cord You Will Add

Caution

If you disconnected a test reference cord from the output of the tester or remote, you must set the reference again to make sure your measurements are reliable.

2-1 On the **SET REFERENCE** screen, when the reference procedure is completed, tap **NEXT**.

2-2 Disconnect the test reference cords from the INPUT ports on the tester and remote, then use test reference cords and adapters to make the connections to verify the TRCs, as shown on the screen and in Figure 49.

2-3 Tap **TRC VERIFICATION**. The tester measures and saves the loss of the test reference cords you added. The IDs for these results start with "TRC", show the date and time of the test, and have an for the test result.

The tester shows a warning if the loss of a TRC is more than these limits:

- **Maximum loss for multimode TRCs**: 0.15 dB
- **Maximum loss for singlemode TRCs**: 0.25 dB

If the tester shows a warning, clean and inspect the connectors on the TRCs in the path that has too much loss, make sure the cords are straight as shown in Figure 49, then do the TRC verification again.

Step 3: Do an Autotest in Smart Remote Mode

Caution

If you disconnected a test reference cord from the output of the tester or remote, you must set the reference again to make sure your measurements are reliable.

3-1 On the **SET REFERENCE** screen, when the set reference or TRC verification procedure is completed, tap **NEXT** to see how to connect to the link under test.

3-2 Clean and inspect all the connectors.

3-3 Make the connections to do the test on the fiber link, as shown on the screen and in Figure 49, then tap **HOME**.

3-4 Tap **TEST** on the main tester or press ✔TEST on the main or remote tester.

If the **CHECK FIBER CONNECTIONS** screen shows an open fiber:

- Make sure that all connections are good and no fibers have damage. Use the VFL to make sure the fibers in the link have continuity.
- Make sure that the remote is on.
- Switch the connections at one end of the patch panel.

- If you are not sure you are connected to the correct fibers, connect the main tester's INPUT fiber to different connections until the test continues or the INPUT fiber on the display is green. Then if necessary, connect the remote's INPUT fiber to different connections until the test continues.

3-5 If **Bi-Directional** is **On**: Halfway through the test, the tester tells you to switch the input and output fibers. See "Bi-Directional Tests" on page 146.

3-6 Save the result:

- If **Auto Save** is on, the tester uses the next two IDs to save the results for the two fibers.
- If **Auto Save** is off, tap **SAVE** if the test passed or **FIX LATER** if the test failed. The **SAVE RESULT** screen shows the next two IDs available. You can change the IDs if necessary.

Autotest Results for Smart Remote Mode

Unsaved results show the results for both fibers. See Figure 50.

① The overall result for the Autotest.

② The fiber IDs and the loss and length measurements for the fibers:

✗ The result exceeds the limit.

✓ The result is within the limit.

ℹ The selected test limit does not have a limit for the test.

To see the results, limits, and margins for a fiber, tap the window.

③ The settings the tester used for the test.

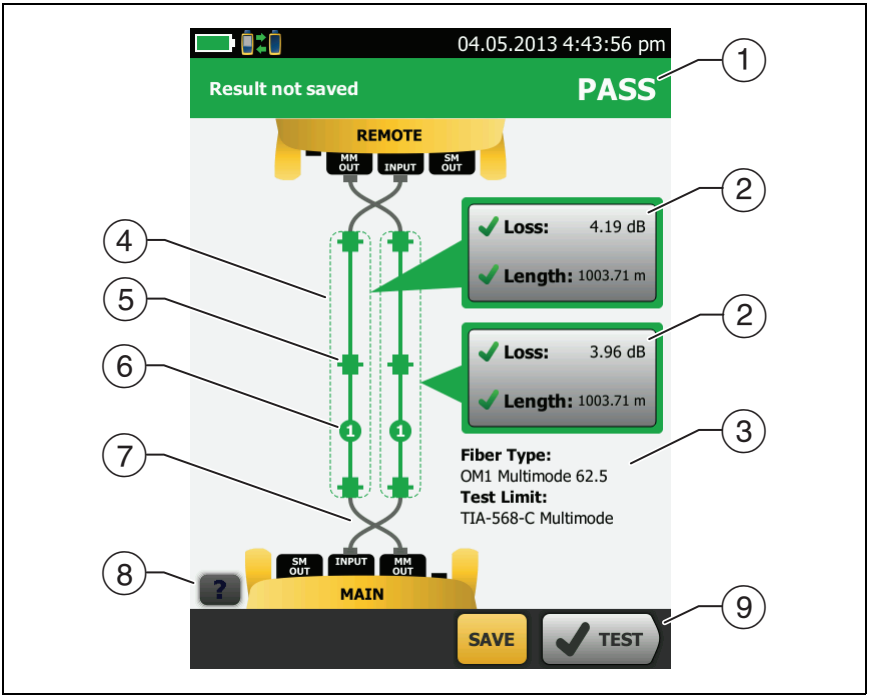

GPU118.EPS

Figure 50. Result for Smart Remote Mode (Unsaved Bi-Directional Results Shown)

Note

The length shown for each fiber is half of the total length of both fibers.

(4) The dashed lines are around the connectors and fiber that are included in the loss and length results. Gray connectors and fibers are not included because you used them to set the reference.

(5) Connector icons show the number you entered for the **TOTAL CONNECTIONS** setting on the **No. of Connectors/Splices** screen (Figure 46 on page 117). For Figure 50, the **TOTAL CONNECTIONS** setting is 4.

⑥ The round icon shows the number of splices entered for the **SPLICES** setting on the **No. of Connectors/Splices** screen.

⑦ Bi-directional results show the fibers crossed at the main and remote ports. The fibers show the connections as they are at the end of the test.

⑧ To see help for the screen, tap ?.

⑨ When more than one button shows at the bottom of the screen, the tester highlights one in yellow to recommend which one to tap. See "Buttons to Do Tests and Save Results" on page 17.

Fiber IDs for Saved Results in Smart Remote Mode

If **Auto Save** is **On** and the test passed, the tester saves two records, one for each fiber. The records have the next two IDs in the ID list.

If you must change the ID for a fiber before you save results, set **Auto Save** to **Off** before you do the test. Then, on the **SAVE RESULT** screen, tap the **Input Fiber ID** or **Output Fiber ID** window.

Autotest in Loopback Mode

Use **Loopback** mode to do tests on spools of cable and segments of uninstalled cable.

In this mode, the tester measures loss and length at two wavelengths. If you turn on the **Bi-Directional** function and swap the fibers halfway through the test, the tester makes measurements in both directions.

Figure 48 shows the equipment for tests in Loopback Mode.

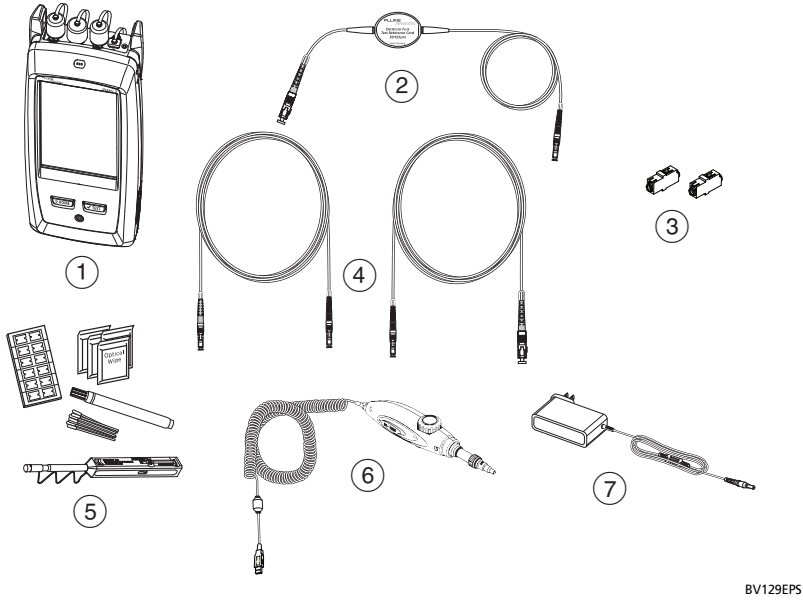

1. Main Versiv 2 unit with CertiFiber Pro module installed
2. For multimode fiber: one EF-TRC test reference cord
3. Two singlemode adapters
4. For multimode fiber: one test reference cord. For singlemode fiber: two test reference cords.
5. Fiber cleaning supplies
6. FI-1000 video probe with USB connector
7. AC adapter (optional)

Figure 51. Equipment for Autotests in Loopback Mode

Step 1: Set the Reference in Loopback Mode

1-1 Turn on the tester and let it sit for a minimum of 5 minutes. Let it sit longer if it is above or below ambient temperature.

1-2 Make sure that the home screen shows the correct settings for the job, and the test type is **Loopback**.

To make sure that other settings are correct, tap the test setup panel, make sure the correct test is selected on the **CHANGE TEST** screen, then tap **EDIT** to see more settings. Table 6 on page 113 describes the settings.

1-3 Clean and inspect the connectors on the tester and test reference cords.

1-4 On the home screen tap **SET REF**.

1-5 On the **SET REFERENCE** screen, tap **RUN WIZARD**.

Notes

*To only set the reference, and not measure the loss of your test reference cord, tap **SKIP WIZARD** on the **SET REFERENCE** screen.*

Fluke Networks recommends that you measure the loss of your test reference cord each time you set the reference.

1-6 Make the connection to set the reference, as shown on the screen, then tap **NEXT** to see the completed connections. Figure 52 also shows the completed connections.

Notes

*The **SET REFERENCE** screen shows reference connections for the selected reference method. Figure 52 shows connections for the **1 Jumper** reference.*

When you set the reference, keep the fiber as straight as possible.

-continued-

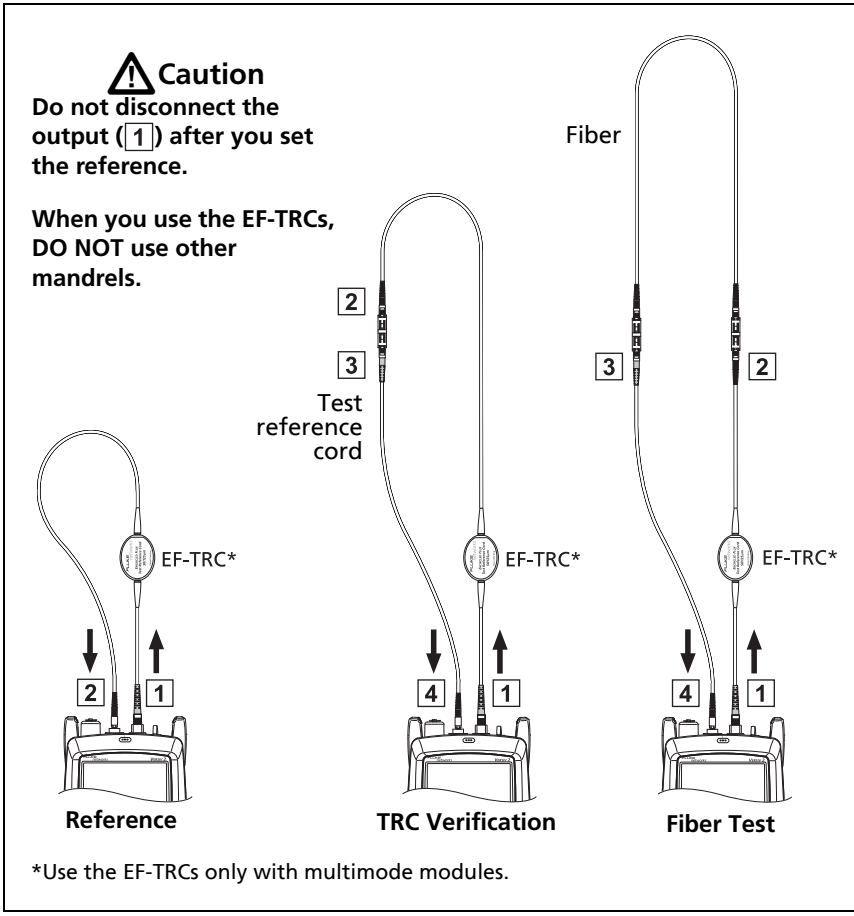

BV131.EPS

Figure 52. Connections for Loopback Mode (1 Jumper Reference, Multimode Fiber)

1-7 To enter the length of the test reference cord you will add to connect to the fiber under test, tap **TRC LENGTH** on the **SET REFERENCE** screen. The length you enter does not change the test results. The tester saves the length with the results to meet TIA reporting requirements.

1-8 Tap **SET REFERENCE**.

If reference values are unacceptable, you can use the FiberInspector probe to inspect connectors. To turn on the probe, press the button on the probe. To go back to the reference screen, tap .

1-9 If you did not use the connection wizard, go to step 3.

Step 2: Measure the Loss of the Test Reference Cord You Will Add

Caution

If you disconnected the test reference cord from the output of the tester, you must set the reference again to make sure your measurements are reliable.

2-1 On the **SET REFERENCE** screen, when the reference procedure is completed, tap **NEXT**.

2-2 Disconnect the test reference cord from the INPUT port on the tester, then use a test reference cord and adapter to make the connections to verify the TRCs, as shown on the screen and in Figure 52.

2-3 Tap **TRC VERIFICATION**. The tester measures and saves the loss of the test reference cord you added. The ID for this result starts with "TRC", shows the date and time of the test, and has an for the test result.

The tester shows a warning if the loss of a TRC is more than these limits:

- **Maximum loss for multimode TRCs**: 0.15 dB
- **Maximum loss for singlemode TRCs**: 0.25 dB

If the tester shows a warning, clean and inspect the connectors on the TRC, make sure the cords do not have tight bends, as shown in Figure 52, then do the TRC verification again.

Step 3: Do an Autotest in Loopback Mode

Caution

If you disconnected the test reference cord from the output of the tester, you must set the reference again to make sure your measurements are reliable.

3-1 On the **SET REFERENCE** screen, when the set reference or TRC verification procedure is completed, tap **NEXT** to see how to connect to the fiber under test.

3-2 Clean and inspect the connectors on the fiber under test.

3-3 Make the connections to do the test on the fiber, as shown on the screen and in Figure 52, then tap **HOME**.

3-4 Tap **TEST** on the main tester or press ✔TEST on the main or remote tester.

If the **CHECK FIBER CONNECTIONS** screen shows an open fiber:

- Make sure that all connections are good and no fibers have damage. Use the VFL to make sure the fiber under test has continuity.
- If you are connected to fibers at a patch panel that are connected together at the far end, and you are not sure you are connected to the correct fibers, connect the main tester's INPUT fiber to different connections until the test continues.

3-5 If **Bi-Directional** is **On**: Halfway through the test, the tester tells you to switch the input and output fibers. See "Bi-Directional Tests" on page 146.

-continued-

3-6 If **Auto Save** is on, the tester uses the next ID to save the results.

If **Auto Save** is off, the **SAVE RESULT** screen shows the next ID available. You can change the ID if necessary.

Autotest Results for Loopback Mode

Figure 53 shows an example of Autotest results for Loopback mode.

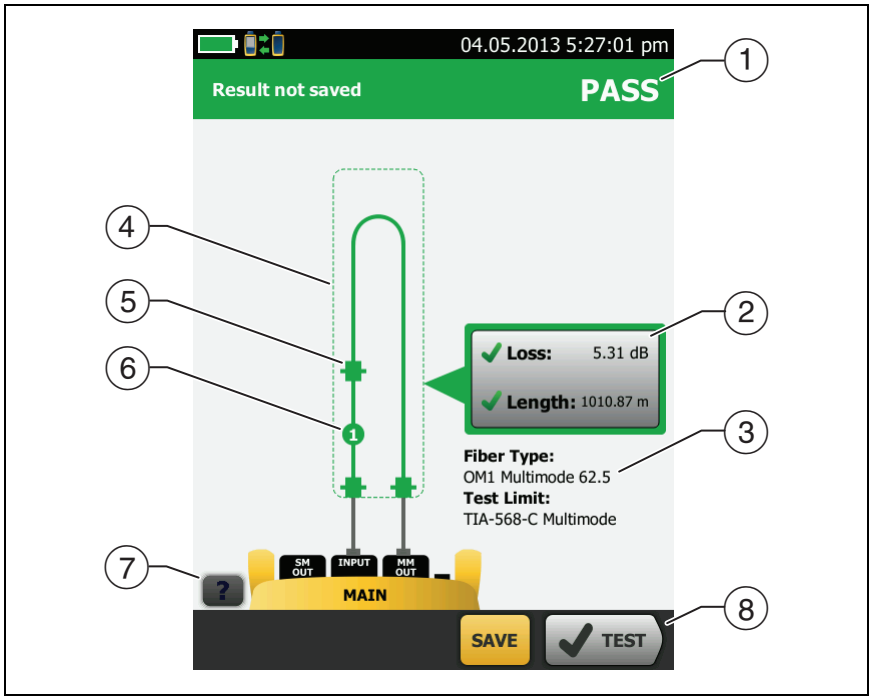

GPU119.EPS

Figure 53. Result for Loopback Mode

① The overall result for the Autotest.

② The loss and length measurements for the fiber:

The result exceeds the limit.

The result is within the limit.

The selected test limit does not have a limit for the test.

To see the results, limits, and margins for the fiber, tap the window.

3. The settings the tester used for the test.
4. The dashed lines are around the connectors and fiber that are included in the loss and length results. Gray connectors and fibers are not included because you used them to set the reference.
5. Connector icons show the number you entered for the **TOTAL CONNECTIONS** setting on the **No. of Connectors/Splices** screen (Figure 46 on page 117). For Figure 53, the **TOTAL CONNECTIONS** setting is 3.
6. The round icon shows the number of splices entered for the **SPLICES** setting on the **No. of Connectors/Splices** screen.
7. To see help for the screen, tap ?.
8. When more than one button shows at the bottom of the screen, the tester highlights one in yellow to recommend which one to tap. See “Buttons to Do Tests and Save Results” on page 17.

Autotest in Far End Source Mode

Use **Far End Source** mode to measure loss at two wavelengths on one fiber.

In this mode, you can use the CertiFiber Pro remote or another source, such as the Fluke Networks SimpliFiber® Pro source, at the far end of the fiber.

⚠ Caution

For Far End Source mode, use the EF-TRC cords only with the CertiFiber Pro modules or with sources approved by Fluke Networks for use with the cords. If a source does not have the correct LED and internal fibers, the EF-TRC cords will not make launch conditions that comply with encircled flux standards. If the source is not approved, use a standard mandrel.

Figure 54 shows the equipment for tests in Far End Source mode.

Auto Wavelength Modes

CertiFiber Pro modules and SimpliFiber Pro sources have an auto wavelength mode. In this mode, the output port transmits both wavelengths (850 nm and 1300 nm or 1310 nm and 1550 nm). The signal includes identifiers that tell the meter when to measure power at each wavelength. The CertiFiber Pro module in the remote always operates in auto wavelength mode.

To select **Auto CertiFiber Pro** or **Auto SimpliFiber Pro** mode, you tap the setting when the tester shows the **TEST MODE** window. The **TEST MODE** window shows each time you set the reference.

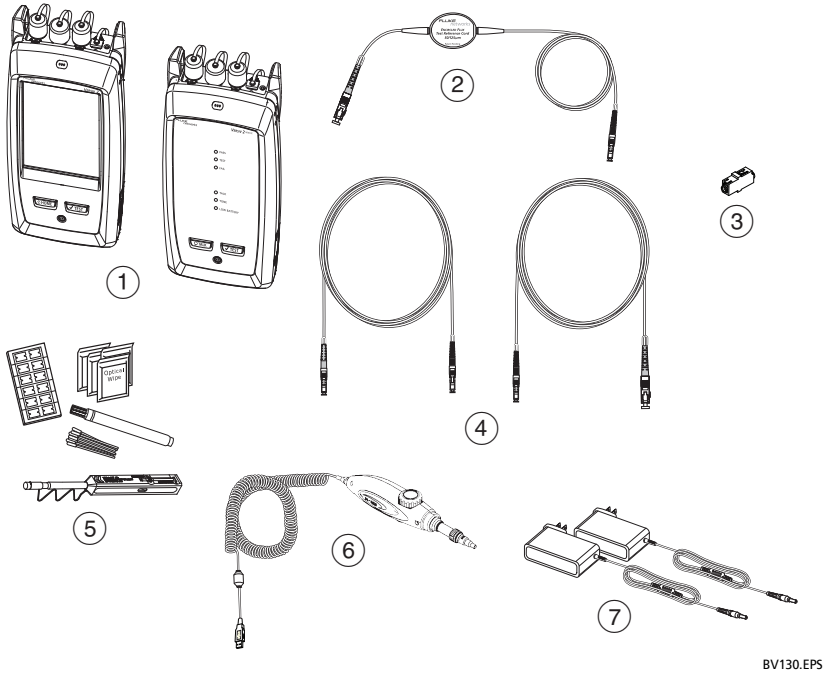

1. Main and remote Versiv 2 units with CertiFiber Pro modules installed
2. For multimode fiber: one EF-TRC test reference cord
3. One singlemode adapter
4. For multimode fiber: one test reference cord. For singlemode fiber: two test reference cords.
5. Fiber cleaning supplies
6. FI-1000 video probe with USB connector
7. AC adapters (optional)

Figure 54. Equipment for Autotests in Far End Source Mode

Step 1: Set the Reference in Far End Source Mode

1-1 Turn on the tester and source let them sit for a minimum of 5 minutes. Let them sit longer if they are above or below ambient temperature, or if the instructions for the source specify a longer time.

1-2 Make sure that the home screen shows the correct settings for the job, and the test type is **Far End Source**.

To make sure that other settings are correct, tap the test setup panel, make sure the correct test is selected on the **CHANGE TEST** screen, then tap **EDIT** to see more settings. Table 6 on page 113 describes the settings.

1-3 Clean and inspect the connectors on the tester, source, and test reference cords.

1-4 On the home screen tap **SET REF**.

1-5 In the **TEST MODE** window, select **Auto CertiFiber Pro** or the type of source you will use, then tap **DONE**.

1-6 On the **SET REFERENCE** screen, tap **RUN WIZARD**.

Notes

*To only set the reference, and not measure the loss of your test reference cord, tap **SKIP WIZARD** on the **SET REFERENCE** screen.*

Fluke Networks recommends that you measure the loss of your test reference cord each time you set the reference.

1-7 Make the connections to set the reference as shown on the screen, then tap **NEXT** to see the completed connections. Figure 55 also shows the completed connections.

Note

*The **SET REFERENCE** screen shows reference connections for the selected reference method. Figure 55 shows connections for the **1 Jumper** reference.*

Note

When you set the reference, keep the fiber as straight as possible.

1-8 Turn on the optical source. On the CertiFiber Pro remote module, hold down the button adjacent to the VFL port for 3 seconds to turn on the multimode source. See Figure 56.

On CFP-QUAD modules, to turn on the singlemode source, press the button again.

Note

The CertiFiber Pro module in the remote always operates in auto wavelength mode. The output port transmits both wavelengths (850 nm and 1300 nm or 1310 nm and 1550 nm). The signal includes identifiers that tell the main tester when to measure power at each wavelength.

1-9 To enter the length of the test reference cord you will add to connect to the fiber under test, tap **TRC LENGTH** on the **SET REFERENCE** screen. The length you enter does not change the test results. The tester saves the length with the results to meet TIA reporting requirements.

1-10 Tap **SET REFERENCE**.

If reference values are unacceptable, you can use the FiberInspector probe to inspect connectors. To turn on the probe, press the button on the probe. To go back to the reference screen, tap .

1-11 If you did not use the connection wizard, go to step 3.

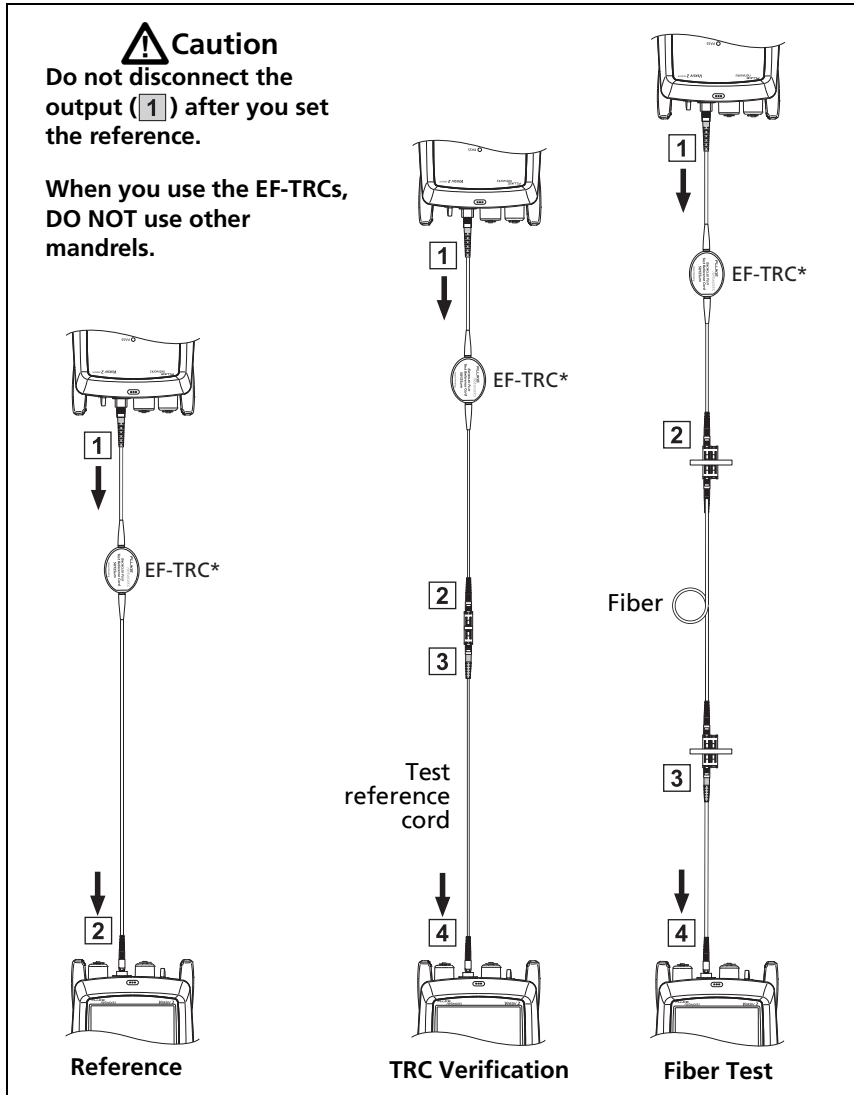

BV132.EPS

Figure 55. Connections for Far End Source Mode (1 Jumper Reference Multimode Fiber)

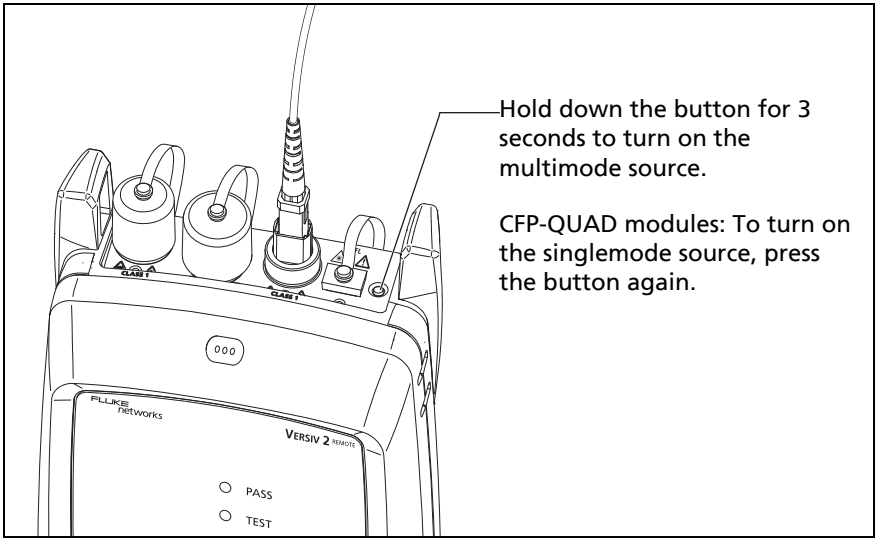

BV198.EPS

Figure 56. How to Turn on the Remote's Optical Source

Step 2: Measure the Loss of the Test Reference Cord You Will Add

⚠ Caution

If you disconnected the test reference cord from the output of the tester, you must set the reference again to make sure your measurements are reliable.

2-1 On the **SET REFERENCE** screen, when the reference procedure is completed, tap **NEXT**.

2-2 Disconnect the test reference cord from the INPUT port on the tester, then use a test reference cord and adapter to make the connections to verify the TRCs, as shown on the screen and in Figure 55.

-continued-

2-3 Tap **TRC VERIFICATION**. The tester measures and saves the loss of the test reference cord you added. The ID for this result starts with "TRC", shows the date and time of the test, and has an ℹ for the test result.

The tester shows a warning if the loss of a TRC is more than these limits:

- **Maximum loss for multimode TRCs**: 0.15 dB
- **Maximum loss for singlemode TRCs**: 0.25 dB

If the tester shows a warning, clean and inspect the connectors on the TRC, make sure the cords are straight as shown in Figure 55, then do the TRC verification again.

Step 3: Do an Autotest in Far End Source Mode

⚠ Caution

If you disconnected the test reference cord from the output of the tester, you must set the reference again to make sure your measurements are reliable.

3-1 On the **SET REFERENCE**, when the set reference or TRC verification procedure is completed, tap **NEXT** to see how to connect to the fiber under test.

3-2 Clean and inspect the all connectors.

3-3 Make the connections to do the test on the fiber, as shown on the screen and in Figure 55, then tap **HOME**.

3-4 If necessary, select **End 1** or **End 2**: On the home screen, tap the **Next ID:** panel, then tap the **End 1/End 2** control to select an end.

3-5 Tap **TEST** on the main tester or press ✔TEST on the main or remote tester.

3-6 If the **CHECK FIBER CONNECTIONS** screen shows an open fiber:

- Make sure that all connections are good and no fibers have damage. Use the VFL to make sure the fiber under test has continuity.
- If you are connected to a fiber at a patch panel, and you are not sure you are connected to the correct fiber, connect the main tester's INPUT fiber to different connections until the test continues.

3-7 If **Auto Save** is on, the tester uses the next ID to save the results.

If **Auto Save** is off, the **SAVE RESULT** screen shows the next ID available. You can change the ID if necessary.

Note

*To put **End 1**/**End 2** results together in the same record, use LinkWare software to merge the results.*

Autotest Results for Far End Source Mode

Figure 57 shows an example of Autotest results for Far End Source mode.

Note

The Autotest in Far End Source mode does not show a PASS/FAIL result, limit, or margin if the selected test limit uses fiber length to calculate loss. An example of such a limit is the TIA-568C Fiber Backbone limit. The tester does not measure length in Far End Source mode.

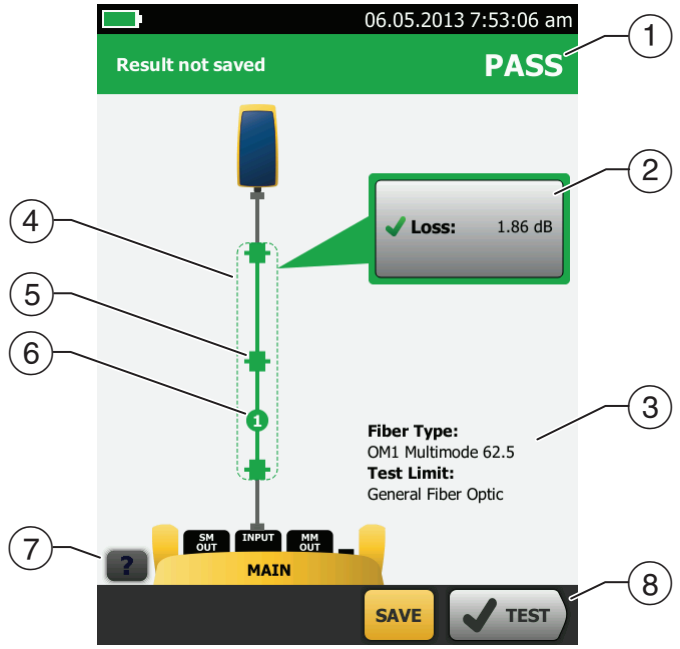

GPU120.EPS

Figure 57. Result for Far End Source Mode

① The overall result for the Autotest.

② The loss and length measurements for the fiber:

The result exceeds the limit.

The result is within the limit.

The selected test limit does not have a limit for the test.

To see the results, limit, and margins for the fiber, tap the window.

③ The settings the tester used for the test.

④ The dashed lines are around the connectors and fiber that are included in the loss and length results. Gray connectors and fibers are not included because you used them to set the reference.

⑤ Connector icons show the number you entered for the **TOTAL CONNECTIONS** setting on the **No. of Connectors/Splices** screen (Figure 46 on page 117). For Figure 57, the **TOTAL CONNECTIONS** setting is 1.

⑥ The round icon shows the number of splices entered for the **SPLICES** setting on the **No. of Connectors/Splices** screen.

⑦ To see help for the screen, tap ?.

⑧ When more than one button shows at the bottom of the screen, the tester highlights one in yellow to recommend which one to tap. See "Buttons to Do Tests and Save Results" on page 17.

Bi-Directional Tests

Do bi-directional tests when they are required by the manufacturer or by your customer.

The tester can automatically do bi-directional tests in Smart Remote and Loopback modes. To get bi-directional results in Far End Source mode, do a test from each end of the fiber.

In Smart Remote mode, the tester saves bi-directional results in two records. Each record contains the results for one fiber for both directions.

To do a bi-directional test

1. On the home screen, tap the test setup panel, make sure the correct test is selected on the **CHANGE TEST** screen, then tap **EDIT**.
2. On the **TEST SETUP** screen, in the **Bi-Directional** panel, tap the control to make it show **On**, then tap **SAVE**.
3. Do an Autotest.

-continued-

4 Halfway through the test, the tester tells you to switch the input and output fibers.

⚠ Caution

Switch the connections at both ends of the patch panel or fiber under test, not at the tester's and remote's ports. If you disconnect a test reference cord from an output port on the tester or remote, the reference value will be unreliable.

Note

*The directions **Main>Remote** (main to remote) and **Remote>Main** (remote to main) in the bi-directional results are only the directions of the optical signals for the second half of the test. If a fiber fails, the direction does not tell you the location of the problem.*

5 If **Auto Save** is on and the tester is in Smart Remote mode, the tester uses the next two IDs to save the results for the two fibers.

If **Auto Save** is off, and you tap **SAVE** or **FIX LATER,** the **SAVE RESULT** screen shows the next two IDs available. You can change the IDs if necessary.

Chapter 7: Use the OTDR

Warning

Before you use the tester, read the safety information that starts on page 5.

Overview of Features

The OptiFiber® Pro Optical Time Domain Reflectometer (OTDR) module attaches to a Versiv™ 2 main unit to make a rugged, hand-held tester that lets you locate, identify, and measure reflective and loss events in multimode and singlemode fibers. Typical maximum test ranges are 35 km maximum at 1300 nm for multimode fiber and 130 km maximum at 1550 nm for singlemode fiber. The tester includes these features:

- Automatic analysis of OTDR traces and events helps you identify and locate faults on multimode (850 nm and 1300 nm; 50 µm and 62.5 µm) and singlemode (1310 nm and 1550 nm) fiber.
- Shows OTDR results as an intuitive map of events, a table of events, and an OTDR trace.
- Automatic bi-directional averaging gives you more accurate loss measurements than measurements made in one direction.
- Gives a PASS or FAIL result based on a test limit that you specify.
- "Document Only" test limit is available if PASS/FAIL results are not necessary.
- Touchscreen lets you quickly navigate through different views of the results and see more information about events.
- SmartLoop™ test: One test gives you OTDR results for both fibers in a link.

- DataCenter OTDR™ test gives optimal performance when you do tests on fiber installations that have short links, many connections, and possibly large reflections.
- FaultMap™ test lets you make maps of your cable plant, see patch cords as short as 0.5 m, and see events that have poor reflectance.
- Visual fault locator helps you verify the continuity of fibers and locate faults in fibers and connectors.
- Optional FiberInspector™ video probe lets you inspect fiber endfaces and save the images in test reports.
- Saves approximately 2000 OTDR tests on fiber links with an average length of 2 km, and up to 5000 tests for lengths less than 2 km.

Connectors, Keys, and LEDs

See Figure 58.

1. LCD display with touchscreen.
2. Singlemode OTDR port with interchangeable SC adapter and protective cap. The LED in front of the port turns on when the port emits an optical signal.
3. Multimode OTDR port with interchangeable SC adapter and protective cap. The LED in front of the port turns on when the port emits an optical signal.
4. Visual fault locator port and protective cap. The LED in front of the port turns on when the port emits an optical signal.

Warning

Do not look directly into optical connectors. Some sources emit invisible radiation that can cause permanent damage your eyes.

5. Button that controls the VFL.

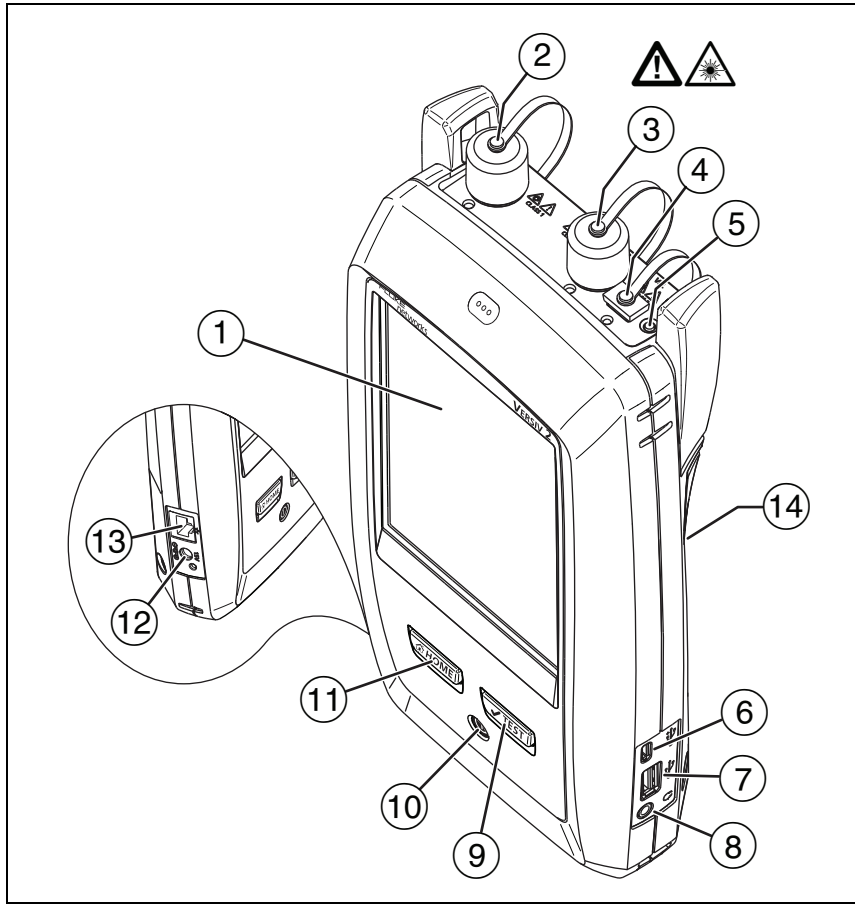

BV06.EPS

Figure 58. Connectors, Keys, and LEDs (OptiFiber Pro Quad OTDR shown)

⑥ Micro-AB USB port: This USB port lets you connect the tester to a PC so you can upload test results to the PC and install software updates in the tester.

⑦ Type A USB port: This USB host port lets you save test results on a USB flash drive and connect the FI-1000 video probe to the tester.

⑧ Headset jack.

⑨ [✔TEST]: Starts a test. To start a test, you can also tap **TEST** on the display.

⑩ [⏻]: Power key.

⑪ [HOME]: Press [HOME] to go to the home screen.

⑫ Connector for the AC adapter. The LED is red when the battery charges, and green when the battery is fully charged. The LED is yellow if the battery will not charge. See “Charge the Battery” on page 11.

⑬ RJ45 connector: Lets you connect to a network for access to Fluke Networks cloud services.

⑭ Decal with laser safety information:

How to Remove and Install the Connector Adapters

You can change the connector adapters on the OTDR ports of the modules to connect to SC, ST, LC, and FC fiber connectors. You can remove the adapter also to clean the fiber endface in the port. See Figure 59.

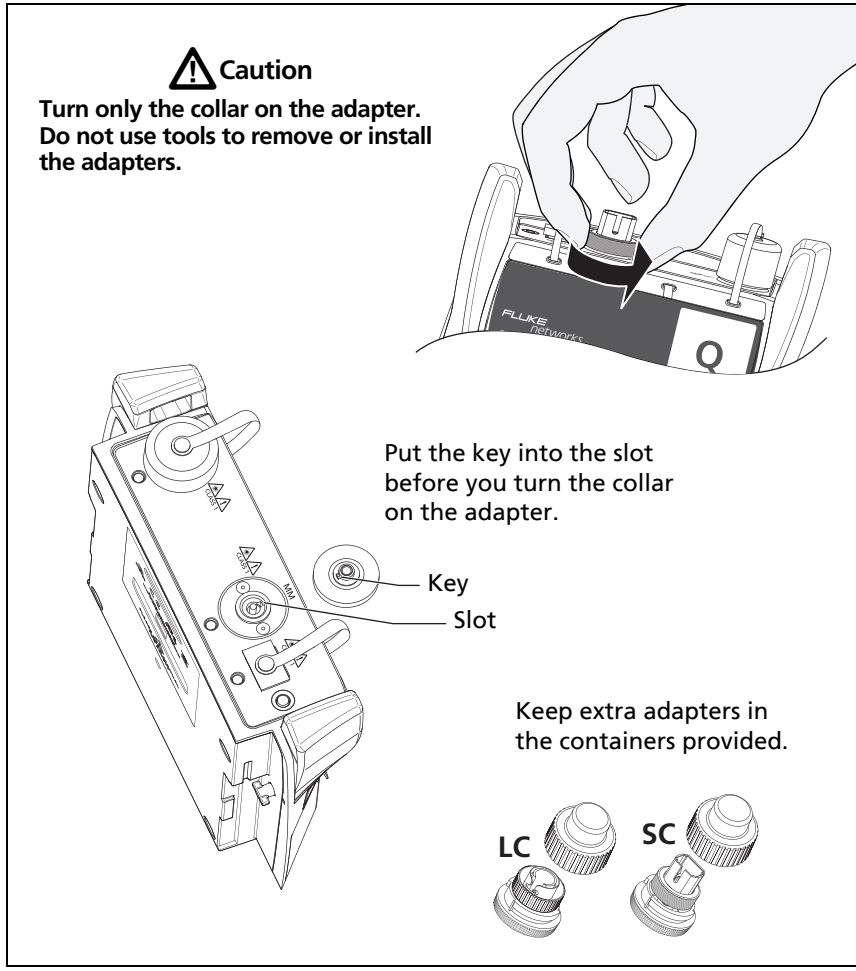

GPU165.EPS

Figure 59. How to Remove and Install the Connector Adapters

The OptiFiber Pro Home Screen

The home screen (Figure 60) shows important test settings. Before you do a test, make sure these settings are correct.

GPU02.EPS

Figure 60. The Home Screen

(1) **PROJECT**: The project contains the settings for a job and helps you monitor the status of a job. When you save test results, the tester puts them in the project. Tap the **PROJECT** panel to edit the project settings, select a different project, or make a new project.

② Shows a summary of the test results in the project:

✔: The number of tests that passed.

✘: The number of tests that failed.

③ The test setup panel shows the settings the tester will use when you tap **TEST** or press ✔TEST.

To change these settings, tap the panel, select the test on the **CHANGE TEST** screen, tap **EDIT**, select different settings on the **TEST SETUP** screen, then tap **SAVE**.

Note

You can set up tests for any module that the tester can use, even when no module is attached.

④ **Next ID**: The **Next ID** panel shows the ID that the tester gives to the next test results you save.

Tap **Next ID** to do these tasks:

- Enter an ID, select a different ID in the ID set, select a different set of IDs, or make a new set. The tester adds the IDs and ID sets you make to the project that shows on the home screen.
- Turn **Auto Save** on or off.
- Select **End 1** or **End 2** for OTDR and FiberInspector tests.
- Enter a name for **End 1** and **End 2**.

⑤ **Operator**: The name of the person who does the job. You can enter a maximum of 20 operator names. For each operator you can also enter the email address that the operator will use as an ID to sign in to LinkWare Live.

⑥ **TOOLS**: The **TOOLS** menu lets you set up the compensation function for the launch/tail cords, use tools such as the real-time trace and the FiberInspector test, see the status of the tester, and set user preferences such as the language and the display brightness.

⑦ **RESULTS**: Tap **RESULTS** to see and manage the results that are saved in the tester.

⑧ **SYNC**: Tap **SYNC** to sync projects with LinkWare Live.

⑨ **TEST**: Tap **TEST** to do the test shown in the test setup panel.The percentage of the tests in the project that are completed. The tester uses the number of available IDs and the tests you selected on the **CABLE ID SETUP** screen to calculate this percentage. See Figure 89 on page 223. **% Tested** does not show if your project contains only a **Next ID** list. See "About Next ID Sets" on page 225 for more information about the **Next ID** list.

⑩ The type of module attached to the tester. If no module is attached, this screen shows **HOME**.

⑪ The asset management icon shows when the owner of a LinkWare Live account has enabled the asset management service on the tester. See "About the Asset Management Service" on page 238.

Settings for OTDR Tests

Table 7 gives descriptions of the settings for OTDR tests. To set up a project, which includes the settings in Table 7, cable IDs, and operator names, see Chapter 11.

To set up an OTDR test

1. On the home screen, tap the test setup panel.
2. On the **CHANGE TEST** screen, select an OTDR test to change, then tap **EDIT**.

   Or to set up a new OTDR test, tap **NEW TEST** then tap a **Test Type**.
3. On the **TEST SETUP** screen, tap the panels to change settings for the test. See Table 7.
4. On the **TEST SETUP** screen, tap **SAVE** when your test setup is completed.

5 On the **CHANGE TEST** screen, make sure the button next to the test is selected, then tap **USE SELECTED**.

Table 7. Settings for OTDR Tests

Module	Select the OTDR module you will use. To select a different module, tap the **Module** panel on the **TEST SETUP** screen, then tap a module.
Test Type	When you turn on the tester, the **Test Type** shows the test that was last selected. **Auto OTDR**: The tester automatically selects settings that give you the best view of the events on the cabling. This mode is the easiest to use and is the best choice for most applications. To see the settings the tester used for an **Auto OTDR** test, tap **SETTINGS** on the trace screen. *Note* *Some unusual faults can cause the* **Auto OTDR** *test to show an unsatisfactory trace. If this occurs, use the* **Manual OTDR** *test to get a better trace.* **Manual OTDR**: This mode lets you select settings to control the qualities of the trace. See the Technical Reference Handbook. **DataCenter OTDR**: This test is optimized for fiber installations that have short links, many connections, and the possibility of large reflections. *Notes* *By default, the* **DataCenter OTDR** *test uses 850 nm for multimode fiber and 1310 nm for singlemode fiber. These are the wavelengths typically used in data centers. You can select other wavelengths if necessary.* *You must use launch compensation when you do a* **DataCenter OTDR** *test.*

(continued)

Table 7. Settings for OTDR Tests (continued)

Test Type (cont.)	**FaultMap**: The FaultMap test can show connections that do not show on the OTDR EventMap and connections that are poor because they have high reflectance. See "The FaultMap Test" on page 178. **SmartLoop OTDR (Auto)** and **SmartLoop OTDR (Manual)**: The SmartLoop test lets you connect the far ends of the two fibers in a link so that one OTDR test gives you results for both fibers. The Auto and Manual settings operate the same as for the OTDR test. See "The SmartLoop Test" on page 184.
Manual OTDR Settings	This item shows only if you select **Manual OTDR** or **SmartLoop OTDR (Manual)** for the **Test Type**. Manual OTDR mode lets you select settings to control the qualities of the trace. See the Technical Reference Handbook.
Bi-Directional	This setting shows only if you select **SmartLoop OTDR (Auto)** or **SmartLoop OTDR (Manual)** for the **Test Type**. **Off**: The tester does the SmartLoop test in only one direction. **On**: The tester does the SmartLoop test in both directions and automatically calculates bi-directional averages of loss. See "Bi-Directional SmartLoop Tests" on page 191.
Launch Compensation	Tap the control to turn the launch compensation function on or off. See"About Launch and Tail Cords" on page 160.
Wavelength	Select the wavelengths you want to use. You can do tests at one or all of the wavelengths supported by the module you selected.
Fiber Type	Select a fiber type that is correct for the type you will test. To see a different group of fiber types, tap **MORE**, then tap a group. *Note* *Select a fiber type before you select a test limit and wavelengths. The tester shows only the test limits and wavelengths that are applicable to the selected fiber type.*

Table 7. Settings for OTDR Tests (continued)

Fiber Type Settings	**IR**: The tester uses the index of refraction to calculate the optical length of the fiber. Each fiber type includes the value specified by the manufacturer. To use a different IR, make a custom fiber type. See the Technical Reference Handbook. **Backscatter**: Backscatter is the backscatter coefficient. The tester uses this value to calculate the reflectance of events for OTDR tests and the overall ORL for the link. Each fiber type includes the value specified by the manufacturer. To use a different backscatter value, make a custom fiber type. See the Technical Reference Handbook.
Test Limit	Select the correct test limit for the job. Generic limits, such as **General Fiber** and **Document Only**, let you do tests when no industry-standard limit is applicable and you do not want to make a custom limit. These limits are in the **Miscellaneous** group. To see a different group of limits, tap **MORE**, then tap the name of a group. Some test limits use the measured length of the fiber to calculate a limit for loss.
Test Limit Settings	This item shows only if the selected test limit calculates a loss limit for each link. For such limits, enter the number of connectors and splices in the link. See the Technical Reference Handbook.

About Launch and Tail Cords

Launch and tail cords let the tester measure the loss and reflectance of the first and last connectors in the cabling and also include them in the measurement of overall loss. Without launch and tail cords, no backscatter is available before the first connector nor after the last. To measure the properties of a connector, the tester must measure the backscatter before and after the connector.

Fluke Networks recommends that you use launch and tail cords. You should also use the launch/tail cord compensation function to remove the lengths of these fibers from the OTDR measurements.

If you select a test limit that requires you to use launch and tail cords, the tester shows a warning message when you try to do an OTDR test without launch and tail cords.

⚠ Caution

For tests on cabling that has angled physical contact (APC) connectors, use only launch/tail cords that have APC connectors at the ends connected to the cabling. Other connector types cause large reflections that can cause unreliable test results.

Notes

Do not use hybrid patch cords to connect the launch or tail cords to the cabling under test. Use launch and tail cords with the correct connectors to connect directly to the cabling under test. This gives the best measurement of the first and last connectors in the link. Launch and tail cords with different types of connectors are available from Fluke Networks.

***Launch + Tail** compensation usually gives the most accurate measurements.*

The style of the case for your launch/tail cords can be different from the cords shown in this manual.

How to set up the launch compensation function

1. Select launch and tail cords that have the same type of fiber as the fiber you will test.
2. On the home screen, tap the test setup panel. On the **CHANGE TEST** screen, select an OTDR test to change, then tap **EDIT**. Or to set up a new OTDR test, tap **NEW TEST** then tap **Auto OTDR**, **Manual OTDR**, or **DataCenter OTDR**.
3. On the **TEST SETUP** screen, tap the **Launch Compensation** control to set it to **On**.
4. On the **TEST SETUP** screen, make sure the **Fiber Type** is correct. Change it if necessary.
5. On the **TEST SETUP** screen, tap **SAVE**.
6. On the home screen, tap the **TOOLS** icon, then tap **Set Launch Compensation**.
7. On the **SET LAUNCH METHOD** screen tap the type of compensation you want to do.
8. Clean and inspect the OTDR port and the launch/tail cord connectors.
9. Make the connections for the type of compensation you selected, as shown on the **SET LAUNCH METHOD** screen.
10. Tap **SET**.
11. When the **SET LAUNCH COMP** screen shows, select the event or events that are the end of the launch cord and the start of the tail cord (if you used a tail cord).
12. Tap **SAVE**.

Figure 71 shows an example of an OTDR trace with launch and tail markers enabled.

Note

If you change the launch or tail cord, do the compensation procedure again.

How to Prevent Damage to the Launch Cord Connectors

When you do not use a launch cord, keep the connectors attached to the case or inside the case. See Figure 61.

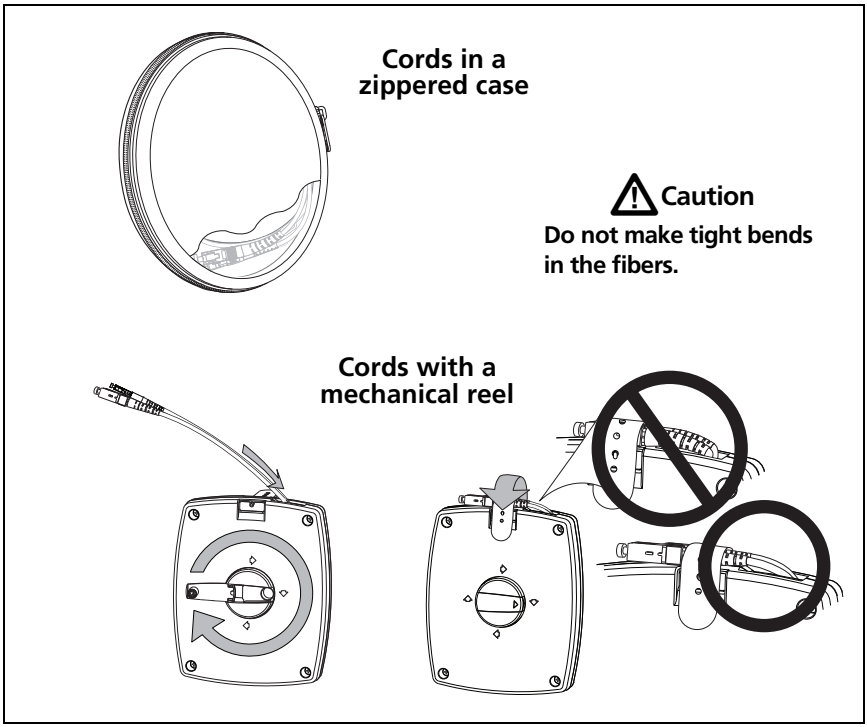

GPU44.EPS

Figure 61. How to Prevent Damage to the Launch Cord Connectors

How to Hang the Launch Cords

The optional TPAK magnet and strap let you hang the launch cords from metal surfaces (Figure 62).

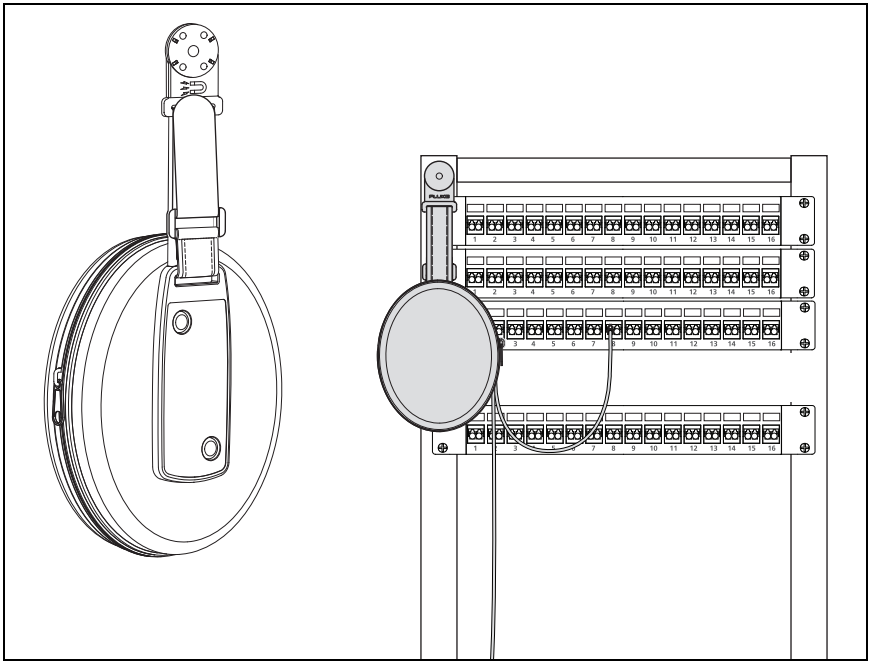

GPU191.EPS

Figure 62. How to Use the Optional TPAK Magnetic Hanger

OTDR Port Connection Quality

When you do an OTDR test, the test shows the quality of the OTDR port connection (Figure 63). If a test takes more than approximately 3 seconds, the **PROGRESS** screen also shows a preview of the OTDR trace. The trace is black for one wavelength and blue for the other wavelength.

If the gauge is not in the Good range

- Clean the OTDR port and the fiber connector. Use a video probe to inspect the endfaces in the port and fiber connector for scratches and other damage. If an endface on the tester shows damage, contact Fluke Networks for service information.

- If the gauge stays outside the **Good** range, remove the adapter from the module and inspect the adapter for damage. Make sure that the white plastic ring inside the center tube shows no damage.

A poor OTDR connection increases the dead zone at the connector. The dead zone can hide faults that are near the OTDR connector.

A poor connection also decreases the strength of the signal from the OTDR. The weaker signal causes more noise on the trace, which can cause the OTDR to miss events. It also decreases the dynamic range.

When the test is completed, the quality gauge shows in the details for the **OTDR Port** event on the EventMap screens. The tester includes the gauge with the test results you save.

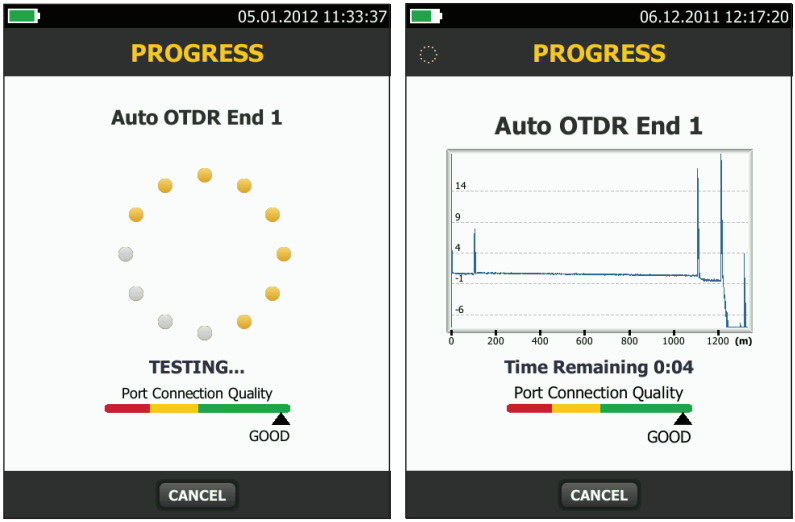

GPU17.EPS

Figure 63. The OTDR Port Connection Quality Gauge and Progress Screen

How to Do an OTDR Test

Figure 64 shows the equipment for OTDR tests.

To do an OTDR test

1. Make sure that the home screen shows the correct settings for the job. If it is not necessary to use specific settings, set the test type to **Auto OTDR** to make sure the results show all of the events on the fiber.
2. Clean and inspect the connectors on the launch and tail cords and the fiber to be tested.
3. Connect the tester to the link as shown in Figure 65, 66, or 67.
4. Tap **TEST** or press ✔TEST.

Note

The tester shows a warning if there is an optical signal on the fiber.

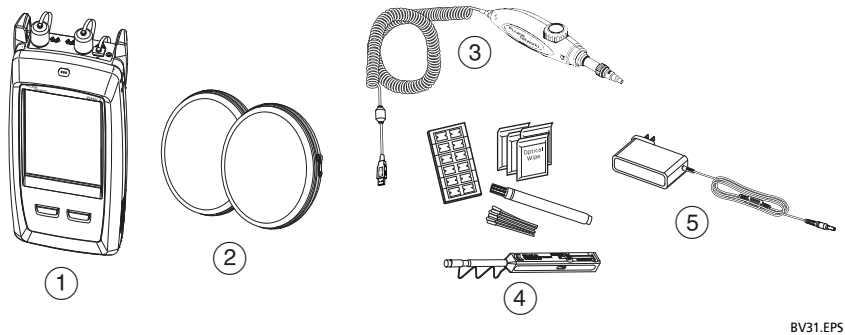

1. Versiv 2 unit with OTDR module installed
2. Launch and tail cords (match the fiber to be tested)
3. FI-1000 video probe with USB connector
4. Fiber cleaning supplies
5. AC adapter (optional)

Figure 64. Equipment for OTDR Tests

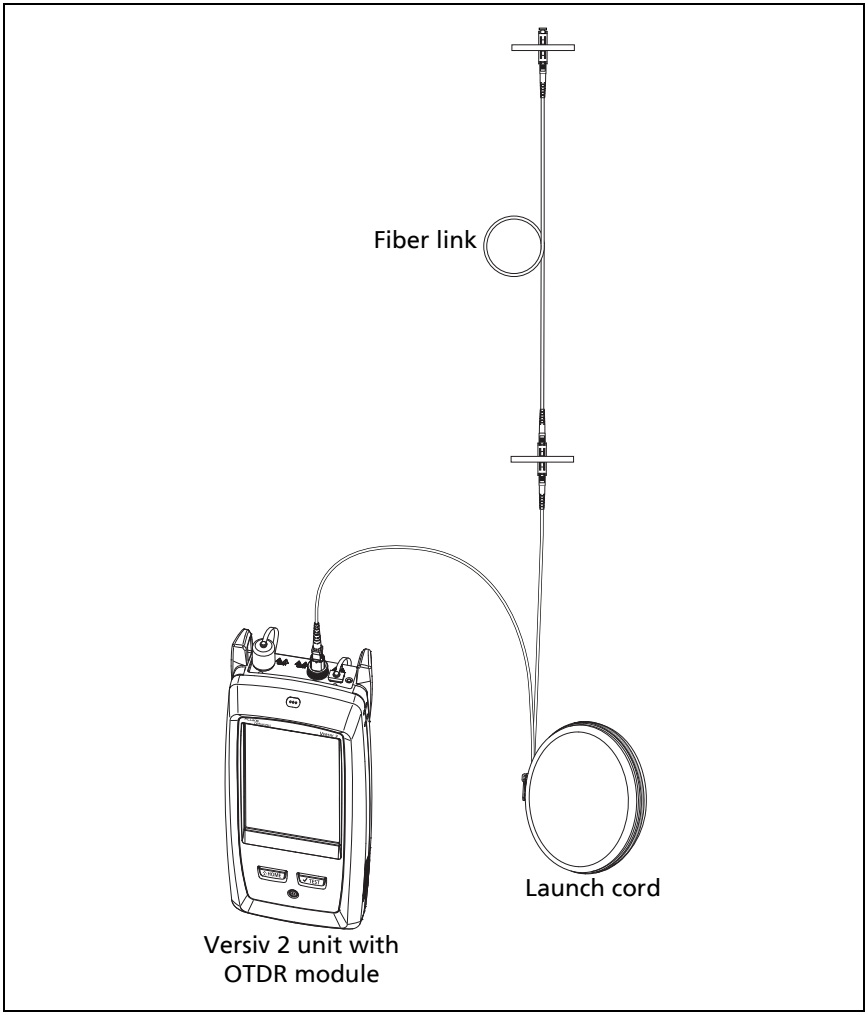

BV03.EPS

Figure 65. OTDR Connected with a Launch Cord