Type Approval User Guide

Quick start guide
Installation& Configuration

Technical Reference Document
Version 1.0
© August-2018 RTX A/S, Denmark

Trademarks

RTX and the combinations of its logo thereof are trademarks of RTX A/S, Denmark.
Other product names used in this publication are for identification purposes and maybe the trademarks of their respective companies.

Disclaimer

The contents of this document are provided about RTX products. RTX makes no representations with respect to completeness or accuracy of the contents of this publication and reserves the right to make changes to product descriptions, usage, etc., at any time without notice. No license, whether express, implied, to any intellectual property rights are granted by this publication

Confidentiality

This document should be regarded as confidential, unauthorized copying is not allowed

© August-2018 RTX A/S, Denmark, All rights reserved
http://www.rtx.dk

Table of Contents

Type Approval User Guide for DBS-210-3PC-NA-K9 1
1 About This Document 4
1.1 Audience 4
1.2 When Should I Read This Guide 4
1.3 Important Assumptions 4
1.4 Abbreviations 4
1.5 Document History 4
1.6 Documentation Feedback 4
2 Introduction – System Overview 5
2.1 Hardware Setup 5
2.2 Components of SME VoIP System 6
2.2.1 RTX Base Stations 6
2.2.2 SME VoIP Administration Server/Software 6
2.2.3 RTX Wireless Handset 6
2.3 Wireless Bands 6
2.4 System Capacity (in Summary) 7
2.5 Advantages of SME VoIP System 7
3 Installation of Base Stations/Repeater 8
3.1 Package – Contents/Damage Inspection 8
3.2 RTX Base Station Mechanics 9
3.3 RTX Base Unit – Reset feature 10
3.4 Installing the Base Station 11
3.4.1 Mounting the Base Stations/Repeaters: 11
3.5 Find IP of Base Station 11
3.5.1 Using handset Find IP feature 11
3.5.2 Using browser IPDECT 11
3.6 Login to Base SME Configuration Interface 11
4 Making Handset Ready 12
4.1 Package – Contents/Damage Inspection 12
4.2 Before Using the Phone 13

1 About This Document

This document describes the installation and configuration of the Cisco VoIP System (DBS-210-3PC-NA-K9 base, CP-6825-3PC-K9, CP-6825-3PC-NA-K9, CP-6825-RGD-K9, CP-6825-RGD-NA-K9 handset).

1.1 Important Assumptions

This document was written with the following assumptions in mind:

1) You understand network deployment in general
2) You have working knowledge of basic TCP/IP/SIP protocols, Network Address Translation, etc...
3) A proper site survey has been performed, and the administrator have access to these plans

1.2 Abbreviations

For this document, the following abbreviations hold:

DHCP:	Dynamic Host Configuration Protocol
DNS:	Domain Name Server
HTTP(S):	Hyper Text Transfer Protocol (Secure)
(T)FTP:	(Trivial) File Transfer Protocol
IOS:	Internetworking Operating System
PCMA:	A-law Pulse Code Modulation
PCMU:	mu-law Pulse Code Modulation
PoE:	Power over Ethernet
RTP:	Real-time Transport Protocol
RPORT:	Response Port (Refer to RFC3581 for details)
SIP:	Session Initiation Protocol
SME:	Small and Medium scale Enterprise
VLAN:	Virtual Local Access Network
TOS:	Type of Service (policy based routing)
URL:	Uniform Resource Locator
UA:	User Agent

1.3 Document History

REVISION	AUTHOR	ISSUE DATE	COMMENTS
0.1	CAP	16-Aug-2018	First Draft

1.4 Documentation Feedback

We always strive to produce the best and we also value your comments and suggestions about our documentation. If you have any comments about this guide, please enter them through the Feedback link on the RTX website. We will use your feedback to improve the documentation.

2 Introduction – System Overview

In a typical telephony system, the network setup is the interconnection between Base-stations, “fat” routers, repeaters, portable parts, etc. The back-bone of the network depends on the deployment scenario, but a ring or hub topology is used. The network has centralized monitoring, and maintenance system.

The system is easy to scale up and supports from 1 to 249 bases in the same network. Further it can support up to 1000 registered handsets (RTX8630, RTX8830 and RTX8430). The Small and Medium Scale Enterprise (SME) VoIP system setup is illustrated below. Based on PoE interface each base station is easy to install without additional wires other than the LAN cable. The system supports the IP DECT CAT-IQ repeater RTX4024 with support up to 5 channels simultaneous call sessions.

The following figure gives a graphical overview of the architecture of the SME VoIP System:

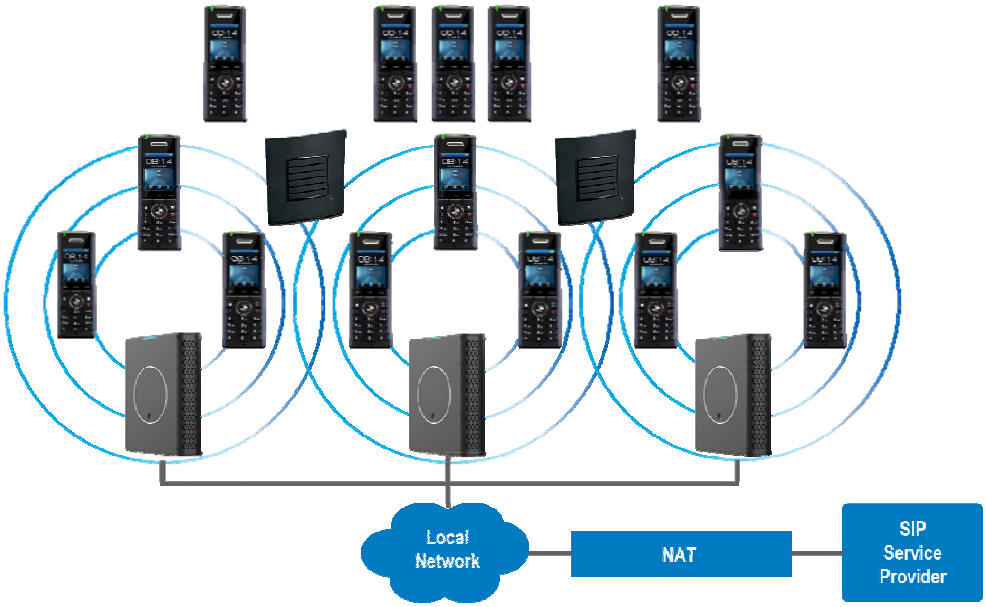

2.1 Hardware Setup

SME network hardware setup can be deployed as follows:
Base-station(s) are connected via Layer 3 and/or VLAN Aware Router depending on the deployment requirements. The Layer 3 router implements the switching function.
The base-stations are mounted on walls or lamp poles so that each base-station is separated from each other by up to 50m indoor[1] (300m outdoor). Radio coverage can be extended using repeaters that are installed with same distance to base-station(s). Repeaters are range extenders and cannot be used to solve local call capacity issues. In this case additional bases must be used.
The base-station antenna mechanism is based on space diversity feature which improves coverage. The base-stations uses complete DECT MAC protocol layer and IP media stream audio encoding feature to provide up to 10 simultaneous calls.

[1] Measured with European DECT radio and depends on local building layout and material

2.2 Components of SME VoIP System

RTX SME VoIP system is made up of (but not limited to) the following components:

- At least one RTX Base Station is connected over an IP network and using DECT as air-core interface.
- RTX IP DECT wireless Handset.
- RTX SME VoIP Configuration Interface; is a management interface for SME VoIP Wireless Solution. It runs on all IP DECT Base stations. Each Base station has its own unique settings.

2.2.1 RTX Base Stations

The Base Station converts IP protocol to DECT protocol and transmits the traffic to and from the end-nodes (i.e. wireless handsets) over a channel. It has 12 available channels.
In a multi-cell setup, each base station has:

- 8 channels have associated DSP resources for media streams.
- The remaining 4 channels are reserved for control signaling between IP Base Stations and the SIP/DECT end nodes (or phones).

Base Stations are grouped into clusters. Within each Cluster, Base Stations are synchronized to enable a seamless handover when a user moves from one base station coverage to another. For synchronization purposes, it is not necessary for Base Stations to communicate directly with each other in the system. E.g. a Base Station may only need to communicate with the next in the chain. It is advisable for a Base Station to identify more than one Base Station to guarantee synchronization in the situation that one of the Base Stations fails.
The 4 control signaling channels are used to carry bearer signals that enable a handset to initiate a handover process.

2.2.2 SME VoIP Administration Server/Software

This server is referred to as SME VoIP Configuration Interface.
The SME VoIP Configuration Interface is a web based administration page used for configuration and programming of the base station and relevant network end-nodes. E.g. handsets can be registered or de-registered from the system using this interface.
The configuration interface can be used as a setup tool for software or firmware download to base stations, repeaters and handsets. Further, it is used to check relevant system logs that can be useful to administrator. These logs can be used to troubleshoot the system when the system faces unforeseen operational issues.

2.2.3 RTX Wireless Handset

The handset is a lightweight, ergonomically, and portable unit compatible with Wideband Audio (G.722), DECT, GAP standard, CAT-iq audio compliant.
The handset includes color display with graphical user interface. It can also provide the subscriber with most of the features available for a wired phone, in addition to its roaming and handover capabilities. Refer to the relevant handset manuals for full details handset features.

2.3 Wireless Bands

The bands supported in the SME VoIP are summarized as follows:
Frequency bands:
1880 – 1930 MHz (DECT)
1880 – 1900 MHz (10 carriers) Europe/ETSI
1910 – 1930 MHz (10 carriers) LATAM
1920 – 1930 MHz (5 carriers) US

2.4 System Capacity (in Summary)

SME network capacity of relevant components can be summarized as follows:

DESCRIPTION	CAPACITY
Min ## of Bases Single Cell Setup	1
Max ## of Bases in Multi-cell Setup (configurable)	50/127/254
Single/Multi Cell Setup: Max ## of Repeaters	50 bases and 3 repeaters per Base 127 bases and 1 repeater per Base 254 bases and 0 repeaters
Multi-cell Setup: Total Max ## of Repeaters	100
Max ## of Users (SIP registrations) per Base	30
Max ## of Users per SME VoIP System	limited to 1000
Multi-cell Setup: Max ## of Synchronization levels	24
Single Cell Setup: Max ## Simultaneous Calls	10 per Base station
Multi-cell Setup: Max ## of Calls	8 per Base station
Total Max ## Simultaneous Calls (Multi-cell Setup)	Limited to 1000
Repeater: Max ## of Calls (Narrow band)	5
Repeater: Max ## of Calls (G722)	2

Quick Definitions

Single Cell Setup: SME telephony network composed of one base station
Multi-cell Setup: Telephony network that consists of more than one base station
Synchronization Level: Is the air core interface between two base stations.

2.5 Advantages of SME VoIP System

They include (but not limited to):

1. Simplicity. Integrating functionalities leads to reduced maintenance and troubleshooting, and significant cost reductions.

2. Flexibility. Single network architecture can be employed and managed. Furthermore, the architecture is amenable to different deployment scenarios, including Isolated buildings for in-building coverage, location with co-located partners, and large to medium scale enterprises deployment for wide coverage.

3. Scalability.SME network architecture can easily be scaled to the required size depending on customer requirement.

4. Performance. The integration of different network functionalities leads to the collapse of the protocolstack in a single network element and thereby eliminates transmission delays between network elements and reduces the call setup time and packet fragmentation and aggregation delays.

3 Installation of Base Stations/Repeater

After planning the network, next is to determine the proper places or location the relevant base stations will be installed. Therefore, we briefly describe the how to install the base station in this chapter.

3.1 Package – Contents/Damage Inspection

Before Package Is Opened:
Examine the shipping package for evidence of physical damage or mishandling prior to opening. If there is a proof of mishandling prior to opening, you must report it to the relevant support center of the regional representative or operator.

Contents of Package:
Make sure all relevant components are available in the package before proceeding to the next step.
Every shipped base unit package/box contains the following items:

- 3 x mounting screws and 1 x Anchor
- 1 x Plastic Wall mount
- Base unit

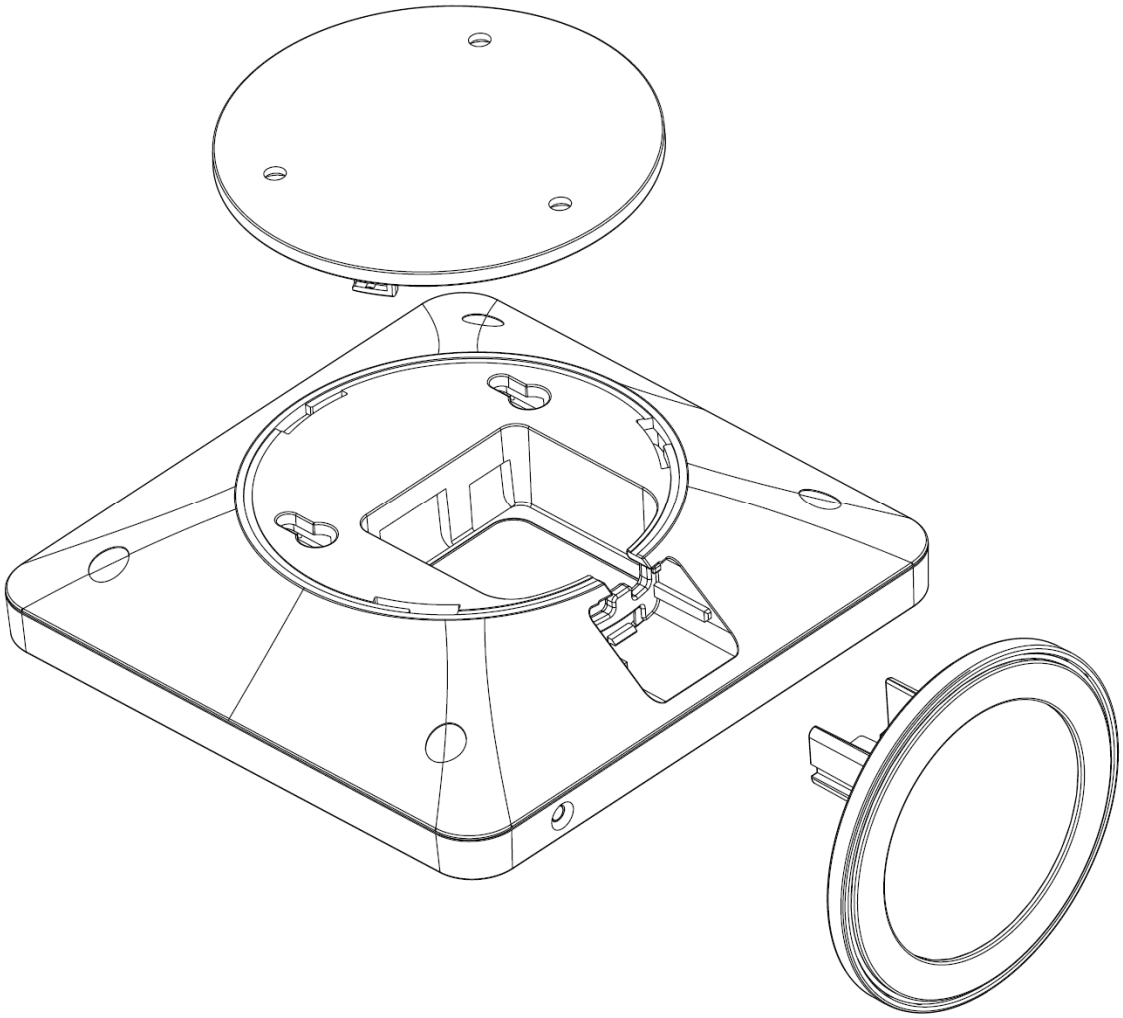

Damage Inspection:
The following are the recommended procedure for you to use for inspection:

1. Examine all relevant components for damage.
2. Make a “defective on arrival – DOA” report or RMA to the operator. Do not move the shipping carton until the operator has examined it. If possible, send pictures of the damage. The operator/regional representative will initiate the necessary procedure to process this RMA. They will guide the network administrator on how to return the damaged package if necessary.
3. If no damage is found, then unwrap all the components and dispose of empty package/carton(s) in accordance with country specific environmental regulations.

3.2 RTX Base Station Mechanics

The base station front end shows an LED indicator that signals different functional states of the base unit and occasionally of the overall network. The indicator is off when the base unit is not powered.

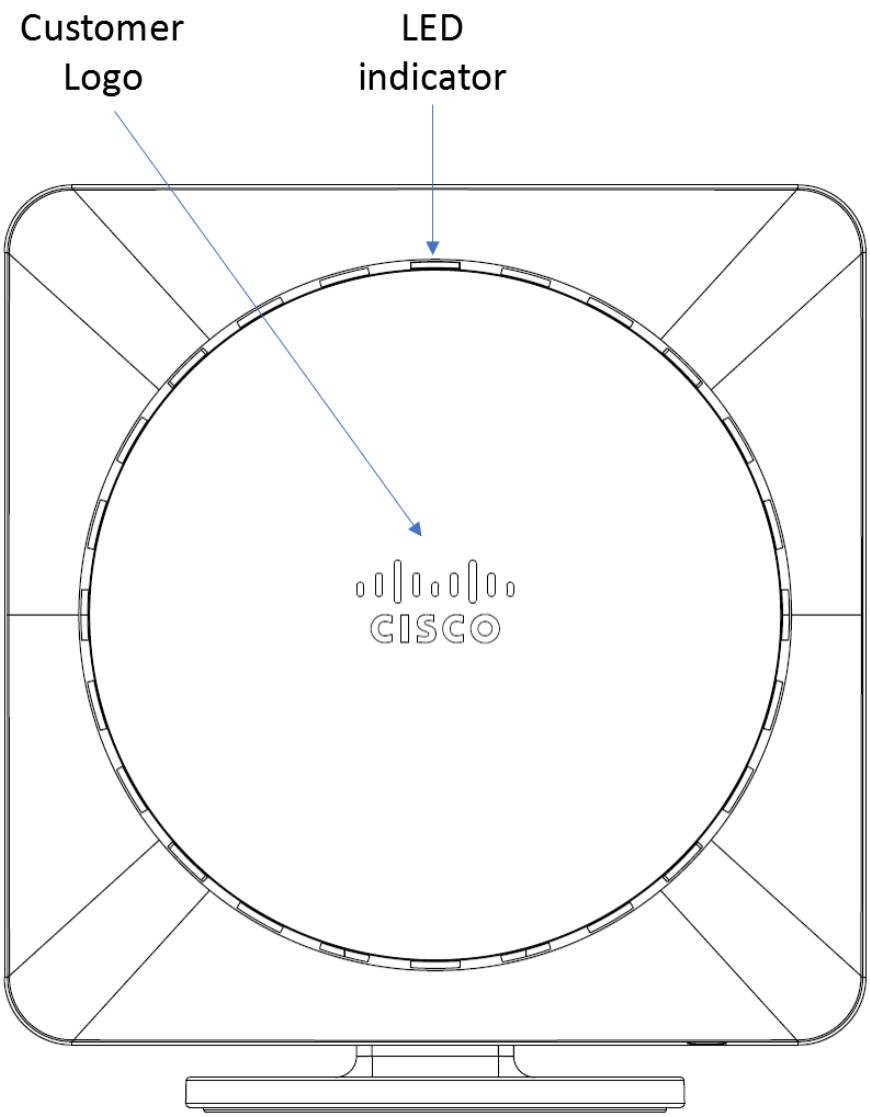

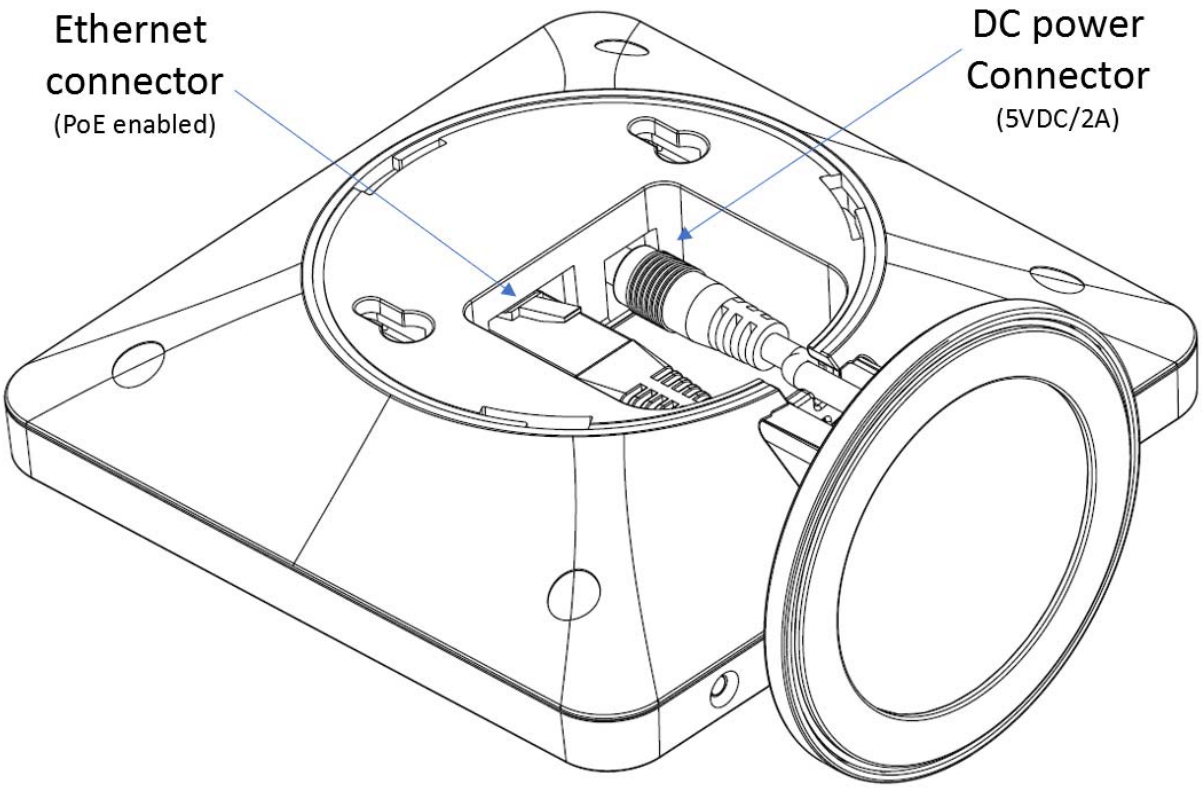

The table below summarizes the various LED states:

LED STATE	STATE
UNLIT	No power in unit
UNLIT/SOLID RED	Error condition
BLINKING GREEN	Initialization
SOLID RED	Factory reset warning or long press in BS reset button
BLINKING RED	Factory setting in progress
SOLID GREEN	Ethernet connection available (Normal operation)
BLINKING RED	Ethernet connect not available OR handset de/registration failed
SOLID RED	Critical error (can only be identified by RTX Engineers). Symptoms include no system/SIP debug logs are logged, etc.
ORANGE	Press reset button of base station.
BLINKING ORANGE	No IP address received

3.3 RTX Base Unit – Reset feature

It is possible to restart or reset the base station unit by pressing a knob at the rear side of the unit. Alternatively, it can be reset from the SME Configuration Interface. We do not recommend this; but unplugging and plugging the Ethernet cable back to the PoE port of the base station also resets the base unit.

3.4 Find IP of Base Station

To find IP of the installed base station two methods can be used; Using handset Find IP feature or browser IPDECT feature.

3.4.1 Using handset Find IP feature

On the handset press “Menu” key followed by the keys: *47* to get the handset into find bases menu. The handset will now scan for 8660 bases. Depending on the amount of powered on bases with active radios and the distance to the base it can take up to minutes to find a base.

- Use the cursor down/up to select the base MAC address for the base
- The base IP address will be shown in the display

The feature is also used for deployment.

3.4.2 Using browser IPDECT

Open any standard browser and enter the address:
http://ipdect<MAC-Address-Base-Station>
for e.g. http://ipdect00087B00AA10. This will retrieve the HTTP Web Server page from the base station with hardware address **00087B00AA10**.
This feature requires an available DNS server.

3.5 Login to Base SME Configuration Interface

1.Connect the Base station to a private network via standard Ethernet cable (CAT-5).

2.Use the IP find menu in the handset (Menu * 4 7 *) to determine the IP-address of the base station by matching the MAC address on the back of the base station with the MAC address list in the handset.

3.On the Login page, enter your authenticating credentials (i.e. username and password). By default, the username and password are **admin**. Click **OK** button.

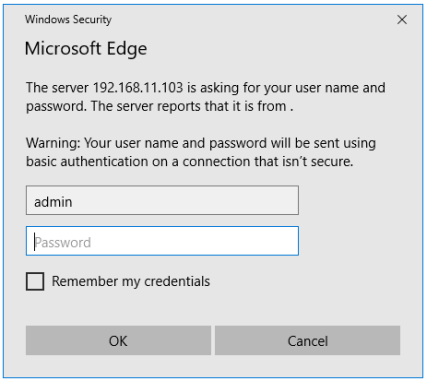

4.Once you have authenticated, the browser will display front end of the SME Configuration Interface. The front end will show relevant information of the base station.

Screenshot:

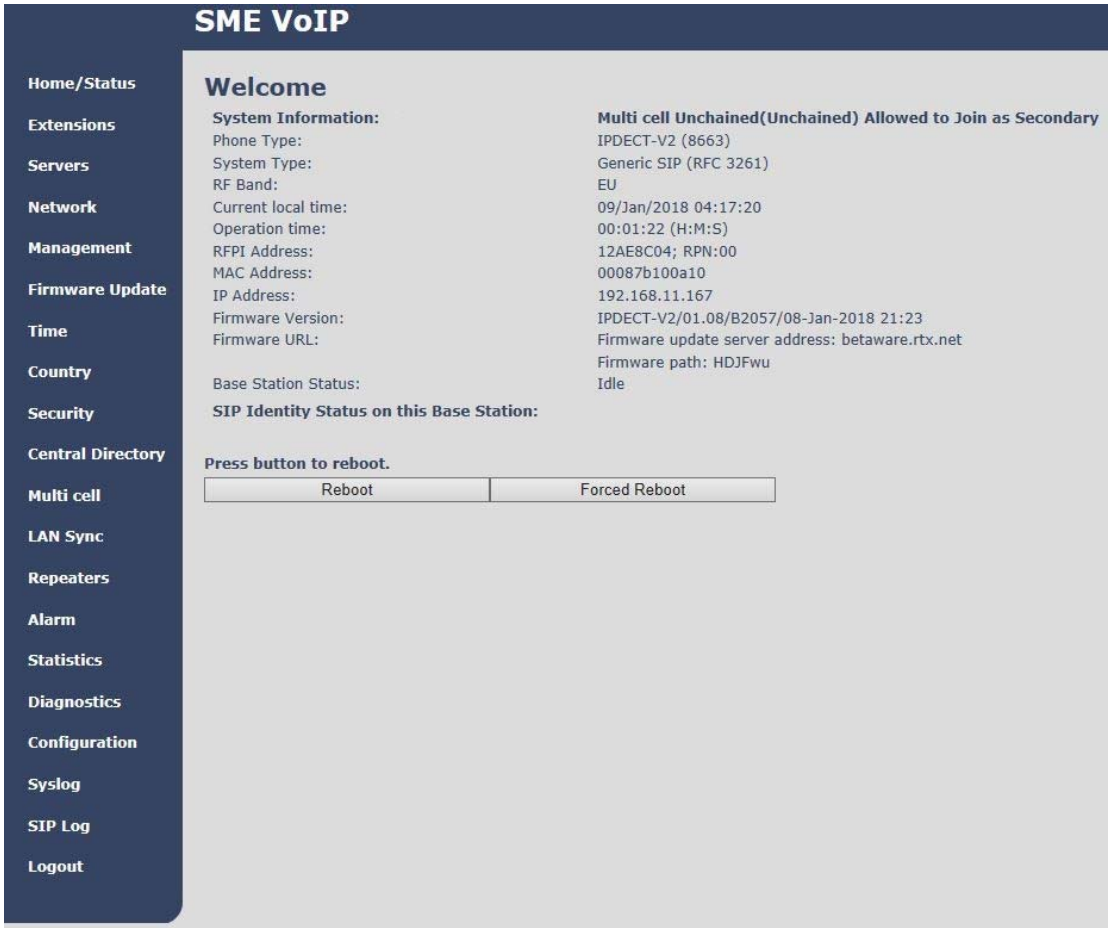

4 Making Handset Ready

In this chapter, we briefly describe how to prepare the handset for use, install, insert and charge new batteries. Please refer to an accompanying Handset User Guide for more information of the features available in the Handset.

4.1 Package – Contents/Damage Inspection

Before Package Is Opened:
Examine the shipping package for evidence of physical damage or mishandling prior to opening. If there is a proof of mishandling prior to opening, you must report it to the relevant support center of the regional representative or operator.

Contents of Package:
Make sure all relevant components are available in the package before proceeding to the next step.
Every shipped base unit package/box contains the following items:

- 1 x Handset hook
- 1 x A/C Adaptor
- 1 x Battery
- 1 x charger
- 1 x Handset Unit
- 1 x Battery cover,
- 1 x Belt hook

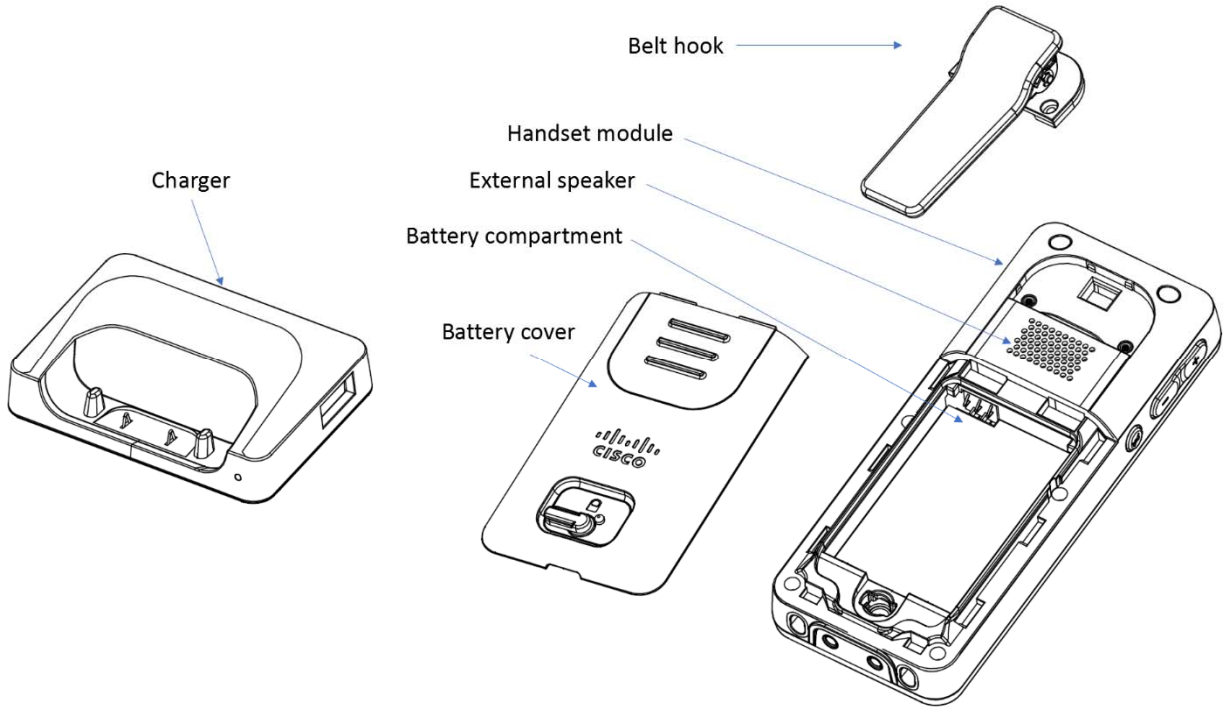

Damage Inspection:
The following are the recommended procedure for you to use for inspection:

1. Examine all relevant components for damage.
2. Make a “defective on arrival – DOA” report or RMA to the operator. Do not move the shipping carton until the operator has examined it. The operator/regional representative will initiate the necessary procedure to process this RMA. They will guide the network administrator on how to return the damaged package if necessary.
3. If no damage is found, then unwrap all the components and dispose of empty package/carton(s) in accordance with country specific environmental regulations.

4.2 Before Using the Phone

Here are the pre-cautions users should read before using the Handset:

Installing the Battery

1. Never dispose battery in fires, otherwise it will explode.
2. Never replace the batteries in potentially explosive environments, e.g. close to inflammable liquids/ gases.
3. ONLY use approved batteries and chargers from the vendor or operator.
4. Do not disassemble, customize, or short circuit the battery

Closing Back Cover

1. Slide the top of the battery cover into the designated slot of the handset (see step 1 in below drawing)
2. Press the bottom of the battery cover onto the handset (see step 2 in below drawing)
3. Move the lock pin to “locked position” (see step 3 in below drawing)

Replace Battery
Remove Back Cover from Handset. Remove the old battery and replace with a new one.

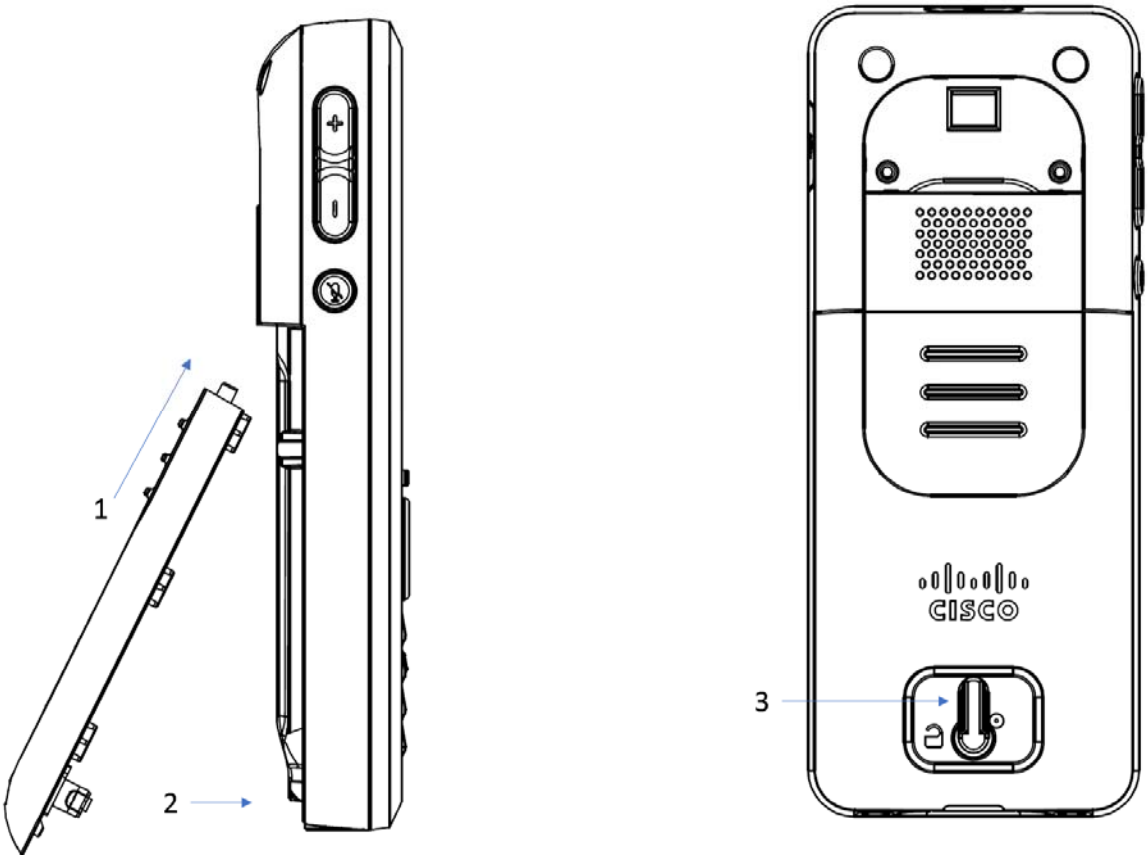

Using the Charger
Each handset is charged using a handset charger. The charger is a compact desktop unit designed to charge and automatically maintain the correct battery charge levels and voltage.
The charger Handset is powered by AC supply from 110-240VAC that supplies 5.0VDC at 2A.
When charging the battery for the first time, it is necessary to leave the handset in the charger for at least 10 hours before the battery is fully charged and the handset ready for use.

Handset in the Charger
For correct charging, ensure that the room temperature is between 5°C and 25°C/41°F and 77°F. Do not place the handset in direct sunlight. The battery has a built-in heat sensor which will stop charging if the battery temperature is too high.
If the handset is turned off when placed in charger, only the LED indicates the charging. When handset is turned off, the LED flashes at a low frequency while charging and lights constantly when the charging is finished. There will be response for incoming calls.
If the handset is turned on when charging, the display shows the charging status.

Handset Serial Number
The serial number (IPEI/IPUI number) of each handset is found either on a label, which is placed behind the battery, or on the packaging label. First, lift off handset back cover and lift the battery and read the serial number.
The serial number is needed to enable service to the handset. It must be programmed into the system database via the SME VoIP Configuration interface.

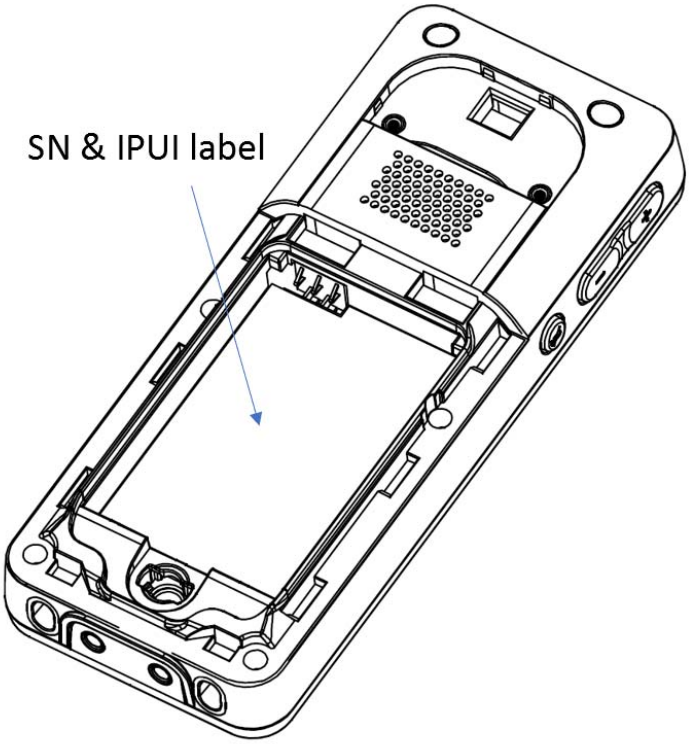
SN & IPUI label

FCC Warning:

This device complies with part 15 of the FCC Rules. Operation is subject to the following two conditions:

(1) This device may not cause harmful interference, and (2) this device must accept any interference received, including interference that may cause undesired operation. Any Changes or modifications not expressly approved by the party responsible for compliance could void the user's authority to operate the equipment.

Note: This equipment has been tested and found to comply with the limits for a Class B digital device, pursuant to part 15 of the FCC Rules. These limits are designed to provide reasonable protection against harmful interference in a residential installation. This equipment generates, uses and can radiate radio frequency energy and, if not installed and used in accordance with the instructions, may cause harmful interference to radio communications. However, there is no guarantee that interference will not occur in a particular installation. If this equipment does cause harmful interference to radio or television reception, which can be determined by turning the equipment off and on, the user is encouraged to try to correct the interference by one or more of the following measures:

—Reorient or relocate the receiving antenna.

—Increase the separation between the equipment and receiver.

—Connect the equipment into an outlet on a circuit different from that to which the receiver is connected.

—Consult the dealer or an experienced radio/TV technician for help.

FCC Exposure to Radio Frequency (RF) Signals

For Handset

This is a radio transmitter and receiver. It is designed and manufactured not to exceed the emission limitsfor exposure to radio frequency (RF) energy set by the Federal Communications Commission (FCC) of the U.S.Government. These limits are part of comprehensive guidelines and establish permitted levels of RF energy for the general population. The guidelines are based on the safety standards previously set by both U.S. and international standards bodies. These standards include a substantial safety margin designed to assure the safety of all persons,regardless of age and health. This device and its antenna must not be co-located or operating in conjunction with any other antenna or transmitter. This product has been shown to be capable of compliance for localized specific absorption rate (SAR) for uncontrolled environment/general population exposure limits specified in ANSI/IEEE Std. C95.1-1992 and had been tested in accordance with the measurement procedures specified in FCC/OET Bulletin 65 Supplement C (2001) and IEEE 1528.

For Base

This equipment complies with FCC radiation exposure limits set forth for an uncontrolled environment. This equipment should be installed and operated with minimum distance 20cm between the radiator& your body.

This transmitter must not be co-located or operating in conjunction with any other antenna or transmitter.

ISEDC Warning:

This device complies with ISEDC licence-exempt RSS standard(s). Operation is subject to the following two conditions:

(1) this device may not cause interference, and

(2) this device must accept any interference, including interference that may cause undesired operation of the device.

Le présent appareil est conforme aux CNR d'ISEDC applicables aux appareils radio exempts de licence.L'exploitation est autorisée aux deux conditions suivantes :

(1) l'appareil nedoit pas produire de brouillage, et

(2) l'utilisateur de l'appareil doit accepter tout brouillage radioélectrique subi, même si le brouillage est susceptible d'en compromettre le fonctionnement.

ISEDC Specific Absorption Rate (SAR) information

For Handset

SAR tests are conducted using standard operating positions accepted by the ISEDC with device transmitting at its highest certified power level in all tested frequency bands, although the SAR is determined at the highest certified power level, the actual SAR level of the device while operating can be well below the maximum value. Before a new model device is a available for sale to the public, it must be tested and certified to the ISEDC that it does not exceed the exposure limit established by the ISEDC, tests for each device are performed in positions and locations as required by the ISEDC. For body worn operation, this model device has been tested and meets the ISEDC RF exposure guidelines when used with an accessory designated for this product or when used with an accessory that contains no metal.

For Base

This equipment complies with ISEDC radiation exposure limits set forth for an uncontrolled environment. This equipment should be installed and operated with minimum distance 20cm between the radiator& your body.

This transmitter must not be co-located or operating in conjunction with any other antenna or transmitter.

ISEDC Radiation Exposure Statement:

For Handset

SAR l'utilisation des règles sma l'emplacement Le matériel de transmission et fonctionnant dans tous les essais à la certification, même si la puissance suprême a décidé le niveau, utilisation spécifique peut être très en deçà de la valeur de référence maximale.Types de matériel sont vendus au public un ancien, d'essai et de certification de l'exposition, limite maximum sma, chaque document et l'emplacement du matériel d'essai et conformément au document.Le modèle en physique, matériel d'essai et conforme aux directives d'exposition des radiofréquences sma quand une annexe désigné pour ce produit lors de leur utilisation ou des pièces de rechange ne contiennent pas de métal.

For Base

Cet équipement est conforme aux limites d'exposition aux radiations ISEDC définies pour un environnement non contrôlé. Cet équipement doit être installé et utilisé avec une distance minimale de 20 cm entre le radiateur et votre corps.
Cet émetteur ne doit pas être situé ou fonctionner conjointement avec une autre antenne ou un autre émetteur.