HERMES 2.0

("**H**ardware for **E**nhanced **R**emote-, **M**obility- & **E**mergency **S**ervices**"**)

Manual

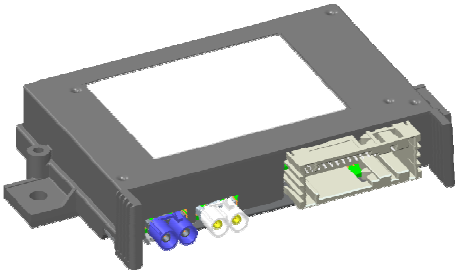

© HARMAN BECKER AUTOMOTIVE SYSTEMS GMBH
CONFIDENTIAL / ALL RIGHTS RESERVED

CONTENTS

1 TECHNICAL DESCRIPTION 3

1.1.1 Disclaimer 3

2 INTRODUCTION HERMES 4

3 SYSTEM DESCRIPTION 5

3.1.1 System features 5
3.1.2 Hermes Block Diagram 7
3.1.3 Audio 9
3.1.4 Diagnosis 10
3.1.5 Operating States 10
3.1.6 HW-clocking table 10
3.1.7 BT/WLAN Interface 3
3.1.8 Connectors 12
3.1.9 Pictures Hermes 13

4 DECLARATION OF CONFORMITY (DOC IN SHORT FORM) 14

4.1.1 English: 14
4.1.2 Bulgarian: 14
4.1.3 Spanish: 14
4.1.4 Czech: 14
4.1.5 Danish: 14
4.1.6 German: 14
4.1.7 Estonian: 15
4.1.8 Greek: 15
4.1.9 French: 15
4.1.10 Croatian: 15
4.1.11 Italian: 15
4.1.12 Latvian: 15
4.1.13 Lithuanian: 15
4.1.14 Hungarian: 15
4.1.15 Maltese: 16
4.1.16 Dutch: 16
4.1.17 Polish: 16
4.1.18 Portuguese: 16
4.1.19 Romanian: 16
4.1.20 Slovak: 16
4.1.21 Slovenian: 16
4.1.22 Finnish: 17
4.1.23 Swedish: 17

5 FCC COMPLIANCE STATEMENT, USA 18

6 ISED COMPLIANCE STATEMENT, CANADA 18

1 Technical Description

1.1.1 Disclaimer

The information contained in this document is the proprietary information of Harman Becker Automotive Systems GmbH (HBAS) in the Connected Car Division of HARMAN.

The contents are confidential and any disclosure to persons other than the officers, employees, agents or subcontractors of the owner or licensee of this document, without the prior written consent of HBAS, is strictly prohibit.

HBAS makes every effort to ensure the quality of the information it makes available. Not withstanding the foregoing, HBAS does not make any warranty as to the information contained herein, and does not accept any liability for any injury, loss or damage of any kind incurred by use of or reliance upon the information.

HBAS disclaims any and all responsibility for the application of the devices characterized in this document, and notes that the application of the device must comply with the SAFETY standards of the applicable country, and where applicable, with the relevant wiring rules.

HBAS reserves the right to make modifications, additions and deletions to this document due to typographical errors, inaccurate information, or improvements to programs and/or equipment at any time and without notice. Such changes will, nevertheless be incorporated into new editions of this document.

Copyright: Transmittal, reproduction, dissemination and/or editing of this document as well as utilization of its contents and communication thereof to others without express authorization are prohibit. Offenders will be helt liable for payment of damages. All rights are reserved.

2 Introduction HERMES

The project name HERMES has the meaning "**H**ardware for **E**nhanced **R**emote-, **M**obility- & **E**mergency **S**ervices" and thus describes the main features of this device. This unit was designed for automotive usage and contains the following features:
GSM, UMTS, LTE , USB, Bluetooth, Wireless LAN.

It provides different telematic services and is the interface between different types of Daimler car headunits and the public network. Therefore you can connect the headunit either over USB or BT or Wireless LAN with the HERMES Box and over GSM/UMTS/LTE it provides access to public network.

Due to the fact that Conectivity Box is used for different target markets we provide different versions that will support different GSM/UMTS/LTE-bands – depending on the target markets.

The Hermes unit will be used as gateway module for different Daimler Entry and High platforms.

© HARMAN BECKER AUTOMOTIVE SYSTEMS GMBH
CONFIDENTIAL / ALL RIGHTS RESERVED

3 System Description

3.1.1 System features

The **HERMES** provides the following features:

Calls:
The different calls can either be triggered via Airbag interface (E-Call only), buttons or Headunit.

EU E-Call:
- *Emergency Call to the PSAP in Europe (112 eCall);*
- *After call established, the backend pulls MSD via Inband*

ERA Glonass E-Call:
- *Emergency Call to the PSAP in Russia*
- *After call established, the backend pulls MSD via Inband*

E-Call (none US):
- *Emergency Call to a Bosch eCall center*
- *Before the call 2 SMS including the MSD are sent to backend. If fails, the backend does pull the MSD via inband*

E-Call (US):
- *Emergency Call to a Verison eCall center*
- *Before the call 2 messages (ATP) including the MSD are sent to backend. As soon call is connected, basic data is send to backend via DTMF.*

R-Call (none US)
- *Roadside / Workshop call to a Call center from Daimler*
- *As soon the call is connected, the backend does pull the MSD via inband*

R-Call (US):
- *Roadside / Workshop call to a Call center from Verison;*
- *Before the call 2 messages (ATP) including the MSD are sent to backend. As soon call is connected, basic data is send to backend via DTMF.*

I-Call (none US):
- Information call to a Call center from Daimler (none US)
- *As soon call is connected, basic data is send to backend via DTMF.*

I-Call (US):
- Information call to a Call center from Verison (US)
- *As soon call is connected, basic data is send to backend via DTMF.*

LTE Network in US (VoIP calls)
LTE / UMTS / GSM Network in non US countries (circuit switched calls)

Internal Communication to HeadUnit (in car communication)
HERMES acts as a "modem" for the headunit. It provides internet access and is routing data from external network to HU

WIFI 2.4 GHz and 5 Ghz (Only as client, For status and triggers a special protocol (WLAN Connectivity Control) is used)

BT (DUN)

The Headunit communicates via HERMES within a VPN tunnel or SSL secured with the Daimler backend. Traffic from/to HU is not accessable by HERMES. Firewall rules are setup to secure that routing.

HERMES communicates to the Backend via a secured SSL connection (TLS). Therefore, an initial certificate is stored on HERMES. HERMES does a certificate exchange (Certificate Exchange Protocol) with the Daimler backend to get a regular certificate (unique for each device). As soon HERMES got a regular certificate, IP functionality is available for other components (internal communication, backend communication, HU traffic).

HERMES is IPv4 Only

Telematic features:
The Telematic features are controlled via a proprietary protocol (Advanced Telematics Protocol). To enable/trigger a feature, a SMS is send from backend to HERMES. HERMES verifies this message based on a SMS key (calculated during CEP), time and other values. Then the command is executed. The result is most likely send via HTTP, as fallback there is SMS. Telematic features are enabled over the air by service authorisation based on market needs.

These below telematics features are not testable without proper registration at Daimler backend and car environment!

Remote Diagnostics:
- *Run internal scripts for diagnosis of other components in the car and sent back diagnosis results to the Daimler backend.*

Remote Door Lock/Unlock:
- *Lock/Unlock door via customer app and backend.*

Flash Lights Sound Horn:
- *Flash Lights Sound Horn via customer app and backend.*

POI/Route Download:
- *Sent POI/Route via customer app and backend.*

Freetext (with URL/Phone#):
- *Sent Freetext via backend. Only possible for call centers.*

Geofencing:
- *Notification of customer of geofence violations. Setup is done via customer homepage or app.*

Speed Alert:
- *Notification of customer of speed violations. Setup is done via customer homepage or app.*

Remote Update:
- *HERMES can update itself via OMA-DM*

Vehicle Remote Start (only US):
- *HERMES can start the engine with a special workflow initiated by backend or customer app.*

Auxiliary Heating:
- *HERMES can enable Auxiliary Heating via ATP*

Preconditioning (Electric Vehicle)
- *HERMES can enable Preconditioning via ATP*

Departure Time and Charge Optimization (Electric Vehicle)
- *HERMES can set Departure time and other EV settings via ATP*

DataCollector, RCS:
- *For several telematic features CAN signals are needed by the backend to show a status or check the state of different conditions. The DataCollector collects the signals based on enabled features and sents them to the backend (Remote Customer Support) on time or signal based triggers.*

© HARMAN BECKER AUTOMOTIVE SYSTEMS GMBH
CONFIDENTIAL / ALL RIGHTS RESERVED

3.1.2 Hermes Block Diagram

The following diagram shows the HERMES unit. The main functionalities of this box are:

1) Providing Network access for different telematic services
2) Providing E-Call (Emergency Call), R-Call (Road Service Call), I-Call (Information Call)

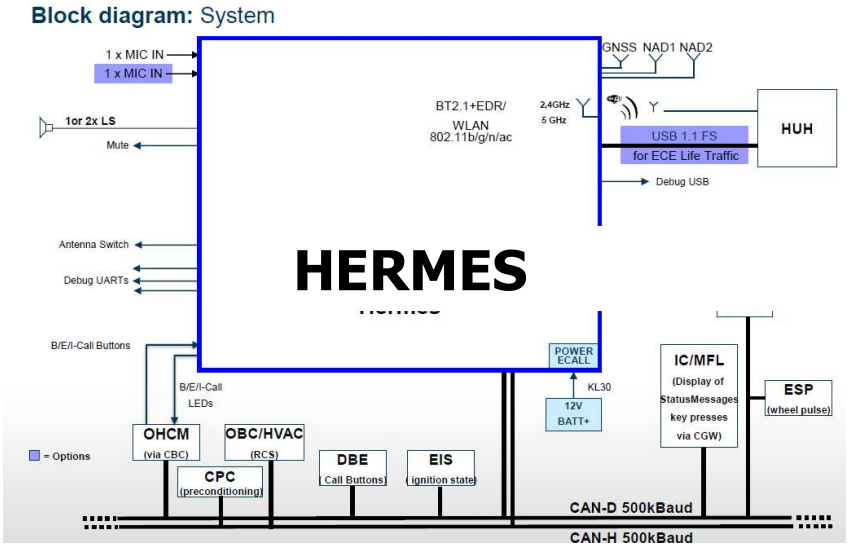

The network access will be realised by connecting a headunit over USB, BT or WLAN to the HERMES Pass4G unit. Regarding Bluetooth the unit only supports the Bluetooth DUN profile according IEEE 802.15. For WLAN connectivity it supports IEEE 802.11 a/b/g/n/ac. The HERMES unit can be configured either to support BT or WLAN or USB. It is not possible to use BT and WLAN at the same time. BT and WLAN are using the same pcb antenna. It is depending on the Daimler headunit how the connection will be established (over BT, WLAN or USB).

The E/R/I-Call is implemented in that way that after pressing one of these buttons the HERMES unit will dial a predefined number. These numbers are depending on the target markets.

Block diagram modules description:

- HUH: Head Unit High (main component of infotainment system)
- OHCM: Panel containing B/E/I-call buttons (for triggering a call) and corresponding LEDs (for call indication)
- CPC/OBC/HVAC: Components of the vehicle's air conditioning system
- DBE: Control panel to enter phone numbers
- EIS: Ignition state signalling
- IC: Instrument Cluster
- MFL: Control elements integrated into the steering wheel
- ORC: Airbag signalling
- ESP: Wheel pulse signalling

Interfacing of external components:

- HUH: WiFi connection for user data exchange (e.g. mobile internet)
- OHCM: Triggering and indication of E/R/I-call via discrete lines
- CPC/OBC/HVAC: Sending commands to vehicle's air conditioning system via CAN
- DBE: Receiving phone number input (for user call) via CAN
- EIS: Signalling of vehicle's ignition state via CAN
- IC: Displaying status messages (transmitted via CAN)
- MFL: Receiving control commands from MFL controls (e.g. hang-up call) via CAN
- ORC: Signalling of airbag activation via LIN or discrete line
- ESP: Receiving vehicle movement information (wheel pulse) via CAN (used for dead reckoning)

© HARMAN BECKER AUTOMOTIVE SYSTEMS GMBH
CONFIDENTIAL / ALL RIGHTS RESERVED

For Europe these predefined numbers are:

```
PSAP test number: +49731184990
Automatic E-Call Primary: +4970317020076
Automatic E-Call Secondary: +4970317020076
Manual E-Call Primary: +4970317020076
Manual E-Call Secondary: +4970317020076
R-Call Primary (V_SC_PHONENUM_RA): +4953170222606
R-Call Secondary (V_SC_PHONENUM_RA2): +4953170222606
I-Call Primary (V_SC_PHONENUM_ICALL): +40721278485
I-Call Secondary (V_SC_PHONENUM_ICALL2): +40215294590
```

To cover different target markets the HERMES unit provides different NAD-modules. Details regarding NAD modules you can find in chapter 3.1.7.

This HERMES provides different interfaces. For the car passenger there are only the E/R/I-Call buttons visible. To the car it is connected over CAN intervaces (CAN-D/CAN-H). Beside of that there are several UART and USB interfaces for debugging purpose.

For BT/WLAN functionality it uses one internal PCB antenna. For GSM/UMTS/LTE it has two HF antenna ports and one HF GNSS antenna port for GPS and Glonass.

3.1.2.1 HW-Features of the Hermes

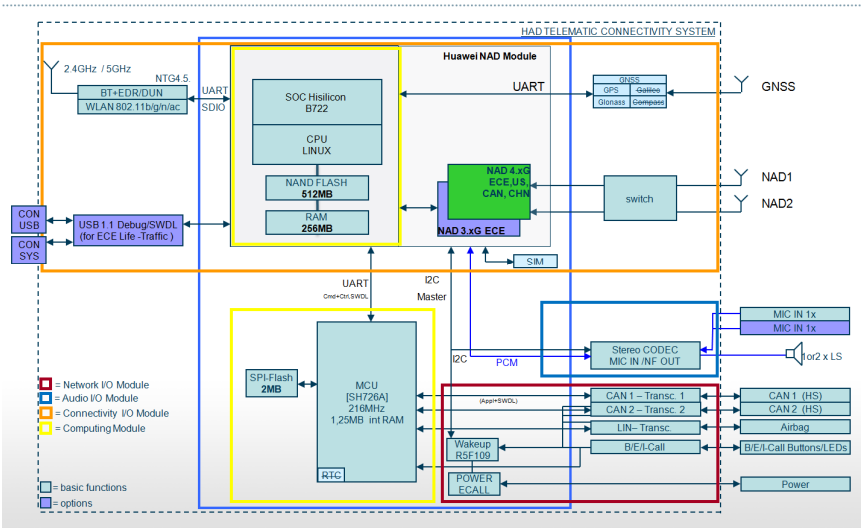

- Huawai Networ Access Device Module
  - ✓ SOC Hisilicon
  - ✓ Hi6932 (BB), Hi6559 (PMU), Hi6362 (RFIC)
  - ✓ NAND FLASH 512MB, RAM 256MB
- Main Controller
  - ✓ SH726A @ 216MHz
  - ✓ SPI Flash 2MB, RAM 1,25MB
- GPS, Glonass
- Audio:
  - ✓ stereo audio codec TLV320AIC3104
  - ✓ 10W class D power amplifier (for Ecall speaker)
  - ✓ Connection for up to two external microphones
- Huawai Networ Access Device Module
- Bluetooth according IEEE 802.15 (only DUN Profile supported)
- WLAN according IEEE 802.11 b/g/n/ac

3.1.3 Audio

The block diagram below shows the audio path:

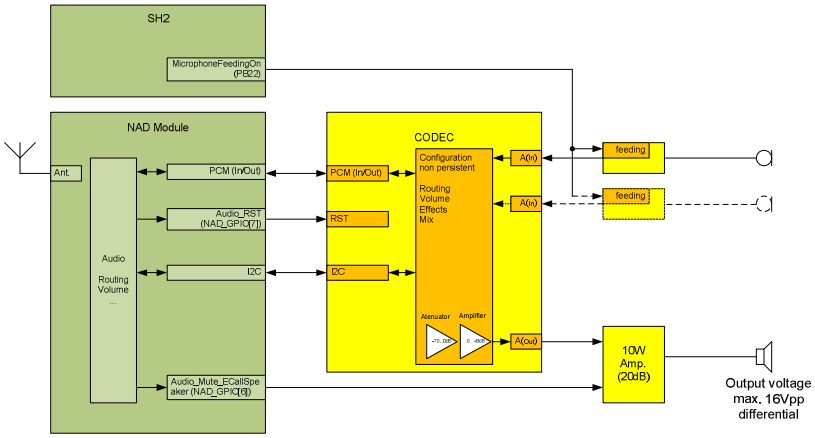

The HERMES provides the following audio connections:

- Microphone in (Connection for up to two external microphones (single ended)
- ECall Speaker output (Connection for an external eCall speaker 10W (differential))

It is possible to configure the microphone inputs as single ended or differential. For converting the analogue microphone lines and to feed the analogue power-amplifier it is necessary to have an AD-DA converter. The Hermes uses for this purpose the stereo Audio CODEC from TI

The following requirements have to be fulfilled and adjusted by the CODEC.

Digital Audio Interface:

- Bit Clock: 2.048MHz
- Sync: 8kHz
- Frame: Short frame
- Data format: 16Bit MSB first
- Mode: Slave

Line out:

- Type: differential
- Output level: 0,707Veff max

Microphone in:

- Type: single ended
- Input level: 0,707Veff max.
- Mic1R: Left channel, max. Gain
- Mic1L: Right channel, max. Gain

eCall speaker:

- 10W class D power amplifier. The amplifier is only used in case of an eCall.
- The audio downlink path from the NAD is directly connected to the power amplifier.

All settings have to be done via the I2C control interface. The TLV320AIC3104 supports the I2C control protocol using 7-bit addressing and is capable of both standard and fast modes.

© HARMAN BECKER AUTOMOTIVE SYSTEMS GMBH
CONFIDENTIAL / ALL RIGHTS RESERVED

3.1.4 Diagnosis

The Maincontroller of the HERMES is realised by a Renesas SH726B with 216MHz, 2MB Flash and 1,25MB RAM. In the following blockdiagram you can see the diagnosis ports from ant to the SH2 system controller.

3.1.4.1 Hermes

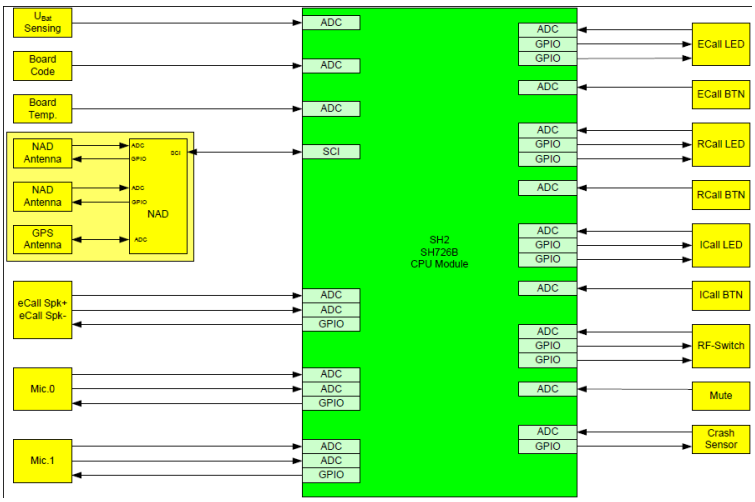

3.1.5 Operating States

The following picture shows the possible HERMES operating states – these are:
Full Sleep mode, Normal Power mode and DNO mode

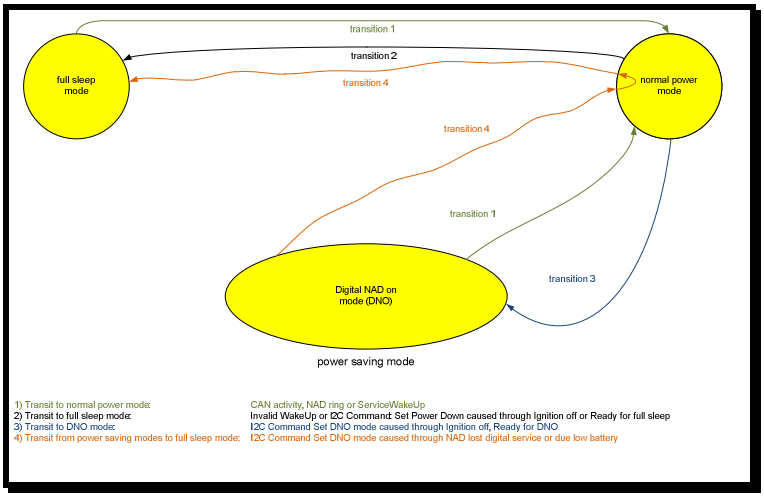

3.1.6 HW-clocking table

Device	Clock
NAD (Application Processor)	666MHz
SH2 (CAN Controller)	216MHz
RL78 (WakeUp Controller)	32MHz

3.1.7 WLAN Interface Hermes 2.0, 2.1

Hermes 2.0 does not support any Bluetooth. The WLAN solution of Hermes 2.x based on CWM-07/71 modules manufactured by WNC. CWM-07 and CWM-71 modules provide the same functionality are pin compatible but are base on different SoC. CWM-07 is based on Cypress SoC BCM89342 and CWM-71 on Cypress BCM89359. Both SoC have the same die but different packages.Therefore both modules use the same configuration files. Modules are calibrated during production and calibration process and data are stored in the internal OTP memory. There are two variant of CWM-07/71 modules, CWM-07/71-25 and CWM-07/71-2255. The table belowe provides mapping between Hermes's version, variants and used modules.

	Hermes 2.0	Hermes 2.1	Technology	Band Concurency
UMTS variant	CWM-07-25	CWM-71-25	SISO	No
LTE variant	CWM-07-2255	CWM-71-2255	MIMO	No

The table below shows the Block diagram of the CWM-Modules that are used in Hermes 2.x

HERMES 2.0	HERMES 2.1
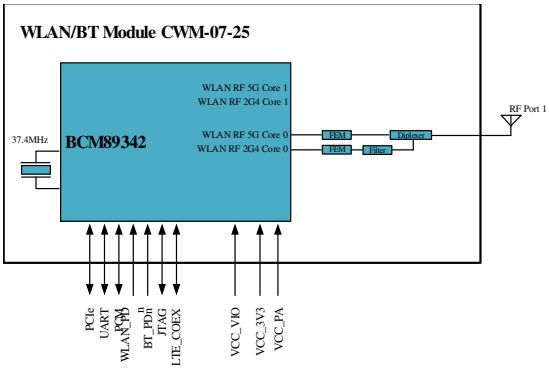	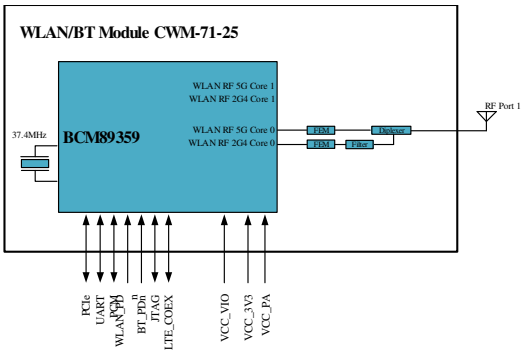
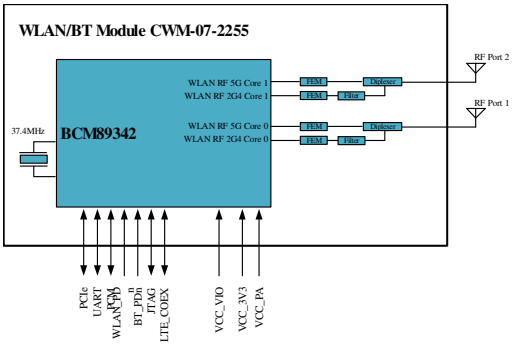	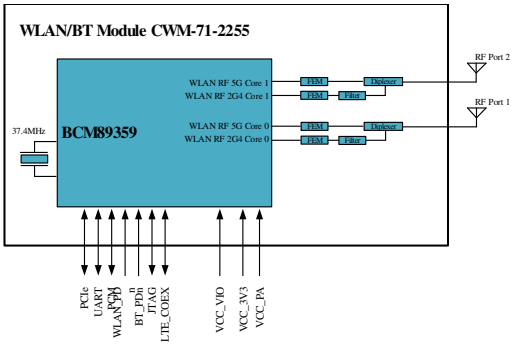

WLAN Parameter:

Supported standards:
802.11a data rates of 6, 9, 12, 18, 24, 36, 48, and 54 Mbps
802.11b data rates of 1, 2, 5.5 and 11 Mbps
802.11g data rates of 6, 9, 12, 18, 24, 36, 48, and 54 Mbps
802.11n data rates of MCS0 ~MCS7 HT20 and HT40
802.11ac data rates of MCS0 ~MCS9 HT20, HT40 and HT80
802.11e Quality of service (QoS)
802.11h transmit power control
No DFS support

Host Interface: PCIe

Frequenz: 2,401-2,4835 GHz; 5,160GHz - 5,835GHz
Modulation: BPSK, DBPSK, QPSK, DQPSK,
8PSK, 16QAM, 64QAM, 256QAM
Typical RF power: 15dBm ±2dBm

Antenna: internal PCB antenna
Antenna gain UMTS variant (RF port 1) :
2G4 band : 5,7 dBi
5G band : 4,0 dBi
Antenna gains LTE variant:
RF Port1: 2G4 band: 5,7 dBi; 5G band: 4,0 dBi
RF Port2: 2G4 band: 5,2 dBi; 5G band: 4,8 dBi

3.1.8 Connectors

The following picture shows the different Hermes connectors.

3.1.8.1 Hermes

LTE2 diversity antenna | LTE1 main antenna | GNSS | USB | Systemconnector

The pinning of the Systemconnector is as following:

1	2	3	4	5	6	7	8	9	10	11	12	13	14	15	16
17	18	19	20	21	22	23	24	25	26	27	28	29	30	31	32

Pin	I/O	Signalname	Description
1	I/O	CAN_BUS-H[1]	D-CAN High
2	I/O	CAN_BUS-L[1]	D-CAN Low
3	I	NAD_SCI_RX[Debug]	NAD-Debug Interface UART-RX (1,8V level)
4	O	NAD_SCI_TX[Debug]	NAD-Debug Interface UART-TX (1,8V level)
5	P	GND	NAD-Debug Interface USB-GND
6	O	ICall_LED	ICall-LED
7	O	RCall_LED	RCall-LED
8	O	ECall_LED	ECall-LED
9	I	SH2_SCI_RX[1]	SH2-Debug Interface UART-RX (3,3V level)
10	O	SH2_SCI_TX[1]	NAD-Debug Interface UART-TX (3,3V level)
11	I/O	LIN_BUS[0]	LIN Bus
12	O	Mute#	Signal to mute audio system
13	I	MicIn-[1]	Microphone 2 -
14	I	MicIn+[1]	Microphone 2 +
15	P	GND	Connection for shielding microphone lines
16	O	ECallSpeaker+	ECall Speaker -
17	I/O	CAN_BUS-H[0]	D-CAN High
18	I/O	CAN_BUS-L[0]	H-CAN Low
19	I	USB_VBUS[1]	NAD-Debug Interface USB-VBus
20	I/O	USB_DM[1]	NAD-Debug Interface USB-DM
21	I/O	USB_DP[1]	NAD-Debug Interface USB-DP
22	I	ICall_Btn#	ICall-Button
23	I	RCall_Btn#	RCall-Button
24	I	ECall_Btn#	ECall-Button
25	-	Not connected	reserved
26	P	GND	KL.31
27	P	KFZBat	KL.30
28	O	RF_Switch	Signal to control external RF-Switch
29	I	MicIn-[0]	Microphone 1 -
30	I	MicIn+[0]	Microphone 1 +
31	P	GND	Connection for shielding microphone lines
32	O	ECallSpeaker+	ECall Speaker +

© HARMAN BECKER AUTOMOTIVE SYSTEMS GMBH
CONFIDENTIAL / ALL RIGHTS RESERVED

3.1.9 Pictures Hermes

4 Declaration of Conformity (DoC in short form)

All language versions of the EU

4.1.1 English:

Hereby, Harman Becker Automotive Systems GmbH declares that the radio equipment type **HERMES 2.0** is in compliance with Directive 2014/53/EU. The full text of the EU declaration of conformity is available at the following internet Address: (*1)

4.1.2 Bulgarian:

С настоящото Harman Becker Automotive Systems GmbH декларира, че този тип радиосъоръжение **HERMES 2.0** е в съответствие с Директива 2014/53/ЕС. Цялостният текст на ЕС декларацията за съответствие може да се намери на следния интернет адрес: (*1)

4.1.3 Spanish:

Por la presente, Harman Becker Automotive Systems GmbH declara que el tipo de equipo radioeléctrico **HERMES 2.0** es conforme con la Directiva 2014/53/UE. El texto completo de la declaración UE de conformidad está disponible en la dirección Internet siguiente: (*1)

4.1.4 Czech:

Tímto Harman Becker Automotive Systems GmbH prohlašuje, že typ rádiového zařízení **HERMES 2.0** je v souladu se směrnicí 2014/53/EU. Úplné znění EU prohlášení o shodě je k dispozici na této internetové adrese: (*1)

4.1.5 Danish:

Hermed erklærer Harman Becker Automotive Systems GmbH, at radioudstyrstypen **HERMES 2.0** er i overensstemmelse med direktiv 2014/53/EU. EU-overensstemmelseserklæringens fulde tekst kan findes på følgende internetadresse: (*1)

4.1.6 German:

Hiermit erklärt Harman Becker Automotive Systems GmbH, dass das Gerät mit Funkfunktion **HERMES 2.0** der Richtlinie 2014/53/EU entspricht. Der vollständige Text der EU-Konformitätserklärung ist unter der folgenden Internetadresse verfügbar: (*1)

© HARMAN BECKER AUTOMOTIVE SYSTEMS GMBH
CONFIDENTIAL / ALL RIGHTS RESERVED

4.1.7 Estonian:

Käesolevaga deklareerib Harman Becker Automotive Systems GmbH, et käesolev raadioseadme tüüp **HERMES 2.0** vastab direktiivi 2014/53/EL nõuetele. ELi vastavusdeklaratsiooni täielik tekst on kättesaadav järgmisel internetiaadressil: (*1)

4.1.8 Greek:

Με την παρούσα ο/η Harman Becker Automotive Systems GmbH, δηλώνει ότι ο ραδιοεξοπλισμός **HERMES 2.0** πληροί την οδηγία 2014/53/ΕΕ. Το πλήρες κείμενο της δήλωσης συμμόρφωσης ΕΕ διατίθεται στην ακόλουθη ιστοσελίδα στο διαδίκτυο: (*1)

4.1.9 French:

Le soussigné, Harman Becker Automotive Systems GmbH, déclare que l'équipement radioélectrique du type **HERMES 2.0** est conforme à la directive 2014/53/UE. Le texte complet de la déclaration UE de conformité est disponible à l'adresse internet suivante: (*1)

4.1.10 Croatian:

Harman Becker Automotive Systems GmbH ovime izjavljuje da je radijska oprema tipa **HERMES 2.0** u skladu s Direktivom 2014/53/EU. Cjeloviti tekst EU izjave o sukladnosti dostupan je na sljedećoj internetskoj adresi: (*1)

4.1.11 Italian:

Il fabbricante, Harman Becker Automotive Systems GmbH, dichiara che il tipo di apparecchiatura radio **HERMES 2.0** è conforme alla direttiva 2014/53/UE. Il testo completo della dichiarazione di conformità UE è disponibile al seguente indirizzo Internet: (*1)

4.1.12 Latvian:

Ar šo Harman Becker Automotive Systems GmbH deklarē, ka radioiekārta **HERMES 2.0** atbilst Direktīvai 2014/53/ES. Pilns ES atbilstības deklarācijas teksts ir pieejams šādā interneta vietnē: (*1)

4.1.13 Lithuanian:

Aš, Harman Becker Automotive Systems GmbH, patvirtinu, kad radijo įrenginių tipas **HERMES 2.0** atitinka Direktyvą 2014/53/ES. Visas ES atitikties deklaracijos tekstas prieinamas šiuo interneto adresu: (*1)

4.1.14 Hungarian:

Harman Becker Automotive Systems GmbH igazolja, hogy a **HERMES 2.0** típusú rádióberendezés megfelel a 2014/53/EU irányelvnek. Az EU-megfelelőségi nyilatkozat teljes

© HARMAN BECKER AUTOMOTIVE SYSTEMS GMBH
CONFIDENTIAL / ALL RIGHTS RESERVED

szövege elérhető a következő internetes címen: 2014.5.22. L 153/104 Az Európai Unió Hivatalos Lapja HU: (*1)

4.1.15 Maltese:

B'dan, Harman Becker Automotive Systems GmbH, niddikjara li dan it-tip ta' tagħmir tar-radju **HERMES 2.0** huwa konformi mad-Direttiva 2014/53/UE. It-test kollu tad-dikjarazzjoni ta' konformità tal-UE huwa disponibbli f'dan l-indirizz tal-Internet li ġej: (*1)

4.1.16 Dutch:

Hierbij verklaar ik, Harman Becker Automotive Systems GmbH, dat het type radioapparatuur **HERMES 2.0** conform is met Richtlijn 2014/53/EU. De volledige tekst van de EU-conformiteitsverklaring kan worden geraadpleegd op het volgende internetadres: (*1)

4.1.17 Polish:

Harman Becker Automotive Systems GmbH niniejszym oświadcza, że typ urządzenia radiowego **HERMES 2.0** jest zgodny z dyrektywą 2014/53/UE. Pełny tekst deklaracji zgodności UE jest dostępny pod następującym adresem internetowym: (*1)

4.1.18 Portuguese:

O(a) abaixo assinado(a) Harman Becker Automotive Systems GmbH declara que o presente tipo de equipamento de rádio **HERMES 2.0** está em conformidade com a Diretiva 2014/53/UE. O texto integral da declaração de conformidade está disponível no seguinte endereço de Internet: (*1)

4.1.19 Romanian:

Prin prezenta, Harman Becker Automotive Systems GmbH declară că tipul de echipamente radio **HERMES 2.0** este în conformitate cu Directiva 2014/53/UE. Textul integral al declarației UE de conformitate este disponibil la următoarea adresă internet: (*1)

4.1.20 Slovak:

Harman Becker Automotive Systems GmbH týmto vyhlasuje, že rádiové zariadenie typu **HERMES 2.0** je v súlade so smernicou 2014/53/EÚ. Úplné EÚ vyhlásenie o zhode je k dispozícii na tejto internetovej adrese: (*1)

4.1.21 Slovenian:

Harman Becker Automotive Systems GmbH potrjuje, da je tip radijske opreme **HERMES 2.0** skladen z Direktivo 2014/53/EU. Celotno besedilo izjave EU o skladnosti je na voljo na naslednjem spletnem naslovu: (*1)

© HARMAN BECKER AUTOMOTIVE SYSTEMS GMBH
CONFIDENTIAL / ALL RIGHTS RESERVED

4.1.22 Finnish:

Harman Becker Automotive Systems GmbH vakuuttaa, että radiolaitetyyppi **HERMES 2.0** on direktiivin 2014/53/EU mukainen. EU-vaatimustenmukaisuusvakuutuksen täysimittainen teksti on saatavilla seuraavassa internetosoitteessa: (*1)

4.1.23 Swedish:

Härmed försäkrar Harman Becker Automotive Systems GmbH att denna typ av radioutrustning HERMES 2.0 överensstämmer med direktiv 2014/53/EU. Den fullständiga texten till EU-försäkran om överensstämmelse finns på följande webbadress: (*1)

Overview of technical radio values (ECE variant)

Bluetooth:	2400-2483,5 MHz	<10 dBm
WLAN:	2400-2483,5 MHz	<20 dBm
WLAN:	5736-5833 MHz	<14 dBm
GSM:	EGSM900, Class 4	<(+33dBm ± 2dB)
GSM:	EGSM1800, Class 1	<(+30dBm ± 2dB)
GSM:	EGSM 900 8-PSK, Class E2	<(+27dBm ± 3dB)
GSM:	EGSM 1800 8-PSK, Class E2	<(+26dBm ± 3dB / -4dB)
UMTS 2100:	WCDMA FDD B 1, Class 3	<(+24dBm ± 1dB / -3dB)
LTE:	FDD B I, Class3	<(+23dBm ± 2dB)
LTE:	FDD B III, Class3	<(+23dBm ± 2dB)
LTE:	TDD B38, Class3	<(+23dBm ± 2dB)
LTE:	TDD B39, Class3	<(+23dBm ± 2dB)
LTE:	TDD B40, Class3	<(+23dBm ± 2dB)
LTE:	TDD B41, Class3	<(+23dBm ± 2dB)

(*1) http://www.harman.com/compliance

Manufacturer:

Harman Becker Automotive Systems GmbH
Becker-Goering-Strasse 16
76307 Karlsbad,
Germany

5 FCC Compliance statement, USA

Federal Communications Commission (FCC) Compliance Statement – United States

This device complies with Part 15 of the FCC Rules. Operation is subject to the following two conditions:

(1) This device may not cause harmful interference, and

(2) the device must accept any interference received, including interference that may cause undesired operation.

Caution – FCC Warning:
Changes or modifications not expressly approved by the party, responsible for compliance, could void the user's authority to operate the equipment.

RF Exposure Requirements
To comply with FCC RF exposure compliance requirements, the device must be installed to provide a separation distance of at least 20 cm from all persons.

6 ISED Compliance statement, Canada

ISED - Canada Compliance Statement

This digital apparatus complies with DHHS rules21 CFR.
Subchapter J applicable to the date of manufacture.

This device complies with ISED Canada's license-exempt RSSs. Operation is subject to the following two conditions:

(1) This device may not cause interference; and
(2) This device must accept any interference, including interference that may cause undesired operation of the device.

Le présent appareil est conforme aux ISED applicables aux appareils radio exempts de licence. L'exploitation est autorisée aux deux conditions suivantes:
(1) l'appareil ne doit pas produire de brouillage, et
(2) l'utilisateur de l'appareil doit accepter tout brouillage radioélectrique subi, même si le brouillage est susceptible d'en compromettre le fonctionnement.

© HARMAN BECKER AUTOMOTIVE SYSTEMS GMBH
CONFIDENTIAL / ALL RIGHTS RESERVED