DEKRA Certification, Inc.
405 Glenn Dr. Suite 12,
Sterling, VA 20164
United States of America

FCC LISTED, REGISTRATION NUMBER: 2764.01

ISED LISTED REGISTRATION NUMBER: 23595-1

Test report No:

3669ERM.010

DFS Test report

USA FCC Part 15.407 (U-NIII)
CANADA RSS - 247
Unlicensed National Information Infrastructure Devices Operating in the 5250-5350 MHz and 5470 – 5725 MHz Bands incorporating Dynamic Frequency Selection

(*) Identification of item tested	Infotainment Head Unit
(*) Trademark	BMW
(*) Model and /or type reference	IDC23H
(*) Other identification of the product	FCC ID: T8GIDC23H IC:6434A-IDC23H
(*) Features	Bluetooth classic; BLE; Wi-Fi 2.4GHz; Wi-Fi 5GHz; GNSS
Manufacturer	HARMAN BECKER AUTOMOTIVE SYSTEMS GMBH Becker-Goering-Str. 16 76307, Karlsbad, GERMANY
Test method requested, standard	USA FCC Part 15.407 10-1-20 Edition: Unlicensed National Information Infrastructure Devices. General technical requirements. Canada RSS-247 Issue 2 (February 2017) 905462 D02 UNII DFS Compliance Procedures New rules V02. Compliance Measurement procedures for Unlicensed National Information Infrastructure (U-NII) Devices operating in the 5250 – 5350 MHz and 5470-5725 MHz bands incorporating Dynamic Frequency selection
Summary	IN COMPLIANCE
Approved by (name / position & signature)	Domingo Galvez EMC&RF Lab Manager Digitally signed by Domingo Galvez DN: cn=Domingo Galvez, o=DEKRA Certification Inc., ou=Regulatory Lab, email=dgalvez@dekra.com, c=US
Date of issue	02-08-2023
Report template No	FDT08_23 (*) “Data provided by the client”

Index

Competences and guarantees 3
General conditions 3
Uncertainty 3
Data provided by the client 3
Usage of samples 4
Test sample description 5
Identification of the client 6
Testing period and place 7
Document history 7
Environmental conditions 7
Remarks and comments 7
Testing verdicts 8
Summary 8
List of equipment used during the test 9
U-NII DFS RULE REQUIREMENTS 10
U-NII DFS Test Setup 14
Appendix A: DUT Description 16
Appendix B: Test results 18

Competences and guarantees

DEKRA Certification Inc. is a testing laboratory accredited by A2LA (The American Association for Laboratory Accreditation), to perform the tests indicated in the Certificate 2764.01

DEKRA Certification Inc. is a testing laboratory competent to carry out the tests described in this report.

In order to assure the traceability to other national and international laboratories, DEKRA Certification Inc. has a calibration and maintenance program for its measurement equipment.

DEKRA Certification Inc. guarantees the reliability of the data presented in this report, which is the result of the measurements and the tests performed to the item under test on the date and under the conditions stated on the report and, it is based on the knowledge and technical facilities available at DEKRA Certification at the time of performance of the test.

DEKRA Certification Inc. is liable to the client for the maintenance of the confidentiality of all information related to the item under test and the results of the test.

The results presented in this Test Report apply only to the particular item under test established in this document.

IMPORTANT: No parts of this report may be reproduced or quoted out of context, in any form or by any means, except in full, without the previous written permission of DEKRA Certification Inc.

General conditions

1. This report is only referred to the item that has undergone the test.
2. This report does not constitute or imply on its own an approval of the product by the Certification Bodies or competent Authorities.
3. This document is only valid if complete; no partial reproduction can be made without previous written permission of DEKRA Certification Inc.
4. This test report cannot be used partially or in full for publicity and/or promotional purposes without previous written permission of DEKRA Certification Inc. and the Accreditation Bodies.

Uncertainty

Uncertainty (factor k=2) was calculated according to the DEKRA Certification internal document PODT000.

Frequency (MHz)	U(k=2)	Units
30-180	4.27	dB
180-1000	3.14	dB
1000-18000	3.30	dB
18000-40000	3.49	dB

Data provided by the client

The main functionalities are Navigation, USB, voice recognition and several interfaces to the vehicle and Bluetooth / WLAN. The Head-unit provides different interfaces like: AR-CAM input, Video-out APIX3 (for the connection of an external Display), 3 USB interfaces.

DEKRA declines any responsibility with respect to the information provided by the client and that may affect the validity of results.

Usage of samples

Samples used for test have been selected by: The client.

Sample S/01 is composed of the following elements:

Control Nº	Description	Model	Serial Nº	Date of reception
3669/02	Harman IDC23H DFS sample	IDC23 High 8155	B44439N035900007	4/7/2022

Sample S/01 is composed of the following accessories:

Control Nº	Description	Model	Serial Nº	Date of reception
3669/37	BR-Adapter	--	--	4/7/2022
3669/05	Harness	--	--	4/7/2022
3669/11	BT/WLAN Antenna with SMA (male) connector	--	--	4/7/2022
3669/09	Quad mate AXZ - High speed Fakra to SMA (male)	--	--	4/7/2022
3669/44	Ethernet to USB Adapter	UE300	220B191005905	4/7/2022

1. Sample S/01 was used for the following test(s):

   All conducted tests indicated in appendix B.

Test sample description

Ports…….. :	Port name and description	Cable		
		Specified length [m]	Attached during test	Shielded
	BT/Wi-Fi Antenna	2	☒	☐
	USB1/2/3	2	☒	☐
	Power	2	☒	☐
	CID	2	☒	☐
	AR-Cam	2	☒	☐
	100 Base T1/1G Base T1/GPS	2	☒	☐
Supplementary information to the ports……:	No Data Provided			

Rated power supply .....:	Voltage and Frequency	Reference poles				
		L1	L2	L3	N	PE
	☐ AC:	☐	☐	☐	☐	☐
	☐ AC:	☐	☐	☐	☐	☐
	☒ DC: 8V to 16V					
	☐ DC:					

Rated Power .....:	No Data Provided
Clock frequencies .....:	No Data Provided
Other parameters.....:	No Data Provided
Software version .....:	22w05.3-1-21
Hardware version.....:	5.1.5
Dimensions in cm (W x H x D)....:	No Data Provided
Mounting position.....:	☐ *Tabletop equipment*
	☐ *Wall/Ceiling mounted equipment*
	☐ *Floor standing equipment*
	☐ *Hand-held equipment*
	☒ *Other: Vehicle / Automotive use*

Modules/parts .....:	Module/parts of test item	Type	Manufacturer
	No Data Provided		

Accessories (not part of the test item) .....:	Description	Type	Manufacturer
	No Data Provided		

Documents as provided by the applicant.....:	Description	File name	Issue date
	Declaration Equipment Data	FDT30_18 Declaration Equipment Data IDC23_8155_20220318	04/01/2022

Copy of marking plate:

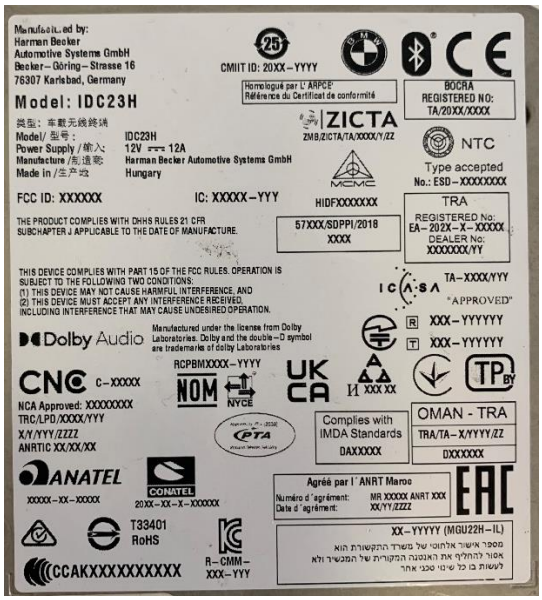

Identification of the client

HARMAN BECKER AUTOMOTIVE SYSTEMS GMBH
Becker-Goering-Str. 16
76307, Karlsbad, GERMANY.

Testing period and place

Test Location	DEKRA Certification Inc.
Date (start)	05-29-2022
Date (finish)	07-12-2022

Document history

Report number	Date	Description
3669ERM.007	02-08-2023	First release

Environmental conditions

In the control chamber, the following limits were not exceeded during the test:

Temperature	Min. = 15 ºC Max. = 35 ºC
Relative humidity	Min. = 30 % Max. = 75 %
Air pressure	Min. = 860 mbar Max. = 1060 mbar

In the semi-anechoic chamber, the following limits were not exceeded during the test.

Temperature	Min. = 15 ºC Max. = 35 ºC
Relative humidity	Min. = 30 % Max. = 75 %
Air pressure	Min. = 860 mbar Max. = 1060 mbar

In the chamber for conducted measurements, the following limits were not exceeded during the test:

Temperature	Min. = 15 ºC Max. = 35 ºC
Relative humidity	Min. = 30 % Max. = 60 %
Air pressure	Min. = 860 mbar Max. = 1060 mbar

Remarks and comments

The tests have been performed by the technical personnel: Sravani Gollamudi and Koji Nishimoto.

Testing verdicts

Not applicable :	N/A
Pass :	P
Fail :	F
Not measured :	N/M

Summary

FCC PART 15 PARAGRAPH / RSS-247 (WIFI 5GHz) 5.25 GHz -5.35 GHz and 5.47 GHz -5.725 GHz Band						
Report Section	**15.407 Spec Clause**	**RSS Spec Clause**	**Test**	**Test Description**	**Verdict**	**Remark**
B.1 & B.2	§ 15.407 (h) (2) & 7.8.1	RSS 247 6.3	DFS Detection Threshold	UNII Detection Bandwidth	P	N/A
B.3	§ 15.407 (h) (2)(ii) & 7.8.2	RSS 247 6.3	Performance Requirements Check	Initial Channel Availability Check Time (CAC)	P	N/A
				Radar Burst at the Beginning of the CAC	P	N/A
				Radar Burst at the End of the CAC	P	N/A
B.4	§ 15.407 (h) (2)(iii)(iv) & 7.8.3	RSS 247 6.3	In-Service Monitoring	Channel Move Time	P	N/A
				Channel Closing Transmission Time	P	N/A
				Non-Occupancy Period	P	N/A
B.5	7.8.4	RSS 247 6.3	Radar Detection	Statistical Performance Check	P	N/A
Supplementary information and remarks: None.						

Antenna Category and general information:
☐ Integral Antenna (information to be provided in case of conducted measurements) Antenna Gain: dBi If applicable, additional beamforming gain (excluding basic antenna gain):..... ☐Equipment with only one antenna ☐ Equipment with two diversity antennas but only one antenna active at any moment in time ☒ Smart Antenna Systems with two or more antennas, but operating in a (legacy) mode w where only one antenna is used (e.g. IEEE 802.11™ [i.3] legacy mode in smart antenna systems) ☒ Temporary RF connector provided ☐ No temporary RF connector provided ☒ Dedicated Antennas (equipment with antenna connector) Antenna Gain: ....-2.8..... dBi ☐ For radiated tests, the DFS test should be performed with lowest antenna gain (regardless of antenna type). Then Ant. No. shall be performed the radiated DFS test. ☒ For conducted tests, antenna ports are used for the tests and Master lowest antenna gain [0] dBi that was used to set the DFS Detection Threshold level during calibration of the test setup.

List of equipment used during the test

Conducted Measurements

Test system Rohde & Schwarz TS 8997:

CONTROL NUMBER	DESCRIPTION	MANUFACTURER	MODEL	LAST CALIBRATION	NEXT CALIBRATION
1039	Signal Analyzer	ROHDE & SCHWARZ	FSV40	2020/09	2022/09
1447	OSP Switch Unit	ROHDE & SCHWARZ	OSPB157W	2022/06	2024/06
1041	RF generator	ROHDE & SCHWARZ	SMB100A	2020/07	2022/07
1042	RF generator	ROHDE & SCHWARZ	SMBV100A	2022/03	2024/03

Note: This device was functioned as a ☒ Master ☐ Slave device during the DFS test

U-NII DFS RULE REQUIREMENTS

WORKING MODES AND REQUIRED TEST ITEMS

The manufacturer shall state whether the EUT can operate as a Master and/or a Client. If the EUT can operate in more than one operating mode, then each operating mode shall be tested separately. See tables 1 and 2 for the applicability of DFS requirements for each of the operational modes.

Table 1: Applicability of DFS Requirements Prior to Use of a Channel

Requirement	DFS Operational mode		
	Master	Client without radar detection	Client with radar detection
Non-Occupancy Period	Yes	Not required	Yes
DFS Detection Threshold	Yes	Not required	Yes
Channel Availability Check Time	Yes	Not required	Not required
U-NII Detection Bandwidth	Yes	Not required	Yes

Table 2: Applicability of DFS reuqirements during normal operation

Requirement	Operational Mode	
	Master Device or Client with Radar Detection	Client Without Radar Detection
DFS Detection Threshold	Yes	Not required
Channel Closing Transmission Time	Yes	Yes
Channel Move Time	Yes	Yes
U-NII Detection Bandwidth	Yes	Not required

Additional requirements for devices with multiple bandwidth modes	Master Device or Client with Radar Detection	Client Without Radar Detection
U-NII Detection Bandwidth and Statistical Performance Check	All BW modes must be tested	Not required
Channel Move Time and Channel Closing Transmission Time	Test using widest BW mode available	Test using the widest BW mode available for the link
All other tests	Any single BW mode	Not required
Note: Frequencies selected for statistical performance check (Section 7.8.4) should include several frequencies within the radar detection bandwidth and frequencies near the edge of the radar detection bandwidth. For 802.11 devices it is suggested to select frequencies in each of the bonded 20 MHz channels and the channel center frequency.		

TEST LIMITS AND RADAR SIGNAL PARAMETERS

- DFS DETECTION THRESHOLDS FOR MASTER DEVICES AND CLIENT DEVICES WITH RADAR DETECTION

Maximum Transmit Power EIRP	Value (see note)
≥ 200 mW	-64 dBm
< 200 mW and power spectral density < 10 dBm/MHz	-62 dBm
< 200 mW and That do not meet the power spectral density < 10 dBm/MHz	-64 dBm
Note 1: This is the level at the input of the receiver assuming a 0 dBi receive antenna. Note 2: Throughout these test procedures an additional 1 dB has been added to the amplitude of the test transmission waveforms to account for variations in measurement equipment. This will ensure that the test signal is at or above the detection threshold level to trigger a DFS response. Note3: EIRP is based on the highest antenna gain. For MIMO devices refer to KDB Publication 662911 D01.	

- DFS RESPONSE REQUIREMENT VALUES

Parameter	Value
Non-occupancy period	minimum 30 minutes
Channel Availability Check Time	60 seconds
Channel Move Time	10 seconds See Note 1.
Channel Closing Transmission Time	200 milliseconds + an aggregate of 60 milliseconds over remaining 10 second period. See Notes 1 and 2.
U-NII Detection Bandwidth	Minimum 100% of the U-NII 99% transmission power bandwidth. See Note 3.
Note 1: Channel Move Time and the Channel Closing Transmission Time should be performed with Radar Type 0. The measurement timing begins at the end of the Radar Type 0 burst. Note 2: The Channel Closing Transmission Time is comprised of 200 milliseconds starting at the beginning of the Channel Move Time plus any additional intermittent control signals required to facilitate a Channel move (an aggregate of 60 milliseconds) during the remainder of the 10 second period. The aggregate duration of control signals will not count quiet periods in between transmissions. Note 3: During the U-NII Detection Bandwidth detection test, radar type 0 should be used. For each frequency step the minimum percentage of detection is 90 percent. Measurements are performed with no data traffic.	

- RADAR TEST WAVEFORMS
  - Short Pulse Radar Test Waveforms:

Radar Type	Pulse Width (µsec)	PRI (µsec)	Number of Pulses	Minimum Percentage of Successful Detection	Minimum Number of Trials
0	1	1428	18	See Note 1	See Note 1
1	1	Test A: 15 unique PRI values randomly selected from the list of 23 PRI values in Table 5a	Roundup $\left\{\left(\frac{1}{360}\right)\cdot\left(\frac{19\cdot 10^6}{PRI_{\mu sec}}\right)\right\}$	60%	30
		Test B: 15 unique PRI values randomly selected within the range of 518-3066 µsec, with a minimum increment of 1 µsec, excluding PRI values selected in Test A			
2	1-5	150-230	23-29	60%	30
3	6-10	200-500	16-18	60%	30
4	11-20	200-500	12-16	60%	30
Aggregate (Radar Types 1-4)				80%	120
Note 1: Short Pulse Radar Type 0 should be used for the detection bandwidth test, channel move time, and channel closing time tests.					

A minimum of 30 unique waveforms for each of the Short Pulse Radar Types 2 through 4.

  - Pulse Repetition Intervals Values for Test A

Pulse Repetition Frequency Number	Pulse Repetition Frequency (Pulses Per Second)	Pulse Repetition Interval (Microseconds)
1	1930.5	518
2	1858.7	538
3	1792.1	558
4	1730.1	578
5	1672.2	598
6	1618.1	618
7	1567.4	638
8	1519.8	658
9	1474.9	678
10	1432.7	698
11	1392.8	718
12	1355	738
13	1319.3	758
14	1285.3	778
15	1253.1	798
16	1222.5	818
17	1193.3	838
18	1165.6	858
19	1139	878
20	1113.6	898
21	1089.3	918
22	1066.1	938
23	326.2	3066

- Long Pulse Radar Test Waveform

Radar Type	Pulse Width (µsec)	Chirp Width (MHz)	PRI (µsec)	Number of Pulses per Burst	Number of Bursts	Minimum Percentage of Successful Detection	Minimum Number of Trails
5	50-100	5-20	1000-2000	1-3	8-20	80%	30

The parameters for this waveform are randomly chosen. Thirty unique waveforms are required for the Long Pulse Radar Type Waveforms.

- Frequency Hopping Radar Test Waveform

Radar Type	Pulse Width (µsec)	Chirp Width (MHz)	Pulses per Hop	Hopping Rate (kHz)	Hopping Sequence Length (msec)	Minimum Percentage of Successful Detection	Minimum Number of Trails
6	1	333	9	0.333	300	70%	30

For the Frequency Hopping Radar Type, the same Burst parameters are used for each waveform. The hopping sequence is different for each waveform and a 100-length segment is selected from the hopping sequence defined.

The first frequency in a hopping sequence is selected randomly from the group of 475 integer frequencies from 5250 – 5724 MHz Next, the frequency that was just chosen is removed from the group and a frequency is randomly selected from the remaining 474 frequencies in the group. This process continues until all 475 frequencies are chosen for the set.

U-NII DFS Test Setup

- <u>Setup Configuration of EUT (Conducted)</u>

Setup for Master with injection at the Master

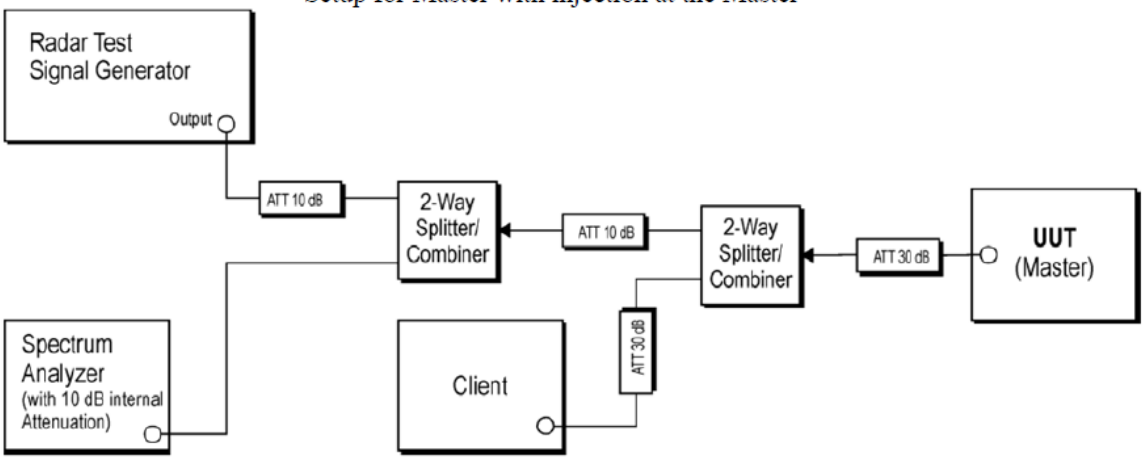

Setup for Client with injection at the Master

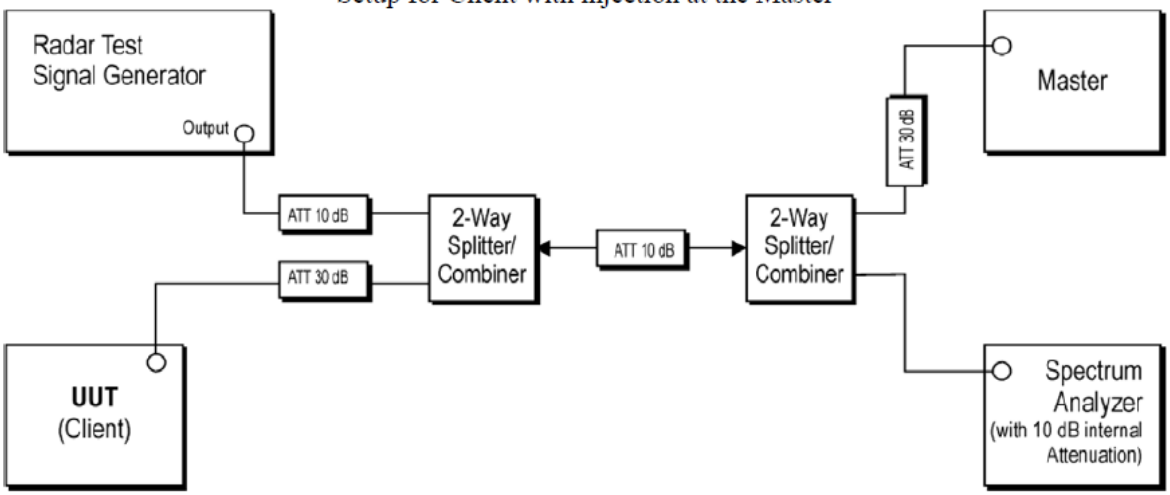

Setup for Client with injection at the Client

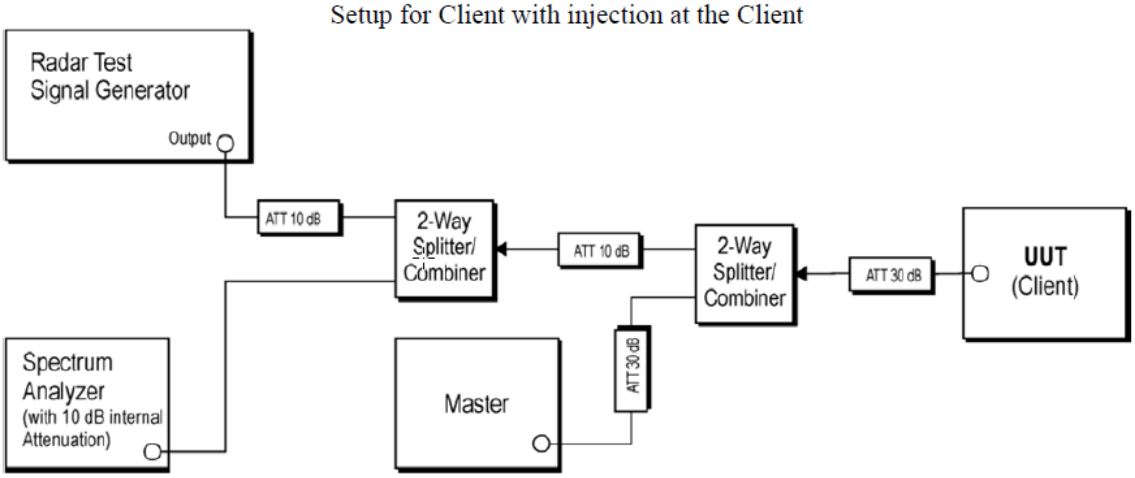

- Setup Configuration of TS8997 (Conducted)

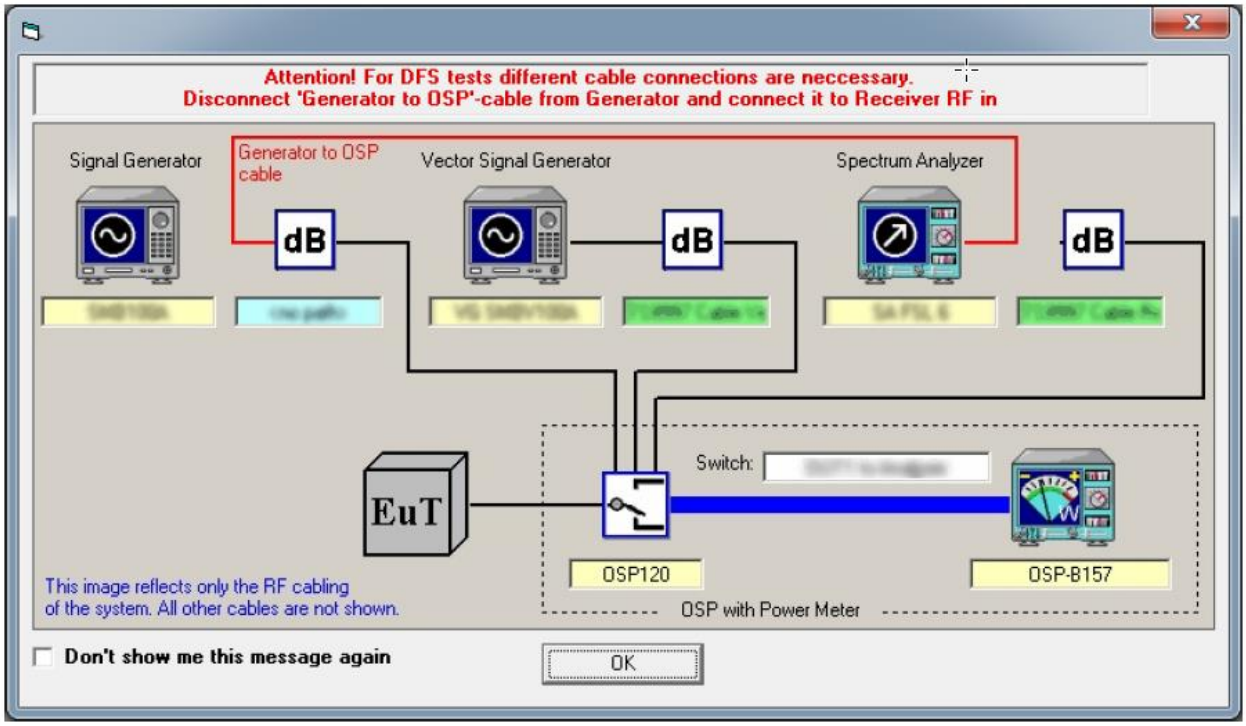

- Channel Loading

System testing will be performed with channel-loading using means appropriate to the data types that are used by the unlicensed device. The following requirements apply:

a)	The data file must be of a type that is typical for the device (i.e., MPEG-2, MPEG-4, WAV, MP3, MP4, AVI, etc.) and must generally be transmitting in a streaming mode.	☐
b)	Software to ping the client is permitted to simulate data transfer but must have random ping intervals.	☒
c)	Timing plots are required with calculations demonstrating a minimum channel loading of approximately 17% or greater.	☒
d)	Unicast or Multicast protocols are preferable but other protocols may be used. The appropriate protocol used must be described in the test procedures.	☐

Appendix A: DUT Description

DUT Description

The following information is provided by the client

Information	Description
Equipment type	WIFI 5GHz/2.4 GHz + BT BR/EDR/LE
DFS Operating Mode	Master
TPC Function	Yes
Antenna Supported	Equipment with two antennas (1/4 wave coax)
- Operating Frequency Range	5250 - 5350 MHz / 5470 -5725 MHz
- Nominal Channel Bandwidth	20/ 40/ 80 MHz
Antenna type	Dedicated antenna (Multiple)
Antenna gain	-2.8 dBi
Supply Voltage	12 Vdc
Max EIRP:	<u>Range: 5250-5350 MHz</u> 802.11a : 9.70 dBm 802.11n20: 11.00 dBm 802.11n40: 7.60 dBm 802.11ac20: 11.70 dBm 802.11ac40: 8.00 dBm 802.11ac80: 6.20 dBm 802.11ax20 : 8.40 dBm 802.11ax40 : 8.40 dBm 802.11ax80 : 8.50 dBm <u>Range: 5470-5725 MHz</u> 802.11a : 9.60 dBm 802.11n20: 8.20 dBm 802.11n40: 8.20 dBm 802.11ac20: 9.50 dBm 802.11ac40: 7.50 dBm 802.11ac80: 7.40 dBm 802.11ax20 : 8.90 dBm 802.11ax40 : 7.40 dBm 802.11ax80 : 9.50 dBm
Modulation:	OFDM (QPSK, BPSK,16QAM,64QAM,256QAM)
Communication Mode:	IP Based (Load Based)
Transmit Data Rate:	802 .11 a/n/ac/ax Rates: IEEE 802.11a: 6, 9, 12, 18, 24, 36, 48, 54 Mbps IEEE 802.11n: MCS0-7 IEEE 802.11ac: VHT_SS1_MCS 0-11 VHT_SS2_MCS 0-11 IEEE 802.11ax: HE_SS1_MCS 0-11 HE_SS2_MCS 0-11

1. TPC not required if Max EIRP < 500mW (27 dBm)

Appendix B: Test results

Appendix B Content

DESCRIPTION OF TEST CONDITIONS 20
TEST B.1: DFS: DETECTION THRESHOLD 21
TEST B.2: DFS: UNII DETECTION BANDWIDTH 23
TEST B.3: DFS: CHANNEL AVAILABILITY CHECK 30
TEST B.4: DFS: IN-SERVICE MONITORING 38
TEST B.5: DFS: STATISTICAL PERFORMANCE CHECK 44

DESCRIPTION OF TEST CONDITIONS

TEST CONDITIONS	DESCRIPTION
TC#01[(1)] **(ac mode)**	Power supply (V): $V_{nominal}$ = 12 Vdc Channel Bandwidth: 20 MHz Test Frequencies for Conducted tests: (Radio A+B) UNII 2A: CH 52: 5260 MHz CH 56: 5280 MHz CH 64: 5320 MHz UNII 2C: CH 100: 5500 MHz CH 116: 5580 MHz CH 140: 5700 MHz Channel Bandwidth:40 MHz Test Frequencies for Conducted tests: (Radio A+B) UNII 2A: CH 54: 5270 MHz CH 62: 5310 MHz UNII 2C: CH 102: 5510 MHz CH 110: 5550 MHz CH 134: 5670 MHz Channel Bandwidth: 80 MHz Test Frequencies for Conducted tests: (Radio A+B) UNII 2A: UNII 2C: CH 58: 5290 MHz CH 106: 5530 MHz

Note 1: Modulation modes consist of below configuration:

11a: IEEE 802.11a, HT20/HT40: IEEE 802.11n, VHT20/VHT40/VHT80: IEEE 802.11ac and HE20/HE40/HE80: IEEE 802.11ax. The worst case mode for DFS tests consists of ac mode VHT20/VHT40/VHT80

TEST B.1: DFS: DETECTION THRESHOLD

LIMITS:	Product standard:	Part 15 Subpart C §15.407, RSS-247 and KDB: 905462
	Test standard:	Part 15 Subpart C §15.407 (h), RSS-247 and KDB: 905462 D02

LIMITS:

Table 3 below provides the DFS Detection Thresholds for Master Devices as well as Client Devices incorporating In-Service Monitoring.

Table 3: DFS Detection Thresholds for Master Devices and Client Devices with Radar Detection

Maximum Transmit Power	Value (See Notes 1, 2, and 3)
EIRP ≥ 200 milliwatt	-64 dBm
EIRP < 200 milliwatt and power spectral density < 10 dBm/MHz	-62 dBm
EIRP < 200 milliwatt that do not meet the power spectral density requirement	-64 dBm
Note 1: This is the level at the input of the receiver assuming a 0 dBi receive antenna. **Note 2:** Throughout these test procedures an additional 1 dB has been added to the amplitude of the test transmission waveforms to account for variations in measurement equipment. This will ensure that the test signal is at or above the detection threshold level to trigger a DFS response. **Note3:** EIRP is based on the highest antenna gain. For MIMO devices refer to KDB Publication 662911 D01.	

TEST SETUP:

UUT AS MASTER

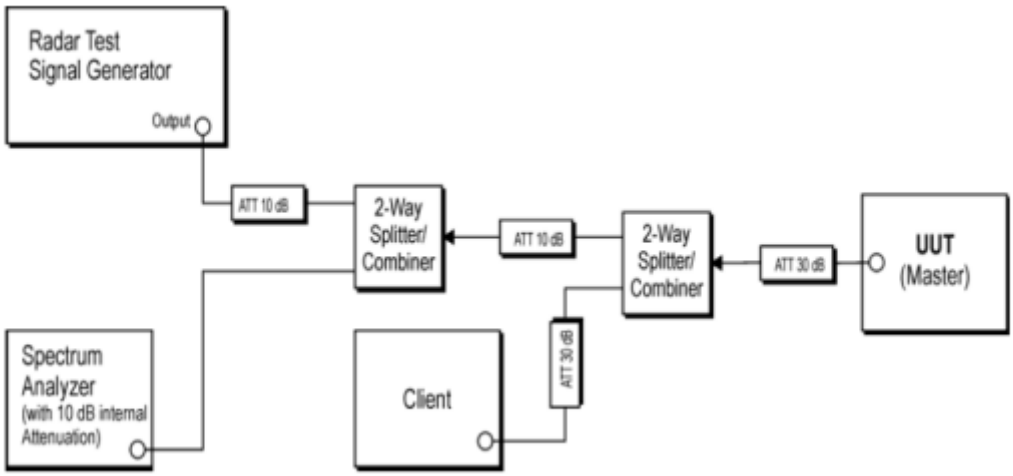

TESTED SAMPLES:	S/01
TEST RESULTS:	PASS

DUT Ports used for Testing: Port 1 and Port 4
Antenna gain: -2.8 dBi

Description	Value	Unit
Configured DUT EIRP:	100	mW
Requirement of the Detection threshold value for this given values acc. to FCC clause 5.2 / Table 3	-62	dBm
Given additional level added to the amplitude of the waveform to account for variations in measurement equipment acc. to FCC clause 5.2 / Table 3 / Note 2	1.00	dB
This results in the following radar signal level at the DUT	-61.00	dBm

TEST B.2: DFS: UNII DETECTION BANDWIDTH

LIMITS:	Product standard:	Part 15 Subpart C §15.407, RSS-247 and KDB: 905462
	Test standard:	Part 15 Subpart C §15.407 (h), RSS-247 6.3 and KDB: 905462 D02

LIMITS:

Minimum 100% of the UNII 99% transmission power bandwidth. See Note 1.

Note 1: During the U-NII Detection Bandwidth detection test, any one of the radar types 0-4 can be used. For each frequency step the minimum percentage of detection is 90 percent. Measurements are performed with no data traffic.

TEST SETUP:

UUT AS MASTER

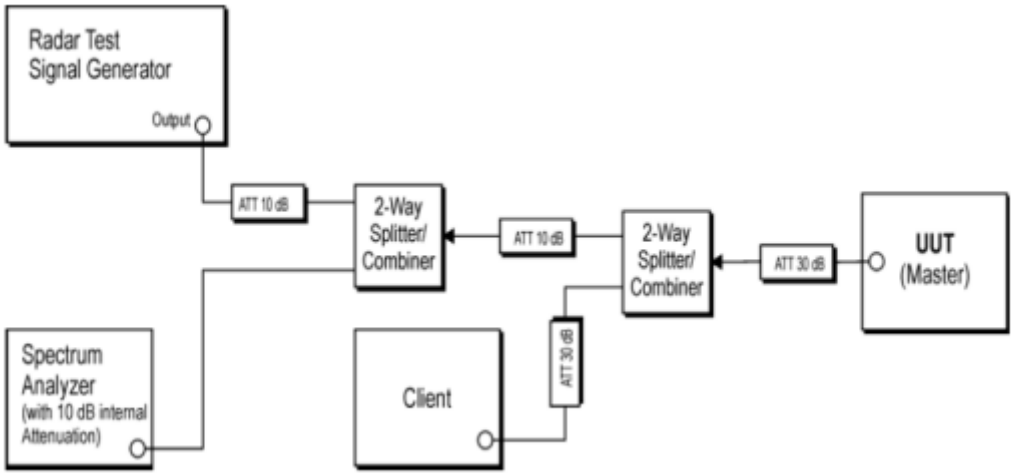

TESTED SAMPLES:	S/01
TESTED CONDITIONS MODES:	TC#01 **(ac mode 20 MHz)**
TEST RESULTS:	PASS

Measurement Summary

DUT Frequency (MHz)	Radar Type No.	Measured Detection Bandwidth (MHz)	99% Transmission power Bandwidth (MHz)	Overall Result	Overall Comment
5260.000000	0	21.000000	20.000000	PASS	

Detection Bandwidth Detailed Results

Check Frequency (MHz)	Detection count	Percentage of Detection	Minimum Limit	Single Measurement Result	Single Measurement Comment
5245.000000	0 of 10	0 %	90%	FAIL	
5248.000000	0 of 10	0 %	90%	FAIL	
5249.000000	10 of 10	100 %	90%	PASS	Lower Limit
5250.000000	10 of 10	100 %	90%	PASS	
5255.000000	10 of 10	100 %	90%	PASS	
5260.000000	10 of 10	100 %	90%	PASS	
5265.000000	10 of 10	100 %	90%	PASS	
5270.000000	9 of 10	90 %	90%	PASS	Upper Limit
5271.000000	0 of 10	0 %	90%	FAIL	
5275.000000	0 of 10	0 %	90%	FAIL	

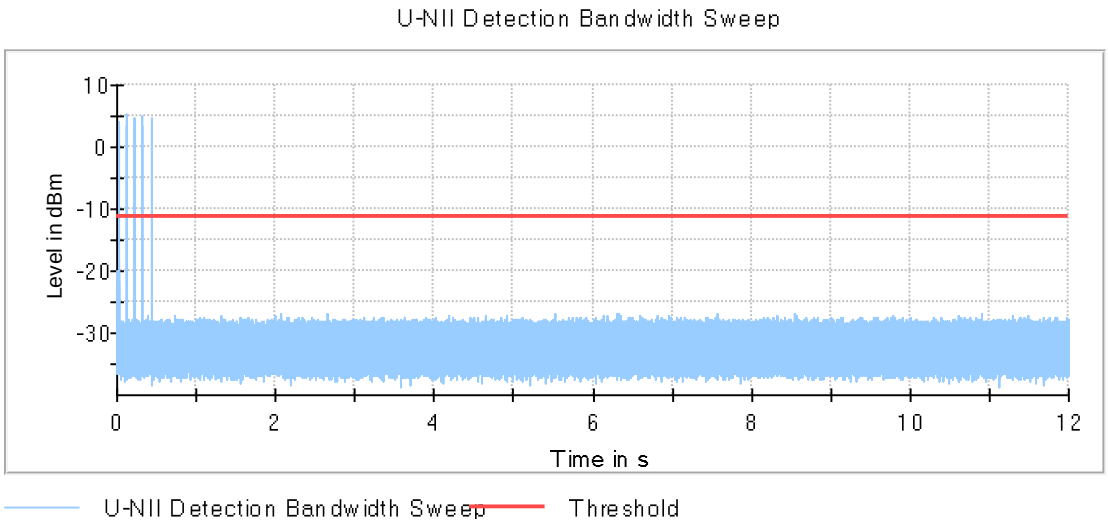

TEST RESULTS (Cont.):	

U-NII Detection Bandwidth Sweep

Setting	Instrument Value
Center Frequency	5.26000 GHz
Span	Zero Span
RBW	3.000 MHz
VBW	3.000 MHz
Sweep Points	30001
Sweep time	12.000 s
Reference Level	-20.000 dBm
Attenuation	0.000 dB
Detector	MaxPeak
Sweep Count	1
Filter	3 dB
Trace Mode	Clear Write
Sweep type	Sweep
Preamp	off
Trigger	External
Trigger Offset	0.000 s

Radar level verification

Description	Value	Unit
Configured DUT EIRP:	100	mW
Configured DUT PSD:	3.90	dBm/MHz
Requirement of the Detection threshold value for this given values acc. to FCC clause 5.2 / Table 3	-62	dBm
Vector Generator level setting	-3.97	dBm
Configured overall path loss from Vector Generator RF out to DUT connector of 'DUT to OSP'-cable	57.03	dB
Given additional level added to the amplitude of the waveform to account for variations in measurement equipment acc. to FCC clause 5.2 / Table 3 / Note 2	1.00	dB
This results in the following radar signal level at the DUT	-61.00	dBm

TESTED SAMPLES:	S/01
TESTED CONDITIONS MODES:	TC#01 **(ac mode 40 MHz)**
TEST RESULTS:	PASS

Measurement Summary

DUT Frequency (MHz)	Radar Type No.	Measured Detection Bandwidth (MHz)	99% Transmission power Bandwidth (MHz)	Overall Result	Overall Comment
5270.000000	0	41.000000	40.000000	PASS	

Detection Bandwidth Detailed Results

Check Frequency (MHz)	Detection count	Percentage of Detection	Minimum Limit	Single Measurement Result	Single Measurement Comment
5245.000000	0 of 10	0 %	90%	FAIL	
5249.000000	8 of 10	80 %	90%	FAIL	
5250.000000	10 of 10	100 %	90%	PASS	Lower Limit
5255.000000	10 of 10	100 %	90%	PASS	
5260.000000	10 of 10	100 %	90%	PASS	
5265.000000	10 of 10	100 %	90%	PASS	
5270.000000	10 of 10	100 %	90%	PASS	
5275.000000	10 of 10	100 %	90%	PASS	
5280.000000	10 of 10	100 %	90%	PASS	
5285.000000	10 of 10	100 %	90%	PASS	
5290.000000	10 of 10	100 %	90%	PASS	
5291.000000	10 of 10	100 %	90%	PASS	Upper Limit
5292.000000	0 of 10	0 %	90%	FAIL	
5295.000000	0 of 10	0 %	90%	FAIL	

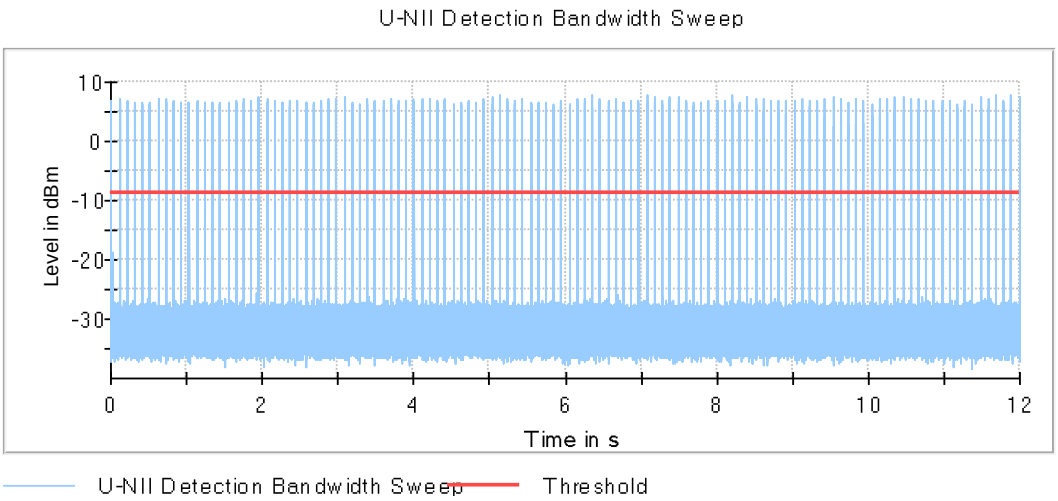

TEST RESULTS (Cont.):	

U-NII Detection Bandwidth Sweep

Setting	Instrument Value
Center Frequency	5.27000 GHz
Span	Zero Span
RBW	3.000 MHz
VBW	3.000 MHz
Sweep Points	30001
Sweep time	12.000 s
Reference Level	-20.000 dBm
Attenuation	0.000 dB
Detector	MaxPeak
Sweep Count	1
Filter	3 dB
Trace Mode	Clear Write
Sweep type	Sweep
Preamp	off
Trigger	External
Trigger Offset	0.000 s

Radar level verification

Description	Value	Unit
Configured DUT EIRP:	100	mW
Configured DUT PSD:	4.51	dBm/MHz
Requirement of the Detection threshold value for this given values acc. to FCC clause 5.2 / Table 3	-62	dBm
Vector Generator level setting	-3.87	dBm
Configured overall path loss from Vector Generator RF out to DUT connector of 'DUT to OSP'-cable	57.13	dB
Given additional level added to the amplitude of the waveform to account for variations in measurement equipment acc. to FCC clause 5.2 / Table 3 / Note 2	1.00	dB
This results in the following radar signal level at the DUT	-61.00	dBm

TESTED SAMPLES:	S/01
TESTED CONDITIONS MODES:	TC#01 **(ac mode 80 MHz)**
TEST RESULTS:	PASS

Measurement Summary

DUT Frequency (MHz)	Radar Type No.	Measured Detection Bandwidth (MHz)	99% Transmission power Bandwidth (MHz)	Overall Result	Overall Comment
5290.000000	0	82.000000	80.000000	PASS	

Detection Bandwidth Detailed Results

Check Frequency (MHz)	Detection count	Percentage of Detection	Minimum Limit	Single Measurement Result	Single Measurement Comment
5245.000000	0 of 10	0 %	90%	FAIL	
5248.000000	0 of 10	0 %	90%	FAIL	
5249.000000	10 of 10	100 %	90%	PASS	Lower Limit
5250.000000	10 of 10	100 %	90%	PASS	
5255.000000	10 of 10	100 %	90%	PASS	
5260.000000	10 of 10	100 %	90%	PASS	
5265.000000	10 of 10	100 %	90%	PASS	
5270.000000	10 of 10	100 %	90%	PASS	
5275.000000	10 of 10	100 %	90%	PASS	
5280.000000	10 of 10	100 %	90%	PASS	
5285.000000	10 of 10	100 %	90%	PASS	
5290.000000	10 of 10	100 %	90%	PASS	
5295.000000	10 of 10	100 %	90%	PASS	
5300.000000	10 of 10	100 %	90%	PASS	
5305.000000	10 of 10	100 %	90%	PASS	
5310.000000	9 of 10	90 %	90%	PASS	
5315.000000	10 of 10	100 %	90%	PASS	
5320.000000	9 of 10	90 %	90%	PASS	
5325.000000	10 of 10	100 %	90%	PASS	
5330.000000	10 of 10	100 %	90%	PASS	
5331.000000	10 of 10	100 %	90%	PASS	Upper Limit
5332.000000	0 of 10	0 %	90%	FAIL	
5335.000000	0 of 10	0 %	90%	FAIL	

TEST RESULTS (Cont.):	

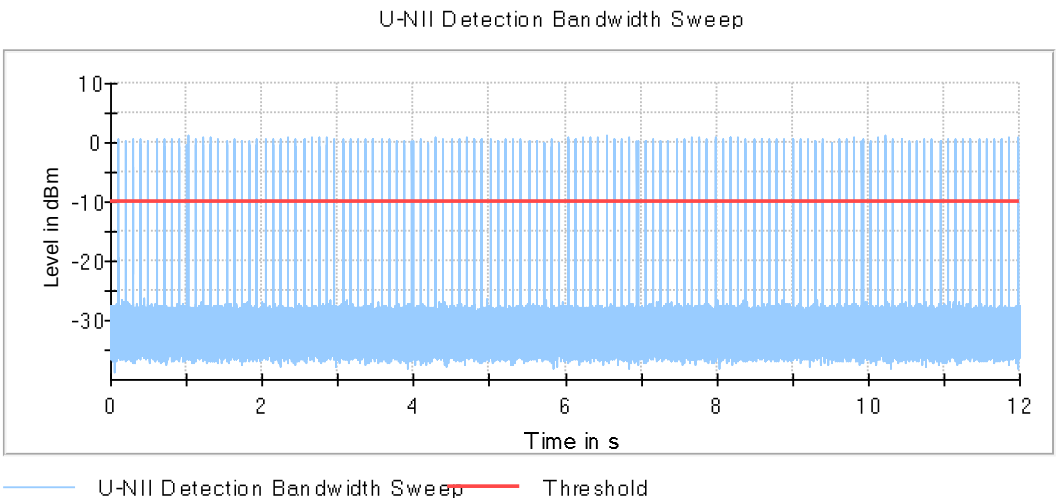

U-NII Detection Bandwidth Sweep

Setting	Instrument Value
Center Frequency	5.29000 GHz
Span	Zero Span
RBW	3.000 MHz
VBW	3.000 MHz
Sweep Points	30001
Sweep time	12.000 s
Reference Level	-20.000 dBm
Attenuation	0.000 dB
Detector	MaxPeak
Sweep Count	1
Filter	3 dB
Trace Mode	Clear Write
Sweep type	Sweep
Preamp	off
Trigger	External
Trigger Offset	0.000 s

Radar level verification

Description	Value	Unit
Configured DUT EIRP:	100	mW
Configured DUT PSD:	-2.18	dBm/MHz
Requirement of the Detection threshold value for this given values acc. to FCC clause 5.2 / Table 3	-62	dBm
Vector Generator level setting	-4.01	dBm
Configured overall path loss from Vector Generator RF out to DUT connector of 'DUT to OSP'-cable	56.99	dB
Given additional level added to the amplitude of the waveform to account for variations in measurement equipment acc. to FCC clause 5.2 / Table 3 / Note 2	1.00	dB
This results in the following radar signal level at the DUT	-61.00	dBm

TEST B.3: DFS: CHANNEL AVAILABILITY CHECK

LIMITS:	Product standard:	Part 15 Subpart C §15.407, RSS-247 and KDB: 905462
	Test standard:	Part 15 Subpart C §15.407 (h), RSS-247 and KDB: 905462 D02

LIMITS:

The EUT shall perform a Channel Availability Check to ensure that there is no radar operating on the channel. After power-up sequence, receive at least 1 minute (60 sec) on the intended operating frequency..

TEST SETUP:	

UUT AS MASTER

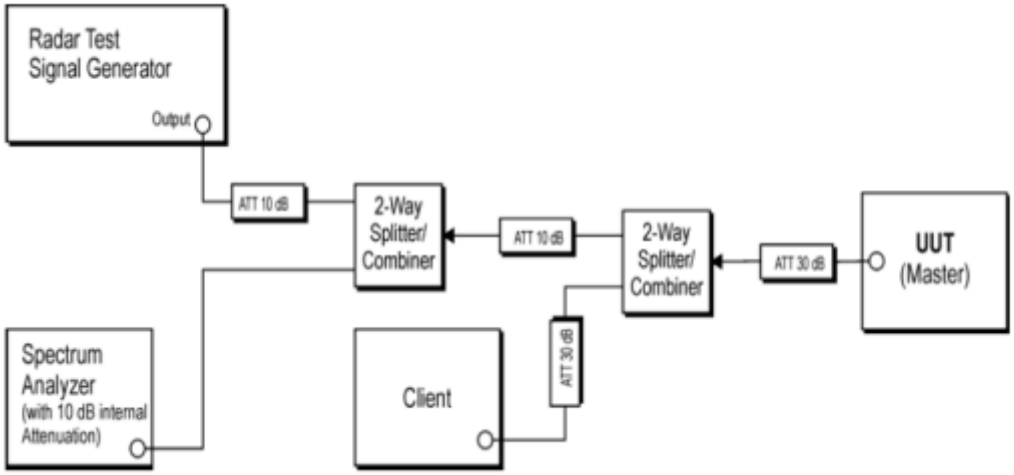

TESTED SAMPLES:	S/01
TESTED CONDITIONS MODES:	TC#01 **(ac mode 20 MHz)**
TEST RESULTS:	PASS

Measurement Summary

DUT Frequency (MHz)	Radar Waveform Filename used	CAC Type	Overall Result	Overall Comment
5260.000000	FCC15407_2014-Type0-18.wv	Begin of CAC	PASS	
5260.000000	FCC15407_2014-Type0-18.wv	End of CAC Phase	PASS	

Measurement Detailed Results

DUT Frequency (MHz)	Radar Type No.	CAC Type	Measured Startup time (s)	Configured Startup time (s)	Kind of Measurement
5260.000000	0	Begin of CAC	--	120.000	Before Radar
5260.000000	0	Begin of CAC	--	120.000	After Radar
5260.000000	0	End of CAC	--	120.000	Before Radar
5260.000000	0	End of CAC	--	120.000	After Radar

(continuation of the "Measurement Detailed Results" table from column 6 ...)

DUT Frequency (MHz)	Time of Tx Start (s)	Limit (s)	Result	Comment
5260.000000	0.000	0.00	PASS	No emissions detected; OK
5260.000000	>150.0	>150.0	PASS	Limit is acquisition time after radar burst. See Note 1.
5260.000000	0.000	0.00	PASS	No emissions detected; OK
5260.000000	>150.0	>150.0	PASS	Limit is acquisition time after radar burst. See Note 1.

Radar Pulse verification Summary

Radar Type No.	No. of Pulses	Required No. of Pulses	Min. Pulse width (µs)	Max. Pulse width (µs)	Required Pulse width (µs)	Measured Min. PRI (µs)
0	18	18	0.900	1.000	1.000	1427.900
0	19	18	0.900	1.000	1.000	1427.900

(continuation of the "Radar Pulse verification Summary" table from column 7 ...)

Radar Type No.	Measured Max. PRI (µs)	Required PRI (µs)	Result	Comment
0	1428.000	1428	PASS	See Note 3.
0	9637.600	1428	PASS	See Note 3.

TEST RESULTS (Cont.):	

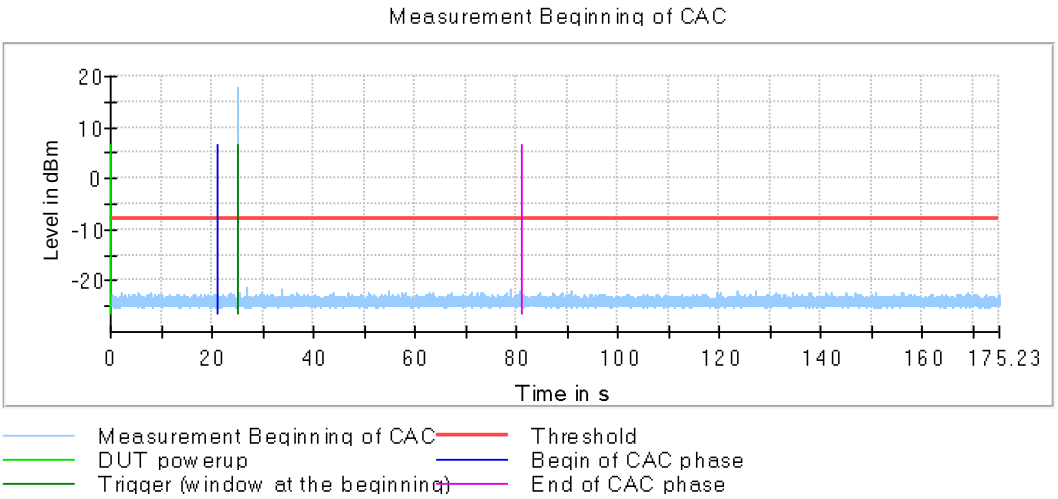

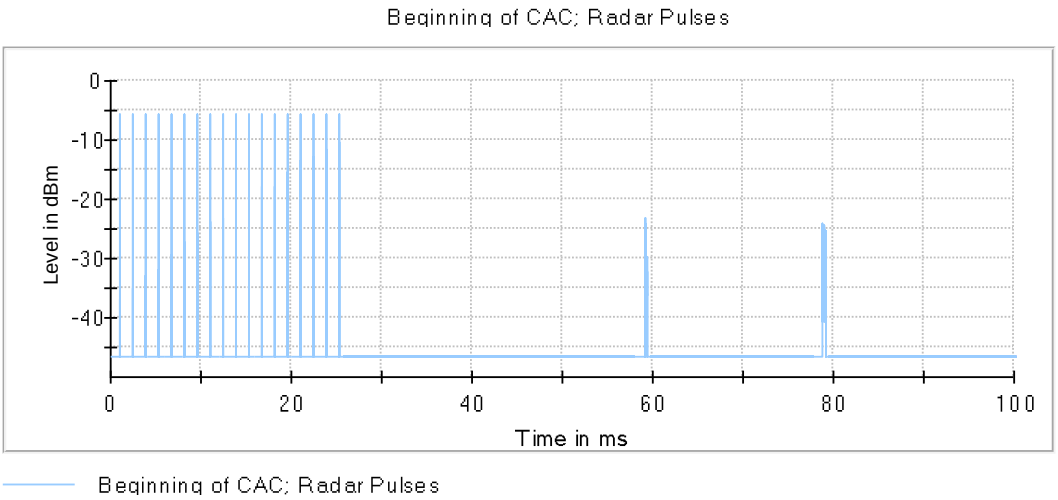

TEST RESULTS (Cont.):	

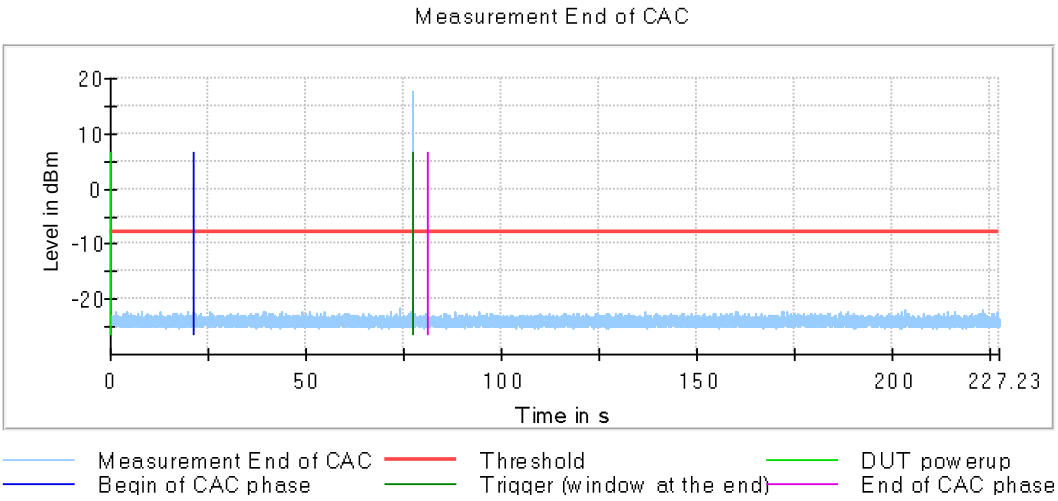

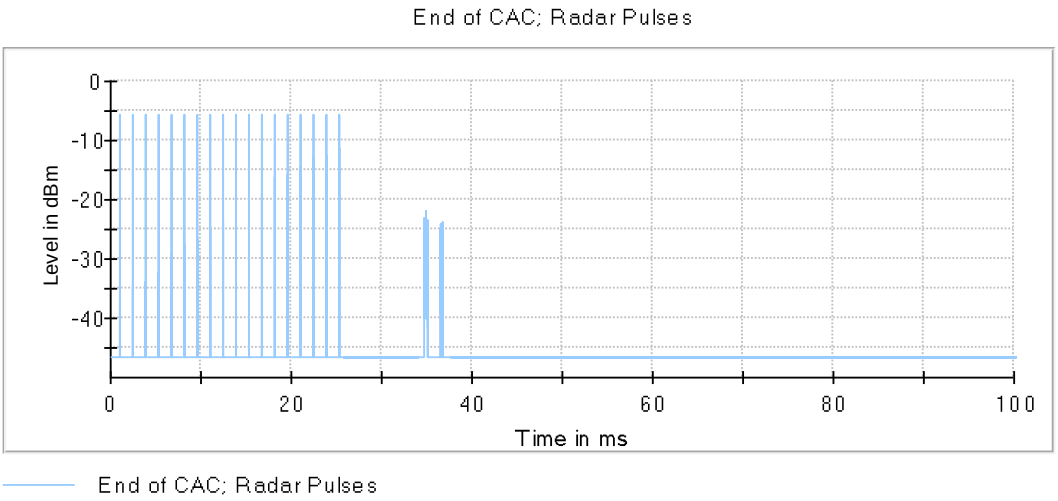

TEST RESULTS (Cont.):	

Radar Pulse verification detail (Begin of CAC Phase)

Radar Type No.	Pulse No.	Pulse width (µs)	Required Pulse width (µs)
0	1	0.900	1.000
0	2	0.900	1.000
0	3	0.900	1.000
0	4	0.900	1.000
0	5	0.900	1.000
0	6	0.900	1.000
0	7	0.900	1.000
0	8	0.900	1.000
0	9	0.900	1.000
0	10	0.800	1.000
0	11	0.900	1.000
0	12	0.900	1.000
0	13	0.900	1.000
0	14	0.800	1.000
0	15	0.900	1.000
0	16	0.900	1.000
0	17	0.900	1.000
0	18	0.800	1.000

Radar Pulse verification detail (End of CAC Phase)

Radar Type No.	Pulse No.	Pulse width (µs)	Required Pulse width (µs)
0	1	0.900	1.000
0	2	0.900	1.000
0	3	0.900	1.000
0	4	0.900	1.000
0	5	0.900	1.000
0	6	0.900	1.000
0	7	0.900	1.000
0	8	0.900	1.000
0	9	0.900	1.000
0	10	0.800	1.000
0	11	0.900	1.000
0	12	0.900	1.000
0	13	0.900	1.000
0	14	0.800	1.000
0	15	0.900	1.000
0	16	0.900	1.000
0	17	0.900	1.000
0	18	0.900	1.000

TEST RESULTS (Cont.):	

Radar level verification

Description	Value	Unit
Configured DUT EIRP:	100	mW
Configured DUT PSD:	3.90	dBm/MHz
Requirement of the Detection threshold value for this given values acc. to FCC clause 5.2 / Table 3	-62	dBm
Vector Generator level setting	-3.85	dBm
Configured overall path loss from Vector Generator RF out to DUT connector of 'DUT to OSP'-cable	57.15	dB
Given additional level added to the amplitude of the waveform to account for variations in measurement equipment acc. to FCC clause 5.2 / Table 3 / Note 2	1.00	dB
This results in the following radar signal level at the DUT	-61.00	dBm

Additional Information

Note	Description
Note 1:	Sweep of Analyzer and Radar pulse waveform are triggered at the same time. Therefore, the radar pulses maybe can be seen at the trigger point of the trace. Analysis of the Sweeps excludes the covered time for the radar pulses.
Note 2:	The radar signal is simultaneously evaluated as the analyzer sweep after radar injection.
Note 3:	Measurement uncertainty due to sampling rate of 10MHz is 300ns (3 samples)
Note 4:	If user defined waveform is configured (myARB.wv) then no additional limits are available and measured values cannot be checked.

TEST RESULTS (Cont.):	

Startup time

Setting	Instrument Value
Center	5.26000 GHz
Span	Zero Span
RBW	3.000 MHz
VBW	3.000 MHz
Sweep Points	1001
Sweep time	20.000 ms
Reference Level	-20.000 dBm
Attenuation	0.000 dB
Detector	MaxPeak
Sweep Count	1
Filter	3 dB
Trace Mode	Clear Write
Sweep type	Sweep
Preamp	off
Trigger	Video
Trigger Offset	constant
Center	64.600 %
Span	0.000 s

Begin of CAC Phase

Setting	Instrument Value
Center	5.26000 GHz
Span	Zero Span
RBW	3.000 MHz
VBW	3.000 MHz
Sweep Points	30001
Sweep time	454.233 s
Reference Level	-20.000 dBm
Attenuation	0.000 dB
Detector	MaxPeak
Sweep Count	1
Filter	3 dB
Trace Mode	Clear Write
Sweep type	Sweep
Preamp	off
Trigger	External
Trigger Offset	304.233 s

TEST RESULTS (Cont.):	

End of CAC Phase

Setting	Instrument Value
Center	5.26000 GHz
Span	Zero Span
RBW	3.000 MHz
VBW	3.000 MHz
Sweep Points	30001
Sweep time	506.233 s
Reference Level	-20.000 dBm
Attenuation	0.000 dB
Detector	MaxPeak
Sweep Count	1
Filter	3 dB
Trace Mode	Clear Write
Sweep type	Sweep
Preamp	off
Trigger	External
Trigger Offset	356.233 s

OSP Radar Pulse Detector

Setting	Instrument Value
Measurement Time	100.000 ms
Sample rate	10000 kHz
Trace points	1000000
Time resolution	0.100 µs
Detector	Peak

TEST B.4: DFS: IN-SERVICE MONITORING

LIMITS:	Product standard:	Part 15 Subpart C §15.407, RSS-247 and KDB: 905462
	Test standard:	Part 15 Subpart C §15.407 (h), RSS-247 and KDB: 905462 D02

LIMITS:

200 ms + an aggregate of 60 ms over remaining 10s period. See Notes 1 and 2.

Note 1: Channel Move Time and the Channel Transmission Time should be performed with Radar Type 0. The measurement timing begins at the end of the Radar Type 0 burst.

Note 2: The Channel closing Transmission time is comprised of 200 ms starting at the beginning of the channel move time plus any additional intermittent control signals required to facilitate a channel move (an aggregate of 60ms) during the remainder of the 10s period. The aggregate duration of control signals will not count quiet periods in between transmissions.

TEST SETUP:

UUT AS MASTER

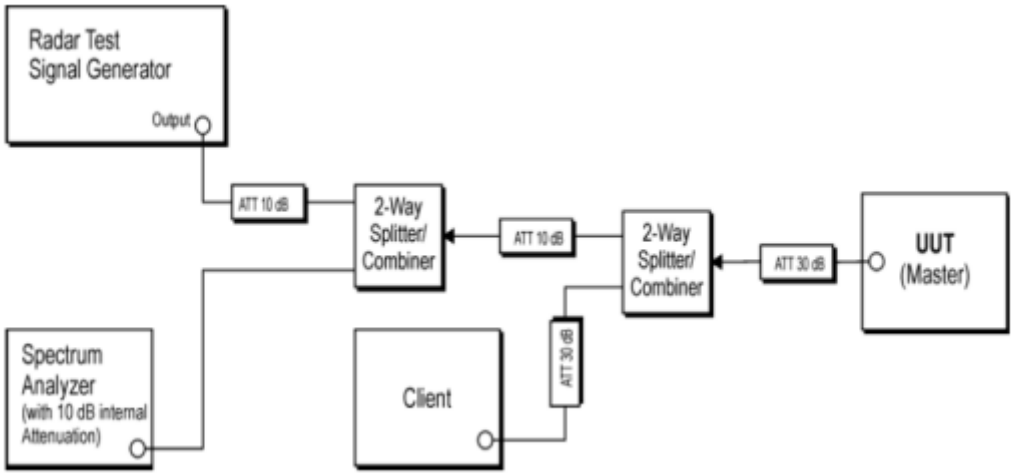

TESTED SAMPLES:	S/01
TESTED CONDITIONS MODES:	TC#01 **(ac mode 80 MHz)**
TEST RESULTS:	PASS

Measurement Summary

DUT Frequency (MHz)	Radar Type No.	Type of Measurement value	Overall Result	Overall Comment
5290.000000	0	First of all Transmit Test	PASS	DUT is transmitting
5290.000000	0	Channel Move Time	PASS	
5290.000000	0	Channel Closing Transmission Time	PASS	
5290.000000	0	Non-occupancy period	PASS	

Channel Move Time Detailed Results

DUT Frequency (MHz)	Radar Type No.	CMT Tx Time (s)	CMT Limit (s)	CMT Result	CMT Comment
5290.000000	0	0.403	10.000	PASS	Tx Time value is last trailing edge found within sweep. See Note 1.

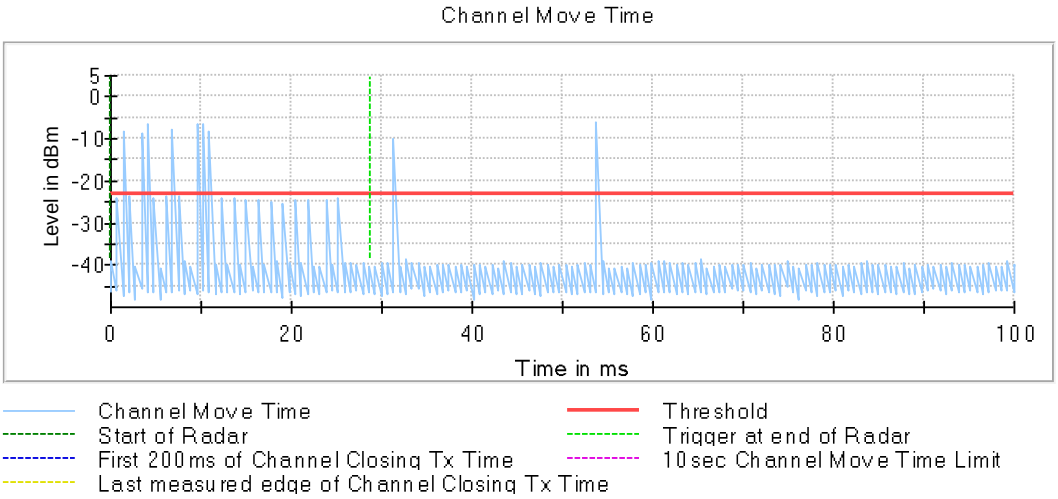

Channel Closing Transmission Time Detailed Results

DUT Frequency (MHz)	Radar Type No.	CCTT Type of Value	CCTT No. of Pulses found	CCTT Tx Time (ms)
5290.000000	0	first 200 ms	6	1.112
5290.000000	0	remaining 10.0 second(s) period	8	1.220

TEST RESULTS (Cont.):	

(continuation of the "Channel Closing Transmission Time Detailed Results" table from column 5 ...)

DUT Frequency (MHz)	CCTT Tx Time Limit (ms)	CCTT Result	CCTT Comment
5300.000000	200.000	PASS	See Note 1.
5300.000000	60.000	PASS	See Note 1.

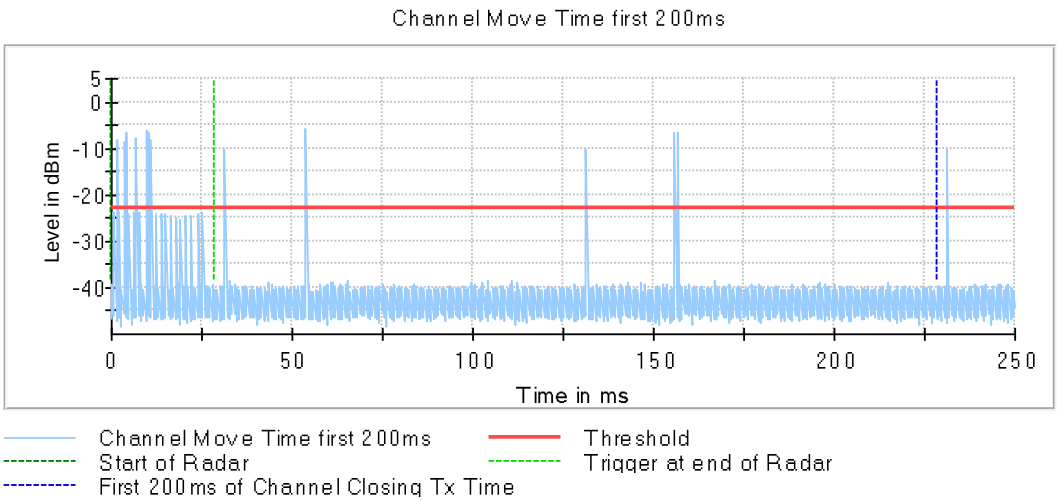

Additional Information

Note	Description
Note 1:	Because of the radar pulse event at the beginning, the investigation of the trace begins with an offset of 28.7 ms conforming to the end of the Radar burst.
Note 2:	Channel move time (CMT) / channel closing transmission time (CCTT) measurement was made with hi resolution video sweep using OSP DAQ channel
Note 3:	Because of the substantially higher sampling rate of the video signal the results for CCTT and CMT are more accurate than in the graphics visible. Reached timing accuracy of the video trace: approx. 4 µs
Note 4:	The Non-Occupancy Period trace starts at the end of the Channel move time trace (20.000 secs.) Labeling of the x-axis (time) is relative to its beginning (0 secs.)

TEST RESULTS (Cont.):	

Non-occupancy period Detailed Results

DUT Frequency (MHz)	Radar Type No.	NOP No. of Pulses found	NOP No. of Pulses Limit	NOP Tx Time (s)	NOP Tx Time Limit (s)	NOP Result
5290.000000	0	0	0	0.000	0.000	PASS

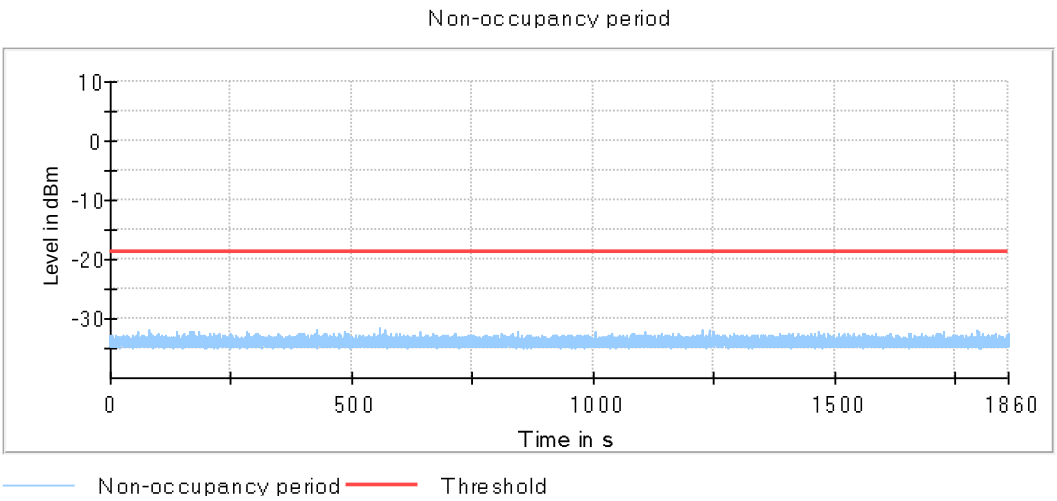

Transmitting Test Detailed Results

DUT Frequency (MHz)	Tx-Test Duty Cycle (%)	Tx-Test Cycle Limit	Tx-Test No. of Pulses found	Tx-Test Result	Tx-Test Comment
5290.000000	20	>=17 %	110	PASS	

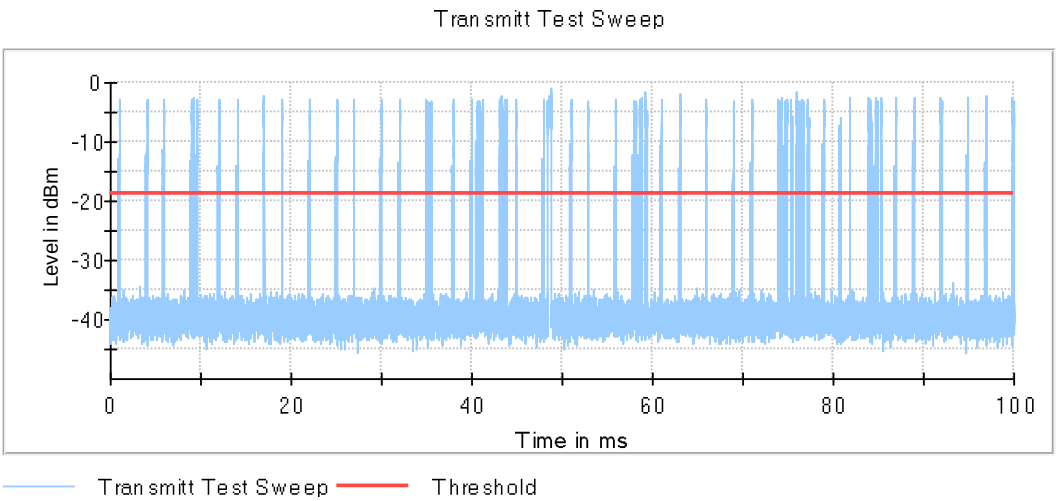

TEST RESULTS (Cont.):	

DUT Checkup

Setting	Instrument Value
Center Frequency	5.29000 GHz
Span	Zero Span
RBW	3.000 MHz
VBW	3.000 MHz
Sweep Points	30001
Sweep time	100.000 ms
Reference Level	-10.000 dBm
Attenuation	0.000 dB
Detector	MaxPeak
Sweep Count	1
Filter	3 dB
Trace Mode	Clear Write
Sweep type	Sweep
Preamp	off

Channel Move Time; Channel Closing Transmission Time

Setting	Instrument Value
Center Frequency	5.29000 GHz
Span	Zero Span
RBW	3.000 MHz
VBW	3.000 MHz
Sweep Points	30001
Sweep time	20.000 s
Reference Level	-20.000 dBm
Attenuation	0.000 dB
Detector	MaxPeak
Sweep Count	1
Filter	3 dB
Trace Mode	Clear Write
Sweep type	Sweep
Preamp	off
Trigger	External
Trigger Offset	0.000 s

Non-occupancy period

Setting	Instrument Value
Center Frequency	5.29000 GHz
Span	Zero Span
RBW	3.000 MHz
VBW	3.000 MHz
Sweep Points	30001
Sweep time	1.860 ks
Reference Level	-20.000 dBm
Attenuation	0.000 dB
Detector	MaxPeak
Sweep Count	1
Filter	3 dB
Trace Mode	Clear Write
Sweep type	Sweep
Preamp	off

TEST RESULTS (Cont.):	

Radar level verification

Description	Value	Unit
Configured DUT EIRP:	100	mW
Configured DUT PSD:	-2.18	dBm/MHz
Requirement of the Detection threshold value for this given values acc. to FCC clause 5.2 / Table 3	-62	dBm
Vector Generator level setting	-4.01	dBm
Configured overall path loss from Vector Generator RF out to DUT connector of 'DUT to OSP'-cable	56.99	dB
Given additional level added to the amplitude of the waveform to account for variations in measurement equipment acc. to FCC clause 5.2 / Table 3 / Note 2	1.00	dB
This results in the following radar signal level at the DUT	-61.00	dBm

TEST B.5: DFS: STATISTICAL PERFORMANCE CHECK

LIMITS:	Product standard:	Part 15 Subpart C §15.407, RSS-247 and KDB: 905462
	Test standard:	Part 15 Subpart C §15.407 (h), RSS-247 6.3 and KDB: 905462 D02

LIMITS:

Radar Type No.	Minimum Percentage of Successful Detection Limit	Detection Limit
1	60.0 %	60.0 %
2	60.0 %	60.0 %
3	60.0 %	60.0 %
4	60.0 %	60.0 %
5	80.0 %	80.0 %
6	80.0 %	80.0 %

The percentage of successful detection is calculated by:

$$\frac{TotalWaveformDetections}{TotalWaveformTrials} \times 100 = \text{Percentage of Successful Detection } Radar\ Waveform\ \text{N} = P_d\text{N}$$

In addition an aggregate minimum percentage of successful detection across all Short Pulse Radar Types 1-4 is required and is calculated as follows:

$$\frac{P_d 1 + P_d 2 + P_d 3 + P_d 4}{4}$$

TEST SETUP:

UUT AS MASTER

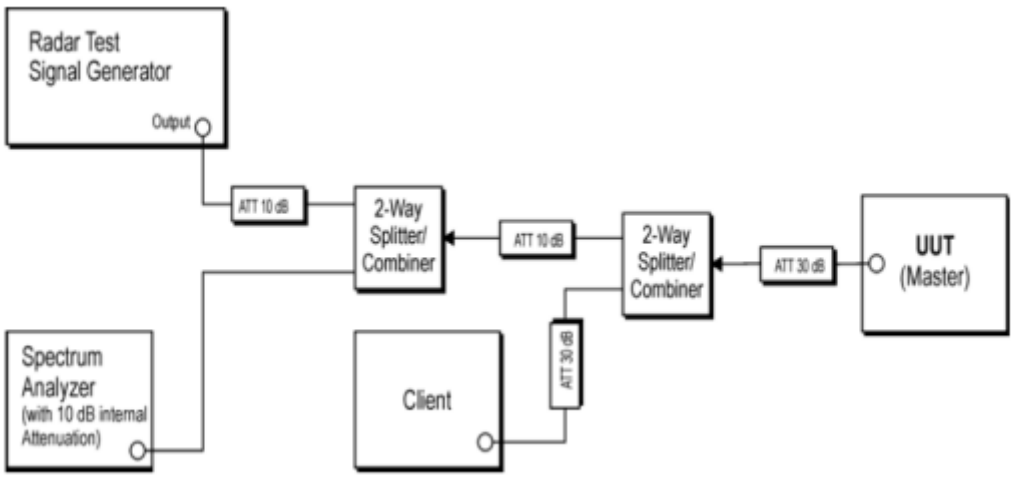

TESTED SAMPLES:	S/01
TESTED CONDITIONS MODES:	TC#01 **(ac mode 20 MHz)**
TEST RESULTS:	PASS

Measurement Summary

DUT Frequency (MHz)	Radar Type No.	Detection count	Percentage of Detection Px	Detection Limit	Overall Result	Overall Comment
5260.000000	1	30 of 30	100.00%	60.0 %	PASS	
5260.000000	2	30 of 30	100.00%	60.0 %	PASS	
5260.000000	3	30 of 30	100.00%	60.0 %	PASS	
5260.000000	4	30 of 30	100.00%	60.0 %	PASS	
5260.000000	5	30 of 30	100.00%	80.0 %	PASS	
5260.000000	6	30 of 30	100.00%	70.0 %	PASS	

Aggregate Results for Short Pulse Radar Type 1-4

Aggregate Calculation as follows	Aggregate Percentage	Aggregate Limit	Aggregate Result
(P1 + P2 + P3 + P4) / 4	100.00%	80.0 %	PASS

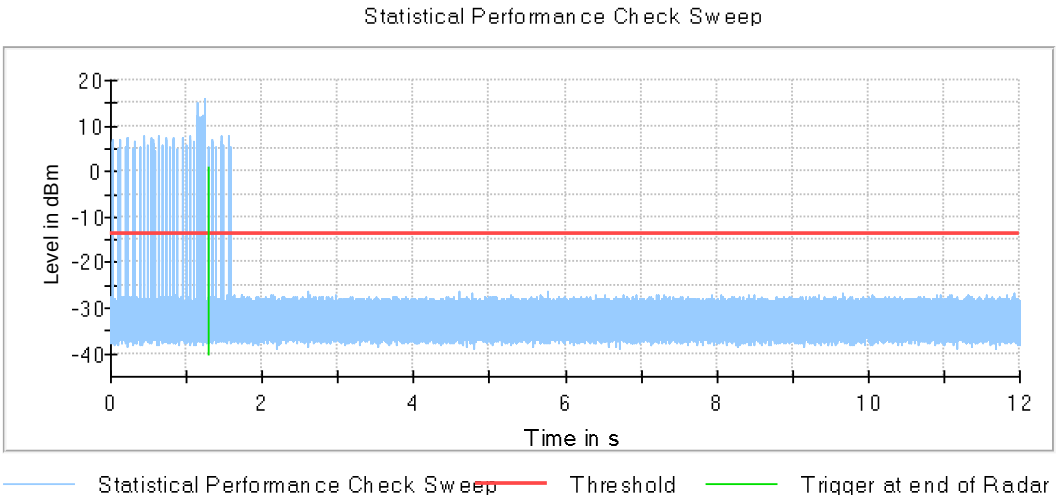

TEST RESULTS (Cont.):	

Detailed Results for Radar Type 1

Trial Number	Random Trial used	Pulse Width (µs)	PRI (µs)	No. of Pulses	Pulses Detected	Comment
1	41	1.000	2181.000	25	YES	
2	22	1.000	938.000	57	YES	
3	13	1.000	758.000	70	YES	
4	11	1.000	718.000	74	YES	
5	25	1.000	620.000	86	YES	
6	6	1.000	618.000	86	YES	
7	50	1.000	3060.000	18	YES	
8	8	1.000	658.000	81	YES	
9	36	1.000	1693.000	32	YES	
10	9	1.000	678.000	78	YES	
11	7	1.000	638.000	83	YES	
12	33	1.000	1400.000	38	YES	
13	46	1.000	2669.000	20	YES	
14	37	1.000	1791.000	30	YES	
15	48	1.000	2864.000	19	YES	
16	21	1.000	918.000	58	YES	
17	32	1.000	1303.000	41	YES	
18	19	1.000	878.000	61	YES	
19	34	1.000	1498.000	36	YES	
20	42	1.000	2279.000	24	YES	
21	35	1.000	1596.000	34	YES	
22	44	1.000	2474.000	22	YES	
23	24	1.000	522.000	102	YES	
24	12	1.000	738.000	72	YES	
25	43	1.000	2376.000	23	YES	
26	28	1.000	912.000	58	YES	
27	45	1.000	2572.000	21	YES	
28	16	1.000	818.000	65	YES	
29	3	1.000	558.000	95	YES	
30	20	1.000	898.000	59	YES	

TEST RESULTS (Cont.):	

Detailed Results for Radar Type 2

Trial Number	Random Trial used	Pulse Width (µs)	PRI (µs)	No. of Pulses	Pulses Detected	Comment
1	26	3.700	217.000	28	YES	
2	44	3.500	167.000	29	YES	
3	48	4.200	227.000	24	YES	
4	24	4.400	188.000	27	YES	
5	9	3.900	212.000	27	YES	
6	15	2.200	180.000	29	YES	
7	2	4.500	191.000	23	YES	
8	33	2.100	228.000	28	YES	
9	27	2.700	199.000	29	YES	
10	43	4.100	153.000	24	YES	
11	25	4.400	202.000	24	YES	
12	22	2.400	209.000	26	YES	
13	19	2.000	200.000	25	YES	
14	11	1.700	224.000	23	YES	
15	39	4.900	163.000	23	YES	
16	40	3.600	230.000	27	YES	
17	23	3.800	187.000	28	YES	
18	5	3.500	226.000	26	YES	
19	20	1.200	185.000	25	YES	
20	14	4.800	175.000	24	YES	
21	12	3.100	182.000	28	YES	
22	28	1.700	216.000	27	YES	
23	30	4.200	173.000	25	YES	
24	42	2.500	215.000	28	YES	
25	49	1.800	159.000	25	YES	
26	47	3.400	213.000	27	YES	
27	10	1.200	175.000	26	YES	
28	7	1.400	185.000	27	YES	
29	36	3.200	200.000	28	YES	
30	17	4.500	213.000	23	YES	

TEST RESULTS (Cont.):	

Detailed Results for Radar Type 3

Trial Number	Random Trial used	Pulse Width (µs)	PRI (µs)	No. of Pulses	Pulses Detected	Comment
1	4	8.300	462.000	17	YES	
2	40	7.400	271.000	17	YES	
3	7	6.500	466.000	17	YES	
4	43	6.700	398.000	17	YES	
5	9	6.300	454.000	17	YES	
6	37	7.500	217.000	17	YES	
7	18	6.200	263.000	18	YES	
8	36	9.800	494.000	17	YES	
9	16	8.900	340.000	16	YES	
10	49	6.500	288.000	18	YES	
11	32	8.700	356.000	18	YES	
12	1	8.000	494.000	18	YES	
13	10	9.800	206.000	17	YES	
14	19	9.600	336.000	18	YES	
15	15	8.100	436.000	17	YES	
16	27	6.600	301.000	17	YES	
17	29	9.900	446.000	17	YES	
18	45	6.700	426.000	17	YES	
19	34	6.400	477.000	17	YES	
20	2	7.500	211.000	17	YES	
21	11	9.000	500.000	16	YES	
22	31	8.800	487.000	17	YES	
23	5	8.200	464.000	18	YES	
24	46	8.500	349.000	17	YES	
25	14	6.600	455.000	16	YES	
26	41	7.700	467.000	16	YES	
27	39	7.200	358.000	18	YES	
28	12	8.000	463.000	17	YES	
29	20	8.200	272.000	18	YES	
30	13	8.400	343.000	17	YES	

TEST RESULTS (Cont.):	

Detailed Results for Radar Type 4

Trial Number	Random Trial used	Pulse Width (µs)	PRI (µs)	No. of Pulses	Pulses Detected	Comment
1	6	18.500	499.000	13	YES	
2	2	19.900	428.000	12	YES	
3	24	18.100	397.000	14	YES	
4	48	14.500	433.000	12	YES	
5	31	14.400	266.000	14	YES	
6	13	16.000	485.000	14	YES	
7	42	18.500	208.000	14	YES	
8	39	12.400	217.000	14	YES	
9	10	14.200	351.000	12	YES	
10	32	12.600	293.000	15	YES	
11	1	15.900	410.000	13	YES	
12	28	13.000	309.000	14	YES	
13	21	11.700	483.000	16	YES	
14	4	12.600	360.000	14	YES	
15	49	11.100	396.000	13	YES	
16	34	17.300	366.000	14	YES	
17	30	11.800	384.000	14	YES	
18	50	14.400	286.000	12	YES	
19	15	14.700	324.000	13	YES	
20	29	17.300	287.000	16	YES	
21	14	16.600	212.000	16	YES	
22	8	14.100	283.000	15	YES	
23	16	19.900	366.000	14	YES	
24	38	15.500	451.000	15	YES	
25	9	13.300	254.000	14	YES	
26	33	19.500	384.000	13	YES	
27	40	13.600	237.000	15	YES	
28	12	16.000	461.000	13	YES	
29	46	15.300	488.000	14	YES	
30	22	17.800	420.000	13	YES	

TEST RESULTS (Cont.):	

Detailed Results for Radar Type 5

Trial Number	Random Trial used	Pulses Detected	Comment
1	27	YES	For detailed burst Data see separate table
2	16	YES	For detailed burst Data see separate table
3	33	YES	For detailed burst Data see separate table
4	8	YES	For detailed burst Data see separate table
5	4	YES	For detailed burst Data see separate table
6	41	YES	For detailed burst Data see separate table
7	9	YES	For detailed burst Data see separate table
8	35	YES	For detailed burst Data see separate table
9	5	YES	For detailed burst Data see separate table
10	12	YES	For detailed burst Data see separate table
11	24	YES	For detailed burst Data see separate table
12	13	YES	For detailed burst Data see separate table
13	28	YES	For detailed burst Data see separate table
14	17	YES	For detailed burst Data see separate table
15	30	YES	For detailed burst Data see separate table
16	37	YES	For detailed burst Data see separate table
17	49	YES	For detailed burst Data see separate table
18	15	No	For detailed burst Data see separate table
19	21	YES	For detailed burst Data see separate table
20	26	YES	For detailed burst Data see separate table
21	7	YES	For detailed burst Data see separate table
22	20	YES	For detailed burst Data see separate table
23	47	YES	For detailed burst Data see separate table
24	25	YES	For detailed burst Data see separate table
25	40	YES	For detailed burst Data see separate table
26	6	YES	For detailed burst Data see separate table
27	22	YES	For detailed burst Data see separate table
28	46	YES	For detailed burst Data see separate table
29	45	YES	For detailed burst Data see separate table
30	34	YES	For detailed burst Data see separate table

Detailed Results for Radar Type 5_Trial 1

Burst	No. of Pulses	Pulse Width (µs)	Chirp Width (MHz)	Pulse 1-to-2 Spacing (µs)	Pulse 2-to-3 Spacing (µs)	Starting Location Within Interval
1	2	55.900	14.000000	1883.000	---	1025.000
2	2	64.100	14.000000	1710.000	---	849.000
3	2	77.200	14.000000	1650.000	---	136.000
4	2	96.600	14.000000	1520.000	---	468.000
5	2	98.000	14.000000	923.000	---	376.000
6	2	66.700	14.000000	1462.000	---	705.000
7	3	66.400	14.000000	1003.000	1192.000	1416.000
8	2	57.000	14.000000	1038.000	---	240.000

TEST RESULTS (Cont.):	

Detailed Results for Radar Type 5_Trial 2

Burst	No. of Pulses	Pulse Width (µs)	Chirp Width (MHz)	Pulse 1-to-2 Spacing (µs)	Pulse 2-to-3 Spacing (µs)	Starting Location Within Interval (µs)
1	3	53.400	13.000000	1343.000	1742.000	651.000
2	1	57.300	13.000000	---	---	857.000
3	1	61.900	13.000000	---	---	567.000
4	3	60.500	13.000000	1355.000	1499.000	847.000
5	1	62.000	13.000000	---	---	1014.000
6	2	94.800	13.000000	1584.000	---	512.000
7	1	64.300	13.000000	---	---	992.000
8	3	93.200	13.000000	1157.000	1861.000	285.000
9	3	56.000	13.000000	1813.000	1900.000	1189.000
10	2	79.100	13.000000	1234.000	---	1006.000

Detailed Results for Radar Type 5_Trial 3

Burst	No. of Pulses	Pulse Width (µs)	Chirp Width (MHz)	Pulse 1-to-2 Spacing (µs)	Pulse 2-to-3 Spacing (µs)	Starting Location Within Interval (µs)
1	2	59.500	11.000000	1738.000	---	660.000
2	1	57.000	11.000000	---	---	796.000
3	2	54.400	11.000000	1891.000	---	779.000
4	2	97.500	11.000000	1566.000	---	298.000
5	3	52.000	11.000000	1941.000	1472.000	201.000
6	1	62.500	11.000000	---	---	211.000
7	2	79.100	11.000000	1016.000	---	30.000
8	2	98.600	11.000000	927.000	---	485.000
9	2	52.900	11.000000	1814.000	---	328.000
10	2	64.600	11.000000	1644.000	---	339.000
11	3	75.300	11.000000	1710.000	1296.000	500.000
12	1	74.200	11.000000	---	---	451.000
13	1	58.400	11.000000	---	---	160.000
14	1	97.500	11.000000	---	---	573.000

Detailed Results for Radar Type 5_Trial 4

Burst	No. of Pulses	Pulse Width (µs)	Chirp Width (MHz)	Pulse 1-to-2 Spacing (µs)	Pulse 2-to-3 Spacing (µs)	Starting Location Within Interval (µs)
1	3	93.000	5.000000	1554.000	1785.000	287.000
2	1	83.900	5.000000	---	---	719.000
3	1	58.600	5.000000	---	---	22.000
4	2	51.600	5.000000	1301.000	---	508.000
5	2	86.000	5.000000	971.000	---	394.000
6	2	52.400	5.000000	1014.000	---	126.000
7	2	81.600	5.000000	1650.000	---	756.000
8	2	73.500	5.000000	1428.000	---	653.000
9	1	58.900	5.000000	---	---	761.000
10	1	93.500	5.000000	---	---	118.000
11	2	90.600	5.000000	1774.000	---	108.000
12	2	58.400	5.000000	1448.000	---	740.000
13	2	89.100	5.000000	1406.000	---	689.000
14	2	73.900	5.000000	1071.000	---	160.000
15	1	61.700	5.000000	---	---	172.000

TEST RESULTS (Cont.):	

Detailed Results for Radar Type 5_Trial 5

Burst	No. of Pulses	Pulse Width (µs)	Chirp Width (MHz)	Pulse 1-to-2 Spacing (µs)	Pulse 2-to-3 Spacing (µs)	Starting Location Within Interval (µs)
1	1	64.600	15.000000	---	---	373.000
2	2	95.900	15.000000	1430.000	---	66.000
3	2	54.800	15.000000	1287.000	---	696.000
4	2	63.800	15.000000	1654.000	---	597.000
5	2	55.100	15.000000	1400.000	---	517.000
6	2	92.900	15.000000	1849.000	---	259.000
7	3	56.500	15.000000	1000.000	1682.000	660.000
8	1	61.700	15.000000	---	---	591.000
9	1	58.100	15.000000	---	---	474.000
10	2	95.400	15.000000	1214.000	---	1077.000
11	2	96.700	15.000000	1667.000	---	917.000

Detailed Results for Radar Type 5_Trial 6

Burst	No. of Pulses	Pulse Width (µs)	Chirp Width (MHz)	Pulse 1-to-2 Spacing (µs)	Pulse 2-to-3 Spacing (µs)	Starting Location Within Interval (µs)
1	2	69.200	20.000000	1589.000	---	608.000
2	2	96.300	20.000000	1096.000	---	1107.000
3	2	65.100	20.000000	973.000	---	1251.000
4	3	82.700	20.000000	1229.000	1116.000	442.000
5	1	86.700	20.000000	---	---	528.000
6	1	50.500	20.000000	---	---	261.000
7	2	74.700	20.000000	1296.000	---	317.000
8	1	58.000	20.000000	---	---	131.000
9	3	82.600	20.000000	1463.000	985.000	1132.000

Detailed Results for Radar Type 5_Trial 7

Burst	No. of Pulses	Pulse Width (µs)	Chirp Width (MHz)	Pulse 1-to-2 Spacing (µs)	Pulse 2-to-3 Spacing (µs)	Starting Location Within Interval (µs)
1	2	70.500	17.000000	956.000	---	247.000
2	3	85.800	17.000000	1726.000	1051.000	659.000
3	2	67.600	17.000000	1910.000	---	383.000
4	2	97.900	17.000000	1794.000	---	123.000
5	3	55.000	17.000000	1798.000	1000.000	48.000
6	2	55.900	17.000000	1322.000	---	464.000
7	3	53.400	17.000000	1270.000	1431.000	347.000
8	2	88.300	17.000000	1417.000	---	544.000
9	2	95.600	17.000000	1228.000	---	453.000
10	2	70.400	17.000000	1039.000	---	291.000
11	2	53.000	17.000000	1860.000	---	689.000
12	1	80.600	17.000000	---	---	628.000
13	3	67.000	17.000000	1382.000	1724.000	487.000
14	2	67.300	17.000000	1895.000	---	682.000
15	2	63.100	17.000000	1171.000	---	343.000
16	2	79.400	17.000000	1369.000	---	186.000

TEST RESULTS (Cont.):	

Detailed Results for Radar Type 5_Trial 8

Burst	No. of Pulses	Pulse Width (µs)	Chirp Width (MHz)	Pulse 1-to-2 Spacing (µs)	Pulse 2-to-3 Spacing (µs)	Starting Location Within Interval (µs)
1	2	52.100	18.000000	1215.000	---	17.000
2	3	99.800	18.000000	1736.000	1673.000	148.000
3	2	53.200	18.000000	1233.000	---	12.000
4	1	87.200	18.000000	---	---	540.000
5	2	75.200	18.000000	975.000	---	618.000
6	3	63.600	18.000000	1614.000	1448.000	732.000
7	2	61.200	18.000000	1118.000	---	137.000
8	2	86.400	18.000000	1014.000	---	331.000
9	2	79.400	18.000000	1910.000	---	737.000
10	2	84.300	18.000000	1126.000	---	48.000
11	2	81.500	18.000000	1345.000	---	288.000
12	3	81.300	18.000000	1810.000	952.000	529.000
13	2	94.900	18.000000	1306.000	---	612.000
14	3	69.600	18.000000	1632.000	1730.000	692.000
15	3	73.300	18.000000	1015.000	1552.000	317.000
16	3	93.100	18.000000	1179.000	1533.000	7.000

Detailed Results for Radar Type 5_Trial 9

Burst	No. of Pulses	Pulse Width (µs)	Chirp Width (MHz)	Pulse 1-to-2 Spacing (µs)	Pulse 2-to-3 Spacing (µs)	Starting Location Within Interval (µs)
1	2	58.200	10.000000	1320.000	---	122.000
2	2	66.300	10.000000	1849.000	---	244.000
3	3	62.100	10.000000	1589.000	1390.000	229.000
4	2	74.300	10.000000	1184.000	---	976.000
5	1	58.600	10.000000	---	---	730.000
6	3	82.600	10.000000	1633.000	1513.000	669.000
7	1	73.100	10.000000	---	---	735.000
8	1	90.900	10.000000	---	---	645.000
9	3	66.300	10.000000	1563.000	1348.000	380.000
10	2	54.800	10.000000	1384.000	---	556.000
11	3	65.600	10.000000	1218.000	937.000	801.000
12	3	74.500	10.000000	958.000	1010.000	493.000

TEST RESULTS (Cont.):	

Detailed Results for Radar Type 5_Trial 10

Burst	No. of Pulses	Pulse Width (µs)	Chirp Width (MHz)	Pulse 1-to-2 Spacing (µs)	Pulse 2-to-3 Spacing (µs)	Starting Location Within Interval (µs)
1	2	80.800	17.000000	1865.000	---	407.000
2	2	65.200	17.000000	1617.000	---	541.000
3	2	55.500	17.000000	1012.000	---	474.000
4	2	97.400	17.000000	1402.000	---	157.000
5	2	70.500	17.000000	1522.000	---	531.000
6	2	84.400	17.000000	1207.000	---	573.000
7	3	86.000	17.000000	1566.000	1277.000	121.000
8	2	76.800	17.000000	1481.000	---	136.000
9	2	87.400	17.000000	993.000	---	227.000
10	2	56.300	17.000000	1384.000	---	27.000
11	3	86.700	17.000000	920.000	1181.000	224.000
12	3	81.000	17.000000	959.000	1111.000	506.000
13	2	50.500	17.000000	1891.000	---	173.000
14	2	92.000	17.000000	1263.000	---	553.000
15	2	62.200	17.000000	1469.000	---	311.000
16	2	69.400	17.000000	1007.000	---	332.000
17	3	65.600	17.000000	1335.000	1823.000	519.000
18	2	70.300	17.000000	1590.000	---	96.000
19	3	78.100	17.000000	1361.000	1775.000	12.000

Detailed Results for Radar Type 5_Trial 11

Burst	No. of Pulses	Pulse Width (µs)	Chirp Width (MHz)	Pulse 1-to-2 Spacing (µs)	Pulse 2-to-3 Spacing (µs)	Starting Location Within Interval (µs)
1	2	78.300	8.000000	1113.000	---	442.000
2	3	73.800	8.000000	1354.000	1837.000	373.000
3	3	76.100	8.000000	1355.000	1639.000	48.000
4	3	87.300	8.000000	1498.000	1822.000	357.000
5	1	50.900	8.000000	---	---	161.000
6	2	69.700	8.000000	1619.000	---	132.000
7	3	76.000	8.000000	1288.000	1532.000	644.000
8	2	60.600	8.000000	1300.000	---	48.000
9	1	98.100	8.000000	---	---	403.000
10	2	52.200	8.000000	1422.000	---	506.000
11	2	98.400	8.000000	1351.000	---	22.000
12	2	87.700	8.000000	1180.000	---	634.000
13	3	82.400	8.000000	1704.000	1848.000	28.000
14	3	68.900	8.000000	1080.000	1341.000	12.000
15	2	71.600	8.000000	1681.000	---	577.000
16	3	93.100	8.000000	1758.000	1536.000	609.000
17	2	52.100	8.000000	1941.000	---	612.000
18	2	89.200	8.000000	966.000	---	60.000

TEST RESULTS (Cont.):	

Detailed Results for Radar Type 5_Trial 12

Burst	No. of Pulses	Pulse Width (µs)	Chirp Width (MHz)	Pulse 1-to-2 Spacing (µs)	Pulse 2-to-3 Spacing (µs)	Starting Location Within Interval (µs)
1	1	51.100	19.000000	---	---	551.000
2	2	85.100	19.000000	1734.000	---	404.000
3	3	52.100	19.000000	1720.000	1874.000	512.000
4	1	74.000	19.000000	---	---	40.000
5	2	52.100	19.000000	1849.000	---	96.000
6	2	76.700	19.000000	1657.000	---	349.000
7	1	55.400	19.000000	---	---	91.000
8	3	81.200	19.000000	1796.000	1552.000	89.000
9	2	60.900	19.000000	1713.000	---	57.000
10	2	57.100	19.000000	1611.000	---	530.000
11	2	50.100	19.000000	1364.000	---	248.000
12	1	89.400	19.000000	---	---	296.000
13	3	64.500	19.000000	1437.000	1500.000	469.000
14	2	72.500	19.000000	1415.000	---	437.000
15	3	72.200	19.000000	1705.000	1577.000	554.000
16	2	87.800	19.000000	1175.000	---	48.000
17	2	91.300	19.000000	1613.000	---	537.000
18	2	65.400	19.000000	1307.000	---	194.000
19	1	56.300	19.000000	---	---	276.000
20	2	68.900	19.000000	1611.000	---	430.000

Detailed Results for Radar Type 5_Trial 13

Burst	No. of Pulses	Pulse Width (µs)	Chirp Width (MHz)	Pulse 1-to-2 Spacing (µs)	Pulse 2-to-3 Spacing (µs)	Starting Location Within Interval (µs)
1	2	97.500	12.000000	1544.000	---	99.000
2	2	65.600	12.000000	1375.000	---	550.000
3	1	68.300	12.000000	---	---	550.000
4	3	50.300	12.000000	1878.000	1651.000	1131.000
5	3	51.700	12.000000	975.000	1518.000	102.000
6	3	57.200	12.000000	1700.000	1447.000	1041.000
7	2	98.400	12.000000	1637.000	---	130.000
8	3	58.900	12.000000	1602.000	1161.000	38.000
9	2	60.100	12.000000	984.000	---	333.000

TEST RESULTS (Cont.):	

Detailed Results for Radar Type 5_Trial 14

Burst	No. of Pulses	Pulse Width (µs)	Chirp Width (MHz)	Pulse 1-to-2 Spacing (µs)	Pulse 2-to-3 Spacing (µs)	Starting Location Within Interval (µs)
1	1	93.100	11.000000	---	---	422.000
2	3	61.300	11.000000	1194.000	1086.000	738.000
3	3	57.000	11.000000	1918.000	1102.000	523.000
4	3	91.800	11.000000	1588.000	1798.000	874.000
5	3	88.600	11.000000	1491.000	1061.000	748.000
6	3	62.400	11.000000	1019.000	1144.000	525.000
7	3	88.000	11.000000	1259.000	1713.000	641.000
8	2	77.700	11.000000	1025.000	---	383.000
9	1	51.800	11.000000	---	---	554.000
10	1	55.900	11.000000	---	---	939.000
11	3	63.700	11.000000	1503.000	1789.000	182.000

Detailed Results for Radar Type 5_Trial 15

Burst	No. of Pulses	Pulse Width (µs)	Chirp Width (MHz)	Pulse 1-to-2 Spacing (µs)	Pulse 2-to-3 Spacing (µs)	Starting Location Within Interval (µs)
1	2	77.900	16.000000	1250.000	---	478.000
2	2	69.500	16.000000	1007.000	---	962.000
3	2	74.500	16.000000	1631.000	---	657.000
4	1	93.900	16.000000	---	---	564.000
5	2	55.400	16.000000	949.000	---	59.000
6	3	50.400	16.000000	1162.000	1396.000	565.000
7	1	68.600	16.000000	---	---	732.000
8	3	88.700	16.000000	1750.000	1835.000	872.000
9	2	54.900	16.000000	1869.000	---	32.000
10	3	51.000	16.000000	970.000	1344.000	750.000
11	3	86.500	16.000000	1599.000	1682.000	364.000

Detailed Results for Radar Type 5_Trial 16

Burst	No. of Pulses	Pulse Width (µs)	Chirp Width (MHz)	Pulse 1-to-2 Spacing (µs)	Pulse 2-to-3 Spacing (µs)	Starting Location Within Interval
1	1	84.500	5.000000	---	---	77.000
2	2	85.100	5.000000	1049.000	---	561.000
3	2	77.500	5.000000	1012.000	---	322.000
4	2	95.300	5.000000	1524.000	---	591.000
5	2	69.000	5.000000	1447.000	---	479.000
6	2	65.200	5.000000	1574.000	---	177.000
7	3	77.400	5.000000	1446.000	1628.000	4.000
8	2	58.000	5.000000	1737.000	---	631.000
9	3	58.500	5.000000	1714.000	1626.000	330.000
10	1	98.600	5.000000	---	---	508.000
11	1	73.900	5.000000	---	---	27.000
12	1	67.700	5.000000	---	---	157.000
13	1	99.000	5.000000	---	---	313.000
14	2	76.800	5.000000	1232.000	---	429.000
15	2	89.900	5.000000	1618.000	---	574.000
16	3	88.000	5.000000	1587.000	1221.000	326.000
17	1	55.100	5.000000	---	---	550.000
18	3	93.900	5.000000	930.000	1084.000	275.000

TEST RESULTS (Cont.):	

Detailed Results for Radar Type 5_Trial 17

Burst	No. of Pulses	Pulse Width (µs)	Chirp Width (MHz)	Pulse 1-to-2 Spacing (µs)	Pulse 2-to-3 Spacing (µs)	Starting Location Within Interval (µs)
1	2	69.400	19.000000	1872.000	---	221.000
2	2	59.100	19.000000	1839.000	---	120.000
3	3	76.800	19.000000	1911.000	981.000	550.000
4	2	70.500	19.000000	1328.000	---	331.000
5	1	63.100	19.000000	---	---	681.000
6	3	59.900	19.000000	1048.000	1055.000	264.000
7	2	50.000	19.000000	1246.000	---	301.000
8	2	53.200	19.000000	993.000	---	222.000
9	1	80.500	19.000000	---	---	496.000
10	2	86.900	19.000000	1135.000	---	371.000
11	3	99.000	19.000000	1818.000	935.000	639.000
12	3	85.200	19.000000	1495.000	1079.000	633.000
13	3	68.700	19.000000	1289.000	1482.000	99.000
14	2	85.700	19.000000	1340.000	---	358.000
15	2	82.900	19.000000	1395.000	---	502.000
16	2	53.400	19.000000	1111.000	---	74.000
17	2	97.400	19.000000	1764.000	---	476.000

Detailed Results for Radar Type 5_Trial 18

Burst	No. of Pulses	Pulse Width (µs)	Chirp Width (MHz)	Pulse 1-to-2 Spacing (µs)	Pulse 2-to-3 Spacing (µs)	Starting Location Within Interval (µs)
1	2	50.800	18.000000	1595.000	---	21.000
2	2	52.000	18.000000	1563.000	---	729.000
3	2	58.800	18.000000	1384.000	---	15.000
4	2	79.700	18.000000	979.000	---	261.000
5	1	69.500	18.000000	---	---	533.000
6	2	98.900	18.000000	1015.000	---	493.000
7	2	82.800	18.000000	1634.000	---	218.000
8	1	70.100	18.000000	---	---	1102.000
9	2	89.200	18.000000	1357.000	---	524.000

Detailed Results for Radar Type 5_Trial 19

Burst	No. of Pulses	Pulse Width (µs)	Chirp Width (MHz)	Pulse 1-to-2 Spacing (µs)	Pulse 2-to-3 Spacing (µs)	Starting Location Within Interval (µs)
1	3	66.400	15.000000	1599.000	1875.000	190.000
2	1	73.600	15.000000	---	---	165.000
3	2	55.200	15.000000	1726.000	---	332.000
4	2	62.700	15.000000	1752.000	---	117.000
5	3	50.600	15.000000	1523.000	1052.000	572.000
6	2	57.800	15.000000	944.000	---	746.000
7	3	98.000	15.000000	1343.000	1215.000	147.000
8	2	82.800	15.000000	1182.000	---	30.000
9	2	62.900	15.000000	1549.000	---	395.000
10	2	50.700	15.000000	1196.000	---	333.000
11	3	69.200	15.000000	1106.000	1036.000	388.000
12	3	60.900	15.000000	1175.000	1183.000	612.000
13	2	78.500	15.000000	1908.000	---	125.000
14	2	67.800	15.000000	1667.000	---	502.000
15	2	58.000	15.000000	1869.000	---	224.000

TEST RESULTS (Cont.):	

Detailed Results for Radar Type 5_Trial 20

Burst	No. of Pulses	Pulse Width (µs)	Chirp Width (MHz)	Pulse 1-to-2 Spacing (µs)	Pulse 2-to-3 Spacing (µs)	Starting Location Within Interval (µs)
1	3	56.900	7.000000	1444.000	967.000	453.000
2	3	59.600	7.000000	1787.000	1144.000	206.000
3	3	95.100	7.000000	1708.000	1109.000	579.000
4	1	90.100	7.000000	---	---	554.000
5	1	81.600	7.000000	---	---	140.000
6	2	78.100	7.000000	1096.000	---	407.000
7	1	99.000	7.000000	---	---	350.000
8	3	81.300	7.000000	1461.000	1547.000	552.000
9	2	54.900	7.000000	1737.000	---	501.000
10	2	54.200	7.000000	1388.000	---	121.000
11	2	86.200	7.000000	971.000	---	397.000
12	2	79.100	7.000000	1117.000	---	318.000
13	2	55.200	7.000000	1399.000	---	427.000
14	1	57.800	7.000000	---	---	441.000
15	2	56.500	7.000000	1323.000	---	397.000
16	1	57.200	7.000000	---	---	435.000
17	2	71.400	7.000000	989.000	---	500.000
18	2	75.000	7.000000	1489.000	---	16.000
19	1	94.000	7.000000	---	---	44.000
20	3	72.700	7.000000	1153.000	1688.000	262.000

Detailed Results for Radar Type 5_Trial 21

Burst	No. of Pulses	Pulse Width (µs)	Chirp Width (MHz)	Pulse 1-to-2 Spacing (µs)	Pulse 2-to-3 Spacing (µs)	Starting Location Within Interval (µs)
1	3	76.300	6.000000	1673.000	1870.000	757.000
2	1	85.600	6.000000	---	---	712.000
3	2	87.400	6.000000	1495.000	---	427.000
4	2	67.800	6.000000	1430.000	---	153.000
5	1	80.900	6.000000	---	---	197.000
6	1	80.300	6.000000	---	---	160.000
7	3	86.500	6.000000	1329.000	1212.000	509.000
8	1	96.300	6.000000	---	---	828.000
9	1	80.800	6.000000	---	---	306.000
10	2	74.900	6.000000	1636.000	---	609.000
11	3	60.400	6.000000	1278.000	1394.000	269.000
12	3	57.300	6.000000	1719.000	999.000	826.000
13	2	64.800	6.000000	1378.000	---	41.000
14	2	66.600	6.000000	933.000	---	631.000

TEST RESULTS (Cont.):	

Detailed Results for Radar Type 5_Trial 22

Burst	No. of Pulses	Pulse Width (µs)	Chirp Width (MHz)	Pulse 1-to-2 Spacing (µs)	Pulse 2-to-3 Spacing (µs)	Starting Location Within Interval (µs)
1	2	69.000	7.000000	1220.000	---	20.000
2	3	88.500	7.000000	1376.000	1096.000	45.000
3	2	56.300	7.000000	1207.000	---	779.000
4	2	88.800	7.000000	1793.000	---	532.000
5	1	78.600	7.000000	---	---	577.000
6	2	82.300	7.000000	1534.000	---	549.000
7	1	71.700	7.000000	---	---	612.000
8	2	52.800	7.000000	1891.000	---	631.000
9	1	66.100	7.000000	---	---	166.000
10	2	72.800	7.000000	1460.000	---	381.000
11	2	82.900	7.000000	1293.000	---	451.000
12	3	72.300	7.000000	1224.000	1577.000	61.000
13	2	91.900	7.000000	1281.000	---	619.000
14	3	82.400	7.000000	1570.000	1469.000	99.000

Detailed Results for Radar Type 5_Trial 23

Burst	No. of Pulses	Pulse Width (µs)	Chirp Width (MHz)	Pulse 1-to-2 Spacing (µs)	Pulse 2-to-3 Spacing (µs)	Starting Location Within Interval (µs)
1	3	53.000	16.000000	1731.000	1776.000	102.000
2	2	61.000	16.000000	988.000	---	570.000
3	1	59.900	16.000000	---	---	566.000
4	1	85.500	16.000000	---	---	213.000
5	3	94.800	16.000000	1100.000	1674.000	103.000
6	3	81.600	16.000000	979.000	1275.000	44.000
7	1	57.300	16.000000	---	---	498.000
8	2	93.800	16.000000	999.000	---	772.000
9	2	75.100	16.000000	1593.000	---	686.000
10	3	96.400	16.000000	1515.000	1372.000	320.000
11	2	59.600	16.000000	1224.000	---	9.000
12	2	69.600	16.000000	1553.000	---	192.000
13	1	84.300	16.000000	---	---	102.000
14	3	70.600	16.000000	1234.000	961.000	644.000
15	1	97.700	16.000000	---	---	436.000

TEST RESULTS (Cont.):	

Detailed Results for Radar Type 5_Trial 24

Burst	No. of Pulses	Pulse Width (µs)	Chirp Width (MHz)	Pulse 1-to-2 Spacing (µs)	Pulse 2-to-3 Spacing (µs)	Starting Location Within Interval (µs)
1	2	97.100	19.000000	1539.000	---	378.000
2	2	62.500	19.000000	1931.000	---	586.000
3	3	85.200	19.000000	1860.000	942.000	473.000
4	2	57.800	19.000000	1401.000	---	394.000
5	1	72.100	19.000000	---	---	254.000
6	1	92.700	19.000000	---	---	242.000
7	2	56.200	19.000000	1405.000	---	411.000
8	3	54.300	19.000000	1382.000	1712.000	591.000
9	3	88.200	19.000000	1026.000	1680.000	17.000
10	3	68.200	19.000000	1051.000	1804.000	269.000
11	2	91.600	19.000000	1080.000	---	315.000
12	2	94.700	19.000000	1056.000	---	501.000
13	2	60.900	19.000000	1566.000	---	227.000
14	2	57.700	19.000000	1345.000	---	332.000
15	2	80.500	19.000000	1002.000	---	131.000
16	1	78.700	19.000000	---	---	51.000
17	2	95.800	19.000000	1851.000	---	346.000
18	3	74.500	19.000000	1430.000	1097.000	108.000
19	3	65.700	19.000000	1155.000	1430.000	508.000

Detailed Results for Radar Type 5_Trial 25

Burst	No. of Pulses	Pulse Width (µs)	Chirp Width (MHz)	Pulse 1-to-2 Spacing (µs)	Pulse 2-to-3 Spacing (µs)	Starting Location Within Interval (µs)
1	2	57.400	6.000000	963.000	---	180.000
2	2	93.600	6.000000	1584.000	---	459.000
3	2	80.100	6.000000	1493.000	---	435.000
4	1	64.100	6.000000	---	---	1256.000
5	2	67.700	6.000000	1215.000	---	734.000
6	1	96.500	6.000000	---	---	1281.000
7	2	81.500	6.000000	974.000	---	1432.000
8	2	66.800	6.000000	1558.000	---	92.000

TEST RESULTS (Cont.):	

Detailed Results for Radar Type 5_Trial 26

Burst	No. of Pulses	Pulse Width (µs)	Chirp Width (MHz)	Pulse 1-to-2 Spacing (µs)	Pulse 2-to-3 Spacing (µs)	Starting Location Within Interval (µs)
1	1	85.200	14.000000	---	---	99.000
2	3	59.000	14.000000	1887.000	1086.000	687.000
3	1	51.000	14.000000	---	---	381.000
4	2	84.800	14.000000	1906.000	---	520.000
5	3	83.200	14.000000	1466.000	1170.000	910.000
6	3	92.300	14.000000	977.000	1255.000	1.000
7	2	59.400	14.000000	1674.000	---	732.000
8	2	90.700	14.000000	1058.000	---	642.000
9	3	93.100	14.000000	961.000	934.000	359.000
10	3	74.900	14.000000	1673.000	1639.000	602.000
11	2	90.800	14.000000	1227.000	---	430.000
12	3	58.500	14.000000	1625.000	1374.000	10.000
13	1	57.700	14.000000	---	---	804.000

Detailed Results for Radar Type 5_Trial 27

Burst	No. of Pulses	Pulse Width (µs)	Chirp Width (MHz)	Pulse 1-to-2 Spacing (µs)	Pulse 2-to-3 Spacing (µs)	Starting Location Within Interval (µs)
1	1	66.600	20.000000	---	---	330.000
2	1	74.500	20.000000	---	---	248.000
3	2	68.200	20.000000	1149.000	---	80.000
4	2	70.100	20.000000	1849.000	---	536.000
5	3	65.800	20.000000	1316.000	1180.000	623.000
6	3	82.100	20.000000	1690.000	1661.000	503.000
7	2	95.900	20.000000	1840.000	---	687.000
8	1	51.100	20.000000	---	---	107.000
9	2	99.600	20.000000	1035.000	---	389.000
10	1	59.600	20.000000	---	---	424.000
11	3	96.000	20.000000	1733.000	1820.000	427.000
12	3	64.400	20.000000	1553.000	1679.000	204.000
13	2	82.800	20.000000	1451.000	---	69.000
14	2	86.800	20.000000	1508.000	---	573.000
15	2	76.300	20.000000	1738.000	---	361.000
16	2	83.800	20.000000	1152.000	---	683.000

TEST RESULTS (Cont.):	

Detailed Results for Radar Type 5_Trial 28

Burst	No. of Pulses	Pulse Width (µs)	Chirp Width (MHz)	Pulse 1-to-2 Spacing (µs)	Pulse 2-to-3 Spacing (µs)	Starting Location Within Interval (µs)
1	3	52.300	11.000000	1799.000	1297.000	737.000
2	3	53.600	11.000000	1397.000	1860.000	189.000
3	1	59.200	11.000000	---	---	495.000
4	3	54.300	11.000000	1885.000	1319.000	152.000
5	1	75.600	11.000000	---	---	76.000
6	1	52.900	11.000000	---	---	190.000
7	1	97.700	11.000000	---	---	195.000
8	2	50.200	11.000000	1276.000	---	604.000
9	3	95.000	11.000000	1526.000	1582.000	267.000
10	3	77.500	11.000000	1494.000	1729.000	842.000
11	1	66.900	11.000000	---	---	144.000
12	2	96.100	11.000000	1441.000	---	435.000
13	3	62.500	11.000000	1037.000	1474.000	262.000
14	2	53.100	11.000000	1278.000	---	525.000

Detailed Results for Radar Type 5_Trial 29

Burst	No. of Pulses	Pulse Width (µs)	Chirp Width (MHz)	Pulse 1-to-2 Spacing (µs)	Pulse 2-to-3 Spacing (µs)	Starting Location Within Interval (µs)
1	2	52.400	9.000000	974.000	---	609.000
2	2	55.800	9.000000	1319.000	---	738.000
3	2	58.000	9.000000	1056.000	---	899.000
4	2	50.700	9.000000	975.000	---	575.000
5	1	54.600	9.000000	---	---	73.000
6	2	82.900	9.000000	1205.000	---	107.000
7	2	51.100	9.000000	991.000	---	451.000
8	2	94.700	9.000000	1862.000	---	331.000
9	2	65.500	9.000000	1034.000	---	871.000
10	2	62.000	9.000000	1226.000	---	12.000
11	3	65.600	9.000000	1015.000	1040.000	157.000
12	2	54.800	9.000000	1350.000	---	641.000
13	2	68.900	9.000000	1496.000	---	791.000

TEST RESULTS (Cont.):	

Detailed Results for Radar Type 5_Trial 30

Burst	No. of Pulses	Pulse Width (µs)	Chirp Width (MHz)	Pulse 1-to-2 Spacing (µs)	Pulse 2-to-3 Spacing (µs)	Starting Location Within Interval (µs)
1	2	68.600	13.000000	1614.000	---	278.000
2	3	78.700	13.000000	1230.000	1429.000	455.000
3	2	72.000	13.000000	1581.000	---	173.000
4	2	75.600	13.000000	977.000	---	212.000
5	2	65.500	13.000000	1725.000	---	589.000
6	2	55.000	13.000000	1600.000	---	3.000
7	1	57.000	13.000000	---	---	642.000
8	2	70.100	13.000000	1454.000	---	556.000
9	2	52.700	13.000000	1212.000	---	448.000
10	3	61.200	13.000000	1845.000	1035.000	543.000
11	2	98.000	13.000000	1740.000	---	298.000
12	2	56.300	13.000000	1488.000	---	3.000
13	3	74.200	13.000000	1454.000	1697.000	589.000
14	1	91.600	13.000000	---	---	282.000
15	3	70.600	13.000000	1578.000	1218.000	414.000

TEST RESULTS (Cont.):	

Detailed Results for Radar Type 6

Trial Number	Pulse Width (µs)	PRI (µs)	No. of Pulses	Pulses Detected	Comment
1	1.000	300.000	9	YES	
2	1.000	300.000	9	YES	
3	1.000	300.000	9	YES	
4	1.000	300.000	9	YES	
5	1.000	300.000	9	YES	
6	1.000	300.000	9	YES	
7	1.000	300.000	9	YES	
8	1.000	300.000	9	YES	
9	1.000	300.000	9	YES	
10	1.000	300.000	9	YES	
11	1.000	300.000	9	YES	
12	1.000	300.000	9	YES	
13	1.000	300.000	9	YES	
14	1.000	300.000	9	YES	
15	1.000	300.000	9	YES	
16	1.000	300.000	9	YES	
17	1.000	300.000	9	YES	
18	1.000	300.000	9	YES	
19	1.000	300.000	9	YES	
20	1.000	300.000	9	YES	
21	1.000	300.000	9	YES	
22	1.000	300.000	9	YES	
23	1.000	300.000	9	YES	
24	1.000	300.000	9	YES	
25	1.000	300.000	9	YES	
26	1.000	300.000	9	YES	
27	1.000	300.000	9	YES	
28	1.000	300.000	9	YES	
29	1.000	300.000	9	YES	
30	1.000	300.000	9	YES	

TEST RESULTS (Cont.):	

Settings for Radar Type 1 to 4

Setting	Instrument Value
Center	5.26000 GHz
Span	Zero Span
RBW	3.000 MHz
VBW	3.000 MHz
Sweep Points	30001
Sweep time	12.000 s
Reference	-20.000 dBm
Attenuation	0.000 dB
Detector	MaxPeak
Sweep Count	1
Filter	3 dB
Trace Mode	Clear Write
Sweep type	Sweep
Preamp	off
Trigger	External
Trigger Offset	1.000 s

Settings for Long Pulse Radar Type 5

Setting	Instrument Value
Center	5.26000 GHz
Span	Zero Span
RBW	3.000 MHz
VBW	3.000 MHz
Sweep Points	30001
Sweep time	36.000 s
Reference Level	-20.000 dBm
Attenuation	0.000 dB
Detector	Max Peak
Sweep Count	1
Filter	3 dB
Trace Mode	Clear Write
Sweep type	Sweep
Preamp	off
Trigger	External
Trigger Offset	1.000 s

TEST RESULTS (Cont.):	

Settings for Radar Type 6

Setting	Instrument Value
Center	5.26000 GHz
Span	Zero Span
RBW	3.000 MHz
VBW	3.000 MHz
Sweep Points	30001
Sweep time	12.000 s
Reference	-20.000 dBm
Attenuation	0.000 dB
Detector	MaxPeak
Sweep Count	1
Filter	3 dB
Trace Mode	Clear Write
Sweep type	Sweep
Preamp	off
Trigger	External
Trigger Offset	1.000 s

Radar level verification

Description	Value	Unit
Configured DUT EIRP:	100	mW
Configured DUT PSD:	3.90	dBm/MHz
Requirement of the Detection threshold value for this given values acc. to FCC clause 5.2 / Table 3	-62	dBm
Vector Generator level setting	-3.85	dBm
Configured overall path loss from Vector Generator RF out to DUT connector of 'DUT to OSP'-cable	57.15	dB
Given additional level added to the amplitude of the waveform to account for variations in measurement equipment acc. to FCC clause 5.2 / Table 3 / Note 2	1.00	dB
This results in the following radar signal level at the DUT	-61.00	dBm

TESTED SAMPLES:	S/01
TESTED CONDITIONS MODES:	TC#01 **(ac mode 40 MHz)**
TEST RESULTS:	PASS

Measurement Summary

DUT Frequency (MHz)	Radar Type No.	Detection count	Percentage of Detection Px	Detection Limit	Overall Result	Overall Comment
5270.000000	1	30 of 30	100.00%	60.0 %	PASS	
5270.000000	2	27 of 30	90.00%	60.0 %	PASS	
5270.000000	3	25 of 30	83.33%	60.0 %	PASS	
5270.000000	4	23 of 30	76.67%	60.0 %	PASS	
5270.000000	5	30 of 30	100.00%	80.0 %	PASS	
5270.000000	6	29 of 30	96.67%	70.0 %	PASS	

Aggregate Results for Short Pulse Radar Type 1-4

Aggregate Calculation as follows	Aggregate Percentage	Aggregate Limit	Aggregate Result
(P1 + P2 + P3 + P4) / 4	87.50%	80.0 %	PASS

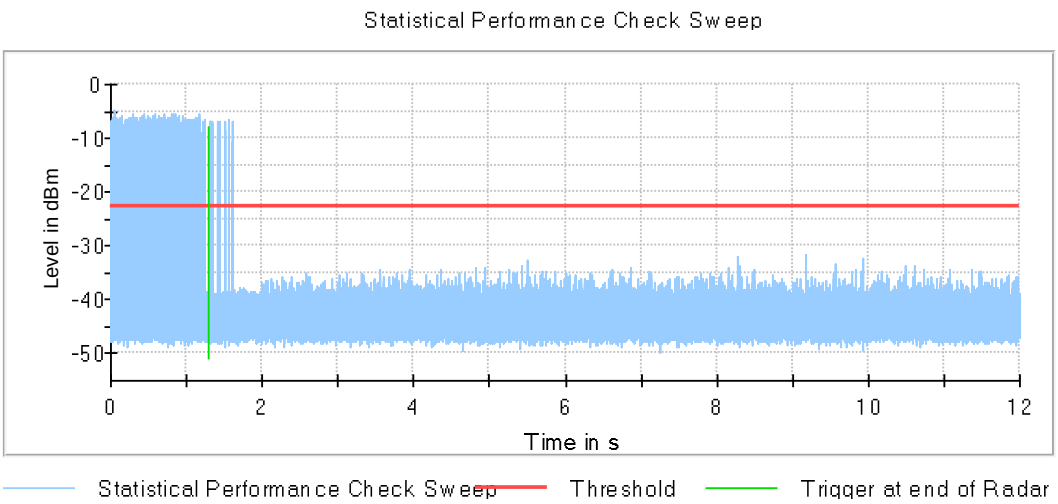

TEST RESULTS (Cont.):	

Detailed Results for Radar Type 1

Trial Number	Random Trial used	Pulse Width (µs)	PRI (µs)	No. of Pulses	Pulses Detected	Comment
1	44	1.000	2474.000	22	YES	
2	14	1.000	778.000	68	YES	
3	7	1.000	638.000	83	YES	
4	45	1.000	2572.000	21	YES	
5	23	1.000	3066.000	18	YES	
6	26	1.000	717.000	74	YES	
7	21	1.000	918.000	58	YES	
8	5	1.000	598.000	89	YES	
9	49	1.000	2962.000	18	YES	
10	4	1.000	578.000	92	YES	
11	8	1.000	658.000	81	YES	
12	36	1.000	1693.000	32	YES	
13	35	1.000	1596.000	34	YES	
14	29	1.000	1010.000	53	YES	
15	50	1.000	3060.000	18	YES	
16	42	1.000	2279.000	24	YES	
17	19	1.000	878.000	61	YES	
18	12	1.000	738.000	72	YES	
19	37	1.000	1791.000	30	YES	
20	20	1.000	898.000	59	YES	
21	2	1.000	538.000	99	YES	
22	34	1.000	1498.000	36	YES	
23	16	1.000	818.000	65	YES	
24	22	1.000	938.000	57	YES	
25	27	1.000	815.000	65	YES	
26	39	1.000	1986.000	27	YES	
27	30	1.000	1108.000	48	YES	
28	9	1.000	678.000	78	YES	
29	40	1.000	2084.000	26	YES	
30	38	1.000	1888.000	28	YES	

TEST RESULTS (Cont.):	

Detailed Results for Radar Type 2

Trial Number	Random Trial used	Pulse Width (µs)	PRI (µs)	No. of Pulses	Pulses Detected	Comment
1	30	4.200	173.000	25	YES	
2	11	1.700	224.000	23	YES	
3	35	1.200	206.000	24	YES	
4	7	1.400	185.000	27	YES	
5	3	5.000	192.000	23	YES	
6	28	1.700	216.000	27	YES	
7	15	2.200	180.000	29	No	
8	46	3.000	191.000	28	YES	
9	24	4.400	188.000	27	YES	
10	37	3.400	191.000	24	YES	
11	45	3.200	227.000	29	YES	
12	13	2.200	193.000	24	YES	
13	25	4.400	202.000	24	YES	
14	31	4.000	154.000	28	No	
15	18	2.000	153.000	24	No	
16	41	1.300	219.000	25	YES	
17	2	4.500	191.000	23	YES	
18	48	4.200	227.000	24	YES	
19	50	4.100	158.000	25	YES	
20	19	2.000	200.000	25	YES	
21	47	3.400	213.000	27	YES	
22	5	3.500	226.000	26	YES	
23	9	3.900	212.000	27	YES	
24	23	3.800	187.000	28	YES	
25	26	3.700	217.000	28	YES	
26	34	2.200	197.000	28	YES	
27	14	4.800	175.000	24	YES	
28	16	3.600	194.000	26	YES	
29	20	1.200	185.000	25	YES	
30	22	2.400	209.000	26	YES	

TEST RESULTS (Cont.):	

Detailed Results for Radar Type 3

Trial Number	Random Trial used	Pulse Width (µs)	PRI (µs)	No. of Pulses	Pulses Detected	Comment
1	15	8.100	436.000	17	YES	
2	23	9.700	256.000	16	YES	
3	12	8.000	463.000	17	YES	
4	35	7.300	200.000	18	YES	
5	16	8.900	340.000	16	No	
6	49	6.500	288.000	18	YES	
7	48	9.000	448.000	18	YES	
8	26	9.200	497.000	17	YES	
9	5	8.200	464.000	18	YES	
10	14	6.600	455.000	16	YES	
11	40	7.400	271.000	17	YES	
12	31	8.800	487.000	17	YES	
13	43	6.700	398.000	17	YES	
14	17	8.700	413.000	17	No	
15	3	9.500	297.000	16	YES	
16	4	8.300	462.000	17	YES	
17	50	7.700	206.000	17	No	
18	27	6.600	301.000	17	YES	
19	47	9.800	250.000	17	YES	
20	38	6.300	476.000	17	YES	
21	29	9.900	446.000	17	YES	
22	33	9.000	430.000	18	YES	
23	28	9.800	316.000	17	YES	
24	25	9.600	458.000	17	YES	
25	13	8.400	343.000	17	YES	
26	8	7.000	358.000	17	YES	
27	45	6.700	426.000	17	No	
28	37	7.500	217.000	17	No	
29	44	7.100	457.000	16	YES	
30	21	8.100	204.000	17	YES	

TEST RESULTS (Cont.):	

Detailed Results for Radar Type 4

Trial Number	Random Trial used	Pulse Width (µs)	PRI (µs)	No. of Pulses	Pulses Detected	Comment
1	16	19.900	366.000	14	YES	
2	32	12.600	293.000	15	YES	
3	14	16.600	212.000	16	YES	
4	44	17.900	458.000	14	No	
5	40	13.600	237.000	15	YES	
6	49	11.100	396.000	13	YES	
7	24	18.100	397.000	14	YES	
8	29	17.300	287.000	16	YES	
9	45	16.700	419.000	16	YES	
10	17	17.100	308.000	15	No	
11	37	18.100	200.000	15	No	
12	36	12.500	413.000	14	YES	
13	7	18.600	236.000	12	YES	
14	28	13.000	309.000	14	YES	
15	47	17.700	416.000	12	YES	
16	8	14.100	283.000	15	YES	
17	15	14.700	324.000	13	No	
18	3	13.600	398.000	15	YES	
19	13	16.000	485.000	14	YES	
20	5	14.100	478.000	15	YES	
21	25	16.600	282.000	16	YES	
22	30	11.800	384.000	14	No	
23	38	15.500	451.000	15	YES	
24	35	12.600	268.000	13	YES	
25	21	11.700	483.000	16	YES	
26	46	15.300	488.000	14	YES	
27	6	18.500	499.000	13	YES	
28	34	17.300	366.000	14	No	
29	23	18.300	265.000	14	No	
30	1	15.900	410.000	13	YES	

TEST RESULTS (Cont.):	

Detailed Results for Radar Type 5

Trial Number	Random Trial used	Pulses Detected	Comment
1	30	YES	For detailed burst Data see separate table
2	16	YES	For detailed burst Data see separate table
3	4	YES	For detailed burst Data see separate table
4	11	YES	For detailed burst Data see separate table
5	19	YES	For detailed burst Data see separate table
6	9	YES	For detailed burst Data see separate table
7	15	YES	For detailed burst Data see separate table
8	25	YES	For detailed burst Data see separate table
9	45	YES	For detailed burst Data see separate table
10	47	YES	For detailed burst Data see separate table
11	10	YES	For detailed burst Data see separate table
12	49	YES	For detailed burst Data see separate table
13	13	YES	For detailed burst Data see separate table
14	34	YES	For detailed burst Data see separate table
15	37	YES	For detailed burst Data see separate table
16	44	YES	For detailed burst Data see separate table
17	3	YES	For detailed burst Data see separate table
18	5	YES	For detailed burst Data see separate table
19	50	YES	For detailed burst Data see separate table
20	31	YES	For detailed burst Data see separate table
21	2	YES	For detailed burst Data see separate table
22	24	YES	For detailed burst Data see separate table
23	20	YES	For detailed burst Data see separate table
24	6	YES	For detailed burst Data see separate table
25	36	YES	For detailed burst Data see separate table
26	43	YES	For detailed burst Data see separate table
27	12	YES	For detailed burst Data see separate table
28	39	YES	For detailed burst Data see separate table
29	27	YES	For detailed burst Data see separate table
30	22	YES	For detailed burst Data see separate table

Detailed Results for Radar Type 5_Trial 1

Burst	No. of Pulses	Pulse Width (µs)	Chirp Width (MHz)	Pulse 1-to-2 Spacing (µs)	Pulse 2-to-3 Spacing (µs)	Starting Location Within Interval
1	2	77.900	16.000000	1250.000	---	478.000
2	2	69.500	16.000000	1007.000	---	962.000
3	2	74.500	16.000000	1631.000	---	657.000
4	1	93.900	16.000000	---	---	564.000
5	2	55.400	16.000000	949.000	---	59.000
6	3	50.400	16.000000	1162.000	1396.000	565.000
7	1	68.600	16.000000	---	---	732.000
8	3	88.700	16.000000	1750.000	1835.000	872.000
9	2	54.900	16.000000	1869.000	---	32.000
10	3	51.000	16.000000	970.000	1344.000	750.000
11	3	86.500	16.000000	1599.000	1682.000	364.000

TEST RESULTS (Cont.):

Detailed Results for Radar Type 5_Trial 2

Burst	No. of Pulses	Pulse Width (µs)	Chirp Width (MHz)	Pulse 1-to-2 Spacing (µs)	Pulse 2-to-3 Spacing (µs)	Starting Location Within Interval (µs)
1	3	53.400	13.000000	1343.000	1742.000	651.000
2	1	57.300	13.000000	---	---	857.000
3	1	61.900	13.000000	---	---	567.000
4	3	60.500	13.000000	1355.000	1499.000	847.000
5	1	62.000	13.000000	---	---	1014.000
6	2	94.800	13.000000	1584.000	---	512.000
7	1	64.300	13.000000	---	---	992.000
8	3	93.200	13.000000	1157.000	1861.000	285.000
9	3	56.000	13.000000	1813.000	1900.000	1189.000
10	2	79.100	13.000000	1234.000	---	1006.000

Detailed Results for Radar Type 5_Trial 3

Burst	No. of Pulses	Pulse Width (µs)	Chirp Width (MHz)	Pulse 1-to-2 Spacing (µs)	Pulse 2-to-3 Spacing (µs)	Starting Location Within Interval (µs)
1	1	64.600	15.000000	---	---	373.000
2	2	95.900	15.000000	1430.000	---	66.000
3	2	54.800	15.000000	1287.000	---	696.000
4	2	63.800	15.000000	1654.000	---	597.000
5	2	55.100	15.000000	1400.000	---	517.000
6	2	92.900	15.000000	1849.000	---	259.000
7	3	56.500	15.000000	1000.000	1682.000	660.000
8	1	61.700	15.000000	---	---	591.000
9	1	58.100	15.000000	---	---	474.000
10	2	95.400	15.000000	1214.000	---	1077.000
11	2	96.700	15.000000	1667.000	---	917.000

Detailed Results for Radar Type 5_Trial 4

Burst	No. of Pulses	Pulse Width (µs)	Chirp Width (MHz)	Pulse 1-to-2 Spacing (µs)	Pulse 2-to-3 Spacing (µs)	Starting Location Within Interval (µs)
1	3	61.700	11.000000	1264.000	1572.000	640.000
2	3	82.600	11.000000	923.000	1387.000	439.000
3	2	74.800	11.000000	1230.000	---	16.000
4	2	77.700	11.000000	1544.000	---	613.000
5	1	80.400	11.000000	---	---	213.000
6	3	88.700	11.000000	1316.000	1461.000	568.000
7	3	78.100	11.000000	1065.000	1167.000	387.000
8	2	56.600	11.000000	1454.000	---	647.000
9	1	63.600	11.000000	---	---	285.000
10	2	73.100	11.000000	1369.000	---	189.000
11	2	67.900	11.000000	994.000	---	165.000
12	2	76.500	11.000000	1164.000	---	480.000
13	1	63.700	11.000000	---	---	28.000
14	2	70.100	11.000000	1823.000	---	516.000
15	2	90.400	11.000000	1694.000	---	561.000
16	2	87.700	11.000000	1528.000	---	420.000
17	3	77.700	11.000000	1339.000	1407.000	61.000
18	1	81.300	11.000000	---	---	67.000

TEST RESULTS (Cont.):	

Detailed Results for Radar Type 5_Trial 5

Burst	No. of Pulses	Pulse Width (µs)	Chirp Width (MHz)	Pulse 1-to-2 Spacing (µs)	Pulse 2-to-3 Spacing (µs)	Starting Location Within Interval (µs)
1	1	80.100	9.000000	---	---	183.000
2	2	59.600	9.000000	946.000	---	473.000
3	2	89.000	9.000000	1573.000	---	426.000
4	2	68.300	9.000000	1801.000	---	366.000
5	1	89.400	9.000000	---	---	250.000
6	2	64.000	9.000000	958.000	---	447.000
7	2	82.200	9.000000	1272.000	---	585.000
8	2	67.300	9.000000	1688.000	---	134.000
9	2	52.500	9.000000	1696.000	---	264.000
10	2	84.100	9.000000	1133.000	---	335.000
11	2	53.000	9.000000	1374.000	---	890.000
12	2	62.000	9.000000	1636.000	---	526.000
13	3	96.100	9.000000	1660.000	1103.000	493.000

Detailed Results for Radar Type 5_Trial 6

Burst	No. of Pulses	Pulse Width (µs)	Chirp Width (MHz)	Pulse 1-to-2 Spacing (µs)	Pulse 2-to-3 Spacing (µs)	Starting Location Within Interval (µs)
1	2	70.500	17.000000	956.000	---	247.000
2	3	85.800	17.000000	1726.000	1051.000	659.000
3	2	67.600	17.000000	1910.000	---	383.000
4	2	97.900	17.000000	1794.000	---	123.000
5	3	55.000	17.000000	1798.000	1000.000	48.000
6	2	55.900	17.000000	1322.000	---	464.000
7	3	53.400	17.000000	1270.000	1431.000	347.000
8	2	88.300	17.000000	1417.000	---	544.000
9	2	95.600	17.000000	1228.000	---	453.000
10	2	70.400	17.000000	1039.000	---	291.000
11	2	53.000	17.000000	1860.000	---	689.000
12	1	80.600	17.000000	---	---	628.000
13	3	67.000	17.000000	1382.000	1724.000	487.000
14	2	67.300	17.000000	1895.000	---	682.000
15	2	63.100	17.000000	1171.000	---	343.000
16	2	79.400	17.000000	1369.000	---	186.000

Detailed Results for Radar Type 5_Trial 7

Burst	No. of Pulses	Pulse Width (µs)	Chirp Width (MHz)	Pulse 1-to-2 Spacing (µs)	Pulse 2-to-3 Spacing (µs)	Starting Location Within Interval (µs)
1	2	50.800	18.000000	1595.000	---	21.000
2	2	52.000	18.000000	1563.000	---	729.000
3	2	58.800	18.000000	1384.000	---	15.000
4	2	79.700	18.000000	979.000	---	261.000
5	1	69.500	18.000000	---	---	533.000
6	2	98.900	18.000000	1015.000	---	493.000
7	2	82.800	18.000000	1634.000	---	218.000
8	1	70.100	18.000000	---	---	1102.000
9	2	89.200	18.000000	1357.000	---	524.000

TEST RESULTS (Cont.):	

Detailed Results for Radar Type 5_Trial 8

Burst	No. of Pulses	Pulse Width (µs)	Chirp Width (MHz)	Pulse 1-to-2 Spacing (µs)	Pulse 2-to-3 Spacing (µs)	Starting Location Within Interval (µs)
1	2	97.100	19.000000	1539.000	---	378.000
2	2	62.500	19.000000	1931.000	---	586.000
3	3	85.200	19.000000	1860.000	942.000	473.000
4	2	57.800	19.000000	1401.000	---	394.000
5	1	72.100	19.000000	---	---	254.000
6	1	92.700	19.000000	---	---	242.000
7	2	56.200	19.000000	1405.000	---	411.000
8	3	54.300	19.000000	1382.000	1712.000	591.000
9	3	88.200	19.000000	1026.000	1680.000	17.000
10	3	68.200	19.000000	1051.000	1804.000	269.000
11	2	91.600	19.000000	1080.000	---	315.000
12	2	94.700	19.000000	1056.000	---	501.000
13	2	60.900	19.000000	1566.000	---	227.000
14	2	57.700	19.000000	1345.000	---	332.000
15	2	80.500	19.000000	1002.000	---	131.000
16	1	78.700	19.000000	---	---	51.000
17	2	95.800	19.000000	1851.000	---	346.000
18	3	74.500	19.000000	1430.000	1097.000	108.000
19	3	65.700	19.000000	1155.000	1430.000	508.000

Detailed Results for Radar Type 5_Trial 9

Burst	No. of Pulses	Pulse Width (µs)	Chirp Width (MHz)	Pulse 1-to-2 Spacing (µs)	Pulse 2-to-3 Spacing (µs)	Starting Location Within Interval (µs)
1	2	52.400	9.000000	974.000	---	609.000
2	2	55.800	9.000000	1319.000	---	738.000
3	2	58.000	9.000000	1056.000	---	899.000
4	2	50.700	9.000000	975.000	---	575.000
5	1	54.600	9.000000	---	---	73.000
6	2	82.900	9.000000	1205.000	---	107.000
7	2	51.100	9.000000	991.000	---	451.000
8	2	94.700	9.000000	1862.000	---	331.000
9	2	65.500	9.000000	1034.000	---	871.000
10	2	62.000	9.000000	1226.000	---	12.000
11	3	65.600	9.000000	1015.000	1040.000	157.000
12	2	54.800	9.000000	1350.000	---	641.000
13	2	68.900	9.000000	1496.000	---	791.000

TEST RESULTS (Cont.):	

Detailed Results for Radar Type 5_Trial 10

Burst	No. of Pulses	Pulse Width (µs)	Chirp Width (MHz)	Pulse 1-to-2 Spacing (µs)	Pulse 2-to-3 Spacing (µs)	Starting Location Within Interval (µs)
1	3	53.000	16.000000	1731.000	1776.000	102.000
2	2	61.000	16.000000	988.000	---	570.000
3	1	59.900	16.000000	---	---	566.000
4	1	85.500	16.000000	---	---	213.000
5	3	94.800	16.000000	1100.000	1674.000	103.000
6	3	81.600	16.000000	979.000	1275.000	44.000
7	1	57.300	16.000000	---	---	498.000
8	2	93.800	16.000000	999.000	---	772.000
9	2	75.100	16.000000	1593.000	---	686.000
10	3	96.400	16.000000	1515.000	1372.000	320.000
11	2	59.600	16.000000	1224.000	---	9.000
12	2	69.600	16.000000	1553.000	---	192.000
13	1	84.300	16.000000	---	---	102.000
14	3	70.600	16.000000	1234.000	961.000	644.000
15	1	97.700	16.000000	---	---	436.000

Detailed Results for Radar Type 5_Trial 11

Burst	No. of Pulses	Pulse Width (µs)	Chirp Width (MHz)	Pulse 1-to-2 Spacing (µs)	Pulse 2-to-3 Spacing (µs)	Starting Location Within Interval (µs)
1	3	64.900	8.000000	1505.000	942.000	403.000
2	2	74.300	8.000000	1789.000	---	177.000
3	3	70.800	8.000000	1084.000	1077.000	477.000
4	2	89.800	8.000000	1727.000	---	39.000
5	2	93.800	8.000000	1220.000	---	581.000
6	3	71.300	8.000000	1699.000	1079.000	519.000
7	2	73.200	8.000000	1306.000	---	9.000
8	2	78.200	8.000000	1010.000	---	72.000
9	3	65.600	8.000000	1443.000	1201.000	152.000
10	2	80.300	8.000000	1521.000	---	187.000
11	1	53.000	8.000000	---	---	669.000
12	2	97.600	8.000000	1808.000	---	558.000
13	2	69.000	8.000000	1583.000	---	502.000
14	3	98.300	8.000000	1282.000	1548.000	356.000
15	3	58.000	8.000000	1058.000	1448.000	179.000
16	2	53.300	8.000000	993.000	---	253.000
17	2	78.600	8.000000	1265.000	---	413.000

TEST RESULTS (Cont.):	

Detailed Results for Radar Type 5_Trial 12

Burst	No. of Pulses	Pulse Width (µs)	Chirp Width (MHz)	Pulse 1-to-2 Spacing (µs)	Pulse 2-to-3 Spacing (µs)	Starting Location Within Interval (µs)
1	2	69.400	19.000000	1872.000	---	221.000
2	2	59.100	19.000000	1839.000	---	120.000
3	3	76.800	19.000000	1911.000	981.000	550.000
4	2	70.500	19.000000	1328.000	---	331.000
5	1	63.100	19.000000	---	---	681.000
6	3	59.900	19.000000	1048.000	1055.000	264.000
7	2	50.000	19.000000	1246.000	---	301.000
8	2	53.200	19.000000	993.000	---	222.000
9	1	80.500	19.000000	---	---	496.000
10	2	86.900	19.000000	1135.000	---	371.000
11	3	99.000	19.000000	1818.000	935.000	639.000
12	3	85.200	19.000000	1495.000	1079.000	633.000
13	3	68.700	19.000000	1289.000	1482.000	99.000
14	2	85.700	19.000000	1340.000	---	358.000
15	2	82.900	19.000000	1395.000	---	502.000
16	2	53.400	19.000000	1111.000	---	74.000
17	2	97.400	19.000000	1764.000	---	476.000

Detailed Results for Radar Type 5_Trial 13

Burst	No. of Pulses	Pulse Width (µs)	Chirp Width (MHz)	Pulse 1-to-2 Spacing (µs)	Pulse 2-to-3 Spacing (µs)	Starting Location Within Interval (µs)
1	1	51.100	19.000000	---	---	551.000
2	2	85.100	19.000000	1734.000	---	404.000
3	3	52.100	19.000000	1720.000	1874.000	512.000
4	1	74.000	19.000000	---	---	40.000
5	2	52.100	19.000000	1849.000	---	96.000
6	2	76.700	19.000000	1657.000	---	349.000
7	1	55.400	19.000000	---	---	91.000
8	3	81.200	19.000000	1796.000	1552.000	89.000
9	2	60.900	19.000000	1713.000	---	57.000
10	2	57.100	19.000000	1611.000	---	530.000
11	2	50.100	19.000000	1364.000	---	248.000
12	1	89.400	19.000000	---	---	296.000
13	3	64.500	19.000000	1437.000	1500.000	469.000
14	2	72.500	19.000000	1415.000	---	437.000
15	3	72.200	19.000000	1705.000	1577.000	554.000
16	2	87.800	19.000000	1175.000	---	48.000
17	2	91.300	19.000000	1613.000	---	537.000
18	2	65.400	19.000000	1307.000	---	194.000
19	1	56.300	19.000000	---	---	276.000
20	2	68.900	19.000000	1611.000	---	430.000

TEST RESULTS (Cont.):	

Detailed Results for Radar Type 5_Trial 14

Burst	No. of Pulses	Pulse Width (µs)	Chirp Width (MHz)	Pulse 1-to-2 Spacing (µs)	Pulse 2-to-3 Spacing (µs)	Starting Location Within Interval (µs)
1	2	68.600	13.000000	1614.000	---	278.000
2	3	78.700	13.000000	1230.000	1429.000	455.000
3	2	72.000	13.000000	1581.000	---	173.000
4	2	75.600	13.000000	977.000	---	212.000
5	2	65.500	13.000000	1725.000	---	589.000
6	2	55.000	13.000000	1600.000	---	3.000
7	1	57.000	13.000000	---	---	642.000
8	2	70.100	13.000000	1454.000	---	556.000
9	2	52.700	13.000000	1212.000	---	448.000
10	3	61.200	13.000000	1845.000	1035.000	543.000
11	2	98.000	13.000000	1740.000	---	298.000
12	2	56.300	13.000000	1488.000	---	3.000
13	3	74.200	13.000000	1454.000	1697.000	589.000
14	1	91.600	13.000000	---	---	282.000
15	3	70.600	13.000000	1578.000	1218.000	414.000

Detailed Results for Radar Type 5_Trial 15

Burst	No. of Pulses	Pulse Width (µs)	Chirp Width (MHz)	Pulse 1-to-2 Spacing (µs)	Pulse 2-to-3 Spacing (µs)	Starting Location Within Interval (µs)
1	1	84.500	5.000000	---	---	77.000
2	2	85.100	5.000000	1049.000	---	561.000
3	2	77.500	5.000000	1012.000	---	322.000
4	2	95.300	5.000000	1524.000	---	591.000
5	2	69.000	5.000000	1447.000	---	479.000
6	2	65.200	5.000000	1574.000	---	177.000
7	3	77.400	5.000000	1446.000	1628.000	4.000
8	2	58.000	5.000000	1737.000	---	631.000
9	3	58.500	5.000000	1714.000	1626.000	330.000
10	1	98.600	5.000000	---	---	508.000
11	1	73.900	5.000000	---	---	27.000
12	1	67.700	5.000000	---	---	157.000
13	1	99.000	5.000000	---	---	313.000
14	2	76.800	5.000000	1232.000	---	429.000
15	2	89.900	5.000000	1618.000	---	574.000
16	3	88.000	5.000000	1587.000	1221.000	326.000
17	1	55.100	5.000000	---	---	550.000
18	3	93.900	5.000000	930.000	1084.000	275.000

TEST RESULTS (Cont.):	

Detailed Results for Radar Type 5_Trial 16

Burst	No. of Pulses	Pulse Width (µs)	Chirp Width (MHz)	Pulse 1-to-2 Spacing (µs)	Pulse 2-to-3 Spacing (µs)	Starting Location Within Interval (µs)
1	3	75.600	14.000000	1717.000	1819.000	814.000
2	2	87.500	14.000000	1850.000	---	108.000
3	1	69.100	14.000000	---	---	310.000
4	2	55.800	14.000000	972.000	---	0.000
5	1	90.600	14.000000	---	---	277.000
6	2	87.800	14.000000	1808.000	---	20.000
7	1	74.000	14.000000	---	---	35.000
8	3	94.800	14.000000	1120.000	938.000	554.000
9	2	57.200	14.000000	1619.000	---	141.000
10	1	56.000	14.000000	---	---	595.000
11	2	99.500	14.000000	1143.000	---	262.000
12	2	66.500	14.000000	1675.000	---	557.000

Detailed Results for Radar Type 5_Trial 17

Burst	No. of Pulses	Pulse Width (µs)	Chirp Width (MHz)	Pulse 1-to-2 Spacing (µs)	Pulse 2-to-3 Spacing (µs)	Starting Location Within Interval (µs)
1	2	54.600	13.000000	1482.000	---	997.000
2	3	58.000	13.000000	1111.000	999.000	712.000
3	3	63.400	13.000000	1268.000	1709.000	269.000
4	3	67.400	13.000000	1035.000	1498.000	377.000
5	3	70.200	13.000000	1122.000	999.000	381.000
6	1	92.500	13.000000	---	---	942.000
7	3	63.900	13.000000	1233.000	1239.000	49.000
8	1	67.700	13.000000	---	---	121.000
9	2	74.700	13.000000	1791.000	---	596.000
10	2	98.000	13.000000	1740.000	---	602.000

Detailed Results for Radar Type 5_Trial 18

Burst	No. of Pulses	Pulse Width (µs)	Chirp Width (MHz)	Pulse 1-to-2 Spacing (µs)	Pulse 2-to-3 Spacing (µs)	Starting Location Within Interval (µs)
1	2	58.200	10.000000	1320.000	---	122.000
2	2	66.300	10.000000	1849.000	---	244.000
3	3	62.100	10.000000	1589.000	1390.000	229.000
4	2	74.300	10.000000	1184.000	---	976.000
5	1	58.600	10.000000	---	---	730.000
6	3	82.600	10.000000	1633.000	1513.000	669.000
7	1	73.100	10.000000	---	---	735.000
8	1	90.900	10.000000	---	---	645.000
9	3	66.300	10.000000	1563.000	1348.000	380.000
10	2	54.800	10.000000	1384.000	---	556.000
11	3	65.600	10.000000	1218.000	937.000	801.000
12	3	74.500	10.000000	958.000	1010.000	493.000

TEST RESULTS (Cont.):	

Detailed Results for Radar Type 5_Trial 19

Burst	No. of Pulses	Pulse Width (µs)	Chirp Width (MHz)	Pulse 1-to-2 Spacing (µs)	Pulse 2-to-3 Spacing (µs)	Starting Location Within Interval (µs)
1	2	63.100	5.000000	1767.000	---	49.000
2	2	54.000	5.000000	1907.000	---	76.000
3	1	74.000	5.000000	---	---	573.000
4	3	69.500	5.000000	1490.000	1185.000	440.000
5	2	62.300	5.000000	1013.000	---	645.000
6	2	52.800	5.000000	1682.000	---	178.000
7	2	90.100	5.000000	1367.000	---	171.000
8	1	86.200	5.000000	---	---	251.000
9	2	94.800	5.000000	908.000	---	307.000
10	2	66.500	5.000000	972.000	---	415.000
11	3	60.800	5.000000	1555.000	1769.000	440.000
12	2	69.200	5.000000	1364.000	---	408.000
13	2	82.600	5.000000	1077.000	---	86.000
14	3	89.600	5.000000	934.000	1096.000	215.000
15	2	87.700	5.000000	958.000	---	272.000
16	2	74.300	5.000000	1246.000	---	576.000
17	1	98.600	5.000000	---	---	262.000
18	3	82.600	5.000000	1172.000	1322.000	628.000

Detailed Results for Radar Type 5_Trial 20

Burst	No. of Pulses	Pulse Width (µs)	Chirp Width (MHz)	Pulse 1-to-2 Spacing (µs)	Pulse 2-to-3 Spacing (µs)	Starting Location Within Interval (µs)
1	2	78.100	10.000000	1102.000	---	160.000
2	2	51.400	10.000000	957.000	---	633.000
3	3	85.200	10.000000	1076.000	1386.000	363.000
4	1	96.300	10.000000	---	---	992.000
5	1	67.200	10.000000	---	---	751.000
6	3	68.900	10.000000	1284.000	1725.000	149.000
7	2	75.900	10.000000	958.000	---	690.000
8	2	87.000	10.000000	1715.000	---	512.000
9	1	88.500	10.000000	---	---	611.000
10	3	61.000	10.000000	1333.000	1179.000	361.000
11	1	57.000	10.000000	---	---	214.000
12	2	55.900	10.000000	1656.000	---	643.000

Detailed Results for Radar Type 5_Trial 21

Burst	No. of Pulses	Pulse Width (µs)	Chirp Width (MHz)	Pulse 1-to-2 Spacing (µs)	Pulse 2-to-3 Spacing (µs)	Starting Location Within Interval (µs)
1	2	66.900	16.000000	1927.000	---	308.000
2	3	68.300	16.000000	1068.000	1286.000	574.000
3	2	50.600	16.000000	1234.000	---	468.000
4	2	58.200	16.000000	1470.000	---	785.000
5	3	58.300	16.000000	1083.000	1021.000	1235.000
6	1	71.500	16.000000	---	---	91.000
7	1	67.400	16.000000	---	---	710.000
8	3	59.100	16.000000	1642.000	1231.000	561.000
9	2	66.000	16.000000	1446.000	---	628.000

TEST RESULTS (Cont.):	

Detailed Results for Radar Type 5_Trial 22

Burst	No. of Pulses	Pulse Width (µs)	Chirp Width (MHz)	Pulse 1-to-2 Spacing (µs)	Pulse 2-to-3 Spacing (µs)	Starting Location Within Interval (µs)
1	2	78.300	8.000000	1113.000	---	442.000
2	3	73.800	8.000000	1354.000	1837.000	373.000
3	3	76.100	8.000000	1355.000	1639.000	48.000
4	3	87.300	8.000000	1498.000	1822.000	357.000
5	1	50.900	8.000000	---	---	161.000
6	2	69.700	8.000000	1619.000	---	132.000
7	3	76.000	8.000000	1288.000	1532.000	644.000
8	2	60.600	8.000000	1300.000	---	48.000
9	1	98.100	8.000000	---	---	403.000
10	2	52.200	8.000000	1422.000	---	506.000
11	2	98.400	8.000000	1351.000	---	22.000
12	2	87.700	8.000000	1180.000	---	634.000
13	3	82.400	8.000000	1704.000	1848.000	28.000
14	3	68.900	8.000000	1080.000	1341.000	12.000
15	2	71.600	8.000000	1681.000	---	577.000
16	3	93.100	8.000000	1758.000	1536.000	609.000
17	2	52.100	8.000000	1941.000	---	612.000
18	2	89.200	8.000000	966.000	---	60.000

Detailed Results for Radar Type 5_Trial 23

Burst	No. of Pulses	Pulse Width (µs)	Chirp Width (MHz)	Pulse 1-to-2 Spacing (µs)	Pulse 2-to-3 Spacing (µs)	Starting Location Within Interval (µs)
1	2	69.000	7.000000	1220.000	---	20.000
2	3	88.500	7.000000	1376.000	1096.000	45.000
3	2	56.300	7.000000	1207.000	---	779.000
4	2	88.800	7.000000	1793.000	---	532.000
5	1	78.600	7.000000	---	---	577.000
6	2	82.300	7.000000	1534.000	---	549.000
7	1	71.700	7.000000	---	---	612.000
8	2	52.800	7.000000	1891.000	---	631.000
9	1	66.100	7.000000	---	---	166.000
10	2	72.800	7.000000	1460.000	---	381.000
11	2	82.900	7.000000	1293.000	---	451.000
12	3	72.300	7.000000	1224.000	1577.000	61.000
13	2	91.900	7.000000	1281.000	---	619.000
14	3	82.400	7.000000	1570.000	1469.000	99.000

TEST RESULTS (Cont.):	

Detailed Results for Radar Type 5_Trial 24

Burst	No. of Pulses	Pulse Width (µs)	Chirp Width (MHz)	Pulse 1-to-2 Spacing (µs)	Pulse 2-to-3 Spacing (µs)	Starting Location Within Interval (µs)
1	1	85.200	14.000000	---	---	99.000
2	3	59.000	14.000000	1887.000	1086.000	687.000
3	1	51.000	14.000000	---	---	381.000
4	2	84.800	14.000000	1906.000	---	520.000
5	3	83.200	14.000000	1466.000	1170.000	910.000
6	3	92.300	14.000000	977.000	1255.000	1.000
7	2	59.400	14.000000	1674.000	---	732.000
8	2	90.700	14.000000	1058.000	---	642.000
9	3	93.100	14.000000	961.000	934.000	359.000
10	3	74.900	14.000000	1673.000	1639.000	602.000
11	2	90.800	14.000000	1227.000	---	430.000
12	3	58.500	14.000000	1625.000	1374.000	10.000
13	1	57.700	14.000000	---	---	804.000

Detailed Results for Radar Type 5_Trial 25

Burst	No. of Pulses	Pulse Width (µs)	Chirp Width (MHz)	Pulse 1-to-2 Spacing (µs)	Pulse 2-to-3 Spacing (µs)	Starting Location Within Interval (µs)
1	2	74.800	8.000000	1894.000	---	41.000
2	2	95.100	8.000000	1815.000	---	443.000
3	1	95.500	8.000000	---	---	663.000
4	2	87.500	8.000000	1259.000	---	156.000
5	3	86.300	8.000000	947.000	1761.000	185.000
6	1	90.900	8.000000	---	---	246.000
7	2	51.800	8.000000	1879.000	---	166.000
8	1	92.100	8.000000	---	---	203.000
9	3	83.800	8.000000	1477.000	1851.000	570.000
10	1	51.500	8.000000	---	---	48.000
11	1	60.400	8.000000	---	---	1.000
12	3	95.800	8.000000	934.000	1424.000	382.000
13	2	79.200	8.000000	1808.000	---	537.000
14	3	79.500	8.000000	1300.000	1192.000	323.000
15	1	83.200	8.000000	---	---	343.000
16	2	98.800	8.000000	1791.000	---	560.000
17	2	50.800	8.000000	1866.000	---	659.000

TEST RESULTS (Cont.):	

Detailed Results for Radar Type 5_Trial 26

Burst	No. of Pulses	Pulse Width (µs)	Chirp Width (MHz)	Pulse 1-to-2 Spacing (µs)	Pulse 2-to-3 Spacing (µs)	Starting Location Within Interval (µs)
1	3	92.800	10.000000	1307.000	1195.000	177.000
2	2	69.200	10.000000	1264.000	---	1014.000
3	2	63.000	10.000000	1830.000	---	875.000
4	1	58.400	10.000000	---	---	470.000
5	2	74.900	10.000000	1531.000	---	184.000
6	2	76.000	10.000000	1488.000	---	679.000
7	2	50.500	10.000000	1360.000	---	296.000
8	1	82.500	10.000000	---	---	645.000
9	3	58.800	10.000000	1168.000	1620.000	345.000
10	2	70.900	10.000000	1468.000	---	205.000
11	1	72.700	10.000000	---	---	702.000

Detailed Results for Radar Type 5_Trial 27

Burst	No. of Pulses	Pulse Width (µs)	Chirp Width (MHz)	Pulse 1-to-2 Spacing (µs)	Pulse 2-to-3 Spacing (µs)	Starting Location Within Interval (µs)
1	2	80.800	17.000000	1865.000	---	407.000
2	2	65.200	17.000000	1617.000	---	541.000
3	2	55.500	17.000000	1012.000	---	474.000
4	2	97.400	17.000000	1402.000	---	157.000
5	2	70.500	17.000000	1522.000	---	531.000
6	2	84.400	17.000000	1207.000	---	573.000
7	3	86.000	17.000000	1566.000	1277.000	121.000
8	2	76.800	17.000000	1481.000	---	136.000
9	2	87.400	17.000000	993.000	---	227.000
10	2	56.300	17.000000	1384.000	---	27.000
11	3	86.700	17.000000	920.000	1181.000	224.000
12	3	81.000	17.000000	959.000	1111.000	506.000
13	2	50.500	17.000000	1891.000	---	173.000
14	2	92.000	17.000000	1263.000	---	553.000
15	2	62.200	17.000000	1469.000	---	311.000
16	2	69.400	17.000000	1007.000	---	332.000
17	3	65.600	17.000000	1335.000	1823.000	519.000
18	2	70.300	17.000000	1590.000	---	96.000
19	3	78.100	17.000000	1361.000	1775.000	12.000

TEST RESULTS (Cont.):	

Detailed Results for Radar Type 5_Trial 28

Burst	No. of Pulses	Pulse Width (µs)	Chirp Width (MHz)	Pulse 1-to-2 Spacing (µs)	Pulse 2-to-3 Spacing (µs)	Starting Location Within Interval (µs)
1	1	70.600	15.000000	---	---	302.000
2	1	74.700	15.000000	---	---	299.000
3	1	63.600	15.000000	---	---	82.000
4	2	52.100	15.000000	1812.000	---	536.000
5	1	97.500	15.000000	---	---	395.000
6	2	96.300	15.000000	1335.000	---	250.000
7	3	70.800	15.000000	1052.000	1243.000	462.000
8	3	59.600	15.000000	1059.000	1550.000	477.000
9	3	99.200	15.000000	1633.000	1572.000	254.000
10	1	53.300	15.000000	---	---	33.000
11	3	98.600	15.000000	1526.000	1428.000	564.000
12	3	89.300	15.000000	1017.000	1662.000	221.000
13	1	62.700	15.000000	---	---	248.000
14	2	70.400	15.000000	1855.000	---	232.000
15	3	61.400	15.000000	1444.000	1073.000	470.000
16	1	76.000	15.000000	---	---	441.000
17	2	90.800	15.000000	1164.000	---	195.000
18	3	65.200	15.000000	1246.000	1582.000	246.000
19	3	74.700	15.000000	928.000	1671.000	194.000
20	2	75.100	15.000000	989.000	---	83.000

Detailed Results for Radar Type 5_Trial 29

Burst	No. of Pulses	Pulse Width (µs)	Chirp Width (MHz)	Pulse 1-to-2 Spacing (µs)	Pulse 2-to-3 Spacing (µs)	Starting Location Within Interval (µs)
1	2	55.900	14.000000	1883.000	---	1025.000
2	2	64.100	14.000000	1710.000	---	849.000
3	2	77.200	14.000000	1650.000	---	136.000
4	2	96.600	14.000000	1520.000	---	468.000
5	2	98.000	14.000000	923.000	---	376.000
6	2	66.700	14.000000	1462.000	---	705.000
7	3	66.400	14.000000	1003.000	1192.000	1416.000
8	2	57.000	14.000000	1038.000	---	240.000

TEST RESULTS (Cont.):	

Detailed Results for Radar Type 5_Trial 30

Burst	No. of Pulses	Pulse Width (µs)	Chirp Width (MHz)	Pulse 1-to-2 Spacing (µs)	Pulse 2-to-3 Spacing (µs)	Starting Location Within Interval (µs)
1	1	66.600	20.000000	---	---	330.000
2	1	74.500	20.000000	---	---	248.000
3	2	68.200	20.000000	1149.000	---	80.000
4	2	70.100	20.000000	1849.000	---	536.000
5	3	65.800	20.000000	1316.000	1180.000	623.000
6	3	82.100	20.000000	1690.000	1661.000	503.000
7	2	95.900	20.000000	1840.000	---	687.000
8	1	51.100	20.000000	---	---	107.000
9	2	99.600	20.000000	1035.000	---	389.000
10	1	59.600	20.000000	---	---	424.000
11	3	96.000	20.000000	1733.000	1820.000	427.000
12	3	64.400	20.000000	1553.000	1679.000	204.000
13	2	82.800	20.000000	1451.000	---	69.000
14	2	86.800	20.000000	1508.000	---	573.000
15	2	76.300	20.000000	1738.000	---	361.000
16	2	83.800	20.000000	1152.000	---	683.000

TEST RESULTS (Cont.):	

Detailed Results for Radar Type 6

Trial Number	Pulse Width (µs)	PRI (µs)	No. of Pulses	Pulses Detected	Comment
1	1.000	300.000	9	YES	
2	1.000	300.000	9	YES	
3	1.000	300.000	9	YES	
4	1.000	300.000	9	YES	
5	1.000	300.000	9	YES	
6	1.000	300.000	9	YES	
7	1.000	300.000	9	YES	
8	1.000	300.000	9	YES	
9	1.000	300.000	9	YES	
10	1.000	300.000	9	YES	
11	1.000	300.000	9	YES	
12	1.000	300.000	9	YES	
13	1.000	300.000	9	YES	
14	1.000	300.000	9	YES	
15	1.000	300.000	9	YES	
16	1.000	300.000	9	YES	
17	1.000	300.000	9	YES	
18	1.000	300.000	9	YES	
19	1.000	300.000	9	YES	
20	1.000	300.000	9	YES	
21	1.000	300.000	9	YES	
22	1.000	300.000	9	YES	
23	1.000	300.000	9	YES	
24	1.000	300.000	9	YES	
25	1.000	300.000	9	No	
26	1.000	300.000	9	YES	
27	1.000	300.000	9	YES	
28	1.000	300.000	9	YES	
29	1.000	300.000	9	YES	
30	1.000	300.000	9	YES	

TEST RESULTS (Cont.):	

Settings for Radar Type 1 to 4

Setting	Instrument Value
Center	5.27000 GHz
Span	Zero Span
RBW	3.000 MHz
VBW	3.000 MHz
Sweep Points	30001
Sweep time	12.000 s
Reference	-20.000 dBm
Attenuation	0.000 dB
Detector	Max Peak
Sweep Count	1
Filter	3 dB
Trace Mode	Clear Write
Sweep type	Sweep
Preamp	off
Trigger	External
Trigger Offset	1.000 s

Settings for Long Pulse Radar Type 5

Setting	Instrument Value
Center	5.27000 GHz
Span	Zero Span
RBW	3.000 MHz
VBW	3.000 MHz
Sweep Points	30001
Sweep time	36.000 s
Reference Level	-20.000 dBm
Attenuation	0.000 dB
Detector	Max Peak
Sweep Count	1
Filter	3 dB
Trace Mode	Clear Write
Sweep type	Sweep
Preamp	off
Trigger	External
Trigger Offset	1.000 s

TEST RESULTS (Cont.):	

Settings for Radar Type 6

Setting	Instrument Value
Center	5.27000 GHz
Span	Zero Span
RBW	3.000 MHz
VBW	3.000 MHz
Sweep Points	30001
Sweep time	12.000 s
Reference	-20.000 dBm
Attenuation	0.000 dB
Detector	MaxPeak
Sweep Count	1
Filter	3 dB
Trace Mode	Clear Write
Sweep type	Sweep
Preamp	off
Trigger	External
Trigger Offset	1.000 s

Radar level verification

Description	Value	Unit
Configured DUT EIRP:	100	mW
Configured DUT PSD:	4.51	dBm/MHz
Requirement of the Detection threshold value for this given values acc. to FCC clause 5.2 / Table 3	-62	dBm
Vector Generator level setting	-3.87	dBm
Configured overall path loss from Vector Generator RF out to DUT connector of 'DUT to OSP'-cable	57.13	dB
Given additional level added to the amplitude of the waveform to account for variations in measurement equipment acc. to FCC clause 5.2 / Table 3 / Note 2	1.00	dB
This results in the following radar signal level at the DUT	-61.00	dBm

TESTED SAMPLES:	S/01
TESTED CONDITIONS MODES:	TC#01 **(ac mode 80 MHz)**
TEST RESULTS:	PASS

Measurement Summary

DUT Frequency (MHz)	Radar Type No.	Detection count	Percentage of Detection Px	Detection Limit	Overall Result	Overall Comment
5290.000000	1	30 of 30	100.00%	60.0 %	PASS	
5290.000000	2	30 of 30	100.00%	60.0 %	PASS	
5290.000000	3	30 of 30	100.00%	60.0 %	PASS	
5290.000000	4	30 of 30	100.00%	60.0 %	PASS	
5290.000000	5	26 of 30	86.67%	80.0 %	PASS	
5290.000000	6	30 of 30	100.00%	70.0 %	PASS	

Aggregate Results for Short Pulse Radar Type 1-4

Aggregate Calculation as follows	Aggregate Percentage	Aggregate Limit	Aggregate Result
(P1 + P2 + P3 + P4) / 4	100%	80.0 %	PASS

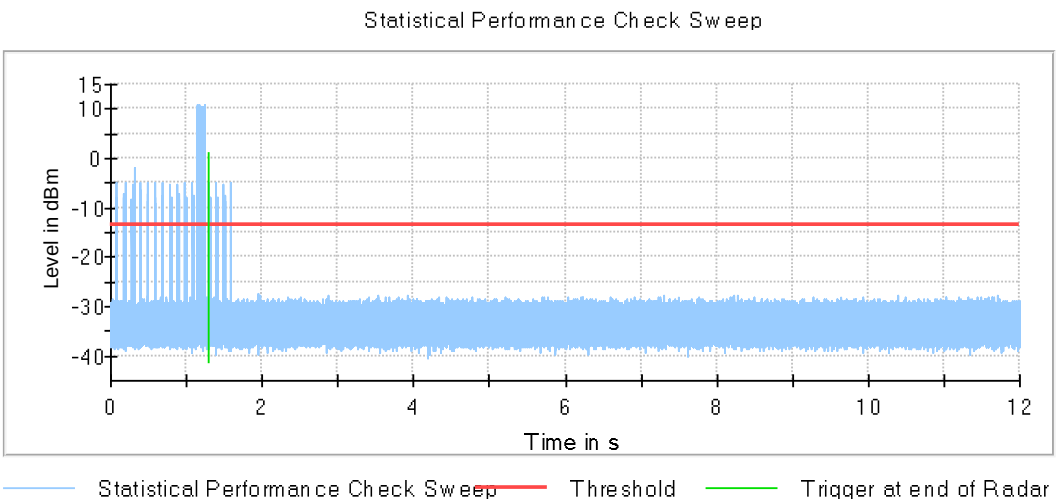

TEST RESULTS (Cont.):	

Detailed Results for Radar Type 1

Trial Number	Random Trial used	Pulse Width (µs)	PRI (µs)	No. of Pulses	Pulses Detected	Comment
1	18	1.000	858.000	62	YES	
2	16	1.000	818.000	65	YES	
3	43	1.000	2376.000	23	YES	
4	42	1.000	2279.000	24	YES	
5	20	1.000	898.000	59	YES	
6	9	1.000	678.000	78	YES	
7	4	1.000	578.000	92	YES	
8	14	1.000	778.000	68	YES	
9	34	1.000	1498.000	36	YES	
10	38	1.000	1888.000	28	YES	
11	6	1.000	618.000	86	YES	
12	50	1.000	3060.000	18	YES	
13	35	1.000	1596.000	34	YES	
14	37	1.000	1791.000	30	YES	
15	10	1.000	698.000	76	YES	
16	45	1.000	2572.000	21	YES	
17	17	1.000	838.000	63	YES	
18	41	1.000	2181.000	25	YES	
19	48	1.000	2864.000	19	YES	
20	47	1.000	2767.000	20	YES	
21	5	1.000	598.000	89	YES	
22	44	1.000	2474.000	22	YES	
23	11	1.000	718.000	74	YES	
24	32	1.000	1303.000	41	YES	
25	31	1.000	1205.000	44	YES	
26	26	1.000	717.000	74	YES	
27	49	1.000	2962.000	18	YES	
28	12	1.000	738.000	72	YES	
29	33	1.000	1400.000	38	YES	
30	36	1.000	1693.000	32	YES	

TEST RESULTS (Cont.):	

Detailed Results for Radar Type 2

Trial Number	Random Trial used	Pulse Width (µs)	PRI (µs)	No. of Pulses	Pulses Detected	Comment
1	45	3.200	227.000	29	YES	
2	16	3.600	194.000	26	YES	
3	33	2.100	228.000	28	YES	
4	4	4.700	200.000	23	YES	
5	15	2.200	180.000	29	YES	
6	14	4.800	175.000	24	YES	
7	3	5.000	192.000	23	YES	
8	6	3.700	161.000	26	YES	
9	32	3.700	222.000	26	YES	
10	44	3.500	167.000	29	YES	
11	39	4.900	163.000	23	YES	
12	20	1.200	185.000	25	YES	
13	17	4.500	213.000	23	YES	
14	22	2.400	209.000	26	YES	
15	8	2.600	175.000	26	YES	
16	28	1.700	216.000	27	YES	
17	11	1.700	224.000	23	YES	
18	40	3.600	230.000	27	YES	
19	47	3.400	213.000	27	YES	
20	48	4.200	227.000	24	YES	
21	24	4.400	188.000	27	YES	
22	42	2.500	215.000	28	YES	
23	50	4.100	158.000	25	YES	
24	46	3.000	191.000	28	YES	
25	25	4.400	202.000	24	YES	
26	27	2.700	199.000	29	YES	
27	1	3.400	168.000	25	YES	
28	2	4.500	191.000	23	YES	
29	13	2.200	193.000	24	YES	
30	10	1.200	175.000	26	YES	

TEST RESULTS (Cont.):	

Detailed Results for Radar Type 3

Trial Number	Random Trial used	Pulse Width (µs)	PRI (µs)	No. of Pulses	Pulses Detected	Comment
1	23	9.700	256.000	16	YES	
2	7	6.500	466.000	17	YES	
3	11	9.000	500.000	16	YES	
4	1	8.000	494.000	18	YES	
5	35	7.300	200.000	18	YES	
6	39	7.200	358.000	18	YES	
7	47	9.800	250.000	17	YES	
8	49	6.500	288.000	18	YES	
9	41	7.700	467.000	16	YES	
10	29	9.900	446.000	17	YES	
11	16	8.900	340.000	16	YES	
12	18	6.200	263.000	18	YES	
13	34	6.400	477.000	17	YES	
14	3	9.500	297.000	16	YES	
15	19	9.600	336.000	18	YES	
16	27	6.600	301.000	17	YES	
17	12	8.000	463.000	17	YES	
18	24	6.000	378.000	17	YES	
19	26	9.200	497.000	17	YES	
20	30	8.400	309.000	17	YES	
21	6	7.500	429.000	17	YES	
22	36	9.800	494.000	17	YES	
23	13	8.400	343.000	17	YES	
24	4	8.300	462.000	17	YES	
25	50	7.700	206.000	17	YES	
26	28	9.800	316.000	17	YES	
27	43	6.700	398.000	17	YES	
28	40	7.400	271.000	17	YES	
29	8	7.000	358.000	17	YES	
30	17	8.700	413.000	17	YES	

TEST RESULTS (Cont.):	

Detailed Results for Radar Type 4

Trial Number	Random Trial used	Pulse Width (µs)	PRI (µs)	No. of Pulses	Pulses Detected	Comment
1	23	18.300	265.000	14	YES	
2	48	14.500	433.000	12	YES	
3	2	19.900	428.000	12	YES	
4	14	16.600	212.000	16	YES	
5	3	13.600	398.000	15	YES	
6	36	12.500	413.000	14	YES	
7	12	16.000	461.000	13	YES	
8	34	17.300	366.000	14	YES	
9	41	13.300	439.000	14	YES	
10	24	18.100	397.000	14	YES	
11	15	14.700	324.000	13	YES	
12	37	18.100	200.000	15	YES	
13	21	11.700	483.000	16	YES	
14	45	16.700	419.000	16	YES	
15	19	15.700	403.000	16	YES	
16	30	11.800	384.000	14	YES	
17	38	15.500	451.000	15	YES	
18	10	14.200	351.000	12	YES	
19	49	11.100	396.000	13	YES	
20	26	18.900	299.000	16	YES	
21	42	18.500	208.000	14	YES	
22	40	13.600	237.000	15	YES	
23	50	14.400	286.000	12	YES	
24	13	16.000	485.000	14	YES	
25	47	17.700	416.000	12	YES	
26	27	15.600	303.000	13	YES	
27	7	18.600	236.000	12	YES	
28	6	18.500	499.000	13	YES	
29	1	15.900	410.000	13	YES	
30	43	15.800	410.000	15	YES	

TEST RESULTS (Cont.):	

Detailed Results for Radar Type 5

Trial Number	Random Trial used	Pulses Detected	Comment
1	21	YES	For detailed burst Data see separate table
2	8	YES	For detailed burst Data see separate table
3	23	YES	For detailed burst Data see separate table
4	11	YES	For detailed burst Data see separate table
5	50	YES	For detailed burst Data see separate table
6	12	YES	For detailed burst Data see separate table
7	9	YES	For detailed burst Data see separate table
8	43	YES	For detailed burst Data see separate table
9	33	YES	For detailed burst Data see separate table
10	25	YES	For detailed burst Data see separate table
11	13	YES	For detailed burst Data see separate table
12	28	No	For detailed burst Data see separate table
13	7	No	For detailed burst Data see separate table
14	45	YES	For detailed burst Data see separate table
15	31	YES	For detailed burst Data see separate table
16	2	YES	For detailed burst Data see separate table
17	32	YES	For detailed burst Data see separate table
18	24	No	For detailed burst Data see separate table
19	44	No	For detailed burst Data see separate table
20	19	YES	For detailed burst Data see separate table
21	10	YES	For detailed burst Data see separate table
22	17	YES	For detailed burst Data see separate table
23	5	YES	For detailed burst Data see separate table
24	38	YES	For detailed burst Data see separate table
25	39	YES	For detailed burst Data see separate table
26	6	YES	For detailed burst Data see separate table
27	3	YES	For detailed burst Data see separate table
28	46	YES	For detailed burst Data see separate table
29	20	YES	For detailed burst Data see separate table
30	27	YES	For detailed burst Data see separate table

Detailed Results for Radar Type 5_Trial 1

Burst	No. of Pulses	Pulse Width (µs)	Chirp Width (MHz)	Pulse 1-to-2 Spacing (µs)	Pulse 2-to-3 Spacing (µs)	Starting Location Within Interval
1	3	66.400	15.000000	1599.000	1875.000	190.000
2	1	73.600	15.000000	---	---	165.000
3	2	55.200	15.000000	1726.000	---	332.000
4	2	62.700	15.000000	1752.000	---	117.000
5	3	50.600	15.000000	1523.000	1052.000	572.000
6	2	57.800	15.000000	944.000	---	746.000
7	3	98.000	15.000000	1343.000	1215.000	147.000
8	2	82.800	15.000000	1182.000	---	30.000
9	2	62.900	15.000000	1549.000	---	395.000
10	2	50.700	15.000000	1196.000	---	333.000
11	3	69.200	15.000000	1106.000	1036.000	388.000
12	3	60.900	15.000000	1175.000	1183.000	612.000
13	2	78.500	15.000000	1908.000	---	125.000
14	2	67.800	15.000000	1667.000	---	502.000
15	2	58.000	15.000000	1869.000	---	224.000

TEST RESULTS (Cont.):	

Detailed Results for Radar Type 5_Trial 2

Burst	No. of Pulses	Pulse Width (µs)	Chirp Width (MHz)	Pulse 1-to-2 Spacing (µs)	Pulse 2-to-3 Spacing (µs)	Starting Location Within Interval (µs)
1	3	93.000	5.000000	1554.000	1785.000	287.000
2	1	83.900	5.000000	---	---	719.000
3	1	58.600	5.000000	---	---	22.000
4	2	51.600	5.000000	1301.000	---	508.000
5	2	86.000	5.000000	971.000	---	394.000
6	2	52.400	5.000000	1014.000	---	126.000
7	2	81.600	5.000000	1650.000	---	756.000
8	2	73.500	5.000000	1428.000	---	653.000
9	1	58.900	5.000000	---	---	761.000
10	1	93.500	5.000000	---	---	118.000
11	2	90.600	5.000000	1774.000	---	108.000
12	2	58.400	5.000000	1448.000	---	740.000
13	2	89.100	5.000000	1406.000	---	689.000
14	2	73.900	5.000000	1071.000	---	160.000
15	1	61.700	5.000000	---	---	172.000

Detailed Results for Radar Type 5_Trial 3

Burst	No. of Pulses	Pulse Width (µs)	Chirp Width (MHz)	Pulse 1-to-2 Spacing (µs)	Pulse 2-to-3 Spacing (µs)	Starting Location Within Interval (µs)
1	2	51.000	9.000000	1731.000	---	259.000
2	2	69.300	9.000000	1762.000	---	617.000
3	1	94.600	9.000000	---	---	379.000
4	2	65.100	9.000000	1536.000	---	103.000
5	3	51.100	9.000000	1546.000	1400.000	650.000
6	2	86.100	9.000000	1619.000	---	221.000
7	1	80.000	9.000000	---	---	44.000
8	1	60.800	9.000000	---	---	384.000
9	3	56.200	9.000000	1627.000	1397.000	126.000
10	1	99.700	9.000000	---	---	20.000
11	1	84.000	9.000000	---	---	411.000
12	3	83.100	9.000000	1223.000	1586.000	232.000
13	1	50.900	9.000000	---	---	179.000
14	1	53.200	9.000000	---	---	48.000
15	2	71.800	9.000000	1079.000	---	692.000
16	2	66.300	9.000000	1893.000	---	503.000
17	2	51.200	9.000000	1362.000	---	455.000

TEST RESULTS (Cont.):	

Detailed Results for Radar Type 5_Trial 4

Burst	No. of Pulses	Pulse Width (µs)	Chirp Width (MHz)	Pulse 1-to-2 Spacing (µs)	Pulse 2-to-3 Spacing (µs)	Starting Location Within Interval (µs)
1	3	61.700	11.000000	1264.000	1572.000	640.000
2	3	82.600	11.000000	923.000	1387.000	439.000
3	2	74.800	11.000000	1230.000	---	16.000
4	2	77.700	11.000000	1544.000	---	613.000
5	1	80.400	11.000000	---	---	213.000
6	3	88.700	11.000000	1316.000	1461.000	568.000
7	3	78.100	11.000000	1065.000	1167.000	387.000
8	2	56.600	11.000000	1454.000	---	647.000
9	1	63.600	11.000000	---	---	285.000
10	2	73.100	11.000000	1369.000	---	189.000
11	2	67.900	11.000000	994.000	---	165.000
12	2	76.500	11.000000	1164.000	---	480.000
13	1	63.700	11.000000	---	---	28.000
14	2	70.100	11.000000	1823.000	---	516.000
15	2	90.400	11.000000	1694.000	---	561.000
16	2	87.700	11.000000	1528.000	---	420.000
17	3	77.700	11.000000	1339.000	1407.000	61.000
18	1	81.300	11.000000	---	---	67.000

Detailed Results for Radar Type 5_Trial 5

Burst	No. of Pulses	Pulse Width (µs)	Chirp Width (MHz)	Pulse 1-to-2 Spacing (µs)	Pulse 2-to-3 Spacing (µs)	Starting Location Within Interval (µs)
1	2	63.100	5.000000	1767.000	---	49.000
2	2	54.000	5.000000	1907.000	---	76.000
3	1	74.000	5.000000	---	---	573.000
4	3	69.500	5.000000	1490.000	1185.000	440.000
5	2	62.300	5.000000	1013.000	---	645.000
6	2	52.800	5.000000	1682.000	---	178.000
7	2	90.100	5.000000	1367.000	---	171.000
8	1	86.200	5.000000	---	---	251.000
9	2	94.800	5.000000	908.000	---	307.000
10	2	66.500	5.000000	972.000	---	415.000
11	3	60.800	5.000000	1555.000	1769.000	440.000
12	2	69.200	5.000000	1364.000	---	408.000
13	2	82.600	5.000000	1077.000	---	86.000
14	3	89.600	5.000000	934.000	1096.000	215.000
15	2	87.700	5.000000	958.000	---	272.000
16	2	74.300	5.000000	1246.000	---	576.000
17	1	98.600	5.000000	---	---	262.000
18	3	82.600	5.000000	1172.000	1322.000	628.000

TEST RESULTS (Cont.):	

Detailed Results for Radar Type 5_Trial 6

Burst	No. of Pulses	Pulse Width (µs)	Chirp Width (MHz)	Pulse 1-to-2 Spacing (µs)	Pulse 2-to-3 Spacing (µs)	Starting Location Within Interval (µs)
1	2	80.800	17.000000	1865.000	---	407.000
2	2	65.200	17.000000	1617.000	---	541.000
3	2	55.500	17.000000	1012.000	---	474.000
4	2	97.400	17.000000	1402.000	---	157.000
5	2	70.500	17.000000	1522.000	---	531.000
6	2	84.400	17.000000	1207.000	---	573.000
7	3	86.000	17.000000	1566.000	1277.000	121.000
8	2	76.800	17.000000	1481.000	---	136.000
9	2	87.400	17.000000	993.000	---	227.000
10	2	56.300	17.000000	1384.000	---	27.000
11	3	86.700	17.000000	920.000	1181.000	224.000
12	3	81.000	17.000000	959.000	1111.000	506.000
13	2	50.500	17.000000	1891.000	---	173.000
14	2	92.000	17.000000	1263.000	---	553.000
15	2	62.200	17.000000	1469.000	---	311.000
16	2	69.400	17.000000	1007.000	---	332.000
17	3	65.600	17.000000	1335.000	1823.000	519.000
18	2	70.300	17.000000	1590.000	---	96.000
19	3	78.100	17.000000	1361.000	1775.000	12.000

Detailed Results for Radar Type 5_Trial 7

Burst	No. of Pulses	Pulse Width (µs)	Chirp Width (MHz)	Pulse 1-to-2 Spacing (µs)	Pulse 2-to-3 Spacing (µs)	Starting Location Within Interval (µs)
1	2	70.500	17.000000	956.000	---	247.000
2	3	85.800	17.000000	1726.000	1051.000	659.000
3	2	67.600	17.000000	1910.000	---	383.000
4	2	97.900	17.000000	1794.000	---	123.000
5	3	55.000	17.000000	1798.000	1000.000	48.000
6	2	55.900	17.000000	1322.000	---	464.000
7	3	53.400	17.000000	1270.000	1431.000	347.000
8	2	88.300	17.000000	1417.000	---	544.000
9	2	95.600	17.000000	1228.000	---	453.000
10	2	70.400	17.000000	1039.000	---	291.000
11	2	53.000	17.000000	1860.000	---	689.000
12	1	80.600	17.000000	---	---	628.000
13	3	67.000	17.000000	1382.000	1724.000	487.000
14	2	67.300	17.000000	1895.000	---	682.000
15	2	63.100	17.000000	1171.000	---	343.000
16	2	79.400	17.000000	1369.000	---	186.000

TEST RESULTS (Cont.):	

Detailed Results for Radar Type 5_Trial 8

Burst	No. of Pulses	Pulse Width (µs)	Chirp Width (MHz)	Pulse 1-to-2 Spacing (µs)	Pulse 2-to-3 Spacing (µs)	Starting Location Within Interval (µs)
1	3	92.800	10.000000	1307.000	1195.000	177.000
2	2	69.200	10.000000	1264.000	---	1014.000
3	2	63.000	10.000000	1830.000	---	875.000
4	1	58.400	10.000000	---	---	470.000
5	2	74.900	10.000000	1531.000	---	184.000
6	2	76.000	10.000000	1488.000	---	679.000
7	2	50.500	10.000000	1360.000	---	296.000
8	1	82.500	10.000000	---	---	645.000
9	3	58.800	10.000000	1168.000	1620.000	345.000
10	2	70.900	10.000000	1468.000	---	205.000
11	1	72.700	10.000000	---	---	702.000

Detailed Results for Radar Type 5_Trial 9

Burst	No. of Pulses	Pulse Width (µs)	Chirp Width (MHz)	Pulse 1-to-2 Spacing (µs)	Pulse 2-to-3 Spacing (µs)	Starting Location Within Interval (µs)
1	2	59.500	11.000000	1738.000	---	660.000
2	1	57.000	11.000000	---	---	796.000
3	2	54.400	11.000000	1891.000	---	779.000
4	2	97.500	11.000000	1566.000	---	298.000
5	3	52.000	11.000000	1941.000	1472.000	201.000
6	1	62.500	11.000000	---	---	211.000
7	2	79.100	11.000000	1016.000	---	30.000
8	2	98.600	11.000000	927.000	---	485.000
9	2	52.900	11.000000	1814.000	---	328.000
10	2	64.600	11.000000	1644.000	---	339.000
11	3	75.300	11.000000	1710.000	1296.000	500.000
12	1	74.200	11.000000	---	---	451.000
13	1	58.400	11.000000	---	---	160.000
14	1	97.500	11.000000	---	---	573.000

TEST RESULTS (Cont.):	

Detailed Results for Radar Type 5_Trial 10

Burst	No. of Pulses	Pulse Width (µs)	Chirp Width (MHz)	Pulse 1-to-2 Spacing (µs)	Pulse 2-to-3 Spacing (µs)	Starting Location Within Interval (µs)
1	2	97.100	19.000000	1539.000	---	378.000
2	2	62.500	19.000000	1931.000	---	586.000
3	3	85.200	19.000000	1860.000	942.000	473.000
4	2	57.800	19.000000	1401.000	---	394.000
5	1	72.100	19.000000	---	---	254.000
6	1	92.700	19.000000	---	---	242.000
7	2	56.200	19.000000	1405.000	---	411.000
8	3	54.300	19.000000	1382.000	1712.000	591.000
9	3	88.200	19.000000	1026.000	1680.000	17.000
10	3	68.200	19.000000	1051.000	1804.000	269.000
11	2	91.600	19.000000	1080.000	---	315.000
12	2	94.700	19.000000	1056.000	---	501.000
13	2	60.900	19.000000	1566.000	---	227.000
14	2	57.700	19.000000	1345.000	---	332.000
15	2	80.500	19.000000	1002.000	---	131.000
16	1	78.700	19.000000	---	---	51.000
17	2	95.800	19.000000	1851.000	---	346.000
18	3	74.500	19.000000	1430.000	1097.000	108.000
19	3	65.700	19.000000	1155.000	1430.000	508.000

Detailed Results for Radar Type 5_Trial 11

Burst	No. of Pulses	Pulse Width (µs)	Chirp Width (MHz)	Pulse 1-to-2 Spacing (µs)	Pulse 2-to-3 Spacing (µs)	Starting Location Within Interval (µs)
1	1	51.100	19.000000	---	---	551.000
2	2	85.100	19.000000	1734.000	---	404.000
3	3	52.100	19.000000	1720.000	1874.000	512.000
4	1	74.000	19.000000	---	---	40.000
5	2	52.100	19.000000	1849.000	---	96.000
6	2	76.700	19.000000	1657.000	---	349.000
7	1	55.400	19.000000	---	---	91.000
8	3	81.200	19.000000	1796.000	1552.000	89.000
9	2	60.900	19.000000	1713.000	---	57.000
10	2	57.100	19.000000	1611.000	---	530.000
11	2	50.100	19.000000	1364.000	---	248.000
12	1	89.400	19.000000	---	---	296.000
13	3	64.500	19.000000	1437.000	1500.000	469.000
14	2	72.500	19.000000	1415.000	---	437.000
15	3	72.200	19.000000	1705.000	1577.000	554.000
16	2	87.800	19.000000	1175.000	---	48.000
17	2	91.300	19.000000	1613.000	---	537.000
18	2	65.400	19.000000	1307.000	---	194.000
19	1	56.300	19.000000	---	---	276.000
20	2	68.900	19.000000	1611.000	---	430.000

TEST RESULTS (Cont.):	

Detailed Results for Radar Type 5_Trial 12

Burst	No. of Pulses	Pulse Width (µs)	Chirp Width (MHz)	Pulse 1-to-2 Spacing (µs)	Pulse 2-to-3 Spacing (µs)	Starting Location Within Interval (µs)
1	2	97.500	12.000000	1544.000	---	99.000
2	2	65.600	12.000000	1375.000	---	550.000
3	1	68.300	12.000000	---	---	550.000
4	3	50.300	12.000000	1878.000	1651.000	1131.000
5	3	51.700	12.000000	975.000	1518.000	102.000
6	3	57.200	12.000000	1700.000	1447.000	1041.000
7	2	98.400	12.000000	1637.000	---	130.000
8	3	58.900	12.000000	1602.000	1161.000	38.000
9	2	60.100	12.000000	984.000	---	333.000

Detailed Results for Radar Type 5_Trial 13

Burst	No. of Pulses	Pulse Width (µs)	Chirp Width (MHz)	Pulse 1-to-2 Spacing (µs)	Pulse 2-to-3 Spacing (µs)	Starting Location Within Interval (µs)
1	3	76.300	6.000000	1673.000	1870.000	757.000
2	1	85.600	6.000000	---	---	712.000
3	2	87.400	6.000000	1495.000	---	427.000
4	2	67.800	6.000000	1430.000	---	153.000
5	1	80.900	6.000000	---	---	197.000
6	1	80.300	6.000000	---	---	160.000
7	3	86.500	6.000000	1329.000	1212.000	509.000
8	1	96.300	6.000000	---	---	828.000
9	1	80.800	6.000000	---	---	306.000
10	2	74.900	6.000000	1636.000	---	609.000
11	3	60.400	6.000000	1278.000	1394.000	269.000
12	3	57.300	6.000000	1719.000	999.000	826.000
13	2	64.800	6.000000	1378.000	---	41.000
14	2	66.600	6.000000	933.000	---	631.000

TEST RESULTS (Cont.):	

Detailed Results for Radar Type 5_Trial 14

Burst	No. of Pulses	Pulse Width (µs)	Chirp Width (MHz)	Pulse 1-to-2 Spacing (µs)	Pulse 2-to-3 Spacing (µs)	Starting Location Within Interval (µs)
1	2	52.400	9.000000	974.000	---	609.000
2	2	55.800	9.000000	1319.000	---	738.000
3	2	58.000	9.000000	1056.000	---	899.000
4	2	50.700	9.000000	975.000	---	575.000
5	1	54.600	9.000000	---	---	73.000
6	2	82.900	9.000000	1205.000	---	107.000
7	2	51.100	9.000000	991.000	---	451.000
8	2	94.700	9.000000	1862.000	---	331.000
9	2	65.500	9.000000	1034.000	---	871.000
10	2	62.000	9.000000	1226.000	---	12.000
11	3	65.600	9.000000	1015.000	1040.000	157.000
12	2	54.800	9.000000	1350.000	---	641.000
13	2	68.900	9.000000	1496.000	---	791.000

Detailed Results for Radar Type 5_Trial 15

Burst	No. of Pulses	Pulse Width (µs)	Chirp Width (MHz)	Pulse 1-to-2 Spacing (µs)	Pulse 2-to-3 Spacing (µs)	Starting Location Within Interval (µs)
1	2	78.100	10.000000	1102.000	---	160.000
2	2	51.400	10.000000	957.000	---	633.000
3	3	85.200	10.000000	1076.000	1386.000	363.000
4	1	96.300	10.000000	---	---	992.000
5	1	67.200	10.000000	---	---	751.000
6	3	68.900	10.000000	1284.000	1725.000	149.000
7	2	75.900	10.000000	958.000	---	690.000
8	2	87.000	10.000000	1715.000	---	512.000
9	1	88.500	10.000000	---	---	611.000
10	3	61.000	10.000000	1333.000	1179.000	361.000
11	1	57.000	10.000000	---	---	214.000
12	2	55.900	10.000000	1656.000	---	643.000

Detailed Results for Radar Type 5_Trial 16

Burst	No. of Pulses	Pulse Width (µs)	Chirp Width (MHz)	Pulse 1-to-2 Spacing (µs)	Pulse 2-to-3 Spacing (µs)	Starting Location Within Interval
1	2	66.900	16.000000	1927.000	---	308.000
2	3	68.300	16.000000	1068.000	1286.000	574.000
3	2	50.600	16.000000	1234.000	---	468.000
4	2	58.200	16.000000	1470.000	---	785.000
5	3	58.300	16.000000	1083.000	1021.000	1235.000
6	1	71.500	16.000000	---	---	91.000
7	1	67.400	16.000000	---	---	710.000
8	3	59.100	16.000000	1642.000	1231.000	561.000
9	2	66.000	16.000000	1446.000	---	628.000

TEST RESULTS (Cont.):	

Detailed Results for Radar Type 5_Trial 17

Burst	No. of Pulses	Pulse Width (µs)	Chirp Width (MHz)	Pulse 1-to-2 Spacing (µs)	Pulse 2-to-3 Spacing (µs)	Starting Location Within Interval (µs)
1	1	80.900	6.000000	---	---	565.000
2	3	55.800	6.000000	1708.000	1448.000	439.000
3	2	93.400	6.000000	985.000	---	706.000
4	2	83.200	6.000000	1912.000	---	758.000
5	3	59.100	6.000000	1594.000	1591.000	79.000
6	2	74.400	6.000000	939.000	---	107.000
7	3	85.400	6.000000	1733.000	1253.000	238.000
8	3	98.000	6.000000	1896.000	1606.000	373.000
9	1	92.100	6.000000	---	---	363.000
10	1	84.400	6.000000	---	---	227.000
11	2	67.400	6.000000	1272.000	---	646.000
12	3	92.000	6.000000	1831.000	1066.000	457.000
13	3	87.500	6.000000	1763.000	1055.000	22.000

Detailed Results for Radar Type 5_Trial 18

Burst	No. of Pulses	Pulse Width (µs)	Chirp Width (MHz)	Pulse 1-to-2 Spacing (µs)	Pulse 2-to-3 Spacing (µs)	Starting Location Within Interval (µs)
1	2	78.300	8.000000	1113.000	---	442.000
2	3	73.800	8.000000	1354.000	1837.000	373.000
3	3	76.100	8.000000	1355.000	1639.000	48.000
4	3	87.300	8.000000	1498.000	1822.000	357.000
5	1	50.900	8.000000	---	---	161.000
6	2	69.700	8.000000	1619.000	---	132.000
7	3	76.000	8.000000	1288.000	1532.000	644.000
8	2	60.600	8.000000	1300.000	---	48.000
9	1	98.100	8.000000	---	---	403.000
10	2	52.200	8.000000	1422.000	---	506.000
11	2	98.400	8.000000	1351.000	---	22.000
12	2	87.700	8.000000	1180.000	---	634.000
13	3	82.400	8.000000	1704.000	1848.000	28.000
14	3	68.900	8.000000	1080.000	1341.000	12.000
15	2	71.600	8.000000	1681.000	---	577.000
16	3	93.100	8.000000	1758.000	1536.000	609.000
17	2	52.100	8.000000	1941.000	---	612.000
18	2	89.200	8.000000	966.000	---	60.000

TEST RESULTS (Cont.):	

Detailed Results for Radar Type 5_Trial 19

Burst	No. of Pulses	Pulse Width (µs)	Chirp Width (MHz)	Pulse 1-to-2 Spacing (µs)	Pulse 2-to-3 Spacing (µs)	Starting Location Within Interval (µs)
1	3	75.600	14.000000	1717.000	1819.000	814.000
2	2	87.500	14.000000	1850.000	---	108.000
3	1	69.100	14.000000	---	---	310.000
4	2	55.800	14.000000	972.000	---	0.000
5	1	90.600	14.000000	---	---	277.000
6	2	87.800	14.000000	1808.000	---	20.000
7	1	74.000	14.000000	---	---	35.000
8	3	94.800	14.000000	1120.000	938.000	554.000
9	2	57.200	14.000000	1619.000	---	141.000
10	1	56.000	14.000000	---	---	595.000
11	2	99.500	14.000000	1143.000	---	262.000
12	2	66.500	14.000000	1675.000	---	557.000

Detailed Results for Radar Type 5_Trial 20

Burst	No. of Pulses	Pulse Width (µs)	Chirp Width (MHz)	Pulse 1-to-2 Spacing (µs)	Pulse 2-to-3 Spacing (µs)	Starting Location Within Interval (µs)
1	1	80.100	9.000000	---	---	183.000
2	2	59.600	9.000000	946.000	---	473.000
3	2	89.000	9.000000	1573.000	---	426.000
4	2	68.300	9.000000	1801.000	---	366.000
5	1	89.400	9.000000	---	---	250.000
6	2	64.000	9.000000	958.000	---	447.000
7	2	82.200	9.000000	1272.000	---	585.000
8	2	67.300	9.000000	1688.000	---	134.000
9	2	52.500	9.000000	1696.000	---	264.000
10	2	84.100	9.000000	1133.000	---	335.000
11	2	53.000	9.000000	1374.000	---	890.000
12	2	62.000	9.000000	1636.000	---	526.000
13	3	96.100	9.000000	1660.000	1103.000	493.000

TEST RESULTS (Cont.):	

Detailed Results for Radar Type 5_Trial 21

Burst	No. of Pulses	Pulse Width (µs)	Chirp Width (MHz)	Pulse 1-to-2 Spacing (µs)	Pulse 2-to-3 Spacing (µs)	Starting Location Within Interval (µs)
1	3	64.900	8.000000	1505.000	942.000	403.000
2	2	74.300	8.000000	1789.000	---	177.000
3	3	70.800	8.000000	1084.000	1077.000	477.000
4	2	89.800	8.000000	1727.000	---	39.000
5	2	93.800	8.000000	1220.000	---	581.000
6	3	71.300	8.000000	1699.000	1079.000	519.000
7	2	73.200	8.000000	1306.000	---	9.000
8	2	78.200	8.000000	1010.000	---	72.000
9	3	65.600	8.000000	1443.000	1201.000	152.000
10	2	80.300	8.000000	1521.000	---	187.000
11	1	53.000	8.000000	---	---	669.000
12	2	97.600	8.000000	1808.000	---	558.000
13	2	69.000	8.000000	1583.000	---	502.000
14	3	98.300	8.000000	1282.000	1548.000	356.000
15	3	58.000	8.000000	1058.000	1448.000	179.000
16	2	53.300	8.000000	993.000	---	253.000
17	2	78.600	8.000000	1265.000	---	413.000

Detailed Results for Radar Type 5_Trial 22

Burst	No. of Pulses	Pulse Width (µs)	Chirp Width (MHz)	Pulse 1-to-2 Spacing (µs)	Pulse 2-to-3 Spacing (µs)	Starting Location Within Interval (µs)
1	1	93.100	11.000000	---	---	422.000
2	3	61.300	11.000000	1194.000	1086.000	738.000
3	3	57.000	11.000000	1918.000	1102.000	523.000
4	3	91.800	11.000000	1588.000	1798.000	874.000
5	3	88.600	11.000000	1491.000	1061.000	748.000
6	3	62.400	11.000000	1019.000	1144.000	525.000
7	3	88.000	11.000000	1259.000	1713.000	641.000
8	2	77.700	11.000000	1025.000	---	383.000
9	1	51.800	11.000000	---	---	554.000
10	1	55.900	11.000000	---	---	939.000
11	3	63.700	11.000000	1503.000	1789.000	182.000

TEST RESULTS (Cont.):	

Detailed Results for Radar Type 5_Trial 23

Burst	No. of Pulses	Pulse Width (µs)	Chirp Width (MHz)	Pulse 1-to-2 Spacing (µs)	Pulse 2-to-3 Spacing (µs)	Starting Location Within Interval (µs)
1	2	58.200	10.000000	1320.000	---	122.000
2	2	66.300	10.000000	1849.000	---	244.000
3	3	62.100	10.000000	1589.000	1390.000	229.000
4	2	74.300	10.000000	1184.000	---	976.000
5	1	58.600	10.000000	---	---	730.000
6	3	82.600	10.000000	1633.000	1513.000	669.000
7	1	73.100	10.000000	---	---	735.000
8	1	90.900	10.000000	---	---	645.000
9	3	66.300	10.000000	1563.000	1348.000	380.000
10	2	54.800	10.000000	1384.000	---	556.000
11	3	65.600	10.000000	1218.000	937.000	801.000
12	3	74.500	10.000000	958.000	1010.000	493.000

Detailed Results for Radar Type 5_Trial 24

Burst	No. of Pulses	Pulse Width (µs)	Chirp Width (MHz)	Pulse 1-to-2 Spacing (µs)	Pulse 2-to-3 Spacing (µs)	Starting Location Within Interval (µs)
1	2	79.600	17.000000	1029.000	---	270.000
2	1	90.200	17.000000	---	---	580.000
3	3	66.100	17.000000	1312.000	1766.000	86.000
4	1	95.200	17.000000	---	---	92.000
5	2	76.300	17.000000	1238.000	---	368.000
6	2	75.800	17.000000	1106.000	---	165.000
7	3	50.700	17.000000	1312.000	1580.000	377.000
8	3	56.300	17.000000	1837.000	1154.000	323.000
9	3	56.100	17.000000	1061.000	1394.000	400.000
10	3	81.200	17.000000	1582.000	1379.000	405.000
11	2	89.700	17.000000	1845.000	---	506.000
12	1	97.800	17.000000	---	---	331.000
13	1	75.700	17.000000	---	---	430.000
14	3	50.200	17.000000	1237.000	1653.000	544.000
15	2	52.000	17.000000	1729.000	---	339.000
16	2	69.400	17.000000	1603.000	---	44.000
17	2	67.500	17.000000	1168.000	---	521.000
18	2	98.100	17.000000	958.000	---	384.000
19	3	63.600	17.000000	1260.000	1640.000	194.000

TEST RESULTS (Cont.):	

Detailed Results for Radar Type 5_Trial 25

Burst	No. of Pulses	Pulse Width (µs)	Chirp Width (MHz)	Pulse 1-to-2 Spacing (µs)	Pulse 2-to-3 Spacing (µs)	Starting Location Within Interval (µs)
1	1	70.600	15.000000	---	---	302.000
2	1	74.700	15.000000	---	---	299.000
3	1	63.600	15.000000	---	---	82.000
4	2	52.100	15.000000	1812.000	---	536.000
5	1	97.500	15.000000	---	---	395.000
6	2	96.300	15.000000	1335.000	---	250.000
7	3	70.800	15.000000	1052.000	1243.000	462.000
8	3	59.600	15.000000	1059.000	1550.000	477.000
9	3	99.200	15.000000	1633.000	1572.000	254.000
10	1	53.300	15.000000	---	---	33.000
11	3	98.600	15.000000	1526.000	1428.000	564.000
12	3	89.300	15.000000	1017.000	1662.000	221.000
13	1	62.700	15.000000	---	---	248.000
14	2	70.400	15.000000	1855.000	---	232.000
15	3	61.400	15.000000	1444.000	1073.000	470.000
16	1	76.000	15.000000	---	---	441.000
17	2	90.800	15.000000	1164.000	---	195.000
18	3	65.200	15.000000	1246.000	1582.000	246.000
19	3	74.700	15.000000	928.000	1671.000	194.000
20	2	75.100	15.000000	989.000	---	83.000

Detailed Results for Radar Type 5_Trial 26

Burst	No. of Pulses	Pulse Width (µs)	Chirp Width (MHz)	Pulse 1-to-2 Spacing (µs)	Pulse 2-to-3 Spacing (µs)	Starting Location Within Interval (µs)
1	1	85.200	14.000000	---	---	99.000
2	3	59.000	14.000000	1887.000	1086.000	687.000
3	1	51.000	14.000000	---	---	381.000
4	2	84.800	14.000000	1906.000	---	520.000
5	3	83.200	14.000000	1466.000	1170.000	910.000
6	3	92.300	14.000000	977.000	1255.000	1.000
7	2	59.400	14.000000	1674.000	---	732.000
8	2	90.700	14.000000	1058.000	---	642.000
9	3	93.100	14.000000	961.000	934.000	359.000
10	3	74.900	14.000000	1673.000	1639.000	602.000
11	2	90.800	14.000000	1227.000	---	430.000
12	3	58.500	14.000000	1625.000	1374.000	10.000
13	1	57.700	14.000000	---	---	804.000

TEST RESULTS (Cont.):	

Detailed Results for Radar Type 5_Trial 27

Burst	No. of Pulses	Pulse Width (µs)	Chirp Width (MHz)	Pulse 1-to-2 Spacing (µs)	Pulse 2-to-3 Spacing (µs)	Starting Location Within Interval (µs)
1	2	54.600	13.000000	1482.000	---	997.000
2	3	58.000	13.000000	1111.000	999.000	712.000
3	3	63.400	13.000000	1268.000	1709.000	269.000
4	3	67.400	13.000000	1035.000	1498.000	377.000
5	3	70.200	13.000000	1122.000	999.000	381.000
6	1	92.500	13.000000	---	---	942.000
7	3	63.900	13.000000	1233.000	1239.000	49.000
8	1	67.700	13.000000	---	---	121.000
9	2	74.700	13.000000	1791.000	---	596.000
10	2	98.000	13.000000	1740.000	---	602.000

Detailed Results for Radar Type 5_Trial 28

Burst	No. of Pulses	Pulse Width (µs)	Chirp Width (MHz)	Pulse 1-to-2 Spacing (µs)	Pulse 2-to-3 Spacing (µs)	Starting Location Within Interval (µs)
1	3	52.300	11.000000	1799.000	1297.000	737.000
2	3	53.600	11.000000	1397.000	1860.000	189.000
3	1	59.200	11.000000	---	---	495.000
4	3	54.300	11.000000	1885.000	1319.000	152.000
5	1	75.600	11.000000	---	---	76.000
6	1	52.900	11.000000	---	---	190.000
7	1	97.700	11.000000	---	---	195.000
8	2	50.200	11.000000	1276.000	---	604.000
9	3	95.000	11.000000	1526.000	1582.000	267.000
10	3	77.500	11.000000	1494.000	1729.000	842.000
11	1	66.900	11.000000	---	---	144.000
12	2	96.100	11.000000	1441.000	---	435.000
13	3	62.500	11.000000	1037.000	1474.000	262.000
14	2	53.100	11.000000	1278.000	---	525.000

TEST RESULTS (Cont.):	

Detailed Results for Radar Type 5_Trial 29

Burst	No. of Pulses	Pulse Width (µs)	Chirp Width (MHz)	Pulse 1-to-2 Spacing (µs)	Pulse 2-to-3 Spacing (µs)	Starting Location Within Interval (µs)
1	2	69.000	7.000000	1220.000	---	20.000
2	3	88.500	7.000000	1376.000	1096.000	45.000
3	2	56.300	7.000000	1207.000	---	779.000
4	2	88.800	7.000000	1793.000	---	532.000
5	1	78.600	7.000000	---	---	577.000
6	2	82.300	7.000000	1534.000	---	549.000
7	1	71.700	7.000000	---	---	612.000
8	2	52.800	7.000000	1891.000	---	631.000
9	1	66.100	7.000000	---	---	166.000
10	2	72.800	7.000000	1460.000	---	381.000
11	2	82.900	7.000000	1293.000	---	451.000
12	3	72.300	7.000000	1224.000	1577.000	61.000
13	2	91.900	7.000000	1281.000	---	619.000
14	3	82.400	7.000000	1570.000	1469.000	99.000

Detailed Results for Radar Type 5_Trial 30

Burst	No. of Pulses	Pulse Width (µs)	Chirp Width (MHz)	Pulse 1-to-2 Spacing (µs)	Pulse 2-to-3 Spacing (µs)	Starting Location Within Interval (µs)
1	2	55.900	14.000000	1883.000	---	1025.000
2	2	64.100	14.000000	1710.000	---	849.000
3	2	77.200	14.000000	1650.000	---	136.000
4	2	96.600	14.000000	1520.000	---	468.000
5	2	98.000	14.000000	923.000	---	376.000
6	2	66.700	14.000000	1462.000	---	705.000
7	3	66.400	14.000000	1003.000	1192.000	1416.000
8	2	57.000	14.000000	1038.000	---	240.000

TEST RESULTS (Cont.):	

Detailed Results for Radar Type 6

Trial Number	Pulse Width (µs)	PRI (µs)	No. of Pulses	Pulses Detected	Comment
1	1.000	300.000	9	YES	
2	1.000	300.000	9	YES	
3	1.000	300.000	9	YES	
4	1.000	300.000	9	YES	
5	1.000	300.000	9	YES	
6	1.000	300.000	9	YES	
7	1.000	300.000	9	YES	
8	1.000	300.000	9	YES	
9	1.000	300.000	9	YES	
10	1.000	300.000	9	YES	
11	1.000	300.000	9	YES	
12	1.000	300.000	9	YES	
13	1.000	300.000	9	YES	
14	1.000	300.000	9	YES	
15	1.000	300.000	9	YES	
16	1.000	300.000	9	YES	
17	1.000	300.000	9	YES	
18	1.000	300.000	9	YES	
19	1.000	300.000	9	YES	
20	1.000	300.000	9	YES	
21	1.000	300.000	9	YES	
22	1.000	300.000	9	YES	
23	1.000	300.000	9	YES	
24	1.000	300.000	9	YES	
25	1.000	300.000	9	YES	
26	1.000	300.000	9	YES	
27	1.000	300.000	9	YES	
28	1.000	300.000	9	YES	
29	1.000	300.000	9	YES	
30	1.000	300.000	9	YES	

TEST RESULTS (Cont.):	

Settings for Radar Type 1 to 4

Setting	Instrument Value
Center	5.29000 GHz
Span	Zero Span
RBW	3.000 MHz
VBW	3.000 MHz
Sweep Points	30001
Sweep time	12.000 s
Reference	-20.000 dBm
Attenuation	0.000 dB
Detector	MaxPeak
Sweep Count	1
Filter	3 dB
Trace Mode	Clear Write
Sweep type	Sweep
Preamp	off
Trigger	External
Trigger Offset	1.000 s

Settings for Long Pulse Radar Type 5

Setting	Instrument Value
Center	5.29000 GHz
Span	Zero Span
RBW	3.000 MHz
VBW	3.000 MHz
Sweep Points	30001
Sweep time	36.000 s
Reference Level	-20.000 dBm
Attenuation	0.000 dB
Detector	Max Peak
Sweep Count	1
Filter	3 dB
Trace Mode	Clear Write
Sweep type	Sweep
Preamp	off
Trigger	External
Trigger Offset	1.000 s

TEST RESULTS (Cont.):	

Settings for Radar Type 6

Setting	Instrument Value
Center	5.29000 GHz
Span	Zero Span
RBW	3.000 MHz
VBW	3.000 MHz
Sweep Points	30001
Sweep time	12.000 s
Reference	-20.000 dBm
Attenuation	0.000 dB
Detector	MaxPeak
Sweep Count	1
Filter	3 dB
Trace Mode	Clear Write
Sweep type	Sweep
Preamp	off
Trigger	External
Trigger Offset	1.000 s

Radar level verification

Description	Value	Unit
Configured DUT EIRP:	100	mW
Configured DUT PSD:	-2.18	dBm/MHz
Requirement of the Detection threshold value for this given values acc. to FCC clause 5.2 / Table 3	-62	dBm
Vector Generator level setting	-4.01	dBm
Configured overall path loss from Vector Generator RF out to DUT connector of 'DUT to OSP'-cable	56.99	dB
Given additional level added to the amplitude of the waveform to account for variations in measurement equipment acc. to FCC clause 5.2 / Table 3 / Note 2	1.00	dB
This results in the following radar signal level at the DUT	-61.00	dBm