A-Class

Owner's Manual

Mercedes-Benz

Symbols

In this Owner's Manual, you will find the following symbols:

DANGER Danger due to not observing the warning notices

Warning notices draw your attention to hazards that may endanger your health or life, or the health or life of others.

▶ Please observe the warning notices in this Owner's Manual.

ENVIRONMENTAL NOTE Environmental damage due to failure to observe environmental notes

Environmental notes include information on environmentally responsible behaviour or environmentally responsible disposal.

▶ Observe environmental notes.

NOTE Damage to property due to failure to observe notes on material damage

Notes on material damage inform you of risks which may lead to your vehicle being damaged.

▶ Observe notes on material damage.

ⓘ Useful instructions or further information that could be helpful to you.

▶	Instruction
(→ page)	Further information on a topic
Display	Information in the multifunction display/multimedia display
⟶	Highest menu level, which is to be selected in the multimedia system
▶▶	Corresponding submenus, which are to be selected in the multimedia system
*	Marks a cause

Welcome to the world of Mercedes-Benz

Before you first drive off, read this Owner's Manual carefully and familiarise yourself with your vehicle. For your own safety and a longer vehicle life, follow the instructions and warning notices in this manual. Disregarding them may lead to damage to the vehicle or personal injury.

The equipment or model designation of your vehicle may vary according to:

- model
- order
- national version
- availability

The illustrations in this manual show a left-hand drive vehicle. On right-hand drive vehicles, the layout of components and controls differs accordingly.

Mercedes-Benz is constantly updating its vehicles to the state of the art.

Mercedes-Benz therefore reserves the right to introduce changes in the following areas:

- design
- equipment
- technical features

The equipment in your vehicle may therefore differ from that shown in the descriptions and illustrations.

The following are integral parts of the vehicle:

- Digital Owner's Manual
- Printed Owner's Manual
- Service Booklet
- Equipment-dependent Supplements

Keep these documents in the vehicle at all times. If you sell the vehicle, always pass all of the documents on to the new owner.

1775844400Z102

At a glance **6**
Overview of the cockpit 6
Overview of warning and indicator lamps 8
Overview of the overhead control panel 12
Overview of the door control panel and seat adjustment 14
Overview of emergencies and breakdowns ... 16

Digital Owner's Manual **18**
Calling up the Digital Owner's Manual 18

General notes **20**
Protection of the environment 20
Take-back of end-of-life vehicles 20
Mercedes-Benz GenuineParts 21
Owner's Manual 22
Operating safety 22
Declaration of Conformity 23
Diagnostics connection 25
Qualified specialist workshop 25
Vehicle registration 26
Correct use of the vehicle 26
Implied warranty 26
QR code for rescue card 26
Vehicle data storage 27
Copyright 29

Occupant safety **30**
Restraint system 30
Seat belts 32
Airbags 37
PRE-SAFE® system 44
Children in the vehicle 45
Notes on pets in the vehicle 62

Opening and closing **64**
Key 64
Doors 68
Load compartment 73
Side windows 75
Sliding sunroof 78
Anti-theft protection 83

Seats and stowing **86**
Notes on the correct driver's seat position ... 86
Seats 87
Steering wheel 94
Using the memory function 97
Stowage areas 98
Cup holders 108
Ashtray and cigarette lighter 110
Sockets 111
Wireless charging of the mobile phone and connection with the exterior aerial 113
Fitting/removing the floor mats 115

Light and sight **116**
Exterior lighting 116
Interior lighting 124
Changing bulbs (only for vehicles with halogen headlamps) 125
Windscreen wipers and windscreen washer system 127
Mirrors 131
Operating the sun visors 134

Climate control **135**
Overview of climate control systems 135
Operating the climate control system 136

Driving and parking **140**
Driving 140
DYNAMIC SELECT switch 149
Automatic transmission 150
Refuelling 154
Parking 160
Driving and driving safety systems 168
Trailer hitch 221
Bicycle rack function 224
Vehicle towing instructions 226

Instrument Display and on-board computer **227**
Instrument display overview 227
Overview of the buttons on the steering wheel 228
Operating the on-board computer 229
Setting the multifunction display 230
Overview of displays on the multifunction display 231
Adjusting the instrument lighting 232
Menus and submenus 232
Head-up Display 239

LINGUATRONIC **240**
Notes on operating safety 240
Operation 240
Using LINGUATRONIC effectively 243
Essential voice commands 243

MBUX (Mercedes-Benz User Experience) .. **256**
Overview and operation 256
System settings 281
Navigation 291
Telephone 327
Online and Internet functions 352
Media 361
Radio 368
Sound 371

Maintenance and care **374**
ASSYST PLUS service interval display 374
Engine compartment 375
Cleaning and care 381

Breakdown assistance **388**
Emergency 388
Flat tyre 390
Battery (vehicle) 395
Tow-starting or towing away 400
Electrical fuses 404

Wheels and tyres **408**
Notes on noise or unusual handling characteristics 408
Regular checking of wheels and tyres 408
Notes on snow chains 409
Tyre pressure 409
Wheel change 418
Emergency spare wheel 427

Technical data **429**
Notes on technical data 429
On-board electronics 429
Vehicle identification plate, VIN and engine number 431
Operating fluids 433
Vehicle data 440
Trailer hitch 441

Display messages and warning/indicator lamps 443
Display messages 443
Warning and indicator lamps 496

Index 513

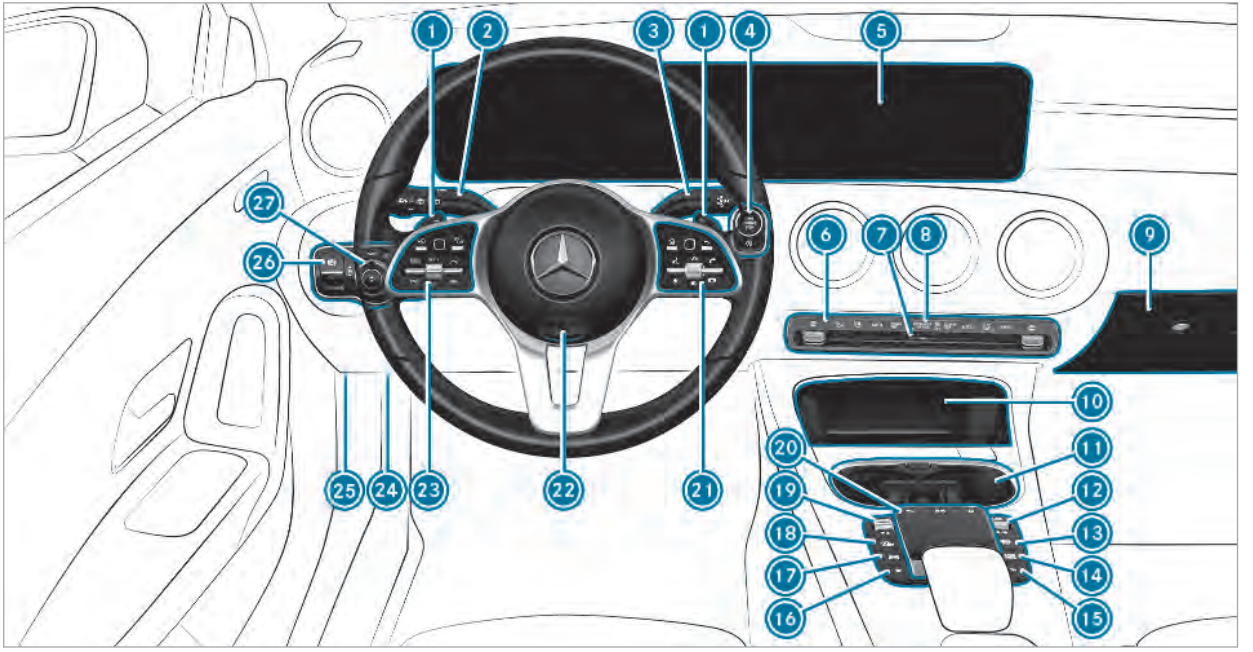

Left-hand drive vehicles

1 Steering wheel gearshift paddles	→	152
2 Combination switch	→	118
3 DIRECT SELECT lever	→	150
4 Start/stop button	→	141
5 Multimedia system display	→	259
6 Climate control systems	→	136
7 Hazard warning lights	→	119
8 PASSENGER AIRBAG indicator lamps	→	41
9 Glove box	→	100
10 Stowage compartment	→	99
11 Cup holder	→	108
12 Control knob		
Switches the sound and volume on and off	→	256
Switches the multimedia system on and off	→	256
13 Calls up navigation	→	291
14 Calls up the radio	→	369
Calls up media	→	364
15 Calls up the telephone	→	328
16 Calls up favourites	→	271
17 Calls up vehicle functions	→	263
18 Active Parking Assist	→	207
19 DYNAMIC SELECT switch	→	149
20 Control elements for the multimedia system	→	259
21 Control panel for the multimedia system	→	228
22 Adjusts the steering wheel	→	94
23 Control panel for:		
On-board computer	→	228
Operating cruise control or the variable limiter	→	181
Operating Active Distance Assist DISTRONIC	→	184
24 Diagnostics connection	→	25
25 Unlocks the bonnet	→	376
26 Electric parking brake	→	165
27 Light switch	→	116

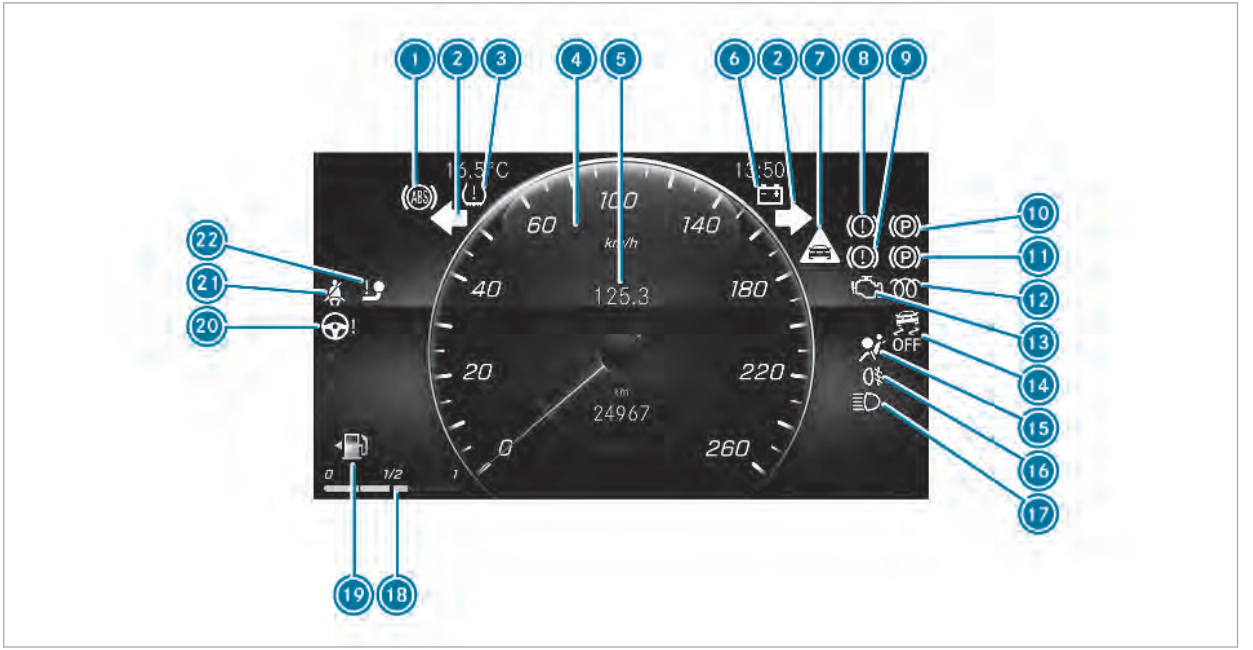

Standard cockpit

1	ABS malfunctioning	→	498
2	Turn signal light	→	118
3	Tyre pressure monitoring system	→	511
4	Speedometer	→	227
5	Multifunction display	→	231
6	Electrical fault	→	508
7	Distance warning	→	505
8	Brakes (red)	→	498
9	Brakes (yellow)	→	498
10	Electric parking brake applied (red)	→	498
11	Electric parking brake (yellow)	→	498
12	Diesel engine: preglow		
13	Engine diagnostics	→	508
14	ESP® OFF	→	498
	ESP®	→	498
15	Restraint system	→	31
16	Rear fog light	→	117
17	Main beam	→	118
	Dipped beam	→	116
	Standing lights	→	116
18	Fuel level display		
19	Fuel reserve with fuel filler cap location indicator	→	508
20	Power-assisted steering malfunctioning	→	506
21	Seat belt not fastened	→	504
22	Trailer hitch not operational	→	506

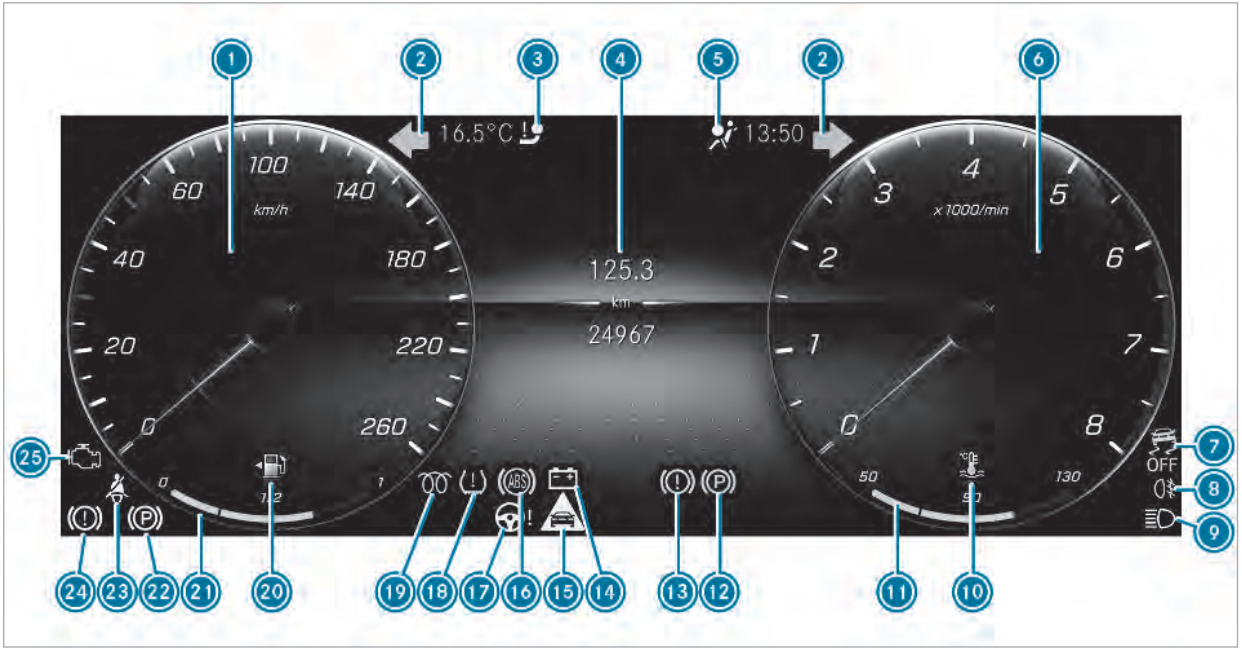

Widescreen cockpit

1	Speedometer	→	227
2	Turn signal light	→	118
3	Trailer hitch not operational	→	506
4	Multifunction display	→	231
5	Restraint system	→	31
6	Rev counter	→	227
7	ESP® OFF	→	498
	ESP®	→	498
8	Rear fog light	→	117
9	Main beam	→	118
	Dipped beam	→	116
	Standing lights	→	116
10	Coolant too hot/cold	→	508
11	Coolant temperature display	→	227
12	Electric parking brake (yellow)	→	498
13	Brakes (yellow)	→	498
14	Electrical fault	→	508
15	Distance warning	→	505
16	ABS malfunctioning	→	498
17	Power-assisted steering malfunctioning	→	506
18	Tyre pressure monitoring system	→	511
19	Diesel engine: preglow		
20	Fuel reserve with fuel filler cap location indicator	→	508
21	Fuel level display		
22	Electric parking brake applied (red)	→	498
23	Seat belt not fastened	→	504
24	Brakes (red)	→	498
25	Engine diagnostics	→	508

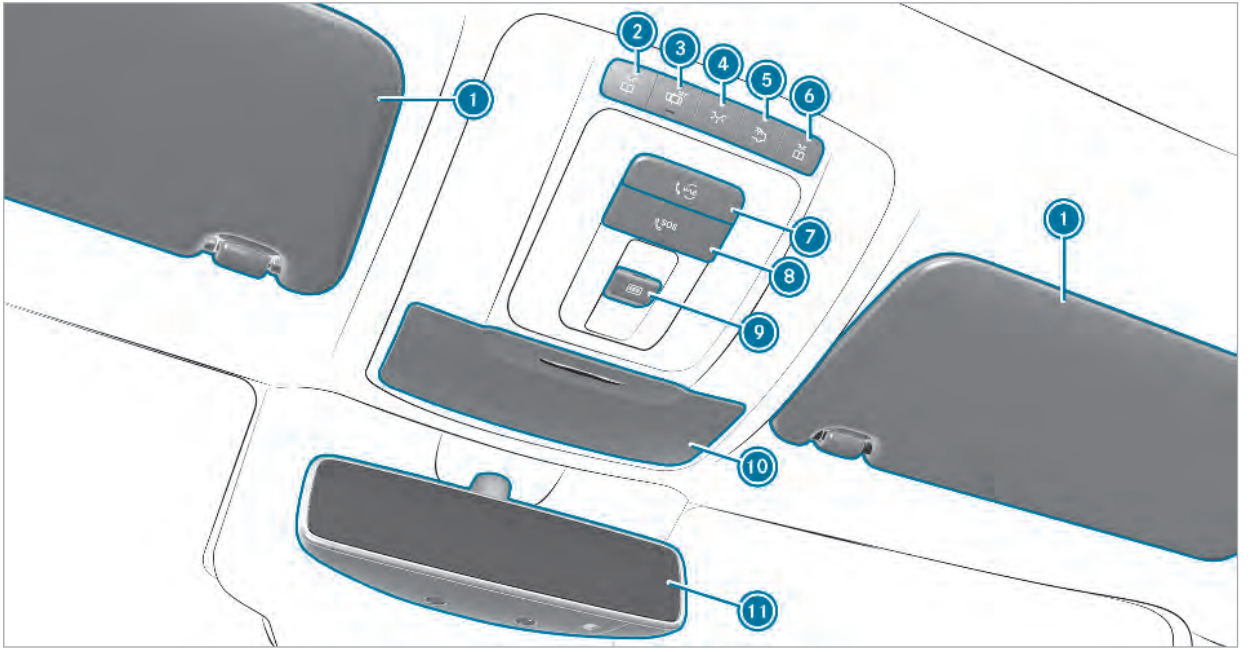
1
2
3
4
5
6
7
8
9
10
11
1

1	Sun visors	→	134
2	Switches the left-hand reading lamp on/off	→	124
3	Switches the automatic lighting control on/off	→	124
4	Switches the front interior lighting on/off	→	124
5	Switches the rear interior lighting on/off	→	124
6	Switches the right-hand reading lamp on/off	→	124
7	Service call button (Mercedes me connect)	→	346
8	SOS emergency call system (Mercedes-Benz emergency call system)	→	346
9	Opens/closes the panoramic sliding sunroof	→	78
	Opens/closes the roller sunblinds	→	78
10	Spectacles compartment	→	100
11	Inside rearview mirror	→	132

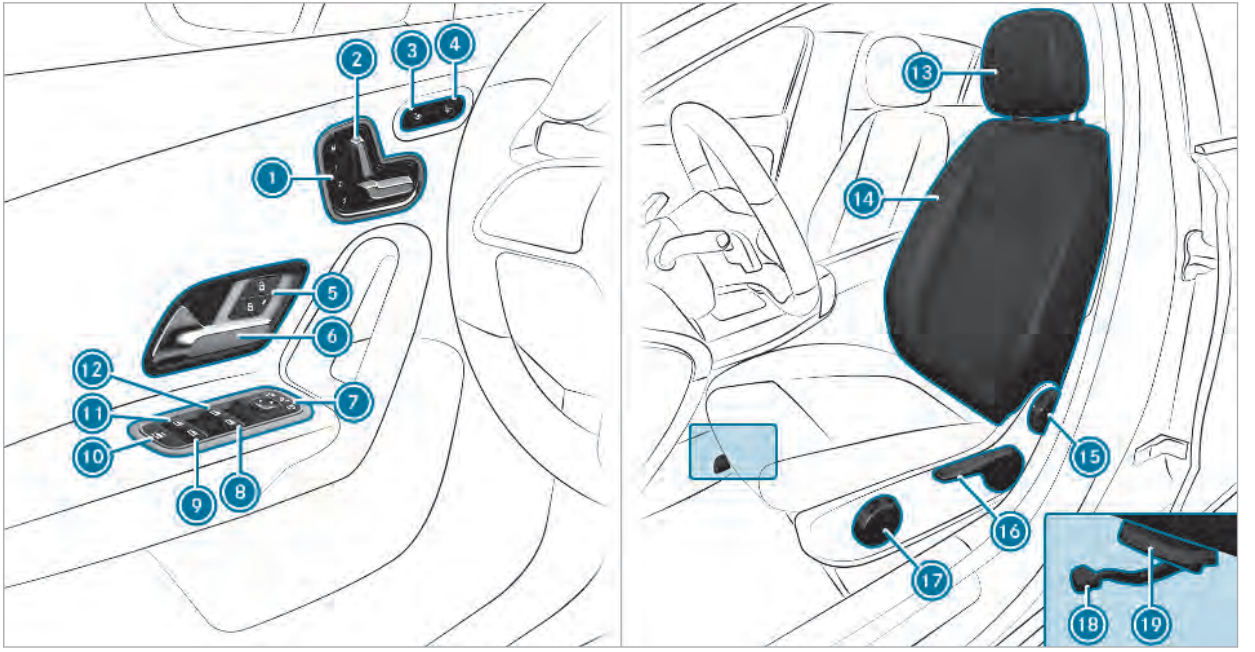
1
2
3
4
5
6
7
8
9
10
11
12
13
14
15
16
17
18
19

1 Using the memory function	→	97
2 Adjusts the seats electrically	→	90
3 Switches the seat heater on/off	→	93
4 Switches the seat ventilation on/off	→	94
5 Locks/unlocks the vehicle	→	69
6 Opens the door	→	69
7 Operates the outside mirrors	→	131
8 Opens/closes the right side window	→	75
9 Opens/closes the rear right side window	→	75
10 Override feature for the rear side windows	→	62
11 Opens/closes the rear left side window	→	75
12 Opens/closes the left side window	→	75
13 Adjusts the head restraints	→	90
14 Seat adjustment using the multimedia system	→	92
15 Adjusts the seat backrest inclination	→	89
16 Adjusts the seat height	→	89
17 Adjusts the seat cushion inclination	→	89
18 Sets the seat fore-and-aft adjustment	→	89
19 Adjusts the seat cushion length	→	89

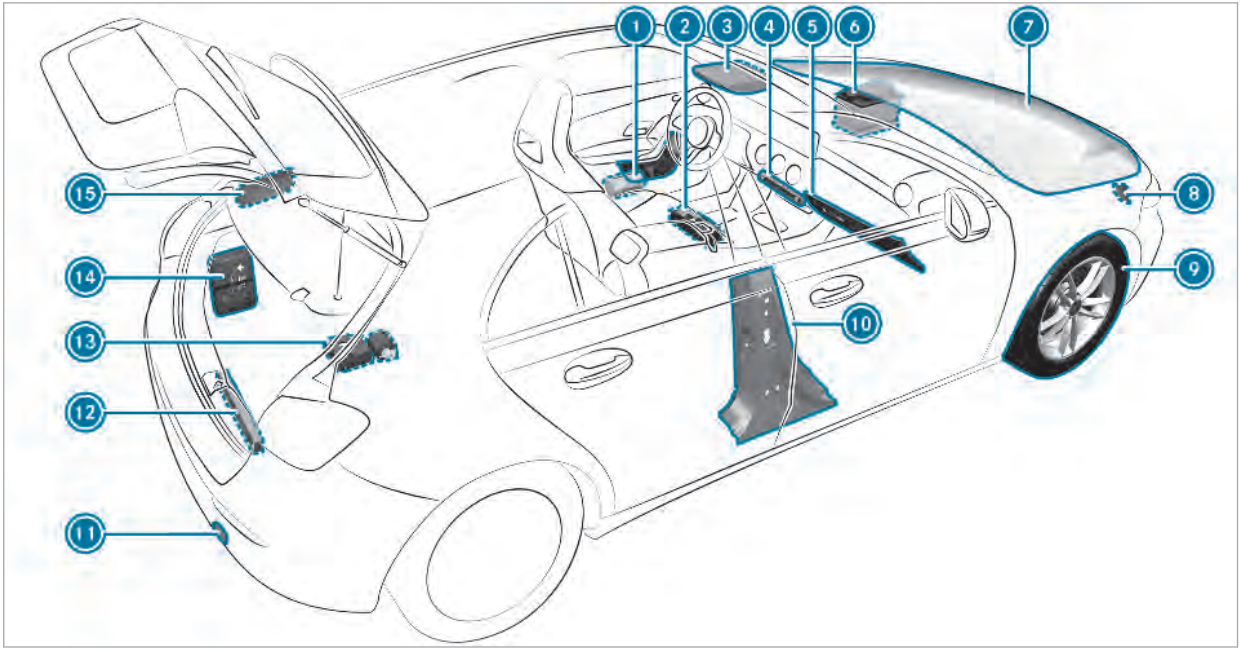
1
2
3
4
5
6
7
8
9
10
11
12
13
14
15

What to do in the event of an accident

1	Safety vests	→	388
2	Fire extinguisher	→	389
3	Buttons for the SOS emergency call system and breakdown assistance	→	346
4	Hazard warning lights	→	119
5	Glove box	→	100
6	Starting assistance	→	397
7	Checking and topping up operating fluids	→	433
8	Tow-starting and towing away	→	401
9	Flat tyre	→	390
10	QR codes for accessing the rescue card	→	26
11	Tow-starting and towing away	→	401
12	Warning triangle	→	388
13	TIREFIT kit	→	391
14	First-aid kit (soft sided)	→	389
15	Fuel filler flap with instruction labels for tyre pressure, fuel type and QR codes for accessing the rescue card	→	154

Calling up the Digital Owner's Manual

Multimedia system:

→ Vehicle info ▸▸ Owner's Manual

Alternatively, you have the following possibilities:

- **LINGUATRONIC:** call up the Digital Owner's Manual via the voice control system
- **Multifunction display:** call up brief information from the Digital Owner's Manual as messages in the multifunction display (also during the journey)
- **Context introduction:** open the corresponding context in the Digital Owner's Manual by pressing the menu path input of the multimedia system

ⓘ A function from the multimedia system can also be called up from the Digital Owner's Manual using the context introduction .

The Digital Owner's Manual describes the function and operation of:

- the vehicle
- the multimedia system

For safety reasons, the Digital Owner's Manual is deactivated while driving.

▶ Select one of the following menu items in the Digital Owner's Manual:

- Search: search for keywords, in order to find quick answers to questions about the operation of the vehicle.
- Quick start: find information that prepares you for certain everyday situations with your vehicle.
- Tips: find the first steps towards setting up your vehicle.
- Animations: watch animations of selected vehicle functions.
- Messages: receive additional information about the messages in the multifunction display.
- Bookmarks: receive access to your personally saved bookmarks.
- Language: select the language for the Digital Owner's Manual.

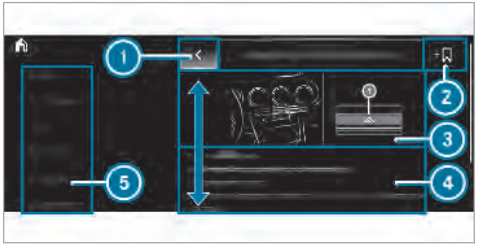

1. Back
2. Add bookmarks
3. Picture

4 Contents section
5 Menu

Some sections in the Digital Owner's Manual, e.g. warning notes, can be opened and closed.

ⓘ The Owner's Manual can also be found in the Mercedes-Benz Guides App in all common App Stores.

Protection of the environment

ENVIRONMENTAL NOTE Environmental damage due to operating conditions and personal driving style

The pollutant emission of your vehicle is directly related to the way you operate your vehicle.

You can help to protect the environment by operating your vehicle in an environmentally-responsible manner. Please observe the following recommendations on operating conditions and personal driving style.

Operating conditions:

- make sure that the tyre pressure is correct.
- do not carry any unnecessary weight (e.g. roof luggage racks once you no longer need them).
- adhere to the service intervals. a regularly serviced vehicle will contribute to environmental protection.
- always have maintenance work carried out at a qualified specialist workshop.

Personal driving style:

- do not depress the accelerator pedal when starting the engine.
- do not warm up the engine while the vehicle is stationary.
- drive carefully and maintain a suitable distance from the vehicle in front.
- avoid frequent, sudden acceleration and braking.
- change gear in good time and use each gear only up to ⅔ of its maximum engine speed.
- switch off the engine in stationary traffic, e.g. by using the ECO start/stop function.
- drive fuel-efficiently.

Take-back of end-of-life vehicles

EU countries only:
Mercedes-Benz will take back your end-of-life vehicle for environment-friendly disposal in accordance with the European Union (EU) End-of-Life Vehicles Directive.

A network of vehicle take-back points and dismantlers has been established for you to return your vehicle. You can leave it at any of these points free of charge. This makes an important contribution to closing the recycling circle and conserving resources.

For further information about the recycling and disposal of end-of-life vehicles, and the take-back conditions, please visit the national Mercedes-Benz website for your country.

Mercedes-Benz GenuineParts

ENVIRONMENTAL NOTE Environmental damage caused by not using recycled reconditioned components

Daimler AG offers recycled reconditioned components and parts with the same quality as new parts. The same entitlement from the implied warranty is valid as for new parts.

▶ Use recycled reconditioned components and parts from Daimler AG.

NOTE Impairment of the operating efficiency of the restraint systems from installing accessories or from repairs or welding

Airbags and seat belt tensioners, as well as control units and sensors for the restraint systems, may be installed in the following areas of your vehicle:

- Doors
- Door pillars
- Door sills
- Seats
- Cockpit
- Instrument cluster
- Centre console

▶ Do not install accessories such as audio systems in these areas.

▶ Do not carry out repairs or welding.

▶ Have accessories retrofitted at a qualified specialist workshop.

You could jeopardise the operating safety of your vehicle if you use parts, tyres and wheels as well as accessories relevant to safety which have not been approved by Mercedes-Benz. Safety-relevant systems, e.g. the brake system, may malfunction. Only use Mercedes-Benz GenuineParts or parts of equal quality. Only use tyres, wheels and accessory parts that have been specifically approved for your vehicle model.

Mercedes-Benz tests genuine parts and conversion parts and accessory parts that have been specifically approved for your vehicle model for their reliability, safety and suitability. Despite ongoing market research, Mercedes-Benz is unable to assess other parts. Mercedes-Benz therefore accepts no responsibility for the use of such parts in Mercedes-Benz vehicles, even if they have been officially approved or independently approved by a testing centre.

Certain parts are only officially approved for installation or modification if they comply with legal requirements. All Mercedes-Benz GenuineParts meet the approval requirements. The use of non-approved parts may invalidate the vehicle's general operating permit.

This is the case in the following situations:

- A change of the vehicle type from that for which the vehicle's general operating permit was granted.
- If other road users could be endangered.
- If the exhaust gas or noise levels are adversely affected.

Always specify the vehicle identification number (VIN) (→ page 431) when ordering Mercedes-Benz GenuineParts.

Owner's Manual

This Owner's Manual describes all models and all standard and optional equipment available for your vehicle at the time of this Owner's Manual going to press. Country-specific differences are possible. Note that your vehicle may not be fitted with all features described. This is also the case for systems and functions relevant to safety. Therefore, the equipment on your vehicle may differ from that in the descriptions and illustrations.

The original purchase contract documentation for your vehicle contains a list of all of the systems in your vehicle.

Should you have any questions concerning equipment and operation, please consult a Mercedes-Benz service centre.

The Owner's Manual and Service Booklet are important documents and should be kept in the vehicle.

Operating safety

⚠ **WARNING** Risk of accident due to malfunctions or system failures

If you do not have the prescribed service/maintenance work or any required repairs carried out, this could result in malfunctions or system failures.

▶ Always have the prescribed service/maintenance work as well any required repairs carried out at a qualified specialist workshop.

⚠ **WARNING** Risk of accident or injury due to incorrect modifications on electronic component parts

Modification to electronic components, their software or wiring could impair their function and/or the function of other networked component parts. In particular, systems relevant to safety could also be affected.

As a result, these may no longer function properly and/or jeopardise the operating safety of the vehicle.

▶ Never tamper with the wiring and electronic component parts or their software.

▶ You should have all work on electrical and electronic components carried out at a qualified specialist workshop.

If you modify the car electronics, the general operating permit is rendered invalid.

⚠ **WARNING** Risk of fire due to flammable materials on hot parts of the exhaust system

Flammable material such as leaves, grass or twigs may ignite if they come into contact with hot parts of the exhaust system.

▶ When driving on unpaved roads or off-road, regularly check the vehicle underside.

- Remove trapped plants or other flammable material, in particular.
- If there is damage, consult a qualified specialist workshop immediately.

! NOTE Damage to the vehicle

Damage to the vehicle may occur in the following cases:

- the vehicle becomes grounded, e.g. on a high kerb or an unpaved road.
- the vehicle is driven too fast over an obstacle, e.g. a kerb, speed bump or pothole.
- a heavy object strikes the underbody or chassis components.

In situations such as this, the body, the underbody, chassis components, wheels or tyres could be damaged without the damage being visible. Components damaged in this way can unexpectedly fail or, in the case of an accident, no longer withstand the strain they are designed to.

If the underbody panelling is damaged, flammable materials such as leaves, grass or twigs can gather between the underbody and the underbody panelling. These materials may ignite if they come into contact with hot parts on the exhaust system.

- Have the vehicle checked and repaired immediately at a qualified specialist workshop.

or

- If driving safety is impaired while continuing your journey, pull over and stop the vehicle immediately, paying attention to road and traffic conditions, and contact a qualified specialist workshop.

Declaration of Conformity

Electromagnetic compatibility

The electromagnetic compatibility of the vehicle components has been checked and certified according to the currently valid version of Regulation ECE-R 10.

Wireless vehicle components

The following information applies to all components of the vehicle and the information systems and communication devices integrated into the vehicle which receive and/or transmit radio waves:

The components of this vehicle that receive and/or transmit radio waves are compliant with the basic requirements and all other relevant conditions of Directive 2014/53/EU. You can obtain further information from a Mercedes-Benz Service Centre.

Jack

Copy and translation of the original declaration of conformity:

EC declaration of conformity

1.

The signatory, as a representative

Manufacturer:

BRANO a.s.

74741 Hradec nad Moravicí, Opavská 1000,

Czech Republic

ID No.: 64-387-5933

VAT Reg. No.: CZ64-387-5933

declares, as our sole responsibility, that the product:

2. a)

Description:

Jack

Type, number:

A) A 164 580 02 18, A 166 580 01 18

B) A 240 580 00 18

C) A 639 580 02 18

Manufacture year: 2015

Fulfils all relevant conditions

Directive No. 2006/42/EC

b)

Description and purpose of use:

The jack is only intended for raising the specified vehicle in accordance with the operating instructions affixed to the jack.

3.

Reference data of the harmonised standards or specifications

A) ISO 4063, EN ISO 14341-A, DBL 7382.20, MBN 10435, AS 2693

B) ISO 4063, ISO 14341-A, DBL 7392.10, MBN 10435

C) DBL 7392.10, DBL 8230.10

The technical documentation of the product is stored at the manufacturer's plant. Representative for the compilation of the technical documentation: Director of the Technical Department Brano a.s.

4.

Hradec nad Moravicí

City

5.

05.05.2015

Date

Signed by

Director of Quality

TIREFIT kit

Copy and translation of the original declaration of conformity:

EC declaration of conformity

In accordance with EC Directive 2006/42/EC

We hereby declare that the product

Product designation: Daimler electric air pump

Model designation: 0851ve, DT/UW 200046

MB part no.: A 000 583 8200

complies with the following relevant regulations:

2004/108/EC

Applied harmonised standards, in particular:

DIN EN 55014-1

DIN EN 55014-2:2009-06

Manufacturer: Dunlop Tech GmbH

Address: Birkenhainerstrasse 77, 63450 Hanau, Germany

Authorised representative: IMS dept.

Date: June 2015

Signature: IMS-AM, IMS-AE-L

Diagnostics connection

The diagnostics connection is only intended for the connection of diagnostic devices at a qualified specialist workshop.

⚠ **WARNING** Risk of accident due to connecting devices to the diagnostics connection

If you connect equipment to a diagnostics connection in the vehicle, it may affect the operation of vehicle systems.

As a result, the operating safety of the vehicle could be affected.

▶ Only connect equipment to a diagnostics connection in the vehicle which is approved for your vehicle by Mercedes-Benz.

⚠ **WARNING** Risk of accident due to objects in the driver's footwell

Objects in the driver's footwell may impede pedal travel or block a depressed pedal.

This jeopardises the operating and road safety of the vehicle.

▶ Stow all objects in the vehicle securely so that they cannot get into the driver's footwell.

▶ Always fit the floor mats securely and as prescribed in order to ensure that there is always sufficient room for the pedals.

▶ Do not use loose floor mats and do not place floor mats on top of one another.

! **NOTE** Battery discharging from using devices connected to the diagnostics connection

Using devices at the diagnostics connection drains the battery.

▶ Check the charge level of the battery.

▶ If the charge level is low, charge the battery, e.g. by driving a considerable distance.

Connecting equipment to the diagnostics connection can lead to emissions monitoring information being reset, for example. This may lead to the vehicle failing to meet the requirements of the next emissions inspection during the main inspection.

Qualified specialist workshop

A qualified specialist workshop has the necessary special skills, tools and qualifications to correctly carry out any necessary work on your vehicle. This particularly applies to work relevant to safety.

Always have the following work carried out on your vehicle at a qualified specialist workshop:

- work relevant to safety
- service and maintenance work
- repair work
- modifications as well as installations and conversions
- work on electronic components

Mercedes-Benz recommends a Mercedes-Benz service centre.

Vehicle registration

Mercedes-Benz may ask its service centres to carry out technical inspections on certain vehicles. The quality or safety of the vehicle is improved as a result of the inspection.

Mercedes-Benz can only inform you about vehicle checks if Mercedes-Benz has your registration data.

It is possible that your vehicle has not yet been registered in your name in the following cases:

- if your vehicle was not purchased at an authorised specialist dealer.
- if your vehicle has not yet been examined at a Mercedes-Benz service centre.

It is advisable to register your vehicle with a Mercedes-Benz service centre.

Inform Mercedes-Benz as soon as possible about any change in address or vehicle ownership. You can do this at a Mercedes-Benz service centre, for example.

Correct use of the vehicle

If you remove any warning stickers, you or others could fail to recognise certain dangers. Leave warning stickers in position.

When using the vehicle, observe the following information:

- the safety notes in this manual
- technical data for the vehicle
- traffic rules and regulations
- laws and safety standards pertaining to motor vehicles

Implied warranty

! **NOTE** Damage to the vehicle arising from violation of these operating instructions.

Damage to the vehicle can arise from violation of these operating instructions.

This damage is not covered either by the Mercedes-Benz implied warranty or by the New- or Used-Vehicle Warranty.

▶ Follow the instructions in these operating instructions on proper operation of your vehicle as well as on possible vehicle damage.

QR code for rescue card

The QR code is secured in the fuel filler flap and on the opposite side on the B-pillar. In the event of an accident, rescue services can use the QR code to quickly find the appropriate rescue card for your vehicle. The current rescue card contains the most important information about your vehicle in a compact form, e.g. the routing of the electric lines.

Further information can be obtained at http://www.mercedes-benz.de/qr-code.

Vehicle data storage

Information from electronic control units

Electronic control units are fitted in your vehicle. Some of these are necessary for the safe operation of your vehicle, while some assist you when driving (driver assistance systems). In addition, your vehicle provides convenience and entertainment functions, which are also made possible by electronic control units.

Electronic control units contain data memories which can temporarily or permanently store technical information about the vehicle's operating state, component loads, maintenance requirements and technical events or faults.

In general, this information documents the state of a component part, a module, a system or the surroundings such as:

- operating statuses of system components (e.g. fluid levels, battery status, tyre pressure)
- status messages concerning the vehicle and its individual components (e.g. number of wheel revolutions/speed, deceleration, lateral acceleration, display of the fastened seat belts)
- malfunctions or defects in important system components (e.g. lights, brakes)
- information on vehicle damage events
- system reactions in special driving situations (e.g. airbag deployment, intervention of stability control systems)
- ambient conditions (e.g. temperature, rain sensor)

In addition to providing the actual control unit function, this data assists the manufacturer in detecting and rectifying faults and optimising vehicle functions. The majority of this data is temporary and is only processed in the vehicle itself. Only a small portion of the data is stored in the event or fault memory.

When your vehicle is serviced, technical data from the vehicle can be read out by service network employees or third parties. Services include repair services, maintenance processes, warranty events and quality assurance measures, for example. The read out is performed via the legally prescribed port for OBD ("on-board diagnostics") in the vehicle. The respective service network locations or third parties collect, process and use the data. They document technical statuses of the vehicle, assist in finding faults and improving quality and are transmitted to the manufacturer, if necessary. Furthermore, the manufacturer is subject to product liability. For this, the manufacturer requires technical data from vehicles.

Fault memories in the vehicle can be reset by a service outlet as part of repair or maintenance work.

They can enter data into the vehicle's convenience and infotainment functions themselves as part of the selected equipment.

This includes, for example:

- multimedia data, such as music, films or photos for playback in an integrated multimedia system
- address book data for use in connection with an integrated hands-free system or an integrated navigation system
- entered navigation destinations
- data about the use of Internet services

This data can be stored locally in the vehicle or is located on a device which you have connected to the vehicle. If this data is stored in the vehicle, you can delete it at any time. This data can only be transmitted to third parties upon your request with particular regard to the scope of use of online services according to your selected settings.

You can store or change convenience settings/individualisations in the vehicle at any time.

Depending on the equipment, this includes, for example:

- settings of the seat positions
- suspension and climate control settings
- individualisation such as interior lighting

If your vehicle is accordingly equipped, you can connect your smartphone or another mobile end device to the vehicle. You can control them via the control elements integrated in your vehicle. Images and audio from the smartphone can be output via the multimedia system. Certain information is simultaneously transmitted to your smartphone.

Depending on the respective integration type, this includes, for example:

- general vehicle data
- position data

This enables the use of selected smartphone Apps, e.g. navigation or music playback. There is no further interaction between the smartphone and the vehicle; in particular, vehicle data is not directly accessible. Which type of further data processing occurs is determined by the provider of the specific app used. Which settings you can make, if any, depends on the specific app and the operating system of your smartphone.

Service providers

Wireless network connection

If your vehicle has a wireless network connection, it enables data to be exchanged between your vehicle and additional systems. The wireless network connection is enabled via the vehicle's transmission and reception unit or via connected mobile end devices (e.g. smartphones). Online functions can be used via the wireless network connection. This includes online services and applications/Apps provided by the manufacturer or other providers.

Manufacturer's services

The manufacturer describes the respective functions and corresponding legal data protection information when suitable for the manufacturer's online services. Personal data may be used for the provision of online services. Data is exchanged via a secure connection, e.g. to the manufacturer's designated IT systems. Personal data is collected, processed and used via the provision of services exclusively on the basis of legal permissions or with prior consent.

The services and functions (sometimes subject to a fee) can usually be activated or deactivated. In some cases, this also applies to the entire vehicle's data connection. This excludes, in particular, legally prescribed functions and services.

Third party services

If it is possible to use online services from other providers, these services are subject to the data protection and terms of use of the responsible

provider. The manufacturer has no influence on the content exchanged.

Please enquire, therefore, about the type, scope and purpose of the collection and use of personal data as part of third party services from their respective provider.

Copyright

Information on free and open-source software licences for your vehicle's software can be found on the data storage medium in your vehicle document wallet and on the Internet together with updates at:

http://www.mercedes-benz.com/opensource

Restraint system

Protection by the restraint system

The restraint system includes the following:

- Seat belt system
- Airbags
- Child restraint system
- Child seat securing system

The restraint system can reduce the risk of vehicle occupants coming into contact with parts of the vehicle interior in the event of an accident. In the event of an accident, the restraint system can also reduce the forces to which the vehicle occupants are subjected.

A seat belt can only provide the best level of protection if it is worn correctly. Depending on the detected accident situation, seat belt tensioners and/or airbags supplement the protection offered by a correctly worn seat belt. Seat belt tensioners and/or airbags are not deployed in every accident.

In order for the restraint system to provide the intended level of protection, each vehicle occupant must observe the following information:

- Fasten seat belts correctly.
- Sit in an almost upright seat position with their back against the seat backrest.
- Sit with their feet resting on the floor, if possible.
- Always secure persons under 1.50 m tall in an additional restraint system suitable for Mercedes-Benz vehicles.

However, no system available today can completely eliminate injuries and fatalities in every accident situation. In particular, the seat belt and airbag generally do not protect against objects penetrating the vehicle from the outside. It is also not possible to completely rule out the risk of injury caused by the airbag deploying.

Reduced restraint system protection

WARNING Risk of injury or death from modifications to the restraint system

The restraint system can no longer function correctly after alterations have been made.

The restraint system may then not protect the vehicle occupants as intended by failing in an accident or triggering unexpectedly, for example

- ▶ Never alter the parts of the restraint system.
- ▶ Never tamper with the wiring or any electronic component parts or their software.

If it is necessary to modify the vehicle to accommodate a person with disabilities, contact a qualified specialist workshop.

Mercedes-Benz recommends that you only use driving aids which have been approved specifically for your vehicle by Mercedes-Benz.

Restraint system functionality

When the ignition is switched on, a self-test is performed, during which the restraint system warning lamp lights up. It goes out no later than a few seconds after the vehicle is started. The components of the restraint system are then functional.

Malfunctioning restraint system

A malfunction has occurred in the restraint system if:

- The restraint system warning lamp does not light up when the ignition is switched on.
- The restraint system warning lamp lights up continuously or repeatedly during a journey.

WARNING Risk of injury or fatal injury due to a malfunction in the restraint system

If the restraint system is malfunctioning, restraint system components may be triggered unintentionally or might not be triggered at all in the event of an accident. This may affect the seat belt tensioner or airbag, for example.

▶ Have the restraint system checked and repaired immediately at a qualified specialist workshop.

Function of the restraint system in an accident

How the restraint system works is determined by the severity of the impact detected and the type of accident anticipated:

- Frontal impact
- Rear impact
- Side impact
- Only for certain countries: rollover

The activation thresholds for the components of the restraint system are determined based on the evaluation of the sensor values measured at various points in the vehicle. This process is preemptive in nature. The triggering/deployment of the components of the restraint system must take place in good time at the start of the collision.

Factors which can only be seen and measured after a collision has occurred cannot play a decisive role in airbag deployment, nor do they provide an indication of airbag deployment.

The vehicle may be deformed significantly without an airbag being deployed. This is the case if only parts which are relatively easily deformed are affected and the rate of vehicle deceleration is not high. Conversely, an airbag may be deployed even though the vehicle suffers only minor deformation. If very rigid vehicle parts such as longitudinal members are hit, for example, this may result in sufficiently high levels of vehicle deceleration.

The components of the restraint system can be activated or deployed independently of each other:

Component	Detected deployment situation
Seat belt tensioners	Frontal impact, rear impact, side impact, rollover[1)]
Driver's airbag, front passenger front airbag	Frontal impact
Knee airbag	Frontal impact
Side impact airbag	Side impact
Window airbag	Side impact, rollover[1)], frontal impact

[1)] Only for certain countries.

The front passenger front airbag can only be deployed in an accident if the PASSENGER AIR BAG OFF indicator lamp is off. If the front passenger seat is occupied, make sure, both before and during the journey, that the status of the front passenger front airbag is correct (→ page 41) (→ page 41).

WARNING Rick of burns from hot airbag components

The airbag parts are hot after an airbag has been deployed.

- ▶ Do not touch the airbag parts.
- ▶ Have a deployed airbag replaced at a qualified specialist workshop as soon as possible.

Mercedes-Benz recommends that you have the vehicle towed to a qualified specialist workshop after an accident. Take this into account, particularly if a seat belt tensioner is triggered or an airbag deployed.

If the seat belt tensioners are triggered or an airbag is deployed, you will hear a bang, and a small amount of powder may also be released:

- The bang will not generally affect your hearing.
- In general, the powder released is not hazardous to health but may cause short-term breathing difficulties to persons suffering from asthma or other pulmonary conditions.

  Provided it is safe to do so, leave the vehicle immediately or open the window in order to prevent breathing difficulties.

Seat belts

Protection provided by the seat belt

Always fasten your seat belt correctly before starting a journey. A seat belt can only provide the best level of protection if it is worn correctly.

WARNING Risk of injury or death due to incorrectly fastened seat belt

If the seat belt is not worn correctly, it cannot perform its intended protective function.

In addition, an incorrectly fastened seat belt can also cause injuries, for example, in the event of an accident or when braking or changing direction suddenly.

▶ Always ensure that all vehicle occupants have their seat belts fastened correctly and are sitting properly.

Always observe the instructions about the correct driver's seat position and adjusting the seat (→ page 86).

In order for the correctly worn seat belt to provide the intended level of protection, each vehicle occupant must observe the following information:

- The seat belt must not be twisted and must fit tightly and snugly across the body.
- The seat belt must be routed across the centre of the shoulder and as low down across the hips as possible.
- The shoulder section of the seat belt should not touch your neck nor be routed under your arm or behind your back.
- Avoid wearing bulky clothing, e.g. a winter coat.
- Push the lap belt down as far as possible across your hips and pull tight with the shoulder section of the belt. Never route the lap belt across your abdomen.
- Never route the seat belt across sharp, pointed, abrasive or fragile objects.
- Only one person should use each seat belt at any one time. Never allow babies and children to travel sitting on the lap of another vehicle occupant.
- Never secure objects with a seat belt if the seat belt is also being used by one of the vehicle's occupants. Always observe the instructions for loading the vehicle when securing objects, luggage or loads (→ page 98).

  Also ensure that no objects, e.g. a cushion, are ever placed between a person and the seat.

If children are travelling in the vehicle, be sure to observe the instructions and safety notes on "Children in the vehicle" (→ page 45).

Reduced seat belt protection

⚠ **WARNING** Risk of injury or death due to incorrect seat position

The seat belt does not offer the intended level of protection if you have not moved the seat backrest to an almost vertical position.

When braking or in the event of an accident, you could slide underneath the seat belt and sustain abdominal or neck injuries, for example.

▶ Adjust the seat properly before beginning your journey.

▶ Always ensure that the seat backrest is in an almost vertical position and that the shoulder section of your seat belt is routed across the centre of your shoulder.

WARNING Risk of injury or death when additional restraint systems are not used for persons with a smaller build

Persons under 1.50 m tall cannot wear the seat belt correctly without a suitable additional restraint system.

If the seat belt is not worn correctly, it cannot perform its intended protective function. In addition, an incorrectly fastened seat belt can also cause injuries, for example, in the event of an accident or when braking or changing direction suddenly.

▶ Always secure persons under 1.50 m tall in a suitable restraint system.

WARNING Risk of injury or death due to damaged or modified seat belts

Seat belts cannot provide protection in the following situations:

- If the seat belts are damaged, modified, extremely dirty, bleached or dyed
- If the seat belt buckle is damaged or extremely dirty
- If the seat belt tensioners, seat belt anchorages or seat belt retractors have been modified

Seat belts may be damaged in an accident, although the damage may not be visible, e.g. due to splinters of glass.

Modified or damaged seat belts may tear or fail, e.g. in an accident.

Modified seat belt tensioners could accidentally trigger or fail to function as intended.

▶ Never modify the seat belts, seat belt tensioners, seat belt anchorages or seat belt retractors.

▶ Make sure that the seat belts are undamaged, not worn and clean.

▶ Always have the seat belts checked immediately after an accident at a qualified specialist workshop.

Mercedes-Benz recommends that you only use seat belts which have been approved specifically for your vehicle by Mercedes-Benz.

WARNING Risk of injury or death from deployed pyrotechnic seat belt tensioners

Pyrotechnic seat belt tensioners that have been deployed are no longer operational and are unable to perform their intended protective function.

▶ Therefore, have deployed pyrotechnic seat belt tensioners immediately replaced at a qualified specialist workshop.

Mercedes-Benz recommends that you have the vehicle towed to a qualified specialist workshop after an accident.

NOTE Damage caused by trapping the seat belt

If an unused seat belt is not fully retracted, it may become trapped in the door or in the seat mechanism.

▶ Always ensure that an unused seat belt is fully retracted.

Fastening seat belts

If the seat belt is pulled quickly or sharply, the seat belt retractor locks. The seat belt strap cannot be pulled out any further.

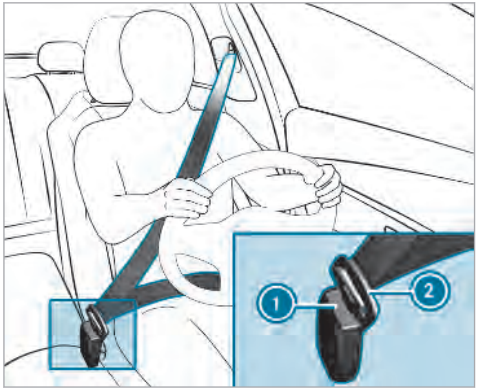

▶ Always engage seat belt tongue 2 of the seat belt into seat belt buckle 1 of the corresponding seat.

Vehicles with PRE-SAFE®: if the front seat belt is not pulled tight across your body, the seat belt adjustment may automatically apply a certain tightening force. Do not hold the seat belt tightly while it is adjusting. You can activate and deactivate the seat belt adjustment function using the multimedia system.

Vehicles with automatic front passenger front airbag deactivation system:

NOTE Deployment of the seat belt tensioner and side impact airbag when the front passenger seat is unoccupied

If the seat belt tongue is engaged in the seat belt buckle of the unoccupied front passenger seat, the seat belt tensioner and the side impact airbag may also deploy in the event of an accident along with other systems.

▶ Only one person should use each seat belt at any one time.

Vehicles without automatic front passenger front airbag deactivation system:

NOTE Deployment of the seat belt tensioner when the front passenger seat is unoccupied

If the seat belt tongue is engaged in the seat belt buckle of the unoccupied front passenger seat, the seat belt tensioner may also deploy in the event of an accident along with other systems.

▶ Only one person should use each seat belt at any one time.

Releasing a seat belt

▶ Press the release button in the seat belt buckle and guide the seat belt back with the seat belt tongue.

Activating/deactivating seat belt adjustment via the multimedia system

Multimedia system:

→ [⌂] ▸▸ Settings ▸▸ Vehicle

▶ Activate or deactivate Belt adjustment.

Seat belt warning function for the driver and front passenger

The [🪑] seat belt warning lamp in the instrument display is a reminder that all vehicle occupants must wear their seat belts correctly.

In addition, an acoustic warning tone may sound.

As soon as the driver and front passenger fasten their seat belts, the seat belt warning goes out.

Function of the rear seat belt status display

The rear seat belt status display is only available for certain countries.

The rear seat belt status display informs you which rear seat belt is not fastened.

You can immediately dismiss the rear seat belt status display using the back button on the left-hand side of the steering wheel (→ page 229).

If a vehicle occupant unfastens a seat belt in the rear while the vehicle is motion, the rear seat belt status display is displayed again.

In addition, an acoustic warning tone may sound. In this case, the rear seat belt status display cannot be hidden using the back button on the left-hand side of the steering wheel.

Airbags

Overview of airbags

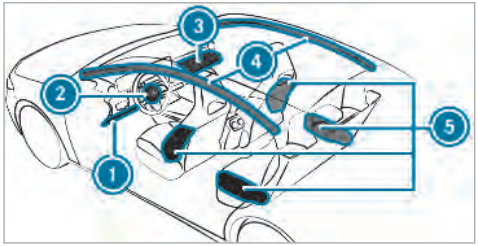

1. Knee airbag
2. Driver's airbag
3. Front passenger front airbag
4. Window airbag
5. Side impact airbag

The installation location of an airbag is identified by the AIRBAG symbol.

When activated, an airbag can provide additional protection for the respective vehicle occupant.

Potential protection from each airbag:

AIRBAG	Potential protection for ...
Knee airbag	Thigh, knee and lower leg
Driver's airbag, front passenger front airbag	Head and ribcage
Window airbag	Head
Side impact air-bag	Thorax and pelvis

The front passenger front airbag can only be deployed in an accident if the PASSENGER AIR BAG OFF indicator lamp is off. If the front passenger seat is occupied, make sure, both before and during the journey, that the status of the front passenger front airbag is correct (→ page 41) (→ page 41).

! NOTE Important points to remember if the front passenger seat is unoccupied

In an accident, the components of the restraint system may deploy unnecessarily on the front passenger side if:

- There are heavy objects on the front passenger seat.
- The seat belt tongue is engaged in the seat belt buckle of the front passenger seat and the front passenger seat is unoccupied.

▶ Stow objects in a suitable place.

▶ Only one person should use each seat belt at any one time.

Protection by the airbags

Depending on the accident situation, an airbag may supplement the protection offered by a correctly fastened seat belt.

WARNING Risk of injury or death due to incorrect seat position

If you deviate from the correct seat position, the airbag cannot perform its intended protective function and deployment may even cause further injuries.

To avoid hazardous situations, always make sure that all vehicle occupants:

- Have their seat belt fastened correctly, including pregnant women.
- Are seated properly and keep as far away as possible from the airbags.
- Observe the following information.

▶ Always make sure that there are no objects between the airbag and vehicle occupant.

To avoid the risks resulting from the deployment of an airbag, each vehicle occupant must observe the following information:

- Before starting your journey, adjust your seat correctly; the driver's seat and front passenger seat should be moved as far back as possible.

  When doing so, always observe the information on the correct driver's seat position (→ page 86).
- Only hold the steering wheel by the steering wheel rim. This allows the airbag to be fully deployed.
- Always lean against the seat backrest when the vehicle is in motion. Do not lean forwards or against the door or side window. You may otherwise be in the deployment area of the airbags.
- Always keep your feet on the floor. Do not put your feet on the cockpit, for example. Your feet may otherwise be in the deployment area of the airbag.
- If children are travelling in the vehicle, observe the additional notes (→ page 45).
- Always stow and secure objects correctly.

Objects in the vehicle interior may prevent an airbag from functioning correctly. Each vehicle occupant must always make sure of the following:

- There are no people, animals or objects between the vehicle occupants and an airbag.
- There are no objects between the seat, door and door pillar (B-pillar).
- There are no hard objects, e.g. coat hangers, hanging on the grab handles or coat hooks.
- There are no accessory parts, such as cup holders, attached to the vehicle within the deployment area of an airbag, e.g. on doors, side windows or side panelling.
- There are no heavy, sharp-edged or fragile objects in the pockets of your clothing. Store such objects in a suitable place.

Reduced airbag protection

WARNING Risk of injury from modifications to the airbag cover

If you modify an airbag cover or affix objects such as stickers to it, the airbag can no longer function correctly.

- Never modify an airbag cover and do not affix objects to it.

The installation location of an airbag is identified by the AIRBAG symbol (→ page 37).

WARNING Risk of injury or death due to the use of unsuitable seat covers

Unsuitable seat covers can obstruct or prevent the deployment of the airbags integrated into the seats.

Consequently, the airbags cannot protect vehicle occupants as they are designed to do. In addition, the operation of the automatic front passenger airbag shutoff could be restricted.

- You should only use seat covers that have been approved for the corresponding seats by Mercedes-Benz.

WARNING Risk of injury due to malfunctions of the sensors in the door panelling

Sensors to control the airbags are located in the doors. Modifications or work not performed correctly to the doors or door panelling, as well as damaged doors, can lead to the function of the sensors being impaired. The airbags might therefore not function properly any more.

Consequently, the airbags cannot protect vehicle occupants as they are designed to do.

- Never modify the doors or parts of the doors.
- Always have work on the doors or door panelling carried out at a qualified specialist workshop.

WARNING Risk of injury due to deployed airbag

A deployed airbag no longer offers any protection and cannot provide the intended protective function in the event of an accident.

- Have the vehicle towed to a qualified specialist workshop in order to have the deployed airbag replaced.

Have deployed airbags replaced immediately.

Status of the front passenger airbags

Function of the automatic front passenger front airbag deactivation system

The automatic front passenger front airbag deactivation system is able to detect whether the front passenger seat is occupied by a person or a child restraint system. The front passenger front airbag is enabled or disabled accordingly.

When fitting a child restraint system to the front passenger seat, always make sure of the following:

- Ensure that the child restraint system is positioned correctly (→ page 53).
- Always observe the child restraint system manufacturer's installation instructions.
- Never place objects, e.g. cushions, under or behind the child restraint system.
- Fully retract the seat cushion length adjustment.
- The entire base of the child restraint system must always rest on the sitting surface of the front passenger seat.
- The backrest of the forward-facing child restraint system must, as far as possible, be resting on the seat backrest of the front passenger seat.
- The child restraint system must not touch the roof or be put under strain by the head restraints. Adjust the seat backrest inclination and the head restraint setting accordingly.

⚠ **WARNING** Risk of injury or death due to objects between the seat surface and the child restraint system

Objects between the seat surface and the child restraint system could affect the function of the automatic front passenger front airbag shutoff.

This could result in the front passenger front airbag not functioning as intended during an accident.

- ▶ Do not place any objects between the sitting surface and the child restraint system.
- ▶ The entire base of the child restraint system must always rest on the sitting surface of the front passenger seat.
- ▶ The backrest of the forward-facing child restraint system must, as far as possible, be resting on the seat backrest of the front passenger seat.
- ▶ Always comply with the child restraint system manufacturer's installation instructions.

A person on the front passenger seat must observe the following information:

- Fasten seat belts correctly (→ page 32).
- Sit in an almost upright seat position with their back against the seat backrest.
- Sit with their feet resting on the floor, if possible.

Otherwise, the front passenger front airbag may be disabled by mistake, for example in the following situations:

- The front passenger transfers their weight by supporting themselves on a vehicle armrest.
- The front passenger sits in such a way that their weight is raised from the sitting surface.

⚠ **WARNING** Risk of injury or death due to deactivated front passenger airbag

If the PASSENGER AIRBAG OFF indicator lamp is lit, the front passenger airbag is disabled. It will not be deployed in the event of an accident and cannot perform its intended protective function.

A person in the front passenger seat could then, for example, come into contact with the vehicle interior, especially if the person is sitting too close to the cockpit.

If the front passenger seat is occupied, always ensure that:

- The classification of the person in the front passenger seat is correct and the front passenger airbag is enabled or disabled in accordance with the person in the front passenger seat.
- The front passenger seat has been moved as far back as possible.
- The person is seated correctly.

▶ Ensure, both before and during the journey, that the status of the front passenger airbag is correct.

If the front passenger seat is occupied, the classification of the person or child restraint system on the front passenger seat takes place after the front passenger front airbag deactivation system self-test. The status of the front passenger front airbag is displayed.

Always observe the notes on the function of the PASSENGER AIR BAG indicator lamps (→ page 41) (→ page 41).

Function of the PASSENGER AIR BAG indicator lamps

Self-test of the automatic front passenger front airbag deactivation system

When the ignition is switched on, a self-test is performed during which the two PASSENGER AIR BAG ON and OFF indicator lamps light up simultaneously.

The status of the front passenger front airbag is displayed after the self-test:

- PASSENGER AIR BAG ON lights up for 60 seconds, subsequently both indicator lamps are off (PASSENGER AIR BAG ON and OFF): the front passenger front airbag is able to deploy in the event of an accident.
- PASSENGER AIR BAG OFF lights up continuously: the front passenger front airbag is disabled. It will then not be deployed in the event of an accident.

If the PASSENGER AIR BAG ON indicator lamp is off, only the PASSENGER AIR BAG OFF indicator lamp shows the status of the front passenger front airbag. The PASSENGER AIR BAG OFF indicator lamp may be lit continuously or be off.

If the PASSENGER AIR BAG OFF indicator lamp and the restraint system warning lamp

light up simultaneously, the front passenger seat may not be used. Also in this case, do not install a child restraint system on the front passenger seat. Have the automatic front passenger front airbag shutoff checked and repaired immediately at a qualified specialist workshop.

Status display
If the front passenger seat is occupied, ensure, both before and during the journey, that the status of the front passenger front airbag is correct for the current situation.

After fitting a rearward-facing child restraint system to the front passenger seat: PASSENGER AIR BAG OFF must be lit continuously.

⚠ **WARNING** Risk of injury or death from using a rearward-facing child restraint system when the front passenger airbag is enabled

If you secure a child in a rearward-facing child restraint system on the front passenger seat and the PASSENGER AIR BAG OFF indicator lamp is off, the front passenger airbag can deploy in the event of an accident.

The child could be struck by the airbag.

Always ensure that the front passenger airbag is disabled. The PASSENGER AIR BAG OFF indicator lamp must be lit.

NEVER use a rearward facing child restraint on a seat protected by an ACTIVE FRONT AIRBAG in front of it; DEATH or SERIOUS INJURY to the CHILD can occur.

When fitting a child restraint system to the front passenger seat, observe the vehicle-specific information (→ page 52).

Depending on the child restraint system and the stature of the child, the PASSENGER AIR BAG OFF indicator lamp may be off. In this case, do not fit the rearward-facing child restraint system to the front passenger seat.

Instead, fit the rearward-facing child restraint system to a suitable rear seat.

After fitting a forward-facing child restraint system to the front passenger seat: depending on the child restraint system and the stature of the child, PASSENGER AIR BAG OFF may be lit continuously or be off. Always observe the following information.

⚠ **WARNING** Risk of injury or death due to incorrect positioning of the forward-facing child restraint system

If you secure a child in a forward-facing child restraint system on the front passenger seat and you position the front passenger seat too close to the dashboard, in the event of an accident, the child could:

- come into contact with parts of the vehicle's interior if the PASSENGER AIR BAG OFF indicator lamp is lit, for example
- be struck by the airbag if the PASSENGER AIR BAG OFF indicator lamp is off

▶ Always move the front passenger seat as far back as possible and fully retract the seat cushion length adjustment. Always make sure that the shoulder belt strap is correctly routed from the seat belt outlet on the vehicle to the shoulder belt guide on the child restraint sys-

tem. The shoulder belt strap must be routed forwards and downwards from the seat belt outlet. If necessary, adjust the front passenger seat accordingly.

▶ Always observe the child restraint system manufacturer's installation instructions.

When fitting a child restraint system to the front passenger seat, observe the vehicle-specific information (→ page 52).

If a person is sitting in the front passenger seat: PASSENGER AIR BAG OFF may be lit continuously or be off, depending on the person's stature.

A person on the front passenger seat must always observe the following information:

- If the front passenger seat is occupied with an adult or a person with a stature corresponding to that of an adult, the PASSENGER AIR BAG OFF indicator lamp must be off. This indicates that the front passenger front airbag is enabled.

  If the PASSENGER AIR BAG OFF indicator lamp is lit continuously, an adult or person with a build corresponding to that of an adult should not use the front passenger seat. Instead, they should use a rear seat.

- If the front passenger seat is occupied by a person of smaller stature (e.g. a teenager or small adult), the PASSENGER AIR BAG OFF indicator lamp either lights up continuously or remains off, depending on the result of the classification.
  - If the PASSENGER AIR BAG OFF indicator lamp is off: move the front passenger seat as far back as possible, or a person of smaller stature should use a rear seat.
  - If the PASSENGER AIR BAG OFF indicator lamp is lit continuously: a person of smaller stature should not use the front passenger seat.

⚠ **WARNING** Risk of injury or death when the PASSENGER AIR BAG OFF indicator lamp is lit

If the PASSENGER AIR BAG OFF indicator lamp remains lit after the system self-test, the front passenger airbag is disabled. It will not be deployed in the event of an accident. In this case, the front passenger airbag cannot perform its intended protective function, e.g. when a person is seated in the front passenger seat.

That person could, for example, come into contact with the vehicle interior, especially if the person is sitting too close to the cockpit.

If the front passenger seat is occupied, always ensure that:

- The classification of the person in the front passenger seat is correct and the front passenger airbag is enabled or disabled in accordance with the person in the front passenger seat.

- The person is seated properly with a correctly fastened seat belt.
- The front passenger seat has been moved as far back as possible.

Further related subjects:

- Child restraint system on the front passenger seat (→ page 51).
- Suitable positioning of the child restraint system (→ page 53).

PRE-SAFE® system

PRE-SAFE® (anticipatory occupant protection)

PRE-SAFE® is able to detect certain critical driving situations and implement pre-emptive measures to protect the vehicle occupants.

PRE-SAFE® can implement the following measures independently of each other:

- Tightening the seat belts on the driver's seat and front passenger seat.
- Closing the side windows.
- **Vehicles with sliding sunroof:** closing the sliding sunroof.
- **Vehicles with memory function:** moving the front passenger seat to a more favourable seat position.
- PRE-SAFE® Sound: provided that the multimedia system is switched on, generates a brief noise signal to stimulate the innate protective mechanism of a person's hearing.

! **NOTE** Damage caused by objects in the footwell or behind the seat

The automatic adjustment of the seat position may result in damage to the seat and/or the object.

▶ Stow objects in a suitable place.

Reversing the PRE-SAFE® system measures

If an accident did not occur, the pre-emptive measures that were taken are reversed.

You will need to perform certain settings yourself.

▶ If the seat belt pre-tensioning is not reduced, move the seat backrest back slightly.
The locking mechanism releases.

Function of PRE-SAFE® PLUS (anticipatory occupant protection plus)

PRE-SAFE® PLUS can detect certain impacts, particularly an imminent rear impact, and take pre-emptive measures to protect the vehicle occupants. These measures cannot necessarily prevent an imminent impact.

PRE-SAFE® PLUS can implement the following measures independently of each other:

- Tightening the seat belts on the driver's seat and front passenger seat.
- Activating the rear hazard warning lights at a higher flashing frequency.
- Increasing brake pressure when the vehicle is stationary. This brake application is cancelled automatically when the vehicle pulls away.

If an accident did not occur, the pre-emptive measures that were taken are reversed.

System limitations

The system will not initiate any action in the following situations:

- when reversing

  or

- when the vehicle is towing a trailer and there is a risk of a rear impact

The system will not initiate any braking application in the following situations:

- whilst driving

  or

- when entering or exiting a parking space while using Active Parking Assist

Children in the vehicle

Notes on the safe transportation of children

⚠ **WARNING** Risk of accident and injury due to children left unattended in the vehicle

If you leave children unattended in the vehicle, they may be able to set the vehicle in motion, for example by:

- Releasing the parking brake.
- Shifting the automatic transmission out of park position P or shifting manual transmission into idle position.
- Starting the engine.

In addition, they may operate vehicle equipment and become trapped.

▶ Never leave children and animals unattended in the vehicle.

▶ When leaving the vehicle, always take the key with you and lock the vehicle. This also applies to the Digital Vehicle Key sticker and mobile phones if the "Digital Vehicle Key in the smartphone" function is activated via the Mercedes me connect web app.

⚠ **WARNING** This poses an increased risk of death due to heat stroke or exposure to cold in the vehicle

If persons – particularly children – experience prolonged exposure to extremely high or low temperatures, this poses a risk of injury or even fatal injury.

▶ Never leave anyone – particularly children – unattended in the vehicle.

⚠ **WARNING** Risk of burns when the child seat is exposed to direct sunlight

If the child restraint system is exposed to direct sunlight or heat, parts could heat up.

Children could suffer burns on these parts, particularly on metallic parts of the child restraint system.

- ▶ Always make sure that the child restraint system is not exposed to direct sunlight.
- ▶ Protect it with a blanket, for example.
- ▶ If the child restraint system has been exposed to direct sunlight, allow it to cool before securing a child into it.
- ▶ Never leave children unattended in the vehicle.

To improve protection for children younger than 12 years old or under 1.50 m in height, Mercedes-Benz recommends you observe the following information:

- Only secure children using a child restraint system which is appropriate to the height, age and weight of the child and suitable for Mercedes-Benz vehicles. Be sure to observe the instructions for correct use of the child restraint system.
- Always fit a child restraint system to a rear seat if possible.
- Only use the following securing systems for child restraint systems:
  - the seat belt system
  - the ISOFIX or i-Size mounting brackets
  - the Top Tether anchorages
- The manufacturer's installation instructions for the child restraint system.
- The warning labels in the vehicle interior and on the child restraint system.

⚠ **WARNING** Risk of injury or death caused by incorrect installation of the child restraint system

If the child restraint system is incorrectly installed on a suitable seating position, it cannot perform its intended protective function.

The child cannot be restrained in the event of an accident, heavy braking or a sudden change of direction.

- ▶ Always comply with the manufacturer's installation instructions for the child restraint system and its correct use.
- ▶ Make sure that the entire base of the child restraint system always rests on the sitting surface of the seat.
- ▶ Never place objects under or behind the child restraint system, e.g. cushions.
- ▶ Always use child restraint systems with the original cover designed for them.
- ▶ Always replace damaged covers with genuine covers.

⚠ **WARNING** Risk of injury or death from unsecured child restraint systems in the vehicle

If the child restraint system is not correctly installed or secured, it could release in the event of an accident, sudden braking or a sudden change in direction.

The child restraint system could be flung around and hit vehicle occupants.

- ▶ Always fit child restraint systems correctly, even when not in use.

▶ Always comply with the child restraint system manufacturer's installation instructions.

⚠ **WARNING** Risk of injury or death caused by the use of damaged child restraint systems

Child restraint systems or their retaining systems that have been subjected to a load in an accident may then not be able to perform their intended protective function.

The child cannot be restrained in the event of an accident, heavy braking or a sudden change of direction.

▶ Always replace child restraint systems immediately that have been damaged or involved in an accident.

▶ Have the securing systems for the child restraint systems checked at a qualified specialist workshop before installing a child restraint system again.

ⓘ Use Mercedes-Benz care products recommended by Mercedes-Benz to clean child restraint systems. Further information can be obtained at a qualified specialist workshop.

The following notes must be observed:

- When fitting a child restraint system on the front passenger seat, the information on fitting a child restraint system on the front passenger seat (→ page 51).
- Notes on attaching suitable child restraint systems (→ page 53).
- Notes on recommended child restraint systems (→ page 59).
- Instructions and safety notes on the automatic front passenger front airbag shutoff (→ page 39).
- Safety notes on the seat belt (→ page 32).
- Information on the correct use of the seat belt (→ page 35).

ISOFIX and i-Size child seat securing systems

Information on the ISOFIX and i-Size child seat securing systems

⚠ **WARNING** Risk of injury or fatal injury if the child secured weighs more than the permissible gross weight for an ISOFIX or i-Size child restraint system

For ISOFIX or i-Size child restraint systems in which the child is secured using the seat belt integrated in the child restraint system, the permissible gross weight of the child and child restraint system is 33 kg.

If the child and the child restraint system together weigh more than 33 kg, the ISOFIX or i-Size child restraint system with integrated seat belt does not offer sufficient protection. Too much load may be placed on the ISOFIX or i-Size child restraint systems and the child may not be restrained correctly in the event of an accident, for example.

▶ If the child and the child restraint system together weigh more than 33 kg, only use an ISOFIX or i-Size child

restraint system with which the child is secured with the vehicle seat belt.

▶ Also secure the child restraint system with the Top Tether belt, if available.

Always comply with the information about the mass of the child restraint system:

- in the manufacturer's installation and operating instructions for the child restraint system used
- on a label on the child restraint system, if present

Regularly check that the permissible gross mass of the child and child restraint system is still complied with.

When using a child restraint system, be sure to observe the manufacturer's installation and operating instructions as well as its correct use and the suitability of the seats for attaching a child restraint system.
ISOFIX and i-Size are standardised securing systems for special restraint systems. ISOFIX child restraint systems are approved in accordance with ECE R44, i-Size child restraint systems are approved in accordance with ECE R129.

Only child restraint systems that have been approved in accordance with ECE R44 may be attached to ISOFIX mounting brackets.

The following child restraint systems can be attached to i-Size mounting brackets:

- ISOFIX child restraint systems that are approved in accordance with ECE R44
- i-Size child restraint systems that are approved in accordance with ECE R129

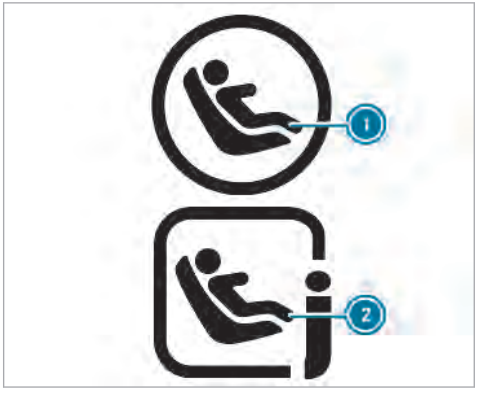

1 Symbol for fitting an ISOFIX child restraint system
2 Symbol for fitting an i-Size child restraint system

Fitting ISOFIX and i-Size child seat securing systems

⚠ **WARNING** Risk of injury or fatal injury if the child secured weighs more than the permissible gross weight for an ISOFIX or i-Size child restraint system

For ISOFIX or i-Size child restraint systems in which the child is secured using the seat belt integrated in the child restraint system, the permissible gross weight of the child and child restraint system is 33 kg.

If the child and the child restraint system together weigh more than 33 kg, the ISOFIX or i-Size child restraint system with integrated seat belt does not offer sufficient protection. Too much load may be placed on the ISOFIX or i-Size child restraint systems and the child may not be restrained correctly in the event of an accident, for example.

▶ If the child and the child restraint system together weigh more than 33 kg, only use an ISOFIX or i-Size child restraint system with which the child is secured with the vehicle seat belt.

▶ Also secure the child restraint system with the Top Tether belt, if available.

Always comply with the information about the mass of the child restraint system

- in the manufacturer's installation and operating instructions for the child restraint system used
- on a label on the child restraint system, if present

Regularly check that the permissible gross mass of the child and child restraint system is still complied with.

When using a child restraint system, be sure to observe the manufacturer's installation and operating instructions as well as its correct use and the suitability of the seats for attaching a child restraint system.

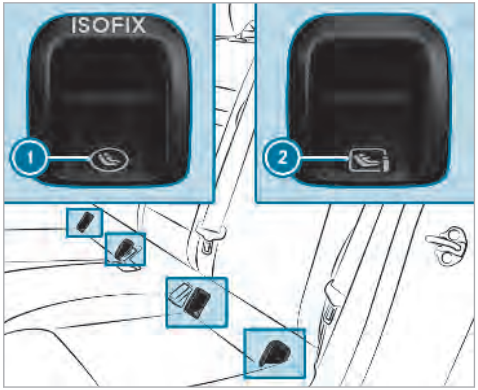

① ISOFIX mounting brackets
② i-Size mounting brackets

Before every trip, make sure that the ISOFIX child restraint system or the i-Size child restraint system is engaged correctly in both ISOFIX or i-Size mounting brackets.

NOTE Damage to the seat belt for the centre seat

When fitting a child restraint system, the seat belt for the centre seat could be damaged.

- Make sure that the seat belt is not trapped.

- Attach the ISOFIX child restraint system to both ISOFIX mounting brackets ① or i-Size mounting brackets ②.

or

- Attach the i-Size child restraint system to both i-Size mounting brackets ②.

Securing Top Tether

WARNING Risk of injury or death if the rear seat backrests are not locked after fitting Top Tether belts

If the rear seat backrests are not locked, they could fold forwards in the event of an accident, heavy braking or sudden changes of direction.

As a result, child restraint systems cannot perform their intended protective function. Rear seat backrests that are not locked can also cause additional injuries, e.g. in the event of an accident.

- Always lock rear seat backrests after fitting Top Tether belts.
- Observe the lock verification indicator.

If the rear seat backrest is not engaged and locked, the red lock verification indicator will be visible.

The risk of injury can be reduced by Top Tether. The Top Tether belt facilitates an additional connection between the child restraint system attached with ISOFIX or i-Size and the vehicle.

The child restraint system must be equipped with a Top Tether belt.

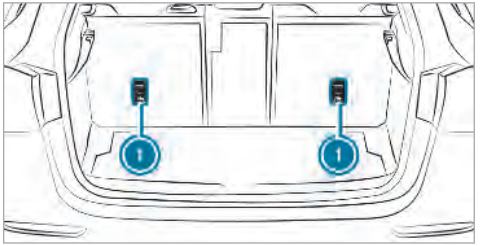

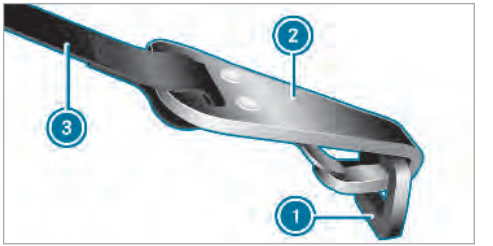

Vehicles with adjustable head restraints:

- If necessary, move the head restraint upwards (→ page 91).

▶ Route Top Tether belt ③ under the head restraint between the two head restraint bars.

Vehicles without adjustable head restraints:

▶ Top Tether belt with a seat belt strap: guide Top Tether belt ③ over the centre of the head restraint.

or

▶ Top Tether belt with two seat belt straps: guide each Top Tether belt ③ to the right and left side of the head restraint.

All vehicles

▶ Fit the ISOFIX or i-Size child restraint system with Top Tether. Always comply with the child restraint system manufacturer's installation instructions when doing so.

▶ Hook Top Tether hook ② into Top Tether anchorage ① without twisting it.

▶ Tension Top Tether belt ③. Always comply with the child restraint system manufacturer's installation instructions when doing so.

Vehicles with adjustable head restraints:

▶ If necessary, slide the head restraint downwards (→ page 91). Make sure that you do not interfere with the correct routing of Top Tether belt ③.

Child restraint systems on the front passenger seat

Notes on child restraint systems on the front passenger seat

Accident statistics show that children secured in the rear seats are safer than children secured in the front seats. For this reason, Mercedes-Benz strongly advises that you install a child restraint system on a rear seat.

If it is absolutely necessary to install a child restraint system on the front passenger seat, always observe the information on the automatic front passenger front airbag shutoff (→ page 39).

By doing this, you can avoid risks caused by:

- A child restraint system that is not detected by the automatic front passenger front airbag shutoff.
- The unintentionally disabled front passenger front airbag.
- Incorrect positioning of the child restraint system.

Warning notice on the front passenger sun visor:

⚠ **WARNING** Risk of injury or death from using a rearward-facing child restraint system when the front passenger airbag is enabled

If you secure a child in a rearward-facing child restraint system on the front passenger

seat and the PASSENGER AIR BAG OFF indicator lamp is off, the front passenger airbag can deploy in the event of an accident.

The child could be struck by the airbag.

Always ensure that the front passenger airbag is disabled. The PASSENGER AIR BAG OFF indicator lamp must be lit.

NEVER use a rearward facing child restraint on a seat protected by an ACTIVE FRONT AIRBAG in front of it; DEATH or SERIOUS INJURY to the CHILD can occur.

If the PASSENGER AIR BAG OFF indicator lamp goes out, the front passenger front airbag is enabled.

Be sure to observe the notes on the safe transportation of children (→ page 45).

Notes on vehicles without the automatic front passenger front airbag shutoff

Vehicles without automatic front passenger front airbag shutoff have a special sticker affixed to the side of the cockpit on the front passenger side.

Never install a rearward-facing child restraint system on the front passenger seat:

Make sure you observe the following information:

- On forward-facing and rearward-facing child restraint systems on the front passenger seat (→ page 52).
- On attaching suitable child restraint systems (→ page 53).

Notes on forward-facing and rearward-facing child restraint systems on the front passenger seat

When using a rearward-facing child restraint system on the front passenger seat, the front passenger front airbag must always be disabled. This is only the case if the PASSENGER AIR BAG OFF indicator lamp is lit continuously (→ page 41).

When using the child restraint system on the front passenger seat, it is essential to observe the following:

- Move the front passenger seat as far back as possible.
- Set the seat backrest to an almost vertical position.
- Retract the seat cushion length as far as possible.
- The entire base of the child restraint system must always rest on the sitting surface of the front passenger seat.
- The backrest of the forward-facing child restraint system must, as far as possible, be resting on the seat backrest of the front

passenger seat. The child restraint system must not touch the roof or be put under strain by the head restraints.

- If necessary, adjust the angle of the seat backrest and the head restraint position accordingly.
- Adjust the seat cushion inclination so that the front edge of the seat cushion is in the highest position and the rear edge of the seat cushion is in the lowest position.
- Always make sure that the shoulder belt strap is correctly routed from the seat belt outlet of the vehicle to the shoulder belt guide on the child restraint system. The shoulder belt strap must be routed forwards and downwards from the seat belt outlet.
- If necessary, adjust the seat belt outlet and the front passenger seat accordingly.
- Never place objects under or behind the child restraint system, e.g. cushions.

Always comply with the manufacturer's installation and operating instructions for the child restraint system used, and the notes on fitting suitable child restraint systems (→ page 53).

Suitability of the seats for child restraint systems

Notes on attaching suitable child restraint systems

Only child restraint systems with the following ECE standards are permitted for use in the vehicle:

- ECE R44
- ECE-R129 (i-Size child restraint systems)

Examples of approval labels on child restraint systems:

Label for child restraint systems in accordance with ECE R-44

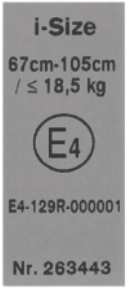

Label for child restraint systems in accordance with ECE R-129

ISOFIX or i-Size child restraint systems of the following "Universal" category can be used, in accordance with the tables on suitability of seats for the attachment of child restraint systems, on seats marked U, UF, IUF or i-U.

Semi-universal child restraint systems are indicated by the text "semi-universal" on the approval label. They can only be used if the vehicle and the seat are listed in the child restraint system manufacturer's vehicle model list.

Notes on the suitability of seats for attaching belt-secured child restraint systems

Observe the following information:

- **When using a baby car seat of the category 0/0+ and a rearward-facing child restraint system on a rear seat:** adjust the driver's and front passenger seat such that the seat does not touch the child restraint system.
- **When using a forward-facing child restraint system of category I**: remove the head restraint from the respective seat, if possible (→ page 92). In addition, the seat backrest of the child restraint system must, as far as possible, lie flat against the backrest of the vehicle seat.
- When you remove the child restraint system, fit the head restraint immediately (→ page 92) and adjust all the head restraints again correctly.
- For certain child restraint systems in weight categories II or III, there may be certain restrictions in the maximum size setting, e.g. due to possible contact with the roof.
- Make sure that the child's feet do not touch the front seat. If necessary, move the front seat forward slightly.
- The child restraint system must not touch the roof or be put under strain by the head restraints. Adjust the head restraints accordingly.
- Observe the manufacturer's installation instructions for the child restraint system.

Legend for the table:

X	Not suitable for children in this weight category.
U	Suitable for child restraint systems of the "Universal" category in this weight category.

UF	Suitable for forward-facing child restraint systems of the "Universal" category in this weight category.
L	Suitable for semi-universal child restraint systems according to the table in "Recommended child restraint systems", or if the vehicle and the seat are listed in the child restraint system manufacturer's vehicle model list.

Front passenger seat:

Weight categories	Front passenger front airbag enabled	Front passenger front airbag disabled[1]
Category 0: up to 10 kg	X	U, L
Category 0+: up to 13 kg	X	U, L
Category I: 9 to 18 kg	UF, L	U, L
Category II: 15 to 25 kg	UF, L	U, L
Category III: 22 to 36 kg	UF, L	U, L

[1] The vehicle is equipped with automatic front passenger front airbag shutoff. The PASSENGER AIR BAG OFF indicator lamp must be lit.

Rear seats:

Weight categories	Left, right	Centre[1]
Category 0: up to 10 kg	U, L	U, L
Category 0+: up to 13 kg	U, L	U, L
Category I: 9 to 18 kg	U, L	U, L
Category II: 15 to 25 kg	U, L	X
Category III: 22 to 36 kg	U, L	X

[1] Child restraint systems with a supporting bracket are not suitable for this seat.

Notes on the suitability of seats for attaching ISOFIX child restraint systems

Observe the following information:

- **When using a baby car seat of category 0/0+ and a rearward-facing child restraint system of category I on a rear seat:** adjust the driver's and front passenger seat such that the seat does not touch the child restraint system.
- **When using a forward-facing child restraint system of category I**: remove the head restraint from the respective seat, if possible (→ page 92). In addition, the seat backrest of the child restraint system must, as far as possible, lie flat against the backrest of the vehicle seat.
- When you remove the child restraint system, fit the head restraint immediately (→ page 92) and adjust all the head restraints again correctly.
- For certain child restraint systems in weight categories II or III, there may be certain restrictions in the maximum size setting, e.g. due to possible contact with the roof.
- Make sure that the child's feet do not touch the front seat. If necessary, move the front seat forward slightly.

- The child restraint system must not touch the roof or be put under strain by the head restraints. Adjust the head restraints accordingly.
- Observe the manufacturer's installation instructions for the child restraint system.

Legend for the table:

X	Not suitable for an ISOFIX child restraint system in this weight category and/or size category.
IUF	Suitable for forward-facing ISOFIX child restraint systems of the "Universal" category in this weight category.
IL	Suitable for ISOFIX child restraint systems according to the table in "Overview of the recommended child restraint systems", or if the vehicle and the seat are listed in the child restraint system manufacturer's vehicle model list.

Weight categories	Size category	Equipment	Rear seat Left, right
Carry cot	F G	ISO/L1 ISO/L2	X X
Category 0: up to 10 kg and approx. 6 months	E	ISO/R1	IL
Category 0+: up to 13 kg and approx. 15 months	E D C	ISO/R1 ISO/R2 ISO/R3	IL IL IL[1]

Weight categories	Size category	Equipment	Rear seat Left, right
Category I: 9 to 18 kg and between approx. 9 months and 4 years	D	ISO/R2	IL
	C	ISO/R3	IL[1]
	B	ISO/F2	IUF
	B1	ISO/F2X	IUF
	A	ISO/F3	IUF

[1] When using a child restraint system of size category C (ISO/R3), move the front seat to the highest position. Make sure that the seat backrest of the front seat does not rest against the child restraint system.

Notes on the suitability of seats for attaching i-Size child restraint systems

Observe the following information:

- **When using a rearward-facing child restraint system:** adjust the front seat so that it does not touch the child restraint system.
- **When using a forward-facing child restraint system:** remove the head restraint from the respective seat, if possible (→ page 92). In addition, the seat backrest of the child restraint system must, as far as possible, lie flat against the backrest of the vehicle seat.
- When you remove the child restraint system, fit the head restraint immediately (→ page 92) and adjust all the head restraints again correctly.
- Make sure that the child's feet do not touch the front seat. If necessary, move the front seat forward slightly.
- Observe the manufacturer's installation instructions for the child restraint system.

Legend for the table:

X	Not suitable for an i-Size child restraint system in the "Universal" category.
i-U	Suitable for forward-facing and rearward-facing i-Size child restraint systems in the "Universal" category.

	Front passenger seat	Left rear seat	Centre rear seat	Right rear seat
i-Size child restraint system	X	i-U	X	i-U

Overview of recommended child restraint systems

Recommended child restraint systems for attaching with the vehicle seat belt

Weight categories	Manufacturer	Type	Approval number (E1 ...)	Order number (A 000 ...) colour code 9H95
Category 0: up to 10 kg up to approximately 6 months	Britax Römer	BABY SAFE plus II	04 301 146	970 36 00 970 57 00
Category 0+: up to 13 kg up to approximately 15 months	Britax Römer	BABY SAFE plus II	04 301 146	970 36 00 970 57 00
Category I: 9 to 18 kg between approximately 9 months and 4 years	Britax Römer	DUO plus	04 301 133	970 37 00 970 58 00

Weight categories	Manufacturer	Type	Approval number (E1 ...)	Order number (A 000 ...) colour code 9H95
Category II/III: 15 to 36 kg between approximately 4 and 12 years	Britax Römer	KIDFIX	04 301 198	970 38 00 970 59 00
	Britax Römer	KIDFIX XP	04 301 304	970 61 00

Recommended "Universal" and "Semi-Universal" category ISOFIX child restraint systems

Weight categories	Size category	Manufacturer	Type	Approval number (E1 ...)	Order number (colour code: 9H95)
Category 0+: up to 13 kg up to approximately 15 months	E	Britax Römer	BABY SAFE plus	04 301 146	B6 6 86 8224
Category I: 9 to 18 kg	B1	Britax Römer	DUO plus	04 301 133	A 000 970 37 00 A 000 970 58 00

ⓘ You can obtain further information on the correct child restraint system at any Mercedes-Benz Service Centre.

Child safety locks

Activating/deactivating the child safety lock for the rear doors

⚠ **WARNING** Risk of accident and injury due to children left unattended in the vehicle

If you leave children unattended in the vehicle, they may be able to set the vehicle in motion, for example by:

- Releasing the parking brake.
- Shifting the automatic transmission out of park position P or shifting manual transmission into idle position.
- Starting the engine.

In addition, they may operate vehicle equipment and become trapped.

▶ Never leave children and animals unattended in the vehicle.

▶ When leaving the vehicle, always take the key with you and lock the vehicle. This also applies to the Digital Vehicle Key sticker and mobile phones if the "Digital Vehicle Key in the smartphone" function is activated via the Mercedes me connect web app.

⚠ **WARNING** This poses an increased risk of death due to heat stroke or exposure to cold in the vehicle

If persons – particularly children – experience prolonged exposure to extremely high or low temperatures, this poses a risk of injury or even fatal injury.

▶ Never leave anyone – particularly children – unattended in the vehicle.

⚠ **WARNING** Risk of accident and injury due to children left unattended in the vehicle

If children are travelling in the vehicle, they could:

- open doors, thereby endangering other persons or road users.
- get out of the vehicle and be hit by oncoming traffic.
- operate vehicle equipment and become trapped, for example.

▶ Always activate the child safety locks installed if children are travelling in the vehicle.

▶ Never leave children unattended in the vehicle.

▶ When leaving the vehicle, always take the key with you and lock the vehicle. This also applies to the Digital Vehicle Key sticker and mobile phones if the "Digital Vehicle Key in the smartphone"

function is activated via the Mercedes me connect web app.

Child safety locks for the rear doors and an override feature for the rear side windows are available.
The child safety lock on the rear doors secures each door separately. The doors can no longer be opened from the inside.

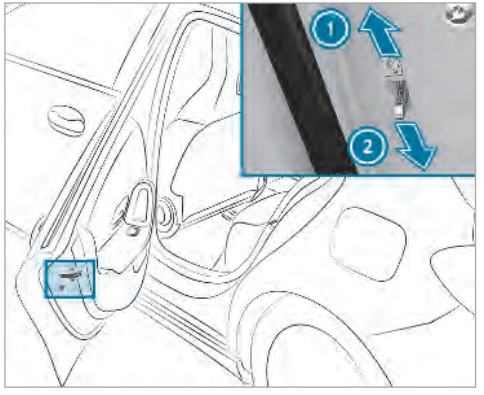

- Press the lever in direction 1 (activate) or 2 (deactivate).
- Make sure that the child safety locks are working properly.

Activating/deactivating the override feature for the rear side windows

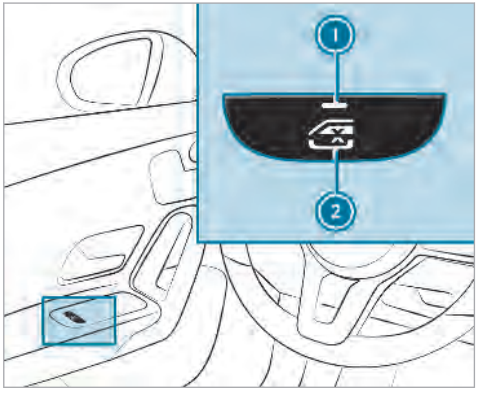

- **To activate/deactivate:** press button 2.

Opening/closing the side window in the rear is possible:

- With indicator lamp 1 lit: via the switch on the driver's door.
- With indicator lamp 1 off: via the switch on the corresponding rear door or driver's door.

Notes on pets in the vehicle

WARNING Risk of accident and injury due to animals left unsecured or unattended in the vehicle

If you leave animals in the vehicle unattended or unsecured, they could possibly press down buttons or switches.

Thereby an animal may:

- activate vehicle equipment and become trapped, for example
- switch systems on or off and endanger other road users

Unsecured animals may be thrown around in the vehicle in the event of an accident or sudden steering and braking manoeuvres and injure vehicle occupants in the process.

- Never leave animals in the vehicle unattended.
- Always correctly secure animals while driving, e.g. using a suitable animal carrier.

Key

Overview of key functions

⚠ **WARNING** Risk of accident and injury due to children left unattended in the vehicle

If children are left unattended in the vehicle, they could:

- open doors, thereby endangering other persons or road users.
- get out of the vehicle and be hit by oncoming traffic.
- operate vehicle equipment and become trapped, for example.

In addition, children could also set the vehicle in motion, for example, by:

- releasing the parking brake.
- shifting the automatic transmission out of park position P or shifting manual transmission into neutral.
- starting the engine.

▶ When leaving the vehicle, always take the key with you and lock the vehicle.

▶ Never leave children and animals unattended in the vehicle.

▶ Keep the vehicle key out of reach of children.

! **NOTE** Damage to the key caused by magnetic fields

▶ Keep the key away from strong magnetic fields.

1. Locks
2. Battery check lamp
3. Unlocks

ⓘ The key may vary from the one shown in the diagram, depending on the vehicle equipment.

The key locks and unlocks the following components:

- The doors
- The fuel filler flap
- The tailgate

The indicator lamp in the door trim on the driver's side flashes when the vehicle is locked from outside. The indicator lamp goes out if the vehicle is locked from inside or while the vehicle is in motion.

If you do not open the vehicle within approximately 40 seconds after unlocking:

- The vehicle is locked again
- Anti-theft protection is reactivated

Do not keep the key together with electronic devices or metal objects. This can affect the key's functionality.

ⓘ If battery check lamp ② does not light up after pressing the [🔓] or [🔒] button, the battery is discharged.

Replacing the key battery (→ page 66).

Activating/deactivating the acoustic locking verification signal

Multimedia system:

→ [⌂] ▸▸ Settings ▸▸ Vehicle

▶ Activate or deactivate Acoustic lock.

Activating/deactivating the panic alarm

Requirements:

ⓘ The panic alarm function is only available in certain countries.

- The ignition is switched off.

▶ **To activate:** press button ① for approximately one second.
A visual and audible alarm is triggered.

▶ **To deactivate:** briefly press button ① again.

or

▶ Press the start/stop button on the cockpit (the key is inside the vehicle).

Changing the unlocking settings

Possible unlocking functions of the key:

- Central unlocking
- Unlocking the driver's door and fuel filler flap

▶ **To switch between settings:** press the [🔓] and [🔒] buttons simultaneously for approximately six seconds until the battery check lamp flashes twice.

If the unlocking function for the driver's door and fuel filler flap has been selected:

- Pressing the [🔓] button a second time centrally unlocks the vehicle.
- **Vehicles with KEYLESS-GO:** if you touch the inner surface of the door handle on the driver's door, only the driver's door and fuel filler flap are unlocked.

Reducing the energy consumption of the key

All vehicles: if you do not use the vehicle or a key for an extended period of time, you can reduce the energy consumption of the respective key. To do so, deactivate the key functions.

- **To deactivate:** press the [🔒] button on the key twice in quick succession.
  The battery check lamp of the key flashes twice briefly and lights up once.
- **To activate:** press any button on the key.

ⓘ When the vehicle is started with the key in the stowage compartment of the centre console, the key functions are automatically activated (→ page 143).

Removing/inserting the emergency key

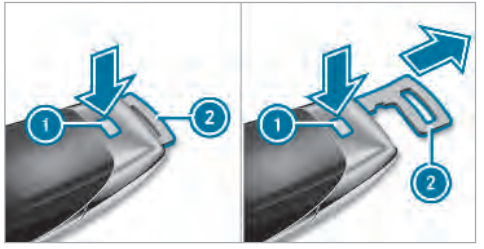

- **To remove:** press release knob ①.
  Emergency key ② is pushed out slightly.
- Pull out emergency key ② until it engages in the intermediate position.

ⓘ You can use the intermediate position of emergency key ② to attach the key to a key ring.

- Press release knob ① again and fully remove emergency key ②.
- **To insert:** press release knob ①.
- Insert emergency key ② to the intermediate position or fully until it engages.

ⓘ Depending on the vehicle's equipment, the intermediate position is not available.

Replacing the key battery

⚠ **DANGER** Serious damage to health caused by swallowing batteries

Batteries contain toxic and corrosive substances. Swallowing batteries may cause serious damage to health.

There is a risk of fatal injury.

- Keep batteries out of the reach of children.
- If batteries are swallowed, seek medical attention immediately.

ENVIRONMENTAL NOTE Environmental damage due to improper disposal of batteries

Batteries contain pollutants. It is illegal to dispose of them with the household rubbish.

-
  Dispose of batteries in an environmentally responsible manner. Take discharged batteries to a qualified specialist workshop or to a collection point for used batteries.

Requirements:
- You require a CR 2032 3 V cell battery.

Mercedes-Benz recommends that you have the battery replaced at a qualified specialist workshop.

▶ Remove the emergency key (→ page 66).

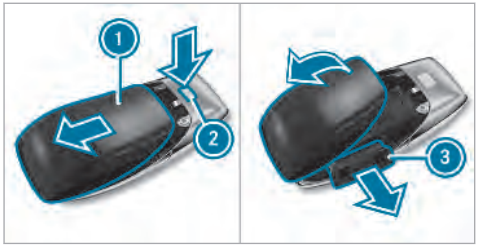

▶ Press release button ② down fully and slide cover ① in the direction of the arrow.

▶ Fold out cover ① in the direction of the arrow and remove.

▶ Remove battery compartment ③ and take out the discharged battery.

▶ Insert the new battery into battery compartment ③. Observe the positive pole marking in the battery compartment and on the battery.

▶ Push in battery compartment ③.

▶ Re-attach cover ① and push it until it engages.

Problems with the key

Problem	Possible causes/consequences and ▶ Solutions
You can no longer lock or unlock the vehicle.	Possible causes: • The key battery is discharged or nearly discharged. • There is interference from a powerful radio signal source.

Problem	Possible causes/consequences and ▶ Solutions
	• The key is faulty. ▶ Check the battery using the battery check lamp and replace if necessary . ▶ Use the emergency key to lock or unlock . ▶ Have the key checked at a qualified specialist workshop.
You have lost a key.	▶ Have the key deactivated at a qualified specialist workshop. ▶ If necessary, have the locks changed as well.

Doors

Notes on the additional door lock

The additional door lock is only available for vehicles for the United Kingdom.

⚠ **WARNING** Risk of injury to persons inside the vehicle when the additional door lock is activated

If the additional door lock is activated, the doors can no longer be opened from the inside.

If there are persons in the vehicle, they can no longer leave the vehicle, e.g. in hazardous situations.

▶ Never leave persons unattended in the vehicle, particularly children, elderly persons or persons in need of help.

▶ If there are persons in the vehicle, do not activate the additional door lock.

The additional door lock is automatically activated:

- After locking the vehicle with the key.
- After locking the vehicle using KEYLESS-GO.

ⓘ After locking the vehicle, the horn can be operated for a short time.

ⓘ After locking the vehicle, pressing the button to centrally unlock the vehicle from inside will trigger an alarm (→ page 69).

If the additional door lock is activated, the doors cannot be opened from the inside.

You can deactivate the additional door lock by deactivating the interior protection (→ page 85).

Unlocking/opening the doors from the inside

▶ **United Kingdom only:** observe the notes on the additional door lock (→ page 68).

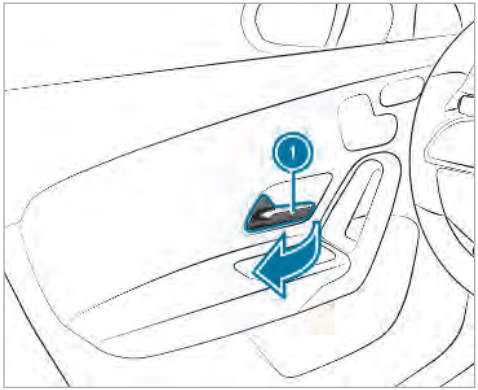

▶ Pull door handle 1.

Centrally locking and unlocking the vehicle from the inside

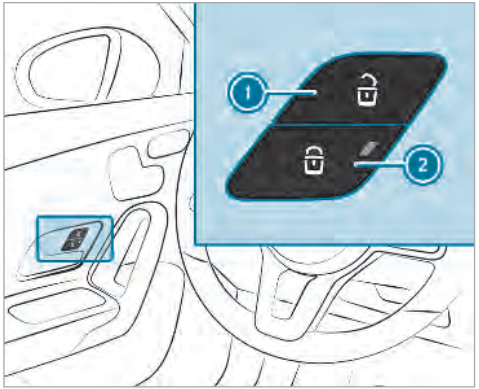

▶ **To unlock:** press button 1.

▶ **To lock:** press button 2.
The indicator lamp lights up.

This does not lock or unlock the fuel filler flap.

The vehicle is not unlocked:

- If you have locked the vehicle using the key.
- If you have locked the vehicle using KEYLESS-GO.

Locking or unlocking the vehicle with a smartphone or a Digital Vehicle Key sticker

Requirements:

- The vehicle is equipped with the "Digital Vehicle Key" function and this service has been activated.
- A Digital Vehicle Key sticker.

Or

- A suitable mobile telephone with NFC aerial.
  - The "Digital Vehicle Key" function is activated via the Mercedes me connect web app: http://www.mercedes.me.
  - **The mobile phone battery must be sufficiently charged.** On some mobile phones, the function is also available when the battery is discharged.

ⓘ You can check the suitability of your mobile phone by entering the phone number at http://www.mercedes.me.
Information about suitable mobile phones can be obtained from your Mercedes-Benz service centre or at http://www.mercedes-benz.com/connect.

ⓘ Mercedes-Benz recommends that you carry the emergency key in case of function restrictions.

ⓘ The function is only available in combination with Mercedes me connect and only in certain countries.

ⓘ Protective cases around the mobile phone can impair the range of functions.

If the vehicle has been parked for longer than two weeks, the NFC aerial in the door handle is deactivated.

▶ Pull the door handle.
The NFC aerial is activated.

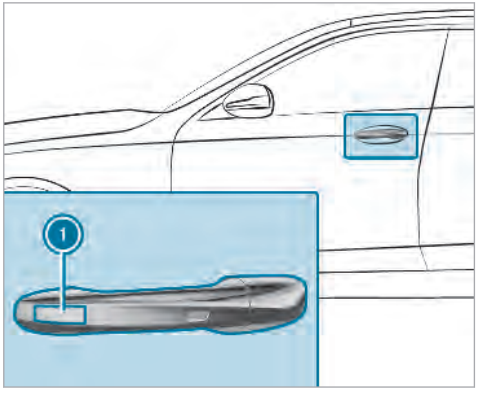

▶ Touch the door handle on the driver's door in the area where NFC aerial ① is located with the part of the mobile phone where the NFC aerial is located or with the Digital Vehicle Key sticker.
The vehicle is locked or unlocked alternately.

If you lose your mobile phone, deactivate the "Digital Vehicle Key" service in Mercedes me connect via http://www.mercedes.me.

Locking/unlocking the vehicle with KEYLESS-GO

Requirements:

- The key is outside the vehicle.
- The distance between the key and the vehicle does not exceed 1 m.
- The driver's door and the door at which the door handle is used are closed.

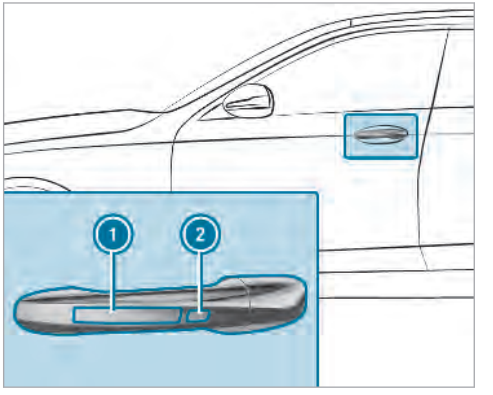

▶ **To unlock the vehicle:** touch the inner surface of the door handle.

▶ **To lock the vehicle:** touch sensor surface ① or ②.

▶ **Convenience closing:** touch recessed sensor surface ② for an extended period.

ⓘ Further information on convenience closing (→ page 77).

If you open the tailgate from outside it is automatically unlocked.

Problems with KEYLESS-GO

Problem	Possible causes/consequences and ▶ Solutions
You can no longer lock or unlock the vehicle using KEYLESS-GO.	Possible causes: • KEYLESS-GO has been deactivated . • The key battery is discharged or nearly discharged. • There is interference from a powerful radio signal source. • The key is faulty. ▶ Activate KEYLESS-GO . ▶ Check the battery using the battery check lamp and replace if necessary . ▶ Use the emergency key to lock or unlock the vehicle . ▶ Have the vehicle and key checked at a qualified specialist workshop.

Activating/deactivating the automatic locking feature

The vehicle is locked automatically when the ignition is switched on and the wheels are turning faster than walking pace.

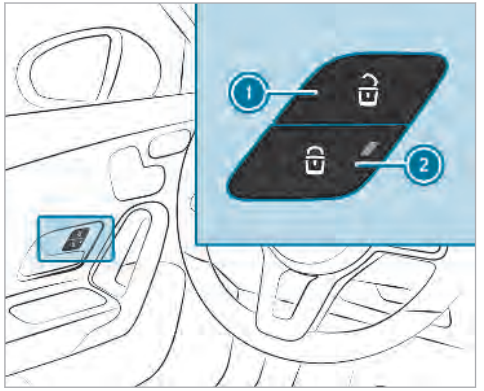

▶ **To activate:** press and hold button ② for approximately five seconds until an acoustic signal sounds.

▶ **To deactivate:** press and hold button ① for approximately five seconds until an acoustic signal sounds.

When the vehicle is locked automatically, the indicator lamp in button ② lights up.

There is a danger of being locked out if the function is activated:

- While the vehicle is being tow started/pushed.
- On a roller dynamometer.

Locking and unlocking the vehicle with the emergency key

Locking/unlocking the driver's door with the emergency key

ⓘ If you wish to lock the vehicle entirely using the emergency key, first press the button for locking from the inside while the driver's door is open. Then proceed to lock the driver's door using the emergency key.

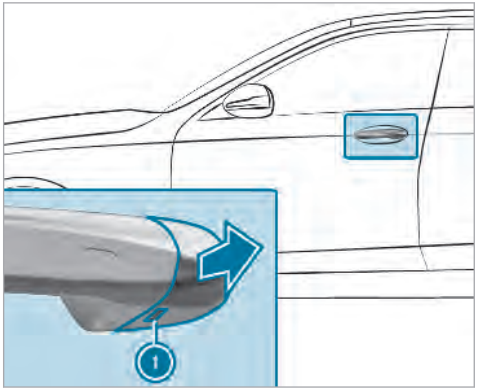

▶ Insert the emergency key as far as it will go into opening ① in the cover.

▶ Pull and hold the door handle.

▶ Pull the cover on the emergency key as straight as possible away from the vehicle until it releases.

▶ Release the door handle.

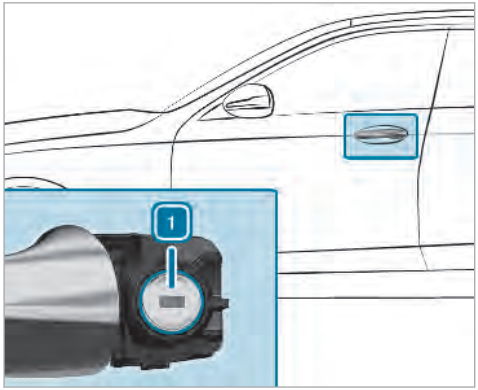

- **To unlock:** turn the emergency key anti-clockwise to position 1.
- **To lock:** turn the emergency key clockwise to position 1.
- Carefully press the cover onto the lock cylinder until it engages and is seated firmly.

Locking the front passenger door and rear doors with the emergency key

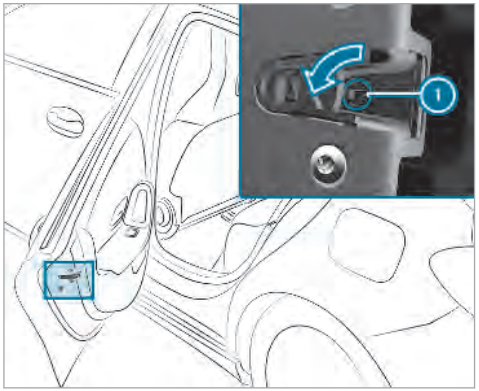

- Insert a suitable object, e.g. the emergency key, into opening 1 on the door lock.
- **To lock the left-hand side of the vehicle:** turn the emergency key anti-clockwise as far as it will go.
- **To lock the right-hand side of the vehicle:** turn the emergency key clockwise as far as it will go.

If the locked door is then closed, it can no longer be opened from outside.

Load compartment

Opening the tailgate

WARNING Risk of exhaust gas poisoning

Combustion engines emit poisonous exhaust gases such as carbon monoxide. Exhaust gases can enter the vehicle interior if the tailgate is open when the engine is running, especially if the vehicle is in motion.

- Always switch off the engine before opening the tailgate.
- Never drive with the tailgate open.

NOTE Damage to the tailgate caused by obstacles above the vehicle

The tailgate swings rearwards and upwards when it is opened.

- Make sure that there is sufficient space behind and above the tailgate.

- Pull the tailgate handle.

Closing the tailgate

WARNING Risk of injury from unsecured items in the vehicle

If objects, luggage or loads are not secured or not secured sufficiently, they could slip, tip over or be thrown around and thereby hit vehicle occupants.

There is a risk of injury, particularly in the event of sudden braking or a sudden change in direction.

- Always stow objects in such a way that they cannot be thrown around.
- Before the journey, secure objects, luggage or loads against slipping or tipping over.

- Pull the tailgate down with the handle and let it drop into the lock.

Unlocking the tailgate with the emergency key

- Fold the rear seat backrest forwards.
- Remove the load compartment cover (→ page 103).

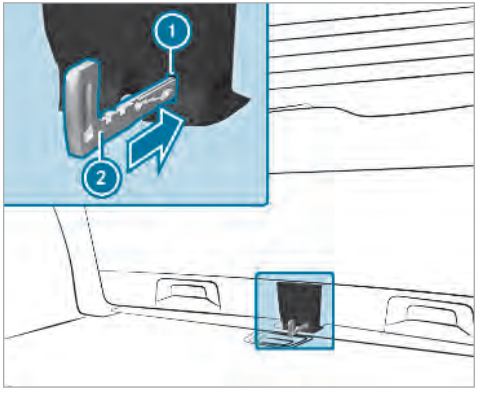

- Insert emergency key ② into opening ① in the trim and push it in.
  The tailgate is unlocked.

Side windows

Opening and closing the side windows

⚠ **WARNING** Risk of becoming trapped when opening a side window

When you open a side window, parts of the body could be drawn in or become trapped between the side window and window frame.

- When opening, make sure that nobody is touching the side window.
- If someone is trapped, release the button immediately or pull it in order to close the side window again.

⚠ **WARNING** Risk of becoming trapped when closing a side window

When closing a side window, body parts could be trapped in the closing area in the process.

- When closing, make sure that no body parts are in the closing area.
- If someone is trapped, release the button immediately or press the button in order to reopen the side window.

⚠ **WARNING** Risk of becoming trapped when children operate the side windows

Children could become trapped if they operate the side windows, particularly when unattended.

- Activate the override feature for the rear side windows.
- When leaving the vehicle, always take the key with you and lock the vehicle.
- Never leave children unattended in the vehicle.

Requirements:

- The power supply or the ignition is switched on.

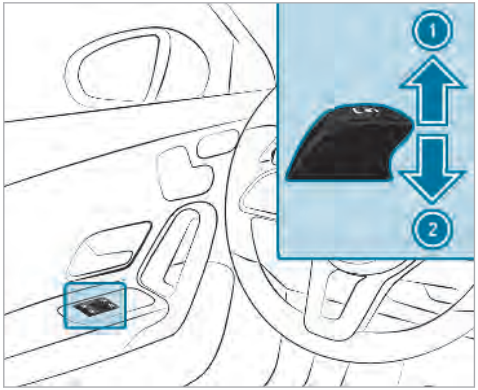

1 Closing
2 Opening

The buttons on the driver's door take precedence.

- **To start automatic operation:** press the [⊟] button beyond the point of resistance or pull and release it.

▶ **To interrupt automatic operation:** press or pull the [ ] button again.

When the vehicle is switched off, the side windows can continue being operated.

The function is available for around five minutes or until a front door is opened.

Automatic reverse function of the side windows

If an object blocks a side window during the closing process, the side window opens again automatically. The automatic reverse function is only an aid and is not a substitute for your attentiveness.

▶ When closing, make sure that no body parts are in the closing area.

⚠ **WARNING** Risk of becoming trapped despite there being reversing protection on the side window

The reverse function does not react:

- to soft, light and thin objects, e.g. small fingers
- during resetting

This means that the reverse function cannot prevent someone from becoming trapped in these situations.

▶ When closing, make sure that no body parts are in the closing area.

▶ If someone becomes trapped, press the [ ] button to open the side window again.

Convenience opening (ventilating the vehicle before starting a journey)

⚠ **WARNING** Risk of entrapment when opening a side window

When opening a side window, parts of the body could be drawn in or become trapped between the side window and window frame.

▶ When opening, make sure that nobody is touching the side window.

▶ Release the button immediately if somebody becomes trapped.

▶ Press and hold the [ ] button on the key.

The following functions are performed:

- The vehicle is unlocked.
- The side windows are opened.
- The panoramic sliding sunroof is opened.
- The seat ventilation of the driver's seat is switched on.

If the roller sunblinds of the panoramic sliding sunroof are closed, the roller sunblinds are opened first.

▶ **To continue convenience opening:** press the [ ] button again.

▶ **To interrupt convenience opening:** release the [ ] button.

Convenience closing (closing the vehicle from outside)

⚠ **WARNING** Risk of entrapment caused by inadvertent convenience closing

When the convenience closing feature is operating, parts of the body could become trapped in the closing area of the side window and the sliding sunroof.

▶ Observe the complete closing procedure when using convenience closing.

▶ When closing, make sure that no body parts are in the closing area.

▶ Press and hold the 🔒 button on the key.

The following functions are performed:

- The vehicle is locked.
- The side windows are closed.
- The panoramic sliding sunroof is closed.

▶ **To close the roller sunblinds:** press the 🔒 button again.

▶ **To interrupt convenience closing:** release the 🔒 button.

ⓘ Convenience closing can also be operated with KEYLESS-GO (→ page 70).

Problems with the side windows

Problem	Possible causes/consequences and ▶ Solutions
A side window cannot be closed and you cannot see the cause.	▶ Check to see if any objects are in the window guide. ⚠ **WARNING** Risk of becoming trapped or fatally injured if reversing protection is not activated If you close a side window again immediately after it has been blocked or reset, the side window closes with increased or maximum force. The reversing feature is then not active. Parts of the body could become trapped in the closing area in the process. ▶ Make sure that no parts of the body are in the closing area. ▶ To stop the closing process, release the button or press the button again to reopen the side window.

Problem	Possible causes/consequences and ▶ Solutions
	If a side window is obstructed during closing and reopens again slightly: ▶ Immediately after the window blocks, pull the corresponding button again until the side window has closed, and hold the button for an additional second. The side window is closed with increased force. If a side window is obstructed again during closing and reopens again slightly: ▶ Repeat the previous step. The side window is closed without the automatic reversing function.
The side windows cannot be opened or closed using the convenience opening feature.	The key battery is discharged or nearly discharged. ▶ Check the battery using the battery check lamp and replace if necessary .

Sliding sunroof

Opening and closing the sliding sunroof

ⓘ The term "sliding sunroof" also refers to the panoramic sliding sunroof.

⚠ **WARNING** Risk of becoming trapped while opening and closing the sliding sunroof

During opening and closing, parts of the body could get caught in the sweep of the sliding sunroof.

▶ When opening or closing, make sure that no body parts are in the sweep.

▶ Release the button immediately if somebody becomes trapped.

or

▶ Press the button in any direction during the automatic opening/closing process. The opening/closing process is stopped.

WARNING Risk of entrapment if the sliding sunroof is operated by children

Children operating the sliding sunroof could get caught in the moving parts, particularly if unattended.

- Never leave children unattended in the vehicle.
- When leaving the vehicle, always take the key with you and lock the vehicle.

WARNING Risk of entrapment while opening and closing the roller sunblinds

When opening or closing, make sure that no body parts become trapped between the roller sunblind and frame or sliding sunroof.

- When opening or closing, make sure that no body parts are in the sweep of the roller sunblind.
- Release the switch immediately if somebody becomes trapped.

or

- Press the switch in any direction during the automatic opening/closing process. The opening/closing process is stopped.

NOTE Malfunction caused by snow and ice

Snow and ice may lead to a malfunction of the sliding sunroof.

- Only open the sliding sunroof if it is free of snow and ice.

NOTE Damage caused by protruding objects

Objects that protrude from the sliding sunroof may damage the sealing strips.

- Do not allow anything to protrude from the sliding sunroof.

NOTE Important points to remember when a roof rack is fitted

When a roof rack is fitted, raising or opening the sliding sunroof may be limited.

- Check whether the sliding sunroof can be raised or opened when a roof rack is fitted.
- If in doubt, do not raise or open the sliding sunroof.

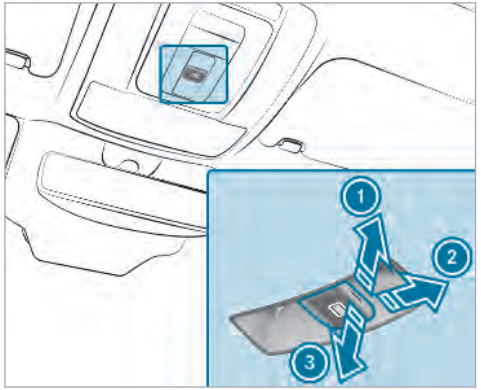

1. To raise
2. To open
3. To close/lower

Use the button to operate the panoramic sliding sunroof and the roller sunblind.

- The panoramic sliding sunroof can be opened only when the roller sunblind is open.
- The roller sunblind can be operated only when the panoramic sliding sunroof is closed.

▶ **To start automatic operation:** press the button beyond the point of resistance or pull and release it.

▶ **To interrupt automatic operation:** briefly press the button in any direction. The opening/closing process is stopped.

- Check whether the panoramic sliding sunroof can be raised or opened when a roof rack is fitted.

Automatic reversing function of the sliding sunroof

If there is an object obstructing the sliding sunroof during the closing process, the sliding sunroof opens again automatically. The automatic reverse function is only an aid and is not a substitute for your attentiveness.

▶ When closing, make sure that no body parts are in the closing area.

⚠ **WARNING** Risk of entrapment even with the reversing feature active

The reverse function does not react in particular:

- to soft, light and thin objects, e.g. small fingers
- over the last 4 mm of the closing path
- during resetting

This means that the reverse function cannot prevent someone from becoming trapped in these situations.

▶ When closing, make sure that no body parts are in the closing area.

▶ Release the button immediately if somebody becomes trapped.

or

▶ Briefly press the button in any direction during automatic operation. The closing process is stopped.

Automatic reversing function of the roller sunblind

If there is an object obstructing the roller sunblind during the closing process, the roller sunblind opens again automatically. The automatic reverse function is only an aid and is not a substitute for your attentiveness.

▶ When closing the roller sunblind, make sure that no body parts are in the range of movement.

⚠ **WARNING** Risk of becoming trapped despite reversing function

In particular, the reversing function does not react to soft, light and thin objects, e.g. small fingers.

This means that the reversing function cannot prevent entrapment in these situations.

▶ When closing the roller sunblind, make sure that no body parts are in the range of movement.
▶ Release the button immediately if somebody becomes trapped.

or

▶ Press the button in any direction during the automatic closing process.
The closing process is stopped.

Automatic features of the sliding sunroof

ⓘ The term "sliding sunroof" also refers to the panoramic sliding sunroof.

By pushing or pulling the button, you can interrupt the automatic functions: "Rain closing function when driving" and "Automatic lowering feature".

Automatic closing when the vehicle is stationary

- if it starts to rain (detection by the rain sensor on the windscreen)
- after six hours
- if there is a malfunction in the power supply

The rear of the sliding sunroof is then raised.

Rain closing function when driving

Vehicles with a panoramic sliding sunroof: If it starts to rain, the raised sliding sunroof is automatically lowered while the vehicle is in motion.

Automatic lowering feature

Vehicles with a panoramic sliding sunroof: If the sliding sunroof is raised at the rear, the sliding sunroof is automatically lowered slightly at higher speeds. At low speeds, it is raised again automatically.

⚠ **WARNING** Risk of entrapment by automatic lowering of the sliding sunroof

At high speeds the raised sliding sunroof automatically lowers slightly at the rear.

This could trap you or other persons.

▶ Make sure that nobody reaches into the sweep of the sliding sunroof whilst the vehicle is in motion.

▶ If somebody becomes trapped, briefly push the sliding sunroof button forwards or backwards.
The sliding sunroof lifts during opening.

Problems with the sliding sunroof

ⓘ The term "sliding sunroof" also refers to the panoramic sliding sunroof.

Problem	Possible causes/consequences and ▶ Solutions
The sliding sunroof cannot be closed and you cannot see the cause.	⚠ **WARNING** Risk of becoming trapped or fatal injury by closing the sliding sunroof again If you close the sliding sunroof again immediately after it has been blocked or reset, the sliding sunroof closes with increased force. Parts of the body could become trapped in the closing area in the process. ▶ Make sure that no parts of the body are in the closing area. ▶ Release the button immediately if somebody becomes trapped. or ▶ Press the button in any direction during the automatic closing process. The closing process is stopped. If the sliding sunroof is obstructed during closing and reopens again slightly: ▶ Immediately after automatic reversing, pull and hold the button down again to the point of resistance until the sliding sunroof is closed. The sliding sunroof is closed with increased force.

Problem	Possible causes/consequences and ▶ Solutions
	If the sliding sunroof is obstructed again and reopens again slightly: ▶ Repeat the previous step. The sliding sunroof is closed again with increased force.
Vehicles with a panoramic sliding sunroof: The sliding sunroof or the roller sunblind does not operate smoothly.	▶ Pull and hold the button [≡] little by little until the sliding sunroof is fully closed. ▶ Pull and hold the button [≡] little by little until the roller sunblind is fully closed. ▶ Use automatic operation to fully open and then close the sliding sunroof.

Anti-theft protection

Function of the immobiliser

The immobiliser prevents your vehicle from being started without the correct key.

The immobiliser is automatically activated when the ignition is switched off and deactivated when the ignition is switched on.

ATA (Anti-Theft Alarm system)

Function of the ATA system

If the ATA system is primed, a visual and audible alarm is triggered in the following situations:

- When a door is opened
- When the tailgate is opened
- When the bonnet is opened
- When the interior protection is triggered (→ page 85)
- When tow-away protection is triggered (→ page 84)

The ATA system is primed automatically after approximately 10 seconds:

- After locking the vehicle with the key
- After locking the vehicle using KEYLESS-GO

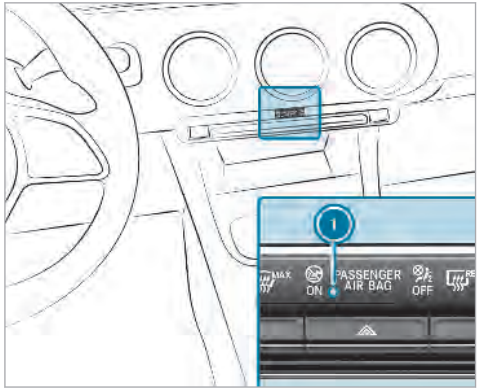

Indicator lamp ① flashes when the ATA system is activated.

The ATA system is automatically deactivated:

- After unlocking the vehicle with the key
- After pressing the start/stop button with the key in the stowage compartment (→ page 143)
- After unlocking the vehicle using KEYLESS-GO

ⓘ When the Mercedes-Benz emergency call system is active and the alarm stays on for more than 30 seconds, a message is automatically sent to the Customer Assistance Centre (→ page 350).

Deactivating the ATA

▶ Press the [🔓] or [🔒] button on the key.

or

▶ Press the start/stop button with the key in the stowage compartment (→ page 143)

Deactivating the alarm using KEYLESS-GO:

▶ Grasp the outside door handle with the key outside the vehicle.

Function of tow-away protection

An audible and visual alarm is triggered if your vehicle's angle of inclination is altered while tow-away protection is primed.

Tow-away protection is automatically primed after about 60 seconds:

- After locking the vehicle with the key
- After locking the vehicle using KEYLESS-GO

Tow-away protection is only primed when the following components are closed:

- The doors
- The tailgate

Tow-away protection is automatically deactivated:

- After pressing the [🔓] button on the key
- After pressing the start/stop button with the key in the stowage compartment (→ page 143)
- After unlocking the vehicle using KEYLESS-GO

Priming/deactivating tow-away protection

Multimedia system:

→ [⌂] ▸▸ Settings ▸▸ Schnellzugriff (Quick access)

▶ Prime/deactivate Tow-away protection.

Tow-away protection remains deactivated until:

- The vehicle is unlocked again.
- A door is opened.
- The vehicle is locked again.

Function of interior protection

When interior protection is primed, a visual and audible alarm is triggered if movement is detected in the vehicle interior.

Interior protection is primed automatically after approximately 10 seconds:

- After locking the vehicle with the key
- After locking the vehicle using KEYLESS-GO

Interior protection is only primed when the following components are closed:

- Doors
- The tailgate

Interior protection is automatically deactivated:

- After pressing the button on the key
- After pressing the start/stop button with the key in the stowage compartment (→ page 143)
- After unlocking the vehicle using KEYLESS-GO

The following situations can lead to a false alarm:

- Moving objects such as mascots in the vehicle interior
- The side window is open
- The panoramic sliding sunroof is open

Priming/deactivating interior protection

Multimedia system:

→ ⌂ ▸▸ Settings ▸▸ Schnellzugriff (Quick access)

▶ Prime/deactivate Interior motion sensor.

Interior protection remains deactivated until:

- The vehicle is unlocked again.
- A door is opened.
- The vehicle is locked again.

Notes on the correct driver's seat position

⚠ **WARNING** Risk of injury through adjusting vehicle settings while the vehicle is in motion

You could lose control of the vehicle in the following situations:

- if you adjust the driver's seat, the head restraints, the steering wheel or the mirror while the vehicle is in motion
- if you fasten your seat belt while the vehicle is in motion

▶ Before starting the engine: adjust the driver's seat, the head restraints, the steering wheel or the mirror and fasten your seat belt.

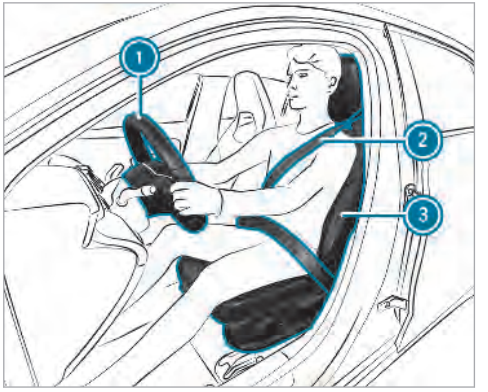

Ensure the following when adjusting the steering wheel ①, seat belt ② and driver's seat ③:

- you are as far away from the driver's airbag as possible
- you are sitting in a normal upright position
- your thighs are slightly supported by the seat cushion
- your legs are not entirely stretched and you can depress the pedals properly
- the back of your head is supported at eye level by the centre of the head restraint
- you can hold the steering wheel with your arms slightly bent
- you can move your legs freely
- you can see all the displays on the instrument cluster clearly
- you have a good overview of the traffic conditions
- the seat belt is pulled snugly against the body and is routed across the centre of your shoulder and across your hips in the pelvic area

Seats

Adjusting the front seat mechanically (without Seat Comfort Package)

⚠ **WARNING** Risk of becoming trapped if the seats are adjusted by children

Children could become trapped if they adjust the seats, particularly when unattended.

▶ When leaving the vehicle, always take the key with you and lock the vehicle. This also applies to the Digital Car Key sticker and mobile phones if the "Digital Car Key on smartphone" function is activated via the Mercedes me connect web app.

▶ Never leave children unattended in the vehicle.

⚠ **WARNING** Risk of becoming trapped when adjusting the seats

When you adjust a seat, you or other vehicle occupants could become trapped, e.g. on the seat guide rail.

▶ Make sure when adjusting a seat that no one has any body parts in the sweep of the seat.

Observe the safety notes on "Airbags" and "Children in the vehicle".

⚠ **WARNING** Risk of accident due to the driver's seat not being engaged

If the driver's seat is not engaged, it could move unexpectedly while the vehicle is in motion.

This could cause you to lose control of the vehicle.

▶ Always make sure that the driver's seat is engaged before starting the vehicle.

⚠ **WARNING** Risk of injury through adjusting vehicle settings while the vehicle is in motion

You could lose control of the vehicle in the following situations:

- if you adjust the driver's seat, the head restraints, the steering wheel or the mirror while the vehicle is in motion
- if you fasten your seat belt while the vehicle is in motion

▶ Before starting the engine: adjust the driver's seat, the head restraints, the steering wheel or the mirror and fasten your seat belt.

⚠ **WARNING** Risk of becoming trapped if the seat height is adjusted carelessly

If you adjust the seat height carelessly, you or other vehicle occupants could be trapped and thereby injured.

Children in particular could accidentally press the electrical seat adjustment buttons and become trapped.

- While moving the seats, make sure that hands or other body parts do not get under the lever assembly of the seat adjustment system.

WARNING Risk of injury due to head restraints which are not fitted or are adjusted incorrectly

If head restraints are not fitted or are adjusted incorrectly, they cannot provide protection as intended.

There is an increased risk of injury in the head and neck area, e.g. in the event of an accident or when braking.

- Always drive with the head restraints fitted.
- Before driving off, make sure for every vehicle occupant that the centre of the head restraint supports the back of the head at about eye level.

Do not interchange the head restraints of the front and rear seats. Otherwise, you cannot adjust the height and angle of the head restraints correctly.

Adjust the head restraint fore-and-aft position so that it is as close as possible to the back of your head.

WARNING Risk of injury or death due to incorrect seat position

The seat belt does not offer the intended level of protection if you have not moved the seat backrest to an almost vertical position.

When braking or in the event of an accident, you could slide underneath the seat belt and sustain abdominal or neck injuries, for example.

- Adjust the seat properly before beginning your journey.
- Always ensure that the seat backrest is in an almost vertical position and that the shoulder section of your seat belt is routed across the centre of your shoulder.

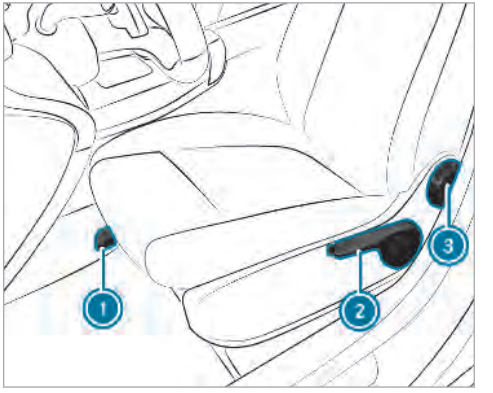

1. Seat fore-and-aft position
2. Seat height
3. Seat backrest inclination

- **To adjust the seat fore-and-aft position:** lift lever 1 and slide the seat into the desired position.
- Make sure that the seat is engaged.

- **To adjust the seat height:** turn or push lever ② until the desired position has been reached.
- **To adjust the seat backrest inclination:** turn handwheel ③ forwards and backwards until the desired position has been reached.

Adjusting the front seat mechanically (with Seat Comfort Package)

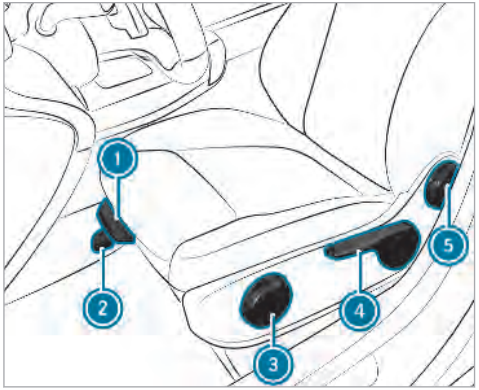

① Seat cushion length
② Seat fore-and-aft position
③ Seat cushion inclination
④ Seat height
⑤ Seat backrest inclination

- **To adjust the seat cushion length:** lift lever ① and slide the front section of the seat cushion forwards or backwards.
- **To adjust the seat fore-and-aft position:** lift lever ② and slide the seat into the desired position.
- Make sure that the seat is engaged.
- **To adjust the seat cushion inclination:** turn handwheel ③ forwards and backwards until the desired position has been reached.
- **To adjust the seat height:** turn or push lever ④ until the desired position has been reached.
- **To adjust the seat backrest inclination:** turn handwheel ⑤ forwards and backwards until the desired position has been reached.

Adjusting the front seat electrically

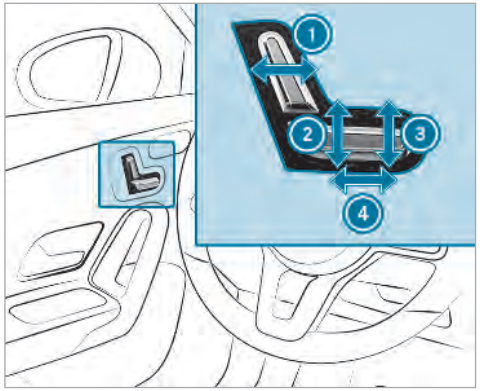

1. Seat backrest inclination
2. Seat height
3. Seat cushion inclination
4. Seat fore-and-aft position

▶ Save the settings with the memory function (→ page 97).

Adjusting the 4-way lumbar support

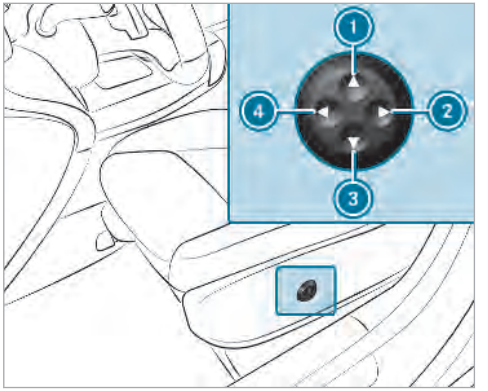

1. To raise
2. To soften
3. To lower
4. To harden

▶ Using buttons 1 to 4, adjust the contour of the backrest individually to suit your back.

Head restraints

Adjusting the front seat head restraints mechanically

WARNING Risk of injury through adjusting vehicle settings while the vehicle is in motion

You could lose control of the vehicle in the following situations:

- if you adjust the driver's seat, the head restraints, the steering wheel or the mirror while the vehicle is in motion
- if you fasten your seat belt while the vehicle is in motion

▶ Before starting the engine: adjust the driver's seat, the head restraints, the steering wheel or the mirror and fasten your seat belt.

WARNING Risk of injury due to head restraints which are not fitted or are adjusted incorrectly

If head restraints are not fitted or are adjusted incorrectly, they cannot provide protection as intended.

There is an increased risk of injury in the head and neck area, e.g. in the event of an accident or when braking.

- Always drive with the head restraints fitted.
- Before driving off, make sure for every vehicle occupant that the centre of the head restraint supports the back of the head at about eye level.

Do not interchange the head restraints of the front and rear seats. Otherwise, you cannot adjust the height and angle of the head restraints correctly.

Adjust the head restraint fore-and-aft position so that it is as close as possible to the back of your head.

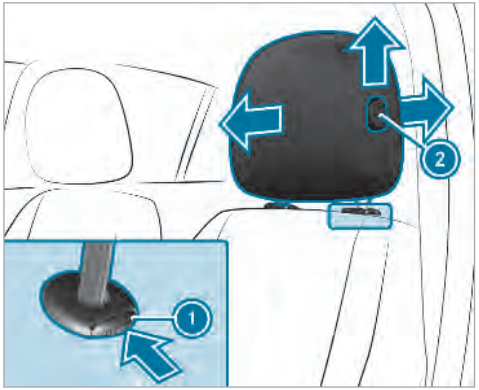

- **To raise:** press release knob 1 and pull the head restraint up.
- **To lower:** press release knob 1 in the direction of the arrow and push the head restraint down.
- **To move forwards:** press release knob 2 and pull the head restraint forwards.
- **To move backwards:** press release knob 2 and push the head restraint backwards.

Adjusting the head restraints of the rear seats mechanically

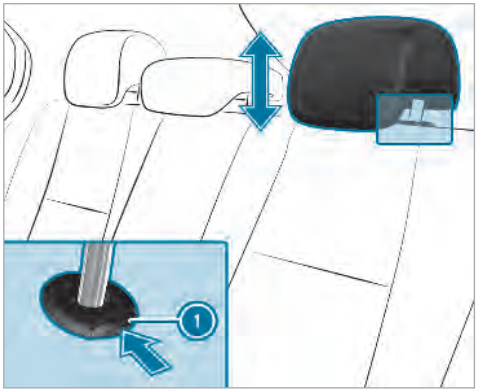

- **To raise:** pull the head restraint up.
- **To lower:** press release knob 1 in the direction of the arrow and push the head restraint down.

Fitting/removing the rear seat head restraints

Removing

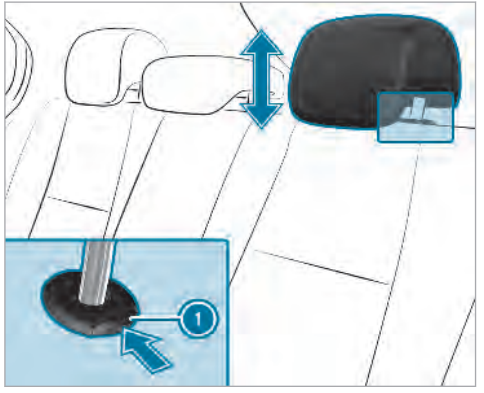

- Release the rear seat backrest and fold it slightly forwards (→ page 101).
- Pull the head restraint upwards as far as it will go.
- Push release knob 1 in the direction of the arrow and pull out the head restraint.

Fitting

- Insert the head restraint such that the notches on the bar are on the left when viewed in the direction of travel.
- Push the head restraint down until you hear it engage in position.
- Fold the rear seat backrest back until it engages.

Configuring the seat settings

Multimedia system:

→ ⌂ ▸▸ Comfort ▸▸ Seat comfort

- Select a seat.

Adjusting the backrest side bolsters

- Select Side bolsters.
- Adjust the air cushions.

Adjusting the seat contour in the lumbar region of the seat backrest (lumbar)

- Select Lumbar.
- Adjust the air cushions.

Selecting the massage program for the front seats

Multimedia system:

→ ⌂ ▸▸ Comfort ▸▸ Massage

- Select a seat.
- Select Wave Massage or Pulsating Massage. The selected program starts.
- **To set the massage intensity: switch** High intensity on or off .

Resetting the seat and massage settings

Multimedia system:

→ ⌂ ▸▸ Comfort ▸▸ Seat comfort ▸▸ Reset

- Select Yes or No.

ⓘ Only the settings for the selected seat are reset.

Setting ENERGIZING seat kinetics

Requirements:

- These functions are available only for fully electrical seats with a memory function.

Multimedia system:

→ [⌂] ▸▸ Comfort ▸▸ Seat comfort ▸▸ Seat kinetics

ENERGIZING seat kinetics supports back health by changing the seat position during driving. The muscles and joints are stressed and relieved again and again by means of minor movements of the cushion and backrest.

Depending on the planned driving time, three different programs are available for selection.

The following programs are available:

- Short journey (16 minutes)
- Medium-dist. journey (32 minutes)
- Long-distance journey (96 minutes)

▶ Select a program.
The selected program starts.

Configuring a program

▶ Select Settings.

▶ Select Backr. & seat surface, Backrest or Seat surface.

▶ **Vehicles with a multicontour seat: switch** Including lumbar on or off.

Switching the seat heater on/off

⚠ **WARNING** Risk of burns due to repeatedly switching on the seat heater

Repeatedly switching on the seat heater can cause the seat cushion and seat backrest padding to become very hot.

The health of persons with limited temperature sensitivity or a limited ability to react to excessively high temperatures may be affected or they may even suffer burn-like injuries.

▶ Do not repeatedly switch on the seat heater.

! **NOTE** Damage to the seats caused by objects or documents when the seat heater is switched on

When the seat heater is switched on, overheating can occur due to objects or documents placed on the seats e.g. seat cushions or child seats. This could cause damage to the seat surface.

▶ Make sure that no objects or documents are on the seats when the seat heater is switched on.

Requirements:

- The power supply is switched on.

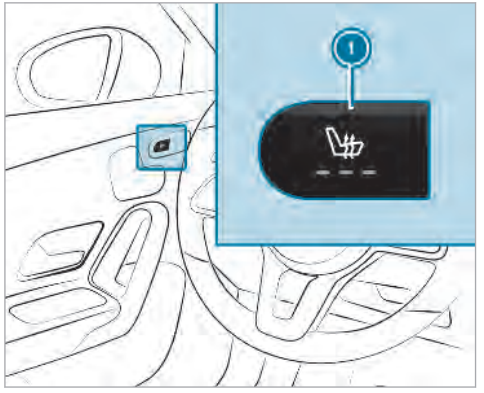

- **To switch on:** press button ①.
  All indicator lamps are on.
- **To reduce the level:** press button ① repeatedly until the desired heating level is set.
  Depending on the heating level, up to three indicator lamps light up.
- **To switch off:** press button ① repeatedly until all the indicator lamps go out.

ⓘ The seat heater automatically switches down from the three heating levels after 8, 10 and 20 minutes until the seat heater is switched off.

Switching the seat ventilation on/off

Requirements:
- The power supply is switched on.

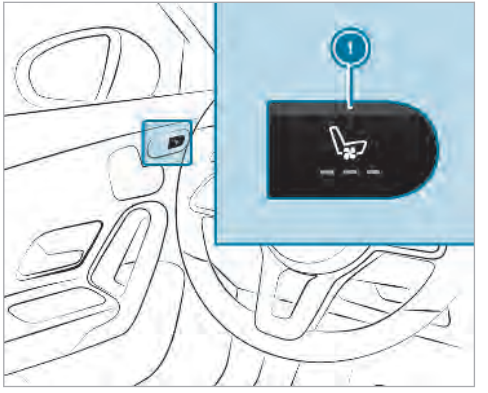

- **To switch on:** press button ①.
  All indicator lamps are on.
- **To reduce the level:** press button ① repeatedly until the desired ventilation level is set.
  Depending on the ventilation level, up to three indicator lamps light up.
- **To switch off:** press button ① repeatedly until all the indicator lamps go out.

Steering wheel

Adjusting the steering wheel manually

⚠ **WARNING** Risk of injury through adjusting vehicle settings while the vehicle is in motion

You could lose control of the vehicle in the following situations:
- if you adjust the driver's seat, the head restraints, the steering wheel or the mirror while the vehicle is in motion

- if you fasten your seat belt while the vehicle is in motion

▶ Before starting the engine: adjust the driver's seat, the head restraints, the steering wheel or the mirror and fasten your seat belt.

⚠ **WARNING** Risk of entrapment for children when adjusting the steering wheel

Children could injure themselves if they adjust the steering wheel.

▶ Never leave children unattended in the vehicle.

▶ When leaving the vehicle, always take the key with you and lock the vehicle. This also applies to the Digital Vehicle Key sticker and mobile phones if the "Digital Vehicle Key in the smartphone" function is activated via the Mercedes me connect web app.

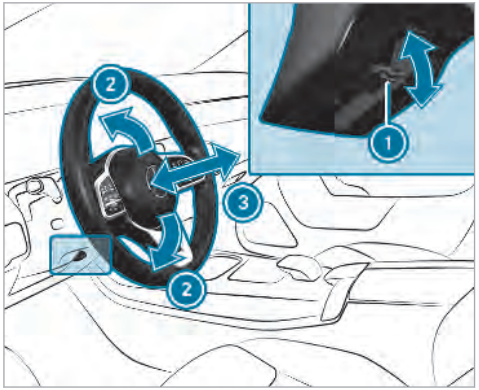

▶ Push release lever ① down as far as it will go.
The steering column is unlocked.

▶ Adjust height ② and distance ③ to the steering wheel.

▶ Push release lever ① up as far as it will go.
The steering column is locked.

▶ Check and make sure that the steering column is locked by moving the steering wheel.

Switching the steering wheel heater on/off

- The ignition is switched on.

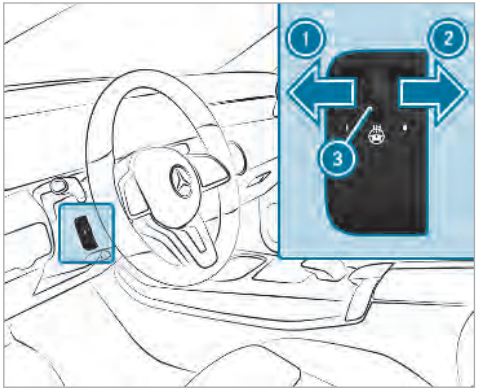

▶ **To switch on:** push the switch to position ①.
The indicator lamp ③ lights up.

▶ **To switch off:** push the switch to position ②.
The indicator lamp ③ goes out.

When you switch the ignition off, the steering wheel heater switches off.

Easy entry and exit feature

Function of the easy entry and exit feature

⚠ **WARNING** Risk of accident when pulling away during the adjustment process of the easy exit feature

- If you pull away while the easy entry and exit feature is making adjustments, you could lose control of the vehicle.

▶ Always wait until the adjustment process is complete before pulling away.

⚠ **WARNING** Risk of becoming trapped while adjusting the easy entry and exit feature

When the easy entry and exit feature adjusts the driver's seat, you and other vehicle occupants – particularly children – could become trapped.

▶ During the adjustment process of the easy entry and exit feature, make sure that no one has any body parts in the sweep of the driver's seat.

If there is a risk of becoming trapped by the driver's seat:

▶ Press the seat adjustment switch. The adjustment process is stopped.

▶ Never leave children unattended in the vehicle.

▶ When leaving the vehicle, always take the key with you and lock the vehicle. This also applies to the Digital Car Key sticker and mobile phones if the "Digital Car Key on smartphone" function is activated via the Mercedes me connect web app.

You can stop the adjustment process by pressing one of the memory position switches of the memory function.

⚠ **WARNING** Risk of becoming trapped during activation of the easy entry and exit feature by children

If children activate the easy entry and exit feature, they can become trapped, particularly when unattended.

▶ Never leave children unattended in the vehicle.

▶ When leaving the vehicle, always take the key with you and lock the vehicle.

When the easy entry and exit feature is active, the driver's seat moves backwards when:

- you switch the ignition off when the driver's door is open
- you open the driver's door when the ignition is switched off

ⓘ The driver's seat moves backwards only if it is not already in the rearmost position.

The driver's seat moves back to the last drive position in the following cases:

- you switch the ignition on when the driver's door is closed
- you close the driver's door when the ignition is switched on

The last drive position is stored in the following situations:

- you switch the ignition off
- you call up the seat settings via the memory function
- you save the seat setting using the memory function

Setting the easy entry and exit feature
Multimedia system:
→ [⌂] ▸▸ Settings ▸▸ Fahrzeug (Vehicle) ▸▸ Easy Entry/Exit

▶ Activate or deactivate the function.

Using the memory function

⚠ **WARNING** Risk of an accident if memory function is used while driving

If you use the memory function on the driver's side while driving, you could lose control of the vehicle as a result of the adjustments being made.

▶ Only use the memory function on the driver's side when the vehicle is stationary.

⚠ **WARNING** Risk of entrapment when setting the seat with the memory function

When the memory function adjusts the seat, you and other vehicle occupants – particularly children – could become trapped.

▶ During the adjustment process of the memory function, make sure that no one has any body parts in the sweep of the seat.

▶ If someone becomes trapped, immediately press the position button or seat adjustment switch.

⚠ **WARNING** Risk of entrapment if the memory function is activated by children

Children could become trapped if they activate the memory function, particularly when unattended.

▶ Never leave children unattended in the vehicle.

▶ When leaving the vehicle, always take the key with you and lock the vehicle. This also applies to the Digital Car Key sticker and mobile phones if the "Digital Car Key in the smartphone" function is activated via the Mercedes me connect web app.

The memory function can be used when the ignition is switched off.
Seat adjustments for up to three people can be stored and called up using the memory function.

The following systems can be selected:

- Seat
- Seat contour
- Outside mirrors
- Head-up display

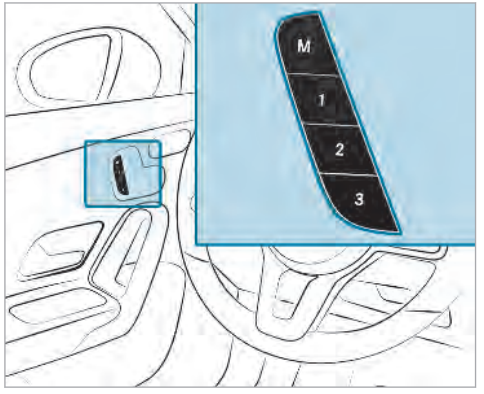

▶ **To store:** set the seat, seat contour, the head-up display and the outside mirror to the desired position.

▶ Press memory button M and then press preset position button 1, 2 or 3 within three seconds.

▶ **To call up:** press and briefly hold preset position button 1, 2 or 3.
After releasing the button, the front seat, head-up display, outside mirror and seat contour are moved into the stored position automatically.

Stowage areas

Notes on loading the vehicle

⚠ **WARNING** Risk of exhaust gas poisoning

Combustion engines emit poisonous exhaust gases such as carbon monoxide. Exhaust gases can enter the vehicle interior if the boot lid is open when the engine is running, especially if the vehicle is in motion.

▶ Always switch off the engine before opening the boot lid.

▶ Never drive with the boot lid open.

⚠ **WARNING** Risk of injury from unsecured items in the vehicle

If objects, luggage or loads are not secured or not secured sufficiently, they could slip, tip over or be thrown around and thereby hit vehicle occupants.

There is a risk of injury, particularly in the event of sudden braking or a sudden change in direction.

▶ Always stow objects in such a way that they cannot be thrown around.

▶ Before the journey, secure objects, luggage or loads against slipping or tipping over.

WARNING Risk of injury from incorrectly stowed objects

If objects in the passenger compartment are stowed incorrectly, they can slide or be thrown around and hit vehicle occupants. In addition, cup holders, open stowage spaces and mobile phone brackets cannot always retain all objects they contain.

There is a risk of injury, particularly in the event of sudden braking or a sudden change in direction.

- Always stow objects so that they cannot be thrown around in such situations.
- Always make sure that objects do not protrude from stowage spaces, luggage nets or stowage nets.
- Close the lockable stowage spaces before starting a journey.
- Always stow and secure heavy, hard, pointed, sharp-edged, fragile or bulky objects in the boot.

WARNING Risk of burns from tailpipes and tailpipe trim

The tailpipe and tailpipe trim can become very hot. If you come into contact with these parts of the vehicle, you could burn yourself.

- Always be particularly careful around the tailpipe and the tailpipe trim.
- Allow the vehicle parts to cool down before you touch them.

The handling characteristics of your vehicle are dependent on the distribution of the load within the vehicle. You should bear the following in mind when loading the vehicle:

- never exceed the maximum gross vehicle weight or the permissible axle loads for the vehicle (including occupants).
- the load must not protrude above the upper edge of the seat backrests.
- always place the load behind unoccupied seats if possible.
- secure the load using the tie-down eyes and distribute the load evenly.

Stowage spaces in the vehicle interior

Overview of the front stowage compartments

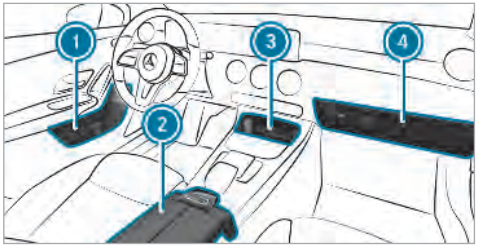

1. Stowage compartment in the doors
2. Stowage compartment in the armrest with a multimedia and USB connection
3. Stowage compartment in the front centre console with a USB connection and charging module for wireless charging of mobile phones
4. Glove box

Locking or unlocking the glove box

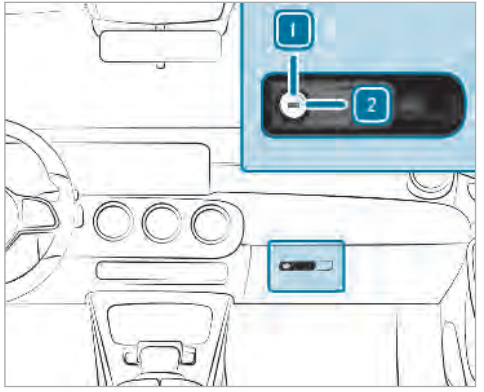

▶ Turn the emergency key a quarter turn clockwise [2] (to lock) or anti-clockwise [1] (to unlock).

Stowage compartment for customer literature

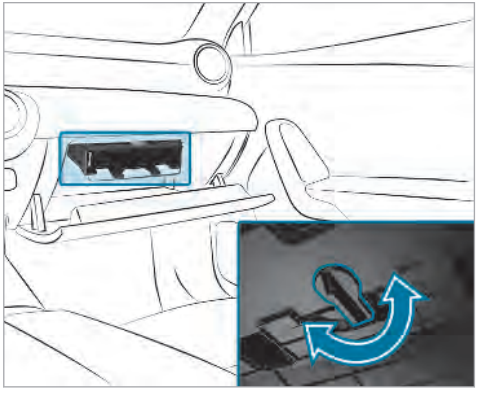

▶ **To open:** turn the handle to the left or right.

Opening the spectacles compartment

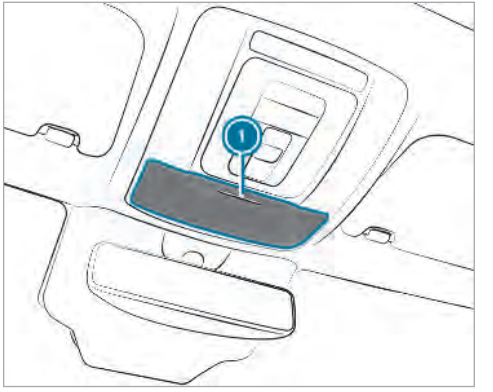

▶ Press button ①.

Through-loading feature in the rear bench seat

Folding the rear seat backrest forwards

⚠ **WARNING** Risk of injury if the rear bench seat/rear seat and seat backrest are not engaged

If the rear bench seat/rear seat and seat backrest are not engaged they could fold forwards, e.g. when braking suddenly or in the event of an accident.

- If this is the case, the vehicle occupant would be forced into the seat belt by the rear bench seat/rear seat or by the seat backrest. The seat belt cannot protect as intended and could result in additional injury.
- Objects or loads in the boot/load compartment cannot be restrained by the seat backrest.

▶ Make sure that the seat backrest and the rear bench seat/rear seat are engaged before every trip.

Requirements:

- The centre seat backrest has been unlocked.

The centre and outer seat backrests can be folded forwards.

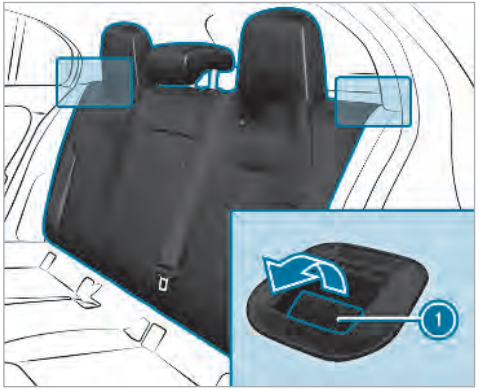

▶ **Left and right seat backrest:** if necessary, fully insert the seat backrest head restraints (→ page 91).

▶ Pull on release lever ①.

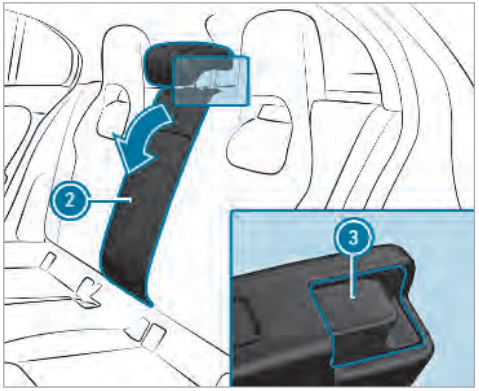

Ensure that the centre seat backrest is not locked.

▶ **Centre seat backrest:** pull release catch ③ of seat backrest ② forwards.

▶ Fold the corresponding seat backrest forwards.

Folding the rear seat backrest back

! NOTE Damage to the seat belt

The seat belt could become trapped and thus damaged when folding back the seat backrest.

▶ Make sure that the seat belt is not trapped when folding back the seat backrest.

▶ Move the driver's or front passenger seat forwards, if necessary.

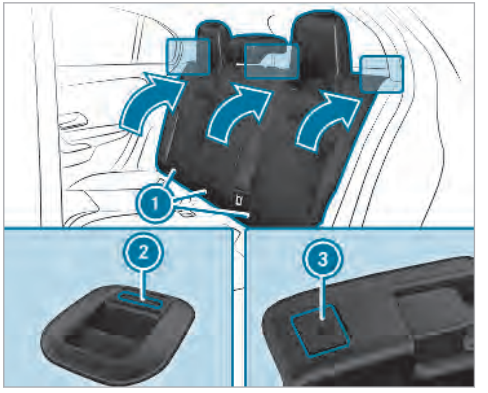

▶ Fold corresponding seat backrest ① back until it engages.
Left and right seat backrest: if the seat backrest is not engaged and locked, red lock verification indicator ② will be visible.

Centre seat backrest: if the seat backrest is not engaged and locked, red lock verification indicator ③ will be visible.

Blocking the release catch of the centre rear seat backrest

Requirements:

- The left and centre seat backrest are engaged and joined together.

You can lock the centre seat backrest. The centre seat backrest can then only be folded forwards together with the left seat backrest.

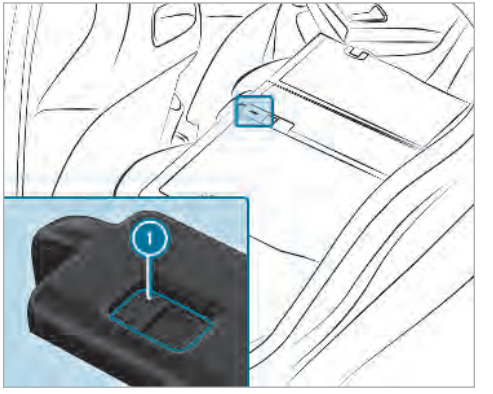

- Fold the centre and left seat backrest forwards.
- **To lock:** slide catch (1) upwards.
  The release mechanism of the centre seat backrest is locked.
- **To unlock:** slide catch (1) downwards.

Load compartment cover

Fitting and removing the load compartment cover

WARNING Risk of injury or death due to objects being poorly secured

On its own, the load compartment cover cannot secure or restrain heavy objects, items of luggage and heavy loads.

You could be hit by an unsecured load during sudden changes in direction, braking or in the event of an accident.

- Always stow objects in such a way that they cannot be thrown around.
- Secure objects, luggage or loads against slipping or tipping over, e.g. by using lashing material, even if you are using the load compartment cover.

Do not load the load compartment cover with more than 2.5 kg.

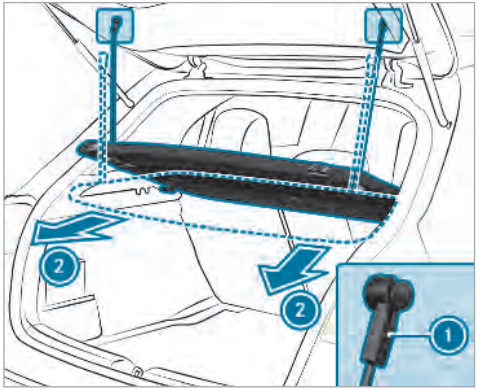

- **To remove:** pull the hanging clips (1) on the tailgate downwards and unhook them.
- Swivel the load compartment cover downwards and pull it out in the direction of arrow (2).
- **To install:** place the load compartment cover onto the guide rails on the left and right.
- Push the load compartment cover forwards until it engages.
- Swivel the load compartment cover upwards and hook the hanging clips (1) to the tailgate.

Attaching/removing the partition net

WARNING Risk of injury or death due to objects being poorly secured

On its own, the partition net cannot secure or restrain heavy objects, items of luggage and heavy loads.

You could be hit by an unsecured load during sudden changes in direction, braking or in the event of an accident.

- Always stow objects in such a way that they cannot be thrown around.
- Secure objects, luggage or loads against slipping or tipping over, e.g. by using lashing material, even when you are using the partition net.

For safety reasons, always use a partition net when transporting a load.

Damaged partition nets can no longer fulfil their functions and must be replaced. Visit a qualified specialist workshop.

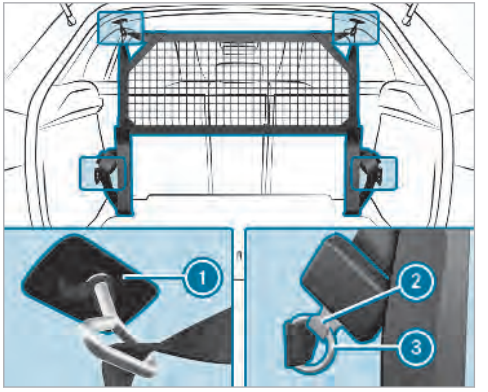

Partition net without load compartment enlargement

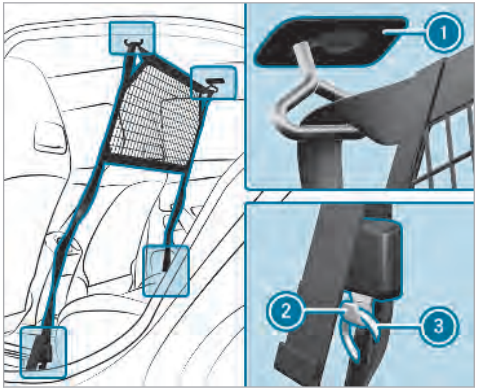

Partition net with load compartment enlargement

- **To attach:** attach the partition net to the holders (1) on the left and right on the roof lining.
- Without load compartment enlargement: attach the hooks (2) to the tie-down eyes (3) on the left and right in such a way that the hooks (2) point backwards.

- With load compartment enlargement: attach the hooks ② to the tie-down eyes ③ on the left and right in such a way that the hooks ② point to the door.
- Pull at the loose ends of the tie-down straps until the partition net is tight.

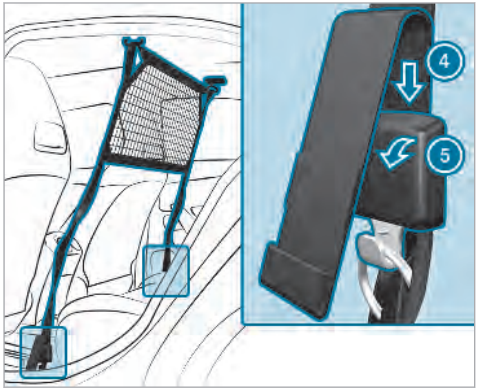

- **To remove:** turn the buckle of the tie-down strap in the direction of arrow ⑤.

- Slide the loose end of the tie-down strap into the buckle in the direction of arrow ④ until the tie-down straps are loose.
- Remove the hooks ② from the tie-down eyes ③ on the left and right.
- Remove the partition net from the holders ① on the roof lining on the left and right.

Overview of the tie-down eyes

Observe the notes on loading the vehicle (→ page 98).

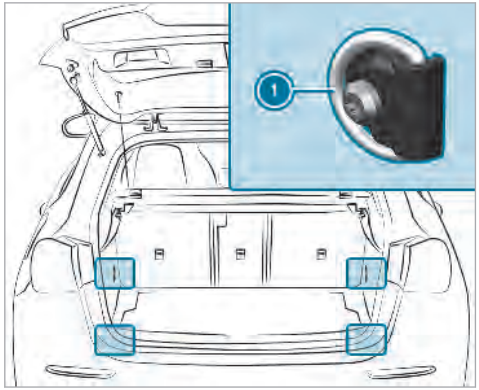

① Tie-down eyes (vehicles with through-loading feature in the rear bench seat)

Overview of bag hooks

WARNING Risk of injury when using bag hooks with heavy objects

The bag hooks cannot restrain heavy objects or items of luggage.

Objects or items of luggage could be thrown around and thereby hit vehicle occupants when braking or abruptly changing directions.

- Only hang light objects on the bag hooks.
- Never hang hard, sharp-edged or fragile objects on the bag hooks.

Observe the notes on loading the vehicle (→ page 98).

The bag hook can bear a maximum load of 3 kg. Do not use it to secure a load.

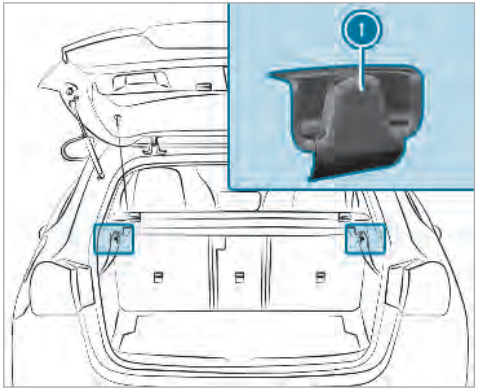

1 Bag hook

Opening or closing the stowage space under the load compartment floor

WARNING Risk of injury due to an open load compartment floor

If you drive when the load compartment floor is open, objects could be thrown around and thereby strike vehicle occupants. There is a risk of injury, particularly in the event of sudden braking or a sudden change in direction.

- Always close the load compartment floor before a journey.

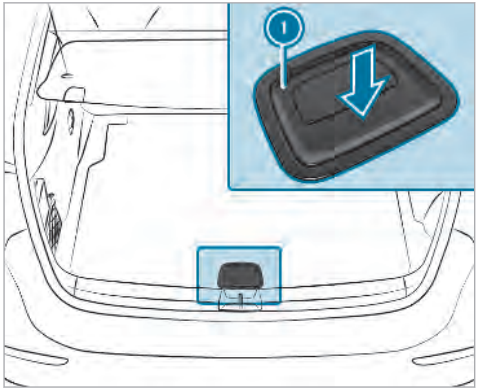

- **To open:** pull the handle ① upwards.
- Lift the load compartment floor upwards by handle ①.
- **To close:** fold the load compartment floor downwards and then press handle ① down until it engages.

Attaching the roof rack

WARNING Risk of injury by exceeding the maximum roof load

When you load the roof, the vehicle centre of gravity rises and the driving characteristics change.

If you exceed the maximum roof load, the driving characteristics, as well as the steering and braking, will be greatly impaired.

- Never exceed the maximum roof load and adjust your driving style.

You will find information on the maximum roof load in the "Technical data" section.

NOTE Vehicle damage from non-approved roof racks

The vehicle could be damaged by roof racks which have not been tested and approved by Mercedes-Benz.

- Only use roof racks tested and approved by Mercedes-Benz.
- Depending on the vehicle equipment, ensure that when the roof rack is fitted:
  - the sliding sunroof can be fully raised.
  - the boot lid can be fully opened.
- Position the load on the roof rack in such a way that the vehicle will not sustain damage even when it is in motion.

NOTE Damage to the panoramic sliding sunroof when a roof rack is fitted

The panoramic sliding sunroof may be damaged by the roof rack if you attempt to open it when the roof rack is fitted.

- Do not open the panoramic sliding sunroof if a roof rack is fitted.

In order to allow ventilation of the vehicle interior, you can raise the panoramic sliding sunroof.

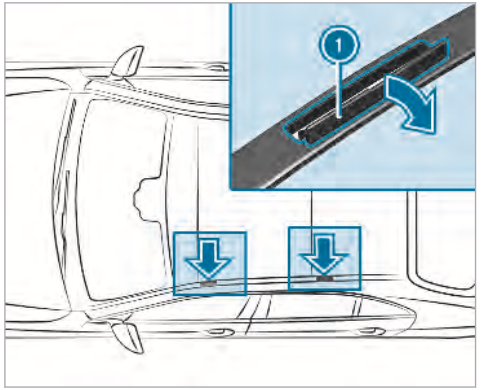

NOTE Damage to the covers

The covers may be damaged and scratched when being opened.

- Do not use metallic or hard objects.

- Fold covers (1) carefully upwards in the direction of the arrow.
- Secure the roof rack to the anchorage points under covers (1).
- Comply with the roof rack manufacturer's installation instructions.
- Secure the load on the roof rack.

Cup holders

Fitting the cup holder in or removing it from the centre console (automatic transmission)

WARNING - Risk of accident or injury when using the cup holder while the vehicle is in motion

The cup holder cannot hold a container secure while the vehicle is in motion.

If you use a cup holder while the vehicle is in motion, the container may be flung around and liquids could be spilled. The vehicle occupants may come into contact with the liquid and if it is hot, they could be scalded. You could be distracted from traffic conditions and you may lose control of the vehicle.

- Only use the cup holder when the vehicle is stationary.
- Only use the cup holder for containers of the right size.
- Always close the container, particularly if the liquid is hot.

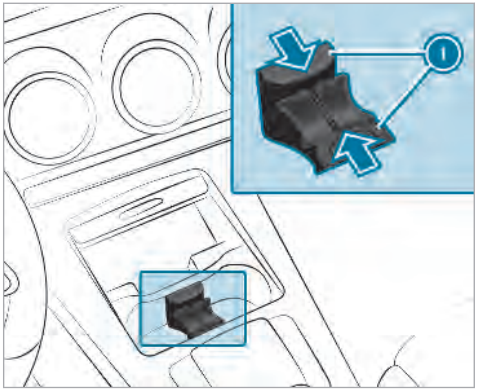

Cup holder in the stowage compartment with cover

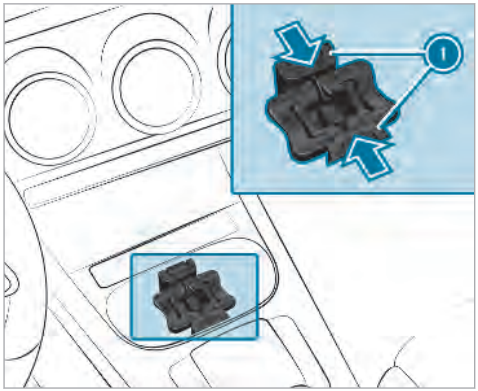

Cup holder in the stowage compartment without cover

- **To remove:** Slide the snap-in brackets (1) of the cup holder inwards until they are unlocked.
- Move the cup holder upwards out of the stowage compartment.

ⓘ The cup holder and the rubber mat beneath it can be removed for cleaning, e.g. with clear, lukewarm water.

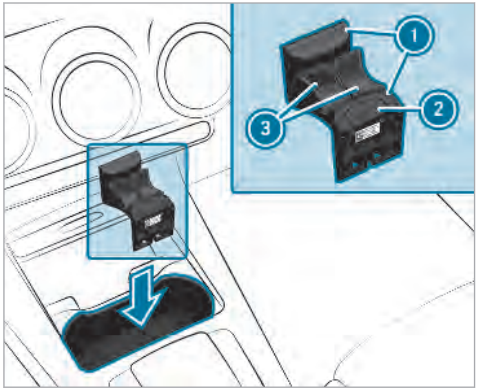

Cup holder in the stowage compartment with cover

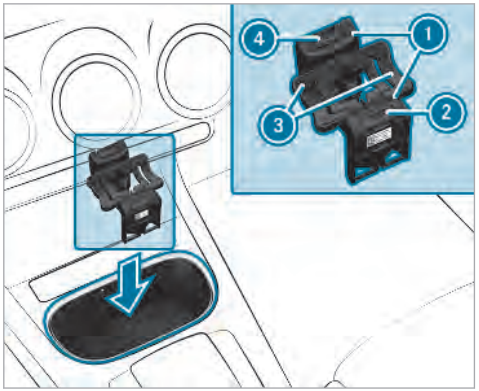

Cup holder in the stowage compartment without cover

- **To fit:** If necessary, open the stowage compartment cover and insert the cup holder, as shown, into the stowage compartment with the sign to the vehicle interior.
- Slide the cup holder onto the bars in the stowage compartment.

- Slide the snap-in brackets ① outwards until they engage.
- Press button ② and/or ④.
  The wings ③ fold upwards.

ⓘ The cup holder wings can be folded downwards and engaged. The cup holder's holding function will then not be available.

Opening or closing the cup holder in the rear armrest

! NOTE Damage to the rear seat armrest

When folded out, the rear seat armrest can be damaged by the weight of your body.

- Do not sit or support yourself on the rear seat armrest.

! NOTE Damage to the cup holder

When the rear armrest is folded back the cup holder could become damaged.

- Only fold the rear armrest back when the cup holder is closed.

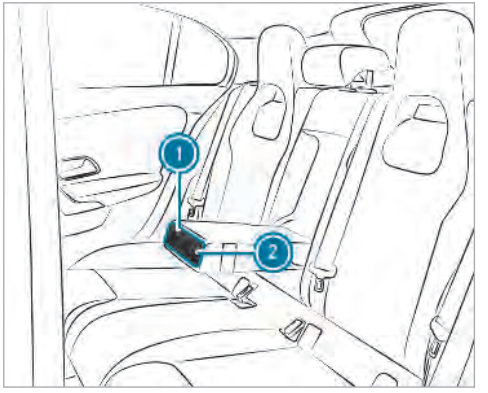

- **To open:** press cup holder ① or ②.
  The cup holder ① or ② extends automatically.
- **To close:** push the cup holder ① or ② back until it engages.

Ashtray and cigarette lighter

Using the ashtray

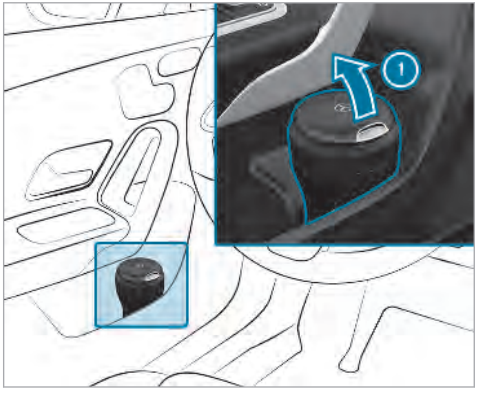

- **While driving:** place the closed ashtray in the front door stowage compartment while driving.
- Check that it is seated firmly.
- Comply with the notes on loading the vehicle (→ page 98).

▶ **To open:** fold lid ① upwards.

ⓘ Twist the top part of the ashtray to remove it for cleaning, e.g. with clear, lukewarm water, or for emptying.

Using the cigarette lighter in the front centre console

⚠ **WARNING** - Risk of fire and injury from the hot cigarette lighter

You can burn yourself if you touch the hot heating element or the socket of the cigarette lighter.

In addition, flammable materials may ignite if:

- you drop the hot cigarette lighter
- a child holds the hot cigarette lighter to objects, for example

▶ Always hold the cigarette lighter by the knob.

▶ Always make sure that the cigarette lighter is out of reach of children.

▶ Never leave children unattended in the vehicle.

Requirements:

- The ignition is switched on.

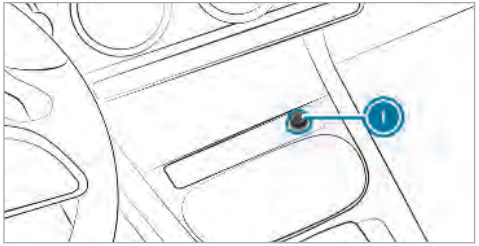

▶ Press in cigarette lighter ①.
The cigarette lighter will pop out automatically when the heating element is red-hot.

Sockets

12 V socket in the front centre console

Requirements:

- Only devices with up to a maximum of 180 watts (15 A) are permissible.

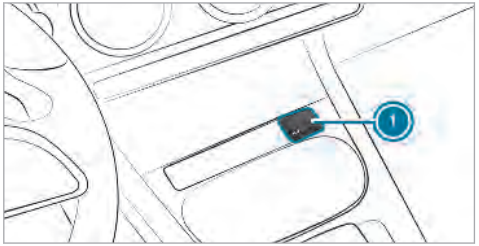

▶ Lift up socket cap ①.

▶ Insert the plug of the device.

12 V socket in the stowage compartment with cover: if you have connected a device to the 12 V socket, leave the cover of the stowage compartment open.

Using the 230 V socket in the rear

⚠ **DANGER** Risk of fatal injury due to damaged connecting cables or sockets

When a suitable device is connected, the 230 V power socket will be carrying a high voltage. You could receive an electric shock if the connecting cable or the 230 V power socket is pulled out of the trim or is damaged or wet.

- ▶ Use only connecting cables that are dry and free of damage.
- ▶ When the ignition is switched off, make sure that the 230 V power socket is dry.
- ▶ Immediately have the 230 V power socket checked or replaced at a qualified specialised workshop if it is damaged or has been pulled out of the trim.
- ▶ Never plug the connecting cable into a 230 V power socket that is damaged or has been pulled out of the trim.

⚠ **DANGER** Risk of fatal injury due to incorrect handling of the socket

You could receive an electric shock:

- if you reach into the socket.
- if you insert unsuitable devices or objects into the socket.

- ▶ Only connect suitable devices to the socket.

Requirements:

- Devices must be equipped with a suitable plug which conforms to the standards specific to the country you are in.
- Only devices up to a maximum of 150 watts are permitted.
- Multiple sockets are not permitted.

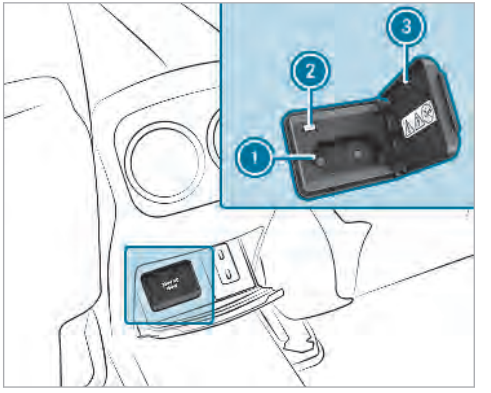

- ▶ Open flap ③.
- ▶ Insert the plug of the device into 230 V socket ①.
  When the on-board electrical system voltage is sufficient, indicator lamp ② lights up.

USB port in the rear

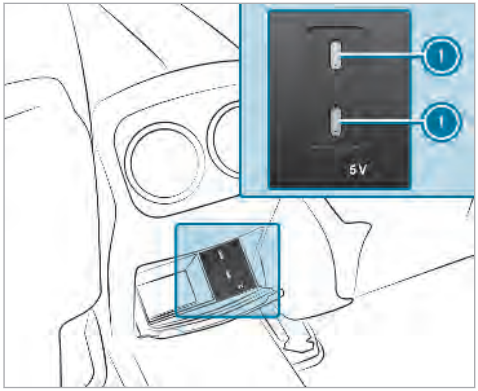

If the ignition is switched on you can charge a USB device, e.g. a mobile phone, at USB ports (1) using a suitable charging cable.

Wireless charging of the mobile phone and connection with the exterior aerial

Notes on wireless charging of the mobile phone

WARNING Risk of injury due to objects being stowed incorrectly

If objects in the vehicle interior are stowed incorrectly, they can slide or be thrown around and hit vehicle occupants. In addition, cup holders, open stowage spaces and mobile phone receptacles cannot always retain all objects they contain.

There is a risk of injury, particularly in the event of sudden braking or a sudden change in direction.

- Always stow objects so that they cannot be thrown around in such situations.
- Always make sure that objects do not protrude from stowage spaces, luggage nets or stowage nets.
- Close the lockable stowage spaces before starting a journey.
- Always stow and secure heavy, hard, pointed, sharp-edged, fragile or bulky objects in the boot/load compartment.

Observe the notes on loading the vehicle.

WARNING Risk of fire from placing objects in the mobile phone stowage compartment

If you place objects in the mobile phone stowage compartment, they may heat up excessively and even catch fire.

- Do not place additional objects, especially those mode of metal, in the mobile phone stowage compartment.

NOTE Damage to objects caused by placing them in the mobile phone stowage compartment

If you place objects in the mobile phone stowage compartment, these may be damaged by electromagnetic fields.

▶ Do not place credit cards, storage media or other objects sensitive to electromagnetic fields in the mobile phone stowage compartment.

NOTE Damage to the mobile phone stowage compartment caused by liquids

If liquids enter the mobile phone stowage compartment, the compartment may be damaged.

▶ Ensure that no liquids enter the mobile phone stowage compartment.

- Depending on the vehicle equipment, the mobile phone is connected to the vehicle's exterior aerial via the charging module.
- The charging function and wireless connection of the mobile phone to the vehicle's exterior aerial are only available if the ignition is switched on.
- Small mobile phones may not be able to be charged in every position of the mobile phone stowage compartment.
- Large mobile phones which do not rest flat in the mobile phone stowage compartment may not be able to be charged or connected with the vehicle's exterior aerial.
- The mobile phone may heat up during the charging process. This depends on the applications (apps) currently running.
- To ensure more efficient charging and connection with the vehicle's exterior aerial, remove the protective cover from the mobile phone. Protective covers which are designed for wireless charging are excluded.

Wireless charging of the mobile phone in the front

Requirements:

- The mobile phone is suitable for wireless charging (Qi compatible mobile phone).

ⓘ A list of Qi compatible mobile phones can be found at: http://www.mercedes-benz.com/connect.

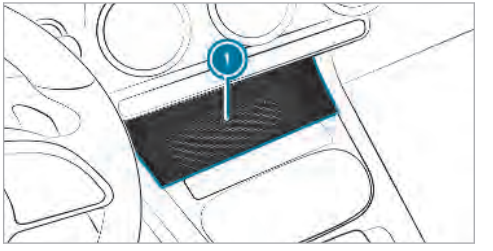

- Place the mobile phone as close to the centre of mat ① as possible with the display facing upwards.
  When the charging symbol is shown in the multimedia system, the mobile phone is being charged.

  Malfunctions during the charging process are shown in the multimedia system display.

ⓘ The mat can be removed for cleaning, e.g. using clean, lukewarm water.

Stowage compartment without cover

Secure your mobile phone so it does not get thrown about during the journey.

- **To secure mobile phone:** swing lever ② out.

Fitting/removing the floor mats

⚠ **WARNING** Risk of accident due to objects in the driver's footwell

Objects in the driver's footwell may impede pedal travel or block a depressed pedal.

This jeopardises the operating and road safety of the vehicle.

- Stow all objects in the vehicle securely so that they cannot get into the driver's footwell.
- Always fit the floor mats securely and as prescribed in order to ensure that there is always sufficient room for the pedals.
- Do not use loose floor mats and do not place floor mats on top of one another.

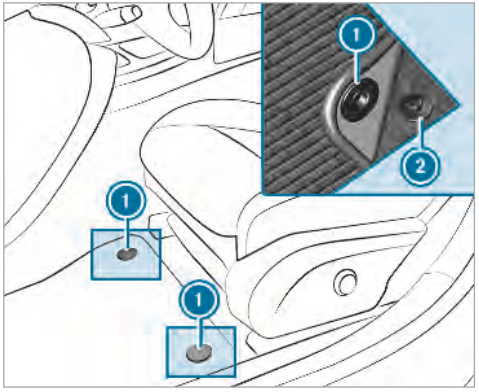

- **To install:** slide the seat backwards and lay the floor mat into the footwell.
- Press the studs ① onto the holders ②.
- Adjust the corresponding seat.
- **To remove:** pull the floor mat off the holders ②.
- Remove the floor mat.

Exterior lighting

Notes on changing the lights when driving abroad

It is not necessary to change the headlamps. The legal requirements are also met in countries where traffic drives on the other side of the road.

Lighting systems and your responsibility

The various lighting systems of the vehicle are only aids. The driver of the vehicle is responsible for correct vehicle illumination in accordance with the prevailing light and visibility conditions, legal requirements and traffic situation.

Light switch

Operating the light switch

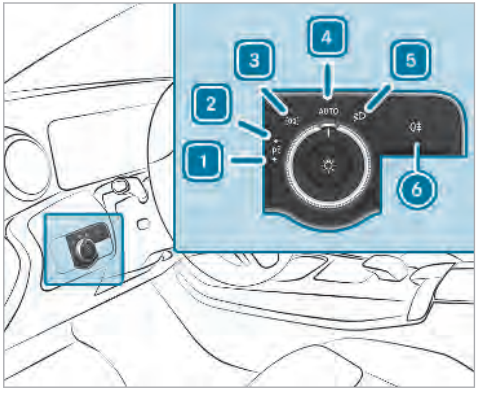

1 Left-hand parking lights
2 Right-hand parking lights
3 Standing lights and licence plate lighting
4 AUTO Automatic driving lights (preferred light switch position)
5 Dipped beam/main beam
6 Switches the rear fog light on or off

When dipped beam is activated, the indicator lamp for the standing lights is deactivated and replaced by the dipped beam indicator lamp .

▶ Always park your vehicle safely and in a well-lit area, in accordance with the relevant legal stipulations.

! NOTE Battery discharging by operating the standing lights

Operating the standing lights over a period of hours puts a strain on the battery.

▶ Where possible, switch on the right or left parking light.

In the case of severe battery discharging, the standing lights or parking lights are automatically switched off to facilitate the next engine start.

The exterior lighting (except standing and parking lights) switches off automatically when the driver's door is opened.

- Observe the notes on surround lighting (→ page 124).

Automatic driving lights function

The standing lights, dipped beam and daytime running lights are switched on automatically depending on the ignition status, whether the engine is running and the light conditions.

> ⚠ **WARNING** Risk of accident when the dipped beam is switched off in poor visibility
>
> When the light switch is set to AUTO, the dipped beam may not be switched on automatically if there is fog, snow or other causes of poor visibility such as spray.
>
> ▶ In such cases, turn the light switch to ≡D.

The automatic driving lights are only an aid. You are responsible for vehicle lighting.

Activating/deactivating the rear fog light

Requirements:

- The light switch is in the ≡D or AUTO position.

▶ Press the 0⇶ button.

Please observe the country-specific laws on the use of rear fog lamps.

Adjusting the headlamp range (halogen headlamps)

The headlamp range adjuster allows you to adjust the cone of light from the headlamps in relation to the vehicle's load condition.

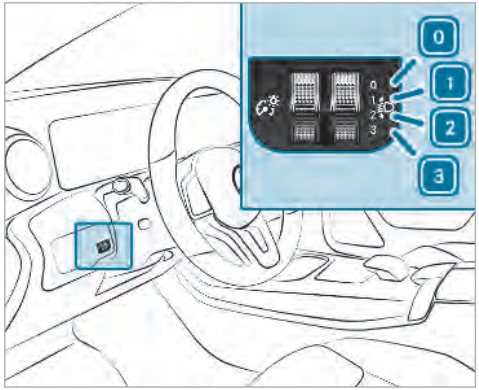

0 Driver's seat and front passenger seat occupied

1 Driver's seat, front passenger seat and rear seats occupied

2 Driver's seat, front passenger seat and rear seats occupied, load compartment laden

3 Driver's seat and front passenger seat occupied and maximum permissible rear axle load utilised

▶ Turn the headlamp range adjuster to the position that corresponds to the load condition of your vehicle.

Operating the combination switch for the lights

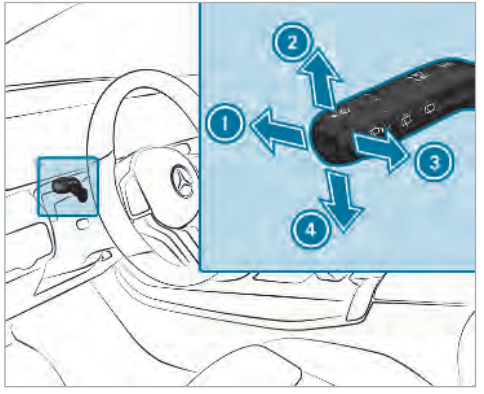

① Main beam
② Turn signal light, right
③ Headlamp flasher
④ Turn signal light, left

▶ Use the combination switch to activate the desired function.

Main beam

▶ **To switch on:** turn the light switch to the [≡D] or [AUTO] position.

▶ Press the combination switch in the direction of arrow ①.
When the main beam is activated, the indicator lamp for dipped beam [≡D] is deactivated and replaced by the indicator lamp for the main beam [≡D].

▶ **To switch off:** press the combination switch in the direction of arrow ① or pull in the direction of arrow ③.

Headlamp flasher

▶ Pull the combination switch in the direction of arrow ③.

Turn signal lights

▶ **To indicate briefly:** press the combination switch briefly up to the point of resistance in the direction of arrow ② or ④.
The corresponding turn signal light flashes three times.

▶ **To indicate permanently:** press the combination switch beyond the point of resistance in the direction of arrow ② or ④.
Vehicles with Active Lane Keeping Assist: Active Lane Keeping Assist can:

- lengthen turn signal operation for the duration of the lane change if the driver has activated the turn signal indicator.
- automatically activate the turn signal indicator if the driver indicated to turn in that direction immediately before but a lane change was not immediately possible.

Activating/deactivating the hazard warning light

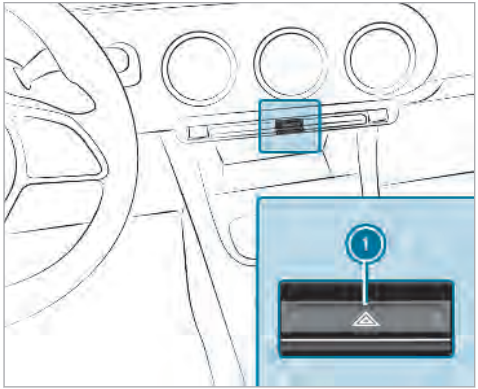

▶ Press the ① button.

The hazard warning lamps switch on automatically if:

- The airbag has been deployed.
- The vehicle brakes sharply from a speed of more than 70 km/h to a standstill.

The hazard warning lamps switch off automatically when the vehicle reaches a speed exceeding 10 km/h following maximum full-stop braking.

Adaptive functions, MULTIBEAM LED

Functions of the Intelligent Light System

The MULTIBEAM LED headlamps adapt to the driving and weather situation and provide extended functions for improving illumination of the road.

The system comprises the following functions:

- Active headlamps(→ page 119)
- Cornering light(→ page 120)
- Motorway mode (→ page 120)
- City lighting (→ page 120)

System limitations

- The system is active only when it is dark.

Active headlamps function

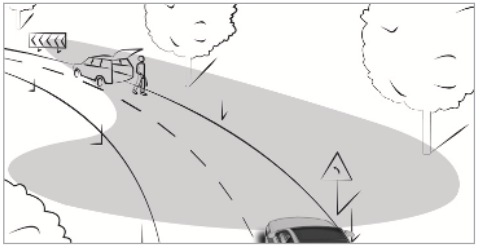

- The headlamps follow the steering movements.
- Relevant areas are better illuminated during travel.

The functions are active when the main beam is switched on.

Cornering light function

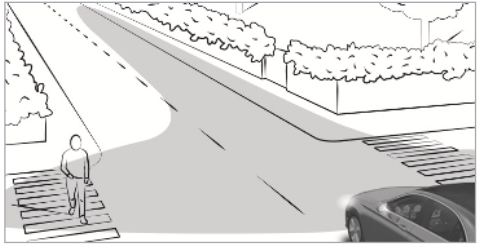

The cornering light improves the illumination of the carriageway over a wide angle in the turning direction, enabling better visibility on tight bends, for example. It can be activated only when the dipped beam is switched on.

The function is active:

- At speeds below 40 km/h when the turn signal light is switched on or the steering wheel is turned.
- At speeds between 40 km/h and 70 km/h when the steering wheel is turned.

Roundabout and intersection function: the cornering light is activated on both sides through an evaluation of the current GPS position of the vehicle. It remains active until after the vehicle has left the roundabout or the intersection.

Motorway mode function

Motorway mode increases the range and brightness of the cone of light, enabling better visibility.

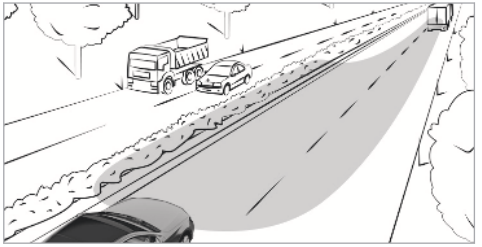

The function is active if a motorway journey is detected by:

- The vehicle's speed.
- The multifunction camera.
- The GPS.

The function is not active:

- At speeds below 80 km/h.

Function of City lighting

City lighting improves the illumination of roadsides within built-up areas using a broader distribution of light.

The function is active:

- at lower speeds
- in illuminated parts of built-up areas.

Switching the Intelligent Light System on/off

Requirement:

- the ignition is switched on

Multimedia system:

→ [⌂] ▸▸ Settings ▸▸ Lights ▸▸ Multibeam LED

▶ Activate or deactivate the function.

Adaptive Highbeam Assist

Function of Adaptive Highbeam Assist

⚠ **WARNING** Risk of accident despite Adaptive Highbeam Assist

Adaptive Highbeam Assist does not recognise the following road users:

- Road users without lights, e.g. pedestrians
- Road users with poor lighting, e.g. cyclists
- Road users whose lighting is obstructed, e.g. by a barrier

On very rare occasions, Adaptive Highbeam Assist may fail to recognise other road users with their own lighting, or may recognise them too late.

In this, or in similar situations, the automatic main beam will not be deactivated or will be activated despite the presence of other road users.

▶ Always observe the traffic carefully and switch off the main beam in good time.

System limitations

Adaptive Highbeam Assist cannot take into account road, weather or traffic conditions.

Detection may be restricted if:

- Visibility is impaired, for example in fog, heavy rain or snow.
- There is dirt on the sensors or the sensors are obscured.

Adaptive Highbeam Assist is only an aid. You are responsible for adjusting the vehicle's lighting to the prevailing light, visibility and traffic conditions.

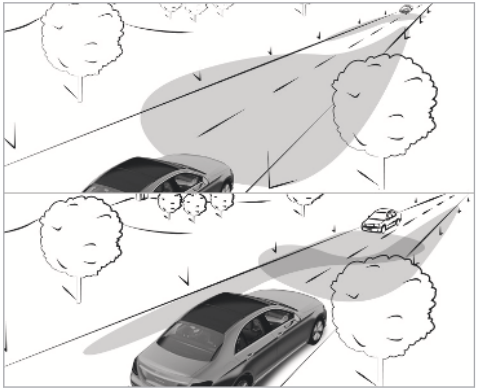

Adaptive Highbeam Assist switches automatically between:

- Dipped beam
- Main beam

At speeds above 30 km/h:

- If no other road users are detected, the main beam is automatically switched on.

The main beam switches off automatically:

- At speeds below 25 km/h.
- If other road users are detected.
- If street lighting is sufficient.

At speeds above approx. 50 km/h:

- The headlamp range of the dipped beam is regulated automatically based on the distance to other road users.

The system's optical sensor is located behind the windscreen near the overhead control panel.

Switching Adaptive Highbeam Assist on/off

▶ **To switch on:** turn the light switch to the AUTO position.

▶ Switch on the main beam using the combination switch.
When the main beam is switched on automatically in the dark, the indicator lamp in the multifunction display comes on.

▶ **To switch off:** switch off the main beam using the combination switch.

Adaptive Highbeam Assist Plus

Adaptive Highbeam Assist Plus function

⚠ **WARNING** Risk of accident despite Adaptive Highbeam Assist Plus

Adaptive Highbeam Assist Plus does not recognise the following road users:

- Road users without lights, e.g. pedestrians
- Road users with poor lighting, e.g. cyclists
- Road users whose lighting is obstructed, e.g. by a barrier

On very rare occasions, Adaptive Highbeam Assist Plus may fail to recognise other road users that have lights, or may recognise them too late.

In this, or in similar situations, the automatic main beam will not be deactivated or will be activated despite the presence of other road users.

▶ Always observe the traffic carefully and switch off the main beam in good time.

System limitations

Adaptive Highbeam Assist Plus cannot take into account road, weather or traffic conditions.

Detection may be restricted if:

- Visibility is impaired, for example in fog, heavy rain or snow.
- There is dirt on the sensors or the sensors are obscured.

Adaptive Highbeam Assist Plus is only an aid. You are responsible for adjusting the vehicle's lighting to the prevailing light, visibility and traffic conditions.

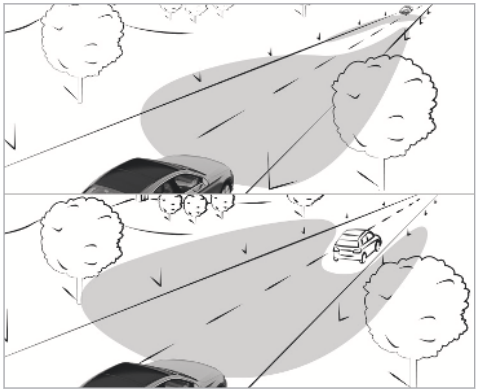

Adaptive Highbeam Assist Plus switches automatically between:

- Dipped beam
- Partial main beam
- Main beam

The partial main beam uses the main beam to shine past other road users rather than dazzling them. The vehicle in front is illuminated by the dipped beam.

At speeds above 30 km/h:

- If no other road users are detected, the main beam is automatically switched on.
- If other road users are detected, the partial main beam is automatically switched on.

At speeds below 25 km/h or when there is sufficient street lighting:

- The main beam switches off automatically.
- The partial main beam switches off automatically.

The system's optical sensor is located behind the windscreen near the overhead control panel.

Switching Adaptive Highbeam Assist Plus on/off

▶ **To switch on:** turn the light switch to the AUTO position.

▶ Switch on the main beam using the combination switch.
When the main beam is switched on automatically in the dark, the indicator lamp on the multifunction display comes on.

▶ **To switch off:** switch off the main beam using the combination switch.

Setting the dipped beam

Vehicles with MULTIBEAM LED headlamps only.

Multimedia system:

→ ⌂ ▸▸ Settings ▸▸ Lights ▸▸ Dipped-beams

▶ Select Right-side traffic, Left-side traffic or Automatic.

Setting the exterior lighting switch-off delay time

Requirements:

- The light switch is in the AUTO position.

Multimedia system:

→ [⌂] ▸▸ Settings ▸▸ Lights ▸▸ Exterior light shut-off

The exterior lighting is activated for the configured time when the vehicle is parked.

▶ Set the switch-off delay time.

Switching the surround lighting on/off

Multimedia system:

→ [⌂] ▸▸ Settings ▸▸ Lights ▸▸ Surround lighting

The exterior lighting remains lit for 40 seconds after the vehicle is unlocked. When you start the vehicle, the surround lighting is deactivated and the automatic driving lights are activated.

▶ Activate or deactivate the function.

Interior lighting

Adjusting the interior lighting

Front overhead control panel

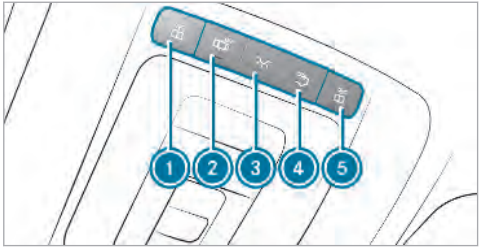

1. Front left reading lamp
2. Automatic interior lighting control
3. Front interior lighting
4. Rear interior lighting
5. Front right reading lamp

▶ **To switch on or off:** press the 1 - 5 button.

Control panel in the grab handle

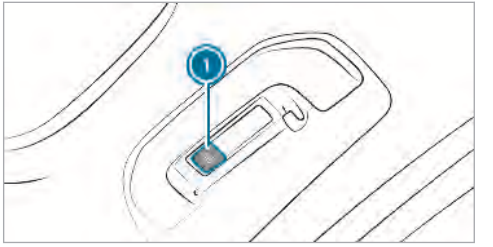

1. Rear reading lamp

▶ **To switch on or off:** press the 1 button.

Adjusting the ambient lighting

Multimedia system:

→ [⌂] ▸▸ Settings ▸▸ Lights ▸▸ Ambient lighting

Setting the colour and brightness

▶ Select Settings.

▶ Set the colour and brightness values.

ⓘ 64 colours are available.

Activating the brightness for zones

▶ Select Settings.

▶ Select Brightness zones.

▶ Activate or deactivate the function.
The Emphasis, Ambient and Vents zones can be set separately.

ⓘ Fewer zones may be available depending on the vehicle equipment.

Activating multi-coloured lighting

▶ Select Settings.

▶ Select Multi-colour.

▶ Activate or deactivate the function.
There are ten preset colour combinations available.

Activating multi-coloured animation

▶ Select Multi-colour animat..

▶ Activate or deactivate the function.
The chosen colour combination changes in a predefined rhythm.

Activating welcome lighting

▶ Select Welcome.

▶ Activate or deactivate the function.
When the vehicle is unlocked, a special interior lighting sequence runs.

Activating dependency on air conditioning settings

▶ Select Climate.

▶ Activate or deactivate the function.
If changes are made to the temperature setting in the vehicle, the colour of the ambient lighting changes briefly.

Switching the inner switch-off delay time on/off

Multimedia system:

→ ⌂ ▸▸ Settings ▸▸ Lights ▸▸ Interior light shut-off

▶ Switch the switch-off delay time on or off.

Changing bulbs (only for vehicles with halogen headlamps)

Notes on changing bulbs

⚠ **WARNING** Risk of burns from hot component parts whilst replacing a bulb

Bulbs, lamps and plugs can become very hot during operation.

When replacing a bulb, you could burn yourself on these component parts.

▶ Allow the component parts to cool down before replacing the bulb.

- Do not use a bulb if it has been dropped or if its glass has been scratched. The bulb may otherwise explode.
- Do not touch the glass bulb with your bare hands.
- Protect bulbs from moisture and do not allow bulbs to come into contact with liquids.

Overview of the bulbs to be changed

Halogen headlamps

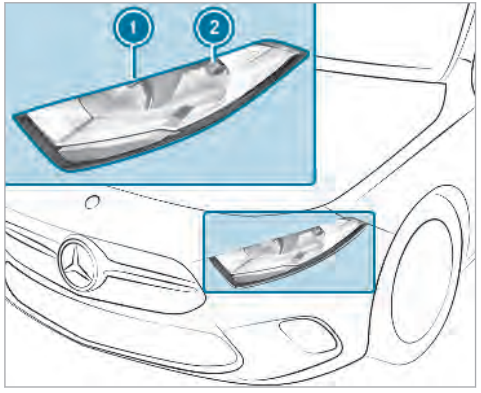

1. Main beam: bulb H7 55 W
2. Dipped beam: bulb H7 55 W

Tail lamps

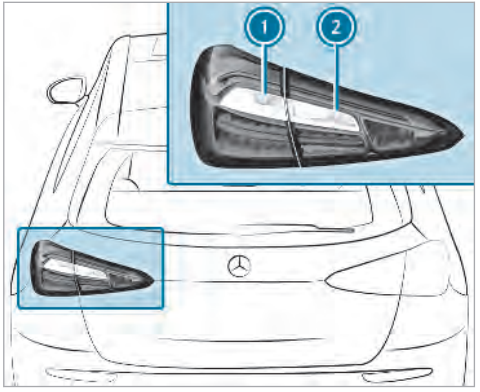

1. Turn signal light: bulb PY 21 W
2. Reversing light: bulb W 16 W

Changing the front bulbs (vehicles with halogen headlamps)

Fitting/removing the cover on the front wheel arch

Requirements:

- The lighting system is switched off.
- The appropriate front wheel is turned inwards.

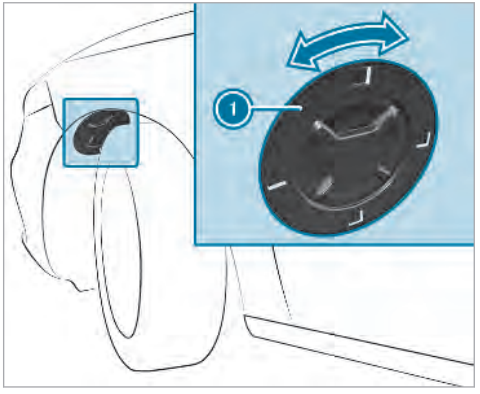

- **To remove:** turn the cover ① to the left and remove it from the wheel arch liner.
- **To install:** insert the cover ① into the wheel arch liner and turn it to the right until it engages.

Replacing bulbs in the halogen headlamp

Requirements:
- **Dipped beam:** bulb type H7 55 W
- **Main beam:** bulb type H7 55 W

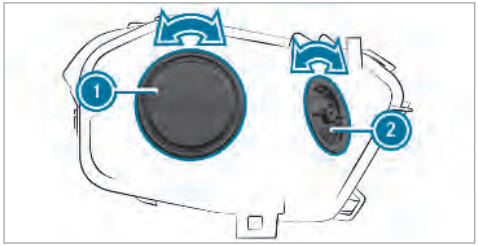

① Dipped beam housing cover
② Main beam housing cover

- Switch the lighting system off.
- Remove the cover in the front wheel arch (→ page 126).
- Turn the relevant housing cover anti-clockwise and remove it.
- Turn the socket anti-clockwise and remove it.
- Pull the bulb out of the socket.
- Insert the new bulb into the socket such that the entire base of the bulb is resting on the bottom of the socket.
- Insert the socket and turn it clockwise.
- Press on the housing cover and turn it clockwise.
- Replace the cover in the front wheel arch (→ page 126).

Changing the rear bulbs (vehicles with halogen headlamps)

Replacing the tail lamp bulbs
- Due to their locations, have the bulbs for the turn signal light and reversing light changed at a qualified specialist workshop.

Windscreen wipers and windscreen washer system

Switching the windscreen wipers on/off

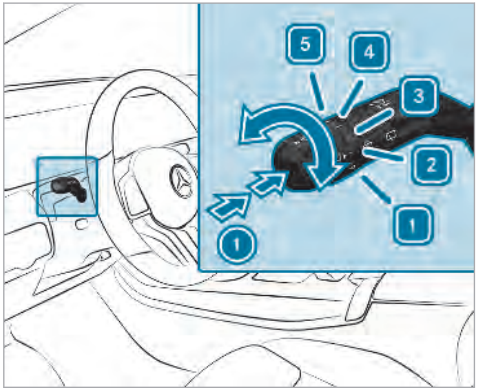

① Single wipe / wipes with washer fluid
1 0 Windscreen wipers off
2 • • • Intermittent wiping, normal
Vehicles with rain sensor: normal automatic wiping

3 Intermittent wiping, frequent
Vehicles with rain sensor: frequent automatic wiping
4 Continuous wiping, slow
5 Continuous wiping, fast

▶ Turn the combination switch to the correct position 1 - 5.

▶ **Single wipe / washing:** push the button on the combination switch in the direction of arrow 1.
- Single wipe
- Wiping with washer fluid

Switching the rear window wiper on/off

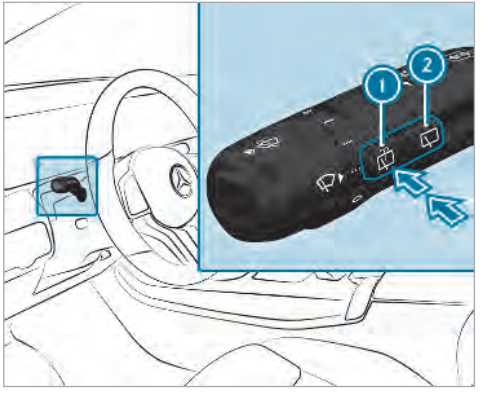

1 Single wipe / washing
2 Intermittent wiping

▶ **Single wipe:** press button 1 to the point of resistance.

▶ **Wiping with washer fluid:** press button 1 beyond the point of resistance.

▶ **Switching intermittent wiping on or off:** press button 2.
The symbol appears on the instrument cluster when the rear window wiper is switched on.

Replacing the windscreen wiper blades

⚠ **WARNING** Risk of becoming trapped if the windscreen wipers are switched on while wiper blades are being replaced

If the windscreen wipers begin to move while you are changing the wiper blades, you can be trapped by the wiper arm.

▶ Always switch off the windscreen wipers and ignition before changing the wiper blades.

Removing the wiper blades

▶ Switch off the ignition.

- Within around 15 seconds, press button ① on the combination switch (→ page 127). The wiper arms move into the change position.
- Fold the wiper arms away from the windshield.

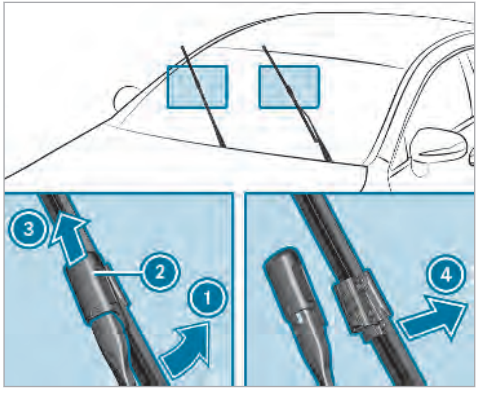

- Hold the wiper arm with one hand. With the other hand, turn the wiper blade in the direction of arrow ① away from the wiper arm as far as it will go.
- Slide catch ② in the direction of arrow ③ until it engages in the removal position.
- Remove the wiper blade in the direction of arrow ④ away from the wiper arm.

Fitting the wiper blades

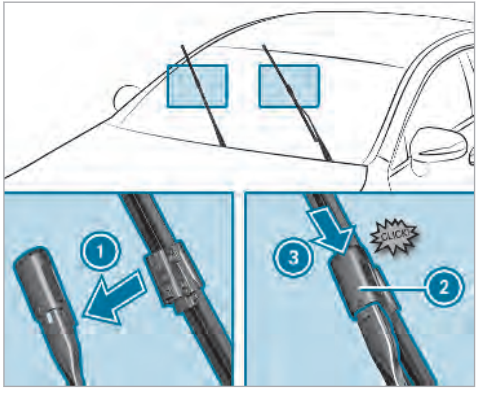

- Insert the new wiper blade into the wiper arm in the direction of arrow ①.
- Slide catch ② in the direction of arrow ③ until it engages in the locking position.
- Make sure that the wiper blade sits correctly.
- Fold the wiper arms back onto the windscreen.

Maintenance display

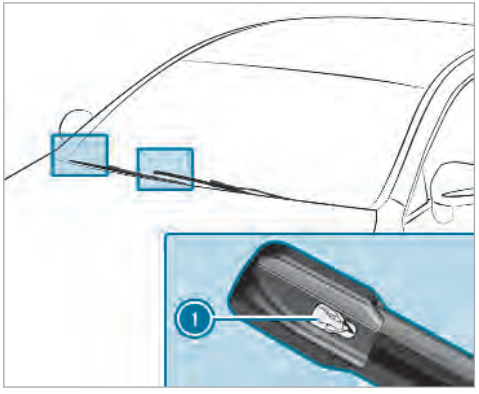

- Remove protective film ① of the maintenance display on the tip of the newly fitted wiper blades.

If the colour of the maintenance display changes from black to yellow, the wiper blades should be replaced.

ⓘ The duration of the colour change varies depending on the usage conditions.

Changing the rear window wiper blade

Removing the wiper blade

- Switch off the ignition.

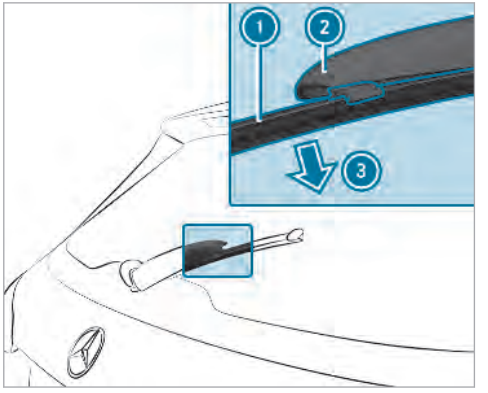

- Fold wiper arm ② away from the rear window until it engages in the change position.
- Unclip wiper blade ① on wiper arm ② and remove it in the direction of arrow ③.

Fitting the wiper blade

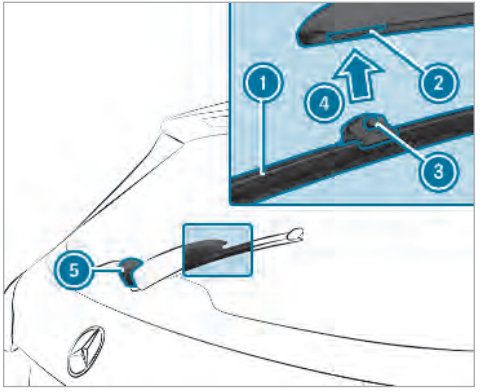

- Position wiper blade ① with both lugs ③ on holder ② on the wiper arm.
- Press wiper blade ① in the direction of arrow ④ until it engages in the holder ②.
- Make sure that wiper blade ① sits correctly.
- Fold the wiper arm from the change position back onto the rear window.

Mirrors

Operating the outside mirrors

⚠ **WARNING** Risk of injury through adjusting vehicle settings while the vehicle is in motion

You could lose control of the vehicle in the following situations:

- if you adjust the driver's seat, the head restraints, the steering wheel or the mirror while the vehicle is in motion
- if you fasten your seat belt while the vehicle is in motion

▶ Before starting the engine: adjust the driver's seat, the head restraints, the steering wheel or the mirror and fasten your seat belt.

⚠ **WARNING** Risk of accident due to misjudgement of distances when using the outside mirror

The outside mirrors reflect objects on a smaller scale. The objects in view are in fact closer than they appear.

As a result, you may misjudge the distance between you and the road user driving behind you, e.g. when changing lanes.

▶ Therefore, always look over your shoulder in order to ensure that you are aware of the actual distance between you and the road users driving behind you.

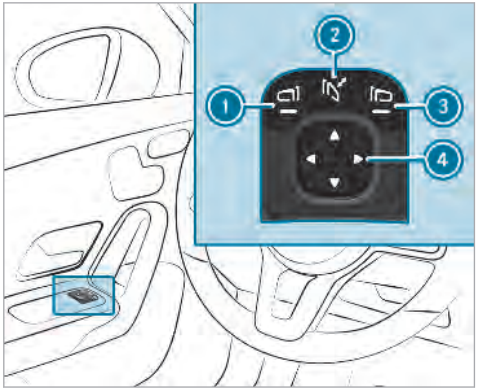

▶ **To fold in or out:** briefly press button ②.

▶ **To set:** press button ① or ③ to select the outside mirror to be adjusted.

▶ Press button ④ to adjust the position of the mirror glass.

ⓘ If the battery has been disconnected or completely discharged, you must reset the outside mirrors. Only then will the automatic mirror folding function work properly.

▶ **To adjust:** briefly press button ②.

An outside mirror that has been pushed out of position can be engaged in position again in the following manner:

▶ **Vehicles without electrically folding outside mirrors:** manually move the outside mirror into the correct position.

▶ **Vehicles with electrically folding outside mirrors:** press and hold button ②.
You will hear a click and the mirror will audibly engage in position. The outside mirror is set to the correct position.

Automatic anti-dazzle mirrors function

⚠ **WARNING** Risk of burns and poisoning due to the anti-dazzle mirror electrolyte

Electrolyte may escape if the glass in an automatic anti-dazzle mirror breaks.

The electrolyte is harmful and causes irritation. It must not come into contact with your skin, eyes, respiratory organs or clothing or be swallowed.

▶ If you come into contact with electrolyte, observe the following:
- Rinse the electrolyte from your skin and seek medical attention immediately.
- If electrolyte comes into contact with your eyes, rinse them thoroughly with clean water and seek medical attention immediately.
- If the electrolyte is swallowed, immediately rinse your mouth out thoroughly. Do not induce vomiting. Seek medical attention immediately.
- Immediately change out of clothing which has come into contact with electrolyte.
- If an allergic reaction occurs, seek medical attention immediately.

The inside rear-view mirror and the outside mirror on the driver's side automatically go into anti-dazzle mode if light from a headlamp hits the sensor on the inside rear-view mirror.

System limitations

The system does not go into anti-dazzle mode in the following situations:
- the engine is switched off.
- reverse gear is engaged
- the interior lighting is switched on

Function of the passenger outside mirror parking position

ⓘ The parking position is available only in vehicles with a memory function.

The parking position makes parking easier.

The passenger outside mirror tilts downwards and shows the rear wheel on the front passenger side in the following situations:
- the parking position is stored (→ page 133)
- the passenger mirror is selected
- reverse gear is engaged

The passenger outside mirror moves back to its original position in the following situations:

- if you shift the transmission to another transmission position
- at speeds greater than 15 km/h
- if you press the button for the outside mirror on the driver's side

Storing the parking position of the passenger outside mirror using reverse gear

Storing

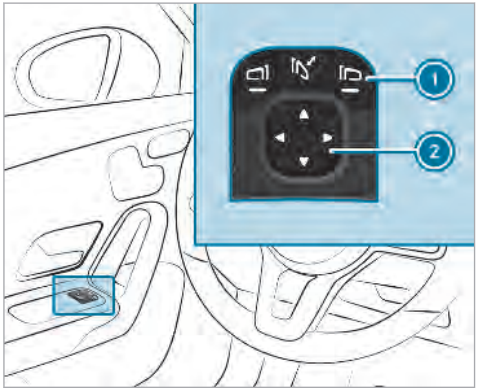

▶ Press button ① to select the passenger outside mirror.

▶ Engage reverse gear.

▶ Move the passenger outside mirror into the desired parking position using button ②.

Calling up

▶ Press button ① to select the passenger outside mirror.

▶ Engage reverse gear.
The passenger outside mirror moves to the stored parking position.

Activating/deactivating the automatic mirror folding function

Multimedia system:

→ ⌂ ▸▸ Settings ▸▸ Vehicle

▶ Activate or deactivate Auto. fold-in mirrors.

Operating the sun visors

Using the single sun visor

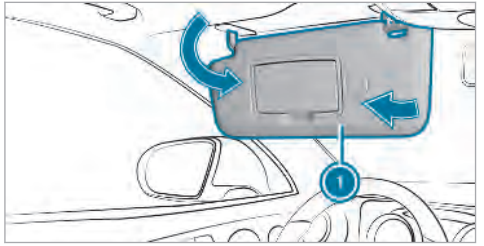

- **Glare from the front:** fold sun visor 1 down.
- **Glare from the side:** swing sun visor 1 to the side.

Overview of climate control systems

THERMATIC control panel overview

The indicator lamps in the buttons AUTO, , MAX, REAR, , A/C and indicate that the corresponding function is activated.

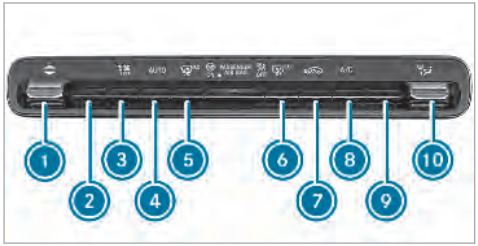

1. ▼▲ Sets the temperature
2. Button without function
3. OFF Sets the airflow or switches off climate control
4. AUTO Sets climate control to automatic mode (→ page 136)
5. MAX Demists the windscreen
6. REAR Switches the rear window heater on/off
7. Switches air-recirculation mode on/off (→ page 138)
8. A/C Switches the A/C function on/off (→ page 136)
9. Button without function
10. Sets the air distribution

THERMOTRONIC control panel overview

The indicator lamps in the buttons AUTO, MAX, REAR, , A/C REST, SYNC and indicate that the corresponding function is activated.

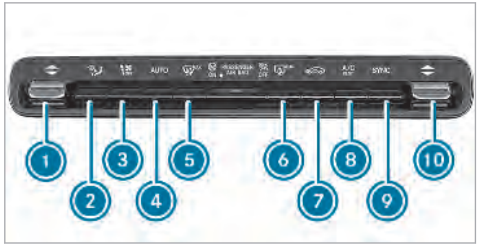

1. ▼▲ Sets the driver side temperature
2. Sets the air distribution
3. OFF Sets the airflow or switches off climate control
4. AUTO Sets climate control to automatic mode (→ page 136)
5. MAX Demists the windscreen
6. REAR Switches the rear window heater on/off
7. Switches air-recirculation mode on/off (→ page 138)
8. A/C REST Switches the A/C function on/off (→ page 136)

Switches the residual heat on/off (→ page 138)

⑨ SYNC Activates or deactivates synchronisation (→ page 137)

⑩ ▼▲ Sets the front passenger side temperature

Operating the climate control system

Switching climate control on/off

▶ **To switch on:** set the airflow to level 1 or higher using the button.

▶ **To switch off:** set the airflow to level 0 using the button.

ⓘ If climate control is switched off, the windows may mist up more quickly. Switch off climate control only briefly.

Activating/deactivating the A/C function via the control panel

The A/C function heats, cools and dehumidifies the vehicle's interior air.

▶ Press button A/C A/C REST .

Deactivate the A/C function only briefly otherwise the windows can mist up more quickly.

Condensation may drip from the underside of the vehicle when cooling mode is active. This is not a sign that there is a malfunction.

The compressor function is deactivated in the following cases:

- when driving uphill or downhill at a gradient of more than 35 %
- when driving in across an incline of more than 35 %

Calling up the air conditioning menu

Calling up the air conditioning menu using the multimedia system

▶ Select the temperature display at the bottom edge of the screen.

Calling up the air conditioning menu using the button on the control panel

▶ Press the button on the control panel.

ⓘ The button on the control panel is not available on all equipment variants. In this case, the air conditioning menu can only be called up using the multimedia system.

Activating/deactivating the A/C function using the multimedia system

The A/C function heats, cools and dehumidifies the vehicle's interior air.

▶ Calling up the air conditioning menu (→ page 136).

▶ Select A/C.
Depending on the previous status, the function is activated or deactivated.

Setting climate control to automatic mode

In automatic mode, the set temperature is controlled and maintained at a constant level by the air supply.

▶ Press the AUTO button.

▶ **To switch to manual mode:** press the or AUTO button.

In automatic mode, you can choose between five different air quantities using the [OFF] button. Automatic mode is retained.

Air distribution settings

The symbols on the display indicate which vents the airflow is being directed through:

- [ ] defroster and side air vents
- [ ] centre and side air vents
- [ ] footwell and side air vents
- [ ] centre, side and footwell vents
- [ ] defroster, footwell and side air vents
- [ ] all vents
- [ ] defroster, middle and side air vents
- [AUTO] automatic air distribution

Setting the air distribution

▶ Call up the air conditioning menu (→ page 136).

▶ **To set the air distribution:** select [ ], [ ] or [ ].

▶ Set the airflow.

ⓘ Several air distribution options can be selected at the same time, for example to set the temperature/air conditioning for the windscreen and the footwells simultaneously.

Activating/deactivating the climate control synchronisation function via the control panel

Climate control can be set centrally using the synchronisation function. The temperature and air distribution setting for the driver side is adopted automatically for the front passenger side.

▶ Press button [SYNC].

The synchronisation function is deactivated if the settings for one of the other climate zones are changed.

Activating/deactivating the climate control synchronisation function using the multimedia system

Climate control can be set centrally using the synchronisation function. The temperature setting is automatically adopted for all climate zones.

▶ Calling up the air conditioning menu (→ page 136).

▶ Select SYNC.
Depending on the previous status, the function is activated or deactivated.

Demisting the windows

Windows misted up on the inside

▶ Press the [AUTO] button.

▶ If the windows continue to mist up: press the [MAX] button.

Windows misted up on the outside

▶ Switch on the windscreen wipers.

▶ Press the [AUTO] button.

Switching air-recirculation mode on/off

▶ Press the button.
The interior air will be recirculated.

Air-recirculation mode automatically switches back to fresh-air mode after some time depending on the A/C function (air conditioning system is switched on or off).

ⓘ If air-recirculation mode is switched on, the windows may mist up more quickly. Switch on air-recirculation mode only briefly.

Switching the residual heat on/off

Requirements:
- The vehicle is parked.

It is possible to make use of the residual heat from the engine to continue heating or ventilating the front compartment of the vehicle for approximately 30 minutes.

▶ **To switch on:** press the A/C REST button.

Residual heat is switched off automatically.

Air vents

Adjusting the front air vents

⚠ **WARNING** - Risk of burns/frostbite due to not maintaining a sufficient distance to the air vents

Very hot or very cold air can flow from the air vents.

This could result in burns or frostbite in the immediate vicinity of the air vents.

▶ Always ensure that all vehicle occupants maintain a sufficient distance to the air vents.

▶ If necessary, redirect the airflow to another area of the vehicle interior.

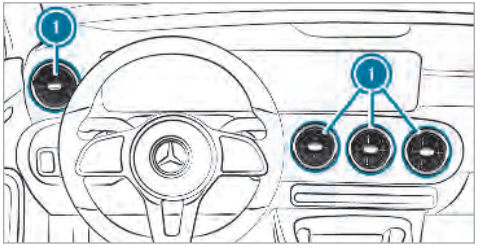

▶ **To open or close:** turn the centre of the air vent 1 to the left or right as far as it will go.

▶ **To adjust the air direction:** hold air vent 1 in the centre and move it up or down or to the left or right.

Adjusting the rear air vents

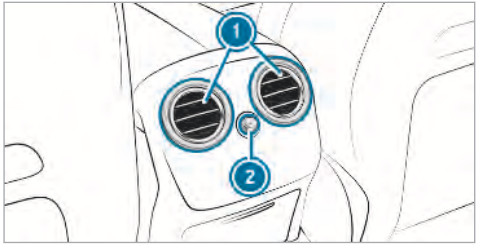

- **To open or close:** turn controller (2) to the left or right as far as it will go.
- **To adjust the air direction:** hold rear air vent (1) in the centre and move it up or down or to the left or right.

Driving

Switching on the power supply or ignition using the start/stop button

WARNING Risk of accident and injury due to children left unattended in the vehicle

If children are left unattended in the vehicle, they could:

- open doors, thereby endangering other persons or road users.
- get out of the vehicle and be hit by oncoming traffic.
- operate vehicle equipment and become trapped, for example.

In addition, children could also set the vehicle in motion, for example, by:

- releasing the parking brake.
- shifting the automatic transmission out of park position P or shifting manual transmission into idle position.
- starting the engine.

▶ Never leave children and animals unattended in the vehicle.

▶ When leaving the vehicle, always take the key with you and lock the vehicle. This also applies to the Digital Vehicle Key sticker and mobile phones if the "Digital Vehicle Key in the smartphone" function is activated via the Mercedes me connect web app.

▶ Keep the vehicle key out of reach of children. This also applies to the Digital Vehicle Key sticker and mobile phones if the "Digital Vehicle Key in the smartphone" function is activated via the Mercedes me connect web app.

WARNING Risk of exhaust gas poisoning

Combustion engines emit poisonous exhaust gases such as carbon monoxide. Inhaling these exhaust gases causes poisoning.

▶ Never leave the engine running in an enclosed space without sufficient ventilation.

WARNING Risk of fire caused by flammable material on the exhaust system

Flammable materials brought in by either animals or environmental influences may ignite if they come into contact with hot parts of the engine or exhaust system.

▶ Therefore, check regularly that there are no flammable materials in the engine compartment or on the exhaust system.

Requirements:

- the key is located in the vehicle and the key battery is not discharged.
- or an already activated Digital Vehicle Key sticker is located in the marked space (→ page 142).
- or the mobile phone is located in the marked space and the "Digital Vehicle Key" function

has been activated via the Mercedes me connect web app (→ page 142).

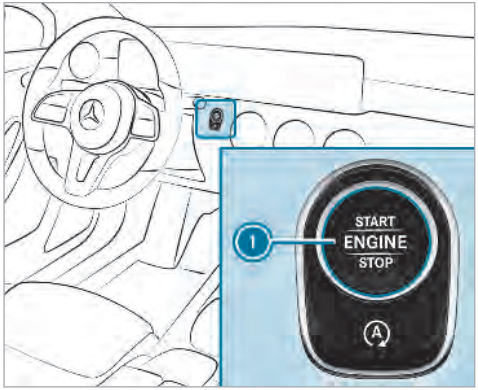

▶ **To switch on the power supply:** press button ① once.
You can activate the windscreen wiper, for example.

The power supply is switched off again if the following conditions are met:

- you open the driver's door.
- you press button ① twice.

▶ **To switch on the ignition:** press button ① twice.
The indicator lamps in the instrument cluster light up.

The ignition is switched off again if one of the following conditions is met:

- you do not start the vehicle within 15 minutes.

  The transmission is in position P.

  or

  The electric parking brake is applied.
- you press button ① once.

Starting the vehicle

Starting the vehicle with the start/stop button

Requirements:

- the key is located in the vehicle and the key battery is not discharged.
- or an already activated Digital Vehicle Key sticker is located in the marked space (→ page 142).
- or the mobile phone is located in the marked space and the "Digital Vehicle Key" function has been activated via the Mercedes me connect web app (→ page 142).

▶ **Vehicles with automatic transmission:** shift the transmission to position P or N.

▶ depress the brake pedal and press button ① once.

▶ If the vehicle does not start: switch off non-essential consumers and press button ① once.

If the vehicle still does not start, one of the following display messages appears in the multifunction display:

▶ Place the key in the marked space See Owner's Manual: start the vehicle in emergency operation mode (→ page 143).

or

▶ Key not detected Place smartphone in charging bracket: place the mobile phone in the marked space (→ page 114).

You can switch off the engine while driving by pressing button ① for about three seconds. Be sure to observe the safety notes under "Driving tips".

Starting vehicle with mobile phone or Digital Vehicle Key sticker

Requirements:

- the vehicle is equipped with the "Digital Vehicle Key" function and the service was activated.
- a Digital Vehicle Key sticker

or

- a suitable mobile phone with NFC aerial
  - the "Digital Vehicle Key" function is activated via the Mercedes me connect web app: http://www.mercedes.me.
  - **a sufficient charge level on the mobile phone.** On some mobile phones, the function is also available when the battery is discharged.

ⓘ You can check the suitability of your mobile phone by entering the phone number at http://www.mercedes.me.
Information about suitable mobile phones can be obtained from your Mercedes-Benz service centre or at http://www.mercedes-benz.com/connect.

ⓘ Mercedes-Benz recommends that you carry the emergency key in case of function restrictions.

ⓘ The function is only available in combination with Mercedes me connect and only in certain countries.

ⓘ Protective cases around the mobile phone can impair the range of functions.

▶ If necessary, make sure that the charge level of the mobile phone is sufficient. If necessary, charge the mobile phone before starting the journey.

Initial start

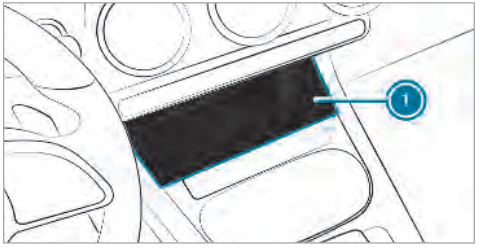

▶ Make sure that there is a valid vehicle key in the vehicle.

▶ Place the mobile phone or the Digital Vehicle Key sticker in the middle of the marked space ①.

▶ Depress the brake pedal and start the vehicle using the start/stop button.

ⓘ The key is not needed for any further starts.

Any further starts

- ▶ Place the mobile phone or the Digital Vehicle Key sticker in the middle of the marked space ① and leave it there during the journey.
- ▶ Depress the brake pedal and start the vehicle using the start/stop button.

The "Digital Vehicle Key" service can be deactivated in Mercedes me connect at http://www.mercedes.me. The function is then deactivated in the smartphone via an online connection. If connection to the Internet is not possible, e.g. after the mobile phone has been stolen, the key function can be deactivated at a Mercedes-Benz service centre.

Starting the vehicle in emergency operation mode

If the vehicle does not start and the Place the key in the marked space See Owner's Manual display message appears in the multifunction display, you can start the vehicle in emergency operation mode.

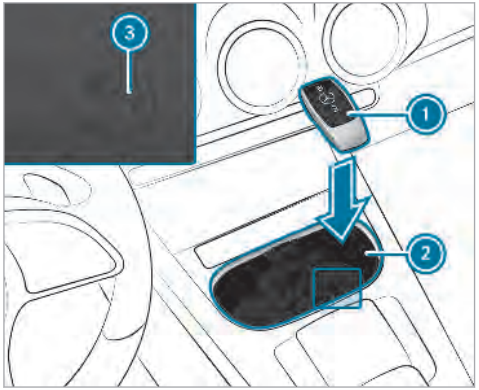

Marked space (example with cup holder without cover)

- ▶ Open the cover of marked space ② if necessary.
- ▶ Make sure that marked space ② is empty.
- ▶ Remove key ① from the key ring.
- ▶ Place key ① in marked space ② on the symbol ③.
  The vehicle will start after a short time.

  If you remove key ① from marked space ② the engine continues running. For further vehicle starts however, key ① must be located in marked space ② on symbol ③ during the entire journey.
- ▶ Have the key ① checked at a qualified specialist workshop.

If the vehicle does not start:

- ▶ place key ① in marked space ② and leave it there.
- ▶ depress the brake pedal.
- ▶ start the vehicle using the start/stop button.

ⓘ You can also switch on the power supply or the ignition with the start/stop button.

Starting the vehicle via Remote Online services

Cooling or heating the vehicle interior before starting a journey

ⓘ This function is not available in all countries.

If you start the vehicle via your smartphone, the previously selected air conditioning setting is active.

Ensure the following before starting the engine:

- the legal stipulations in the area where your vehicle is parked allow engine starting via smartphone.
- it is safe to start and run the engine where your vehicle is parked.
- the fuel tank is sufficiently filled.
- the starter battery is sufficiently charged.

ⓘ You can also set the temperature with your smartphone. Information on Mercedes me connect and other services: http://www.mercedes.me

Charging the battery before commencing your journey

ⓘ This function is not available in all countries.

- If the vehicle battery is discharged, you receive a message on your smartphone.
- You can then start the vehicle with the smartphone to charge the battery.
- The vehicle is automatically switched off after ten minutes.

Ensure the following before starting the engine:

- the legal stipulations in the area where your vehicle is parked allow engine starting via smartphone.
- it is safe to start and run the engine where your vehicle is parked.
- the fuel tank is sufficiently filled.

Starting the vehicle

⚠ **WARNING** Risk of crushing or entrapment due to unintentional starting of the engine

Limbs could be crushed or trapped if the engine is started unintentionally during service or maintenance work.

▶ Always secure the engine against unintentional starting before carrying out maintenance or repair work.

Requirements:

- park position P is selected.
- the anti-theft alarm system is not activated.
- the panic alarm is not activated.
- the hazard warning lights are switched off.
- the bonnet is closed.
- the doors are closed and locked.
- the windows and sliding sunroof are closed.

▶ Start the vehicle using the smartphone:

- after every vehicle start, the engine runs for ten minutes.
- you can carry out a maximum of two consecutive starting attempts. The vehicle must be started once with the key before trying to start the vehicle again with the smartphone.
- you can stop the vehicle again at any time.
- further information can be found in the smartphone app.

Securing the engine against starting before carrying out maintenance or repair work:

▶ switch on the hazard warning lights.

or

▶ unlock the doors.

or

▶ open a side window or the sliding sunroof.

Running-in notes

To preserve the engine during the first 1,500 km:

- drive at varying road speeds and engine speeds.
- drive in drive program **C** or **E**.
- change gear before the rev counter needle is ⅔ of the way to the red area of the rev counter.
- do not shift down a gear manually in order to brake.
- avoid overstraining the vehicle, e.g. driving at full throttle.
- **vehicles with automatic transmission:** do not depress the accelerator pedal beyond the pressure point (kickdown).
- only increase the engine speed gradually and accelerate the vehicle to full speed after 1,500 km.

This also applies when the engine or parts of the drivetrain have been replaced.

Please also observe the following running-in notes:

- In certain driving and driving safety systems, the sensors adjust automatically while a certain distance is driven after the vehicle has been delivered or after repairs. Full system effectiveness is not achieved until the end of this teach-in process.
- Brake linings, brake discs and tyres that are either new or have been replaced only achieve optimum braking effect and grip after several hundred kilometres of driving. Compensate for the reduced braking effect by applying greater force to the brake pedal.

Notes on driving

⚠ **WARNING** Risk of accident due to objects in the driver's footwell

Objects in the driver's footwell may impede pedal travel or block a depressed pedal.

This jeopardises the operating and road safety of the vehicle.

▶ Stow all objects in the vehicle securely so that they cannot get into the driver's footwell.

▶ Always fit the floor mats securely and as prescribed in order to ensure that

there is always sufficient room for the pedals.

▶ Do not use loose floor mats and do not place floor mats on top of one another.

⚠ WARNING Risk of accident due to unsuitable footwear

Operating the pedals may be impaired by wearing unsuitable footwear, e.g.:

- platform shoes
- high-heeled shoes
- slippers

▶ Always wear suitable footwear when driving so that you can operate the pedals safely.

⚠ WARNING Risk of accident when switching off the ignition when driving

If you switch off the ignition while driving, safety functions are restricted or no longer available. This may affect the power steering system and the brake force boosting, for example.

You will then need to use considerably more force to steer and brake.

▶ Do not switch off the ignition while driving.

⚠ WARNING Risk of exhaust gas poisoning

Combustion engines emit poisonous exhaust gases such as carbon monoxide. Inhaling these exhaust gases causes poisoning.

▶ Never leave the engine running in an enclosed space without sufficient ventilation.

⚠ WARNING Risk of skidding and of an accident due to shifting down on slippery road surfaces

If you shift down on slippery road surfaces to increase the engine braking effect, the drive wheels may lose traction.

▶ Do not shift down on slippery road surfaces to increase the engine braking effect.

⚠ DANGER Risk of fatal injuries due to poisonous exhaust gases

If the tailpipe is blocked or sufficient ventilation is not possible, poisonous exhaust gases such as carbon monoxide may enter the vehicle. This is the case, for example, if the vehicle is stuck in snow.

▶ When the engine or the stationary heater are running, keep the tailpipe and the area around the vehicle clear of snow.

▶ Open a window on the side of the vehicle facing the wind to ensure an adequate supply of fresh air.

WARNING Risk of accident due to the brake system overheating

If you leave your foot on the brake pedal when driving, the brake system may overheat.

This increases the braking distance and the brake system may even fail.

- Never use the brake pedal as a footrest.
- Do not depress the brake pedal and the accelerator pedal at the same time while driving.

NOTE Causing wear to the brake linings by permanently depressing the brake pedal

- Do not permanently depress the brake pedal while driving.
- To use braking effect of the engine, shift to a lower gear in good time.

NOTE Damage to the drivetrain and engine when pulling away

- Do not warm up the engine when stationary. Pull away immediately.
- Avoid high engine speeds and full throttle until the engine has reached its operating temperature.
- Do not allow the wheels to spin.

NOTE Damage to the catalytic converter due to non-combusted fuel

The engine is not running smoothly and is misfiring.

Non-combusted fuel may get into the catalytic converter.

- Only depress the accelerator pedal slightly.
- Have the cause rectified immediately at a qualified specialist workshop.

Limited braking effect on salt-treated roads:

- due to salt build-up on the brake discs and brakepads, the braking distance can increase considerably or result in braking only on one side.
- maintain a much greater safe distance to the vehicle in front.

To prevent salt build-up:

- brake occasionally while paying attention to the traffic conditions.
- carefully depress the brake pedal at the end of the journey and when starting the next journey.

ECO start/stop function

Operation of the ECO start/stop function

The engine is automatically switched off if the following conditions are met:

- you brake the vehicle to a standstill in transmission position D or N.
- if all vehicle conditions for an automatic engine stop are met.

The [Ⓐ] symbol appears in the multifunction display when the vehicle is stationary. If not all the vehicle conditions are met, the [Ⓐ] symbol appears in the multifunction display.

The engine is restarted automatically if:

- you release the brake pedal in transmission position [D] when the HOLD function is not active.
- you shift from transmission position [P].
- you engage transmission position [D] or [R].
- you depress the accelerator pedal.
- you change the vehicle level.
- an automatic engine start is necessary.

If the engine was switched off by the ECO start/stop function and you leave the vehicle, a warning tone sounds. The Vehicle is operational Switch off the ignition before exiting display message also appears in the multifunction display. If you do not switch off the ignition, the ignition is automatically switched off after one minute.

Switching the ECO start/stop function off/on

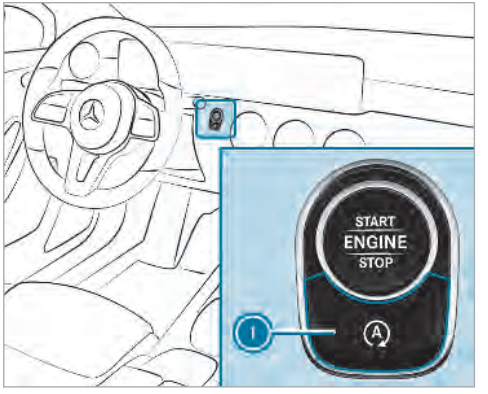

▶ Press button ①.
A display appears in the instrument cluster when switching the ECO start/stop function off/on.

ⓘ A continuous display appears in the instrument cluster while the ECO start/stop function is deactivated.

Function of the ECO display

The ECO display summarises the driving style from the start of the journey to its completion and assists you in achieving the most economical driving style.

You can influence consumption if you:

- drive with particular care
- drive the vehicle in drive program **E**
- observe the gearshift recommendations

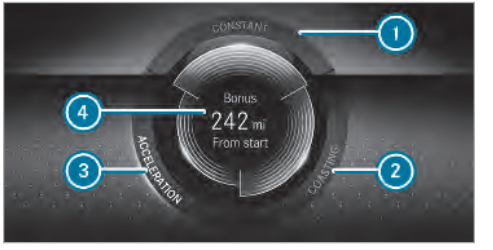

The lettering in the segment lights up brightly, the outer edge lights up and the segment fills up in the following situations:

- ① steady speed

- ② gentle deceleration and rolling
- ③ moderate acceleration

The lettering in the segment is grey, the outer edge is dark and the segment empties in the following situations

- ① fluctuations in speed
- ② heavy braking
- ③ sporty acceleration

You have driven economically when:

- the three segments are fill up completely at the same time
- the edge around all three segments lights up

The additional range achieved as a result of your driving style in comparison to a driver with a very sporty driving style is shown in the centre of the display ④. The range displayed does not indicate a fixed reduction in consumption.

DYNAMIC SELECT switch

Function of the DYNAMIC SELECT switch

Use the DYNAMIC SELECT switch to change between the following drive programs:

- **I (Individual):** individual settings
- **S (Sport):** sporty driving style
- **C (Comfort):** comfortable and economical driving style
- **E (Eco):** particularly economical driving style

Depending on the drive program selected, the following vehicle characteristics will change:

- drive
  - engine and transmission management
  - Active Distance Assist DISTRONIC
- ESP®
- **Vehicles with DYNAMIC BODY CONTROL:** suspension
- steering

Selecting the drive program

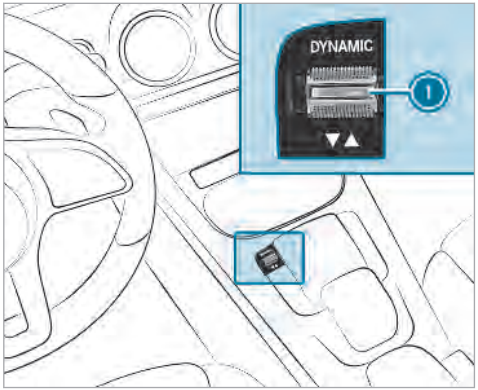

▶ Press DYNAMIC SELECT switch ① forwards or backwards.
The drive program selected appears in the multifunction display.

Configuring DYNAMIC SELECT (multimedia system)

Multimedia system:

→ ⌂ ▸▸ Settings ▸▸ DYNAMIC SELECT

Setting drive program I

- ▶ Select Individual config..
- ▶ Select and set a category.

Restoring the last drive program

- ▶ Select Restore settings.
  When the function is active, a prompt appears after the vehicle is started to ask if the last drive program set should be restored. If this function is not active, the Comfort drive program will be set automatically when the vehicle is started.
- ▶ Activate or deactivate the function.

Displaying vehicle data

Multimedia system:

→ ⌂ ▸▸ Vehicle info

- ▶ Select Vehicle.
  The vehicle data is displayed.

Displaying engine data

Multimedia system:

→ ⌂ ▸▸ Vehicle info

- ▶ Select Engine.
  The engine data is displayed.

ⓘ The values for engine output and engine torque may deviate from the nominal values.

Items that can influence this are, for example:

- Engine speed
- Sea level
- Fuel grade
- Outside temperature

Calling up fuel consumption indicator

Multimedia system:

→ ⌂ ▸▸ Vehicle info

- ▶ Select Consumption.
  A display with current and average consumption figures is shown.

Automatic transmission

DIRECT SELECT lever

Function of the DIRECT SELECT lever

⚠ **WARNING** Risk of accident and injury due to children left unattended in the vehicle

If children are left unattended in the vehicle, they could:

- Open doors, thereby endangering other persons or road users.
- Get out of the vehicle and be hit by oncoming traffic.

- Operate vehicle equipment.

Moreover, children could also set the vehicle in motion by, for example:

- Releasing the parking brake.
- Shifting the transmission out of park position [P].
- Starting the engine.

▶ Never leave children and animals unattended in the vehicle.

▶ When leaving the vehicle, always take the key with you and lock the vehicle. This also applies to mobile phones if the "Digital Car Key in the smartphone" function is activated via the Mercedes me connect web app.

▶ Keep the keys out of the reach of children. This also applies to mobile phones if the "Digital Car Key in the smartphone" function is activated via the Mercedes me connect web app.

⚠ **WARNING** Risk of accident due to incorrect gearshifting

If the engine speed is higher than the idle speed and you engage the transmission position [D] or [R], the vehicle may accelerate sharply.

▶ If you engage the transmission position [D] or [R] always depress the brake pedal firmly and do not accelerate at the same time.

Use the DIRECT SELECT lever to shift the transmission position. The current transmission position is displayed in the multifunction display.

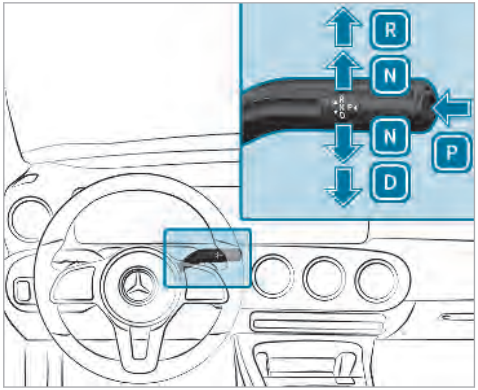

[P] Park position
[R] Reverse gear
[N] Neutral
[D] Drive position

Engaging reverse gear R

▶ Depress the brake pedal and push the DIRECT SELECT lever up past the first point of resistance.
The transmission position display shows R in the multifunction display.

Engaging idle N

▶ Depress the brake pedal and push the DIRECT SELECT lever up or down to the first point of resistance.
The transmission position display shows N in the multifunction display.

Subsequently releasing the brake pedal will allow you to move the vehicle freely, e.g. to push it or tow it away.

If you want the automatic transmission to remain in idle N even if the ignition is switched off:

▶ Start the vehicle.

▶ depress the brake pedal and shift to idle N.

▶ release the brake pedal.

▶ switch off the ignition.

ⓘ if you then exit the vehicle leaving the key in the vehicle, the automatic transmission remains in idle N.

Engaging park position P

▶ Press button P.
The transmission position display shows P in the multifunction display.

Park position P is engaged automatically if one of the following conditions is met:

- you switch the engine off with the transmission in position D or R.
- you open the driver's door when the vehicle is at a standstill or when driving at a very low speed and the transmission is in position D or R.

ⓘ At very low outside temperatures from approx. -20 °C you may not be able to shift the transmission from P to another transmission position when the engine is switched off. If this is the case, only change the transmission position while the engine is running.

Engaging drive position D

▶ Depress the brake pedal and push the DIRECT SELECT lever down past the first point of resistance.
The transmission position display shows D in the multifunction display.

When the automatic transmission is in transmission position D, it shifts the gears automatically. This depends on the following factors:

- the selected drive program
- the position of the accelerator pedal
- the driving speed

Manual gearshifting

⚠ **WARNING** Risk of skidding and of an accident due to shifting down on slippery road surfaces

If you shift down on slippery road surfaces to increase the engine braking effect, the drive wheels may lose traction.

▶ Do not shift down on slippery road surfaces to increase the engine braking effect.

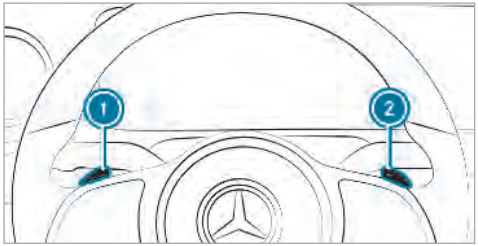

▶ **To activate:** pull steering wheel gearshift paddle ① or ②.
Manual gearshifting is activated for a short time. The current gear is displayed in the multifunction display.

ⓘ How long manual gearshifting is activated for depends on your driving style.

▶ **To shift up:** pull steering wheel gearshift paddle ②.

▶ **To shift down:** pull steering wheel gearshift paddle ①.
If you pull and hold the steering wheel gearshift paddle ①, the transmission shifts to the lowest possible gear.

▶ **To deactivate:** pull steering wheel gearshift paddle ② and hold it in place.
The transmission position D appears in the multifunction display.

ⓘ If you select the **Manual** drive setting in drive program **I**, manual gearshifting is permanently activated.

Gearshift recommendation

The gearshift recommendation assists you in adopting an economical driving style.

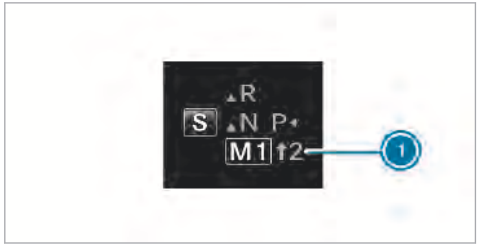

▶ If gearshift recommendation message ① is shown on the multifunction display, shift to the recommended gear.

Using kickdown

▶ **Maximum acceleration:** depress the accelerator pedal beyond the pressure point.

During kickdown, you cannot shift gears using the steering wheel gearshift paddles. The automatic transmission shifts up to the next gear when the maximum engine speed is reached to protect the engine from overrevving.

Glide mode function

With an anticipatory driving style, glide mode helps you to reduce fuel consumption.

Glide mode is characterised by the following:

- the combustion engine is disconnected from the drivetrain and the vehicle continues to roll in neutral.
- the transmission position D is displayed in green in the multifunction display.

Glide mode is activated if the following conditions are met:

- drive program **E** is selected.
- the speed is within a suitable range.
- the road's course is suitable, e.g. no steep uphill or downhill inclines or tight bends.
- there is no trailer coupled to the trailer hitch, and no bicycle rack fitted.
- you are no longer depressing the accelerator or brake pedal.

ⓘ Glide mode can also be activated if you have selected the "Eco" setting for the drive when in drive program **I**.

Glide mode is deactivated again if one of the conditions is no longer met.

Vehicles with Driving Assistance Package, Active Distance Assist DISTRONIC or Active Brake Assist: glide mode is also deactivated depending on the traffic situation and the vehicle then switches to overrun mode.

Glide mode can also be prevented by the following parameters:

- incline
- downhill gradient
- temperature
- height
- speed
- operating status of the engine

ⓘ Glide mode can be deactivated by actuating the right-hand steering wheel gearshift paddle (→ page 152).

Refuelling

Refuelling the vehicle

⚠ **WARNING** Risk of fire or explosion from fuel

Fuels are highly flammable.

▶ Fire, naked flames, smoking and creating sparks must be avoided.

▶ Switch off the ignition and, if it has been in use, switch off the stationary heater before you refuel your vehicle.

⚠ **WARNING** Risk of injury from fuel

Fuels are poisonous and harmful to your health

▶ Do not swallow fuel or let it come into contact with skin, eyes or clothing.

▶ Do not inhale fuel vapour.

▶ Keep children away from fuel.

If you or other people come into contact with fuel, observe the following:

- Immediately rinse fuel off your skin with soap and water.
- If fuel comes into contact with your eyes, immediately rinse them thoroughly with clean water. Seek medical attention immediately.
- If you swallow fuel, seek medical attention immediately. Do not induce vomiting.
- Change immediately out of clothing that has come into contact with fuel.

WARNING Risk of fire and explosion due to electrostatic charge

Electrostatic charge can cause sparks and thereby ignite fuel vapours.

- Touch the metal vehicle body before opening the fuel filler cap or touching the pump nozzle.

This discharges any electrostatic charge that may have built up.

WARNING Risk of fire from fuel mixture

Vehicles with a diesel engine:

If you mix diesel fuel with petrol, the flash point of the fuel mixture is lower than that of pure diesel fuel.

While the engine is running, component parts in the exhaust system may overheat without warning.

- Never refuel using petrol.
- Never mix petrol with diesel fuel.

NOTE Damage caused by the wrong fuel

Vehicles with a petrol engine:

even small amounts of the wrong fuel could result in damage to the fuel system, the engine and the emission control system.

- Only refuel using unleaded fuel that conforms to EN 228, or an equivalent specification.
- The RON requirement is located in the fuel filler flap.

Fuel of this specification may contain up to 10 % ethanol. Your vehicle is suitable for use with E10 fuel.

Do not refuel using the following fuels:

- diesel
- E85, E100
- petrol containing methanol (M15, M30, M85, M100)
- petrol with additives containing metal

If you accidentally refuel with the wrong fuel:

- do not switch the ignition on.
- consult a qualified specialist workshop.

NOTE Damage caused by the wrong fuel

Vehicles with a diesel engine:

even small amounts of the wrong fuel could result in damage to the fuel system, the engine and the emission control system.

▶ Only refuel using diesel fuel that conforms to EN 590, or an equivalent specification.

▶ **Vehicles with diesel particulate filters:** in countries outside the EU, only use low-sulphur Euro diesel with a sulphur content of under 50 ppm.

Do not refuel using the following fuels:

- petrol
- marine diesel
- heating oil
- bio-diesel
- vegetable oil
- paraffin
- kerosene

If you accidentally refuel with the wrong fuel:

▶ do not switch the ignition on.

▶ consult a qualified specialist workshop.

! **NOTE** Do not use diesel to refuel vehicles with a petrol engine.

If you accidentally refuel with the wrong fuel:

- Do not switch on the ignition. Otherwise fuel can enter the engine.

  Even small amounts of the wrong fuel could result in damage to the fuel system and the engine. The repair costs are high.

▶ Contact a qualified specialist workshop.

▶ Have the fuel tank and fuel lines drained completely.

! **NOTE** Do not use petrol to refuel vehicles with a diesel engine.

If you accidentally refuel with the wrong fuel:

- Do not switch on the ignition. Otherwise, fuel can enter the fuel system.

  Even small amounts of the wrong fuel could result in damage to the fuel system and the engine. The repair costs are high.

▶ Contact a qualified specialist workshop.

▶ Have the fuel tank and fuel lines drained completely.

! **NOTE** Damage to the fuel system caused by overfilled fuel tanks.

▶ Only fill the fuel tank until the fuel pump nozzle switches off.

If you have added too much fuel because of a defective filling pump:

▶ do not switch the ignition on.

▶ consult a qualified specialist workshop.

! **NOTE** Fuel may spray out when you remove the fuel pump nozzle.

▶ Only fill the fuel tank until the pump nozzle switches off.

Requirements:

- unlock the vehicle.

ⓘ Do not get into the vehicle again during the refuelling process. Otherwise, electrostatic charge could build up again.

Observe the notes on operating fluids (→ page 433).

Refuelling

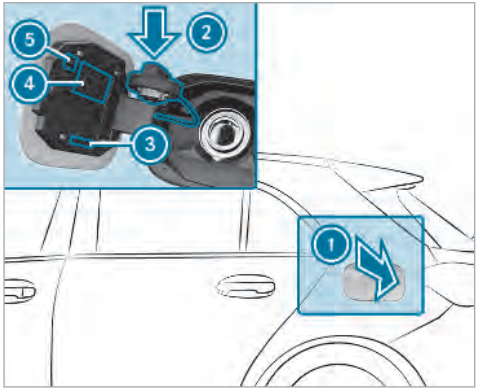

① Fuel filler flap
② Bracket for the fuel filler cap
③ Fuel type
④ Tyre pressure table
⑤ QR code for rescue card

▶ Press on the back area of the fuel filler flap ①.
▶ Turn the fuel filler cap anti-clockwise and remove it.
▶ Insert the fuel filler cap into bracket ②.
▶ Completely insert the pump nozzle into the tank filler neck, hook in place and refuel.
▶ Only fill the fuel tank until the pump nozzle switches off.

ⓘ **Vehicles with a diesel engine:** the filler neck is designed for refuelling at diesel filling pumps.

ⓘ **Vehicles with a diesel engine:** when the fuel tank is completely empty, top up with at least 5 l of diesel.

ⓘ **Vehicles with a diesel engine:** use a filler neck with a large diameter for vehicles with a diesel engine when topping up fuel from a fuel can. Otherwise the filler neck cannot slide into the tank.

AdBlue® (diesel engine vehicles only)

Notes on AdBlue®

! **NOTE** When you open the AdBlue® tank, small amounts of ammonia vapour may escape.

▶ Only fill the AdBlue® tank in well-ventilated areas.
▶ Do not let AdBlue® come into contact with skin, eyes or clothes.
▶ Keep AdBlue® away from children.

! **NOTE** Do not ingest AdBlue®.

If AdBlue® is swallowed:

▶ Immediately rinse out your mouth thoroughly.
▶ Drink plenty of water.

▶ Seek medical attention immediately.

Please also observe the notes on service products and fuels (→ page 433).

AdBlue® is a fluid urea solution for exhaust gas aftertreatment of diesel engines. In order for the exhaust gas aftertreatment to function properly, only use AdBlue® in accordance with ISO 22241.

AdBlue® is characterised by the following:

- non-toxic
- colourless and odourless
- non-flammable

AdBlue® availability:

- AdBlue® may be topped up by fast service at a qualified specialist workshop, e.g. a Mercedes-Benz Service Centre.
- AdBlue® is available at many filling stations from AdBlue® filling pumps.
- Alternatively, AdBlue® is available at qualified specialist workshops, e.g. Mercedes-Benz Service Centres, and at many filling stations in AdBlue® refill canisters or AdBlue® refill bottles.

ⓘ Ensure the connection between the refill container and vehicle filler neck does not drip.

Topping up AdBlue®

! **NOTE** Engine damage due to AdBlue® in the fuel

▶ AdBlue® must not be used to fill the fuel tank.

▶ Only use AdBlue® to fill the AdBlue® tank.

▶ Do not overfill the AdBlue® tank.

! **NOTE** Contamination of the vehicle interior due to AdBlue® leakage

▶ After topping up, carefully close the AdBlue® refill container.

▶ Avoid carrying AdBlue® refill containers permanently in the vehicle.

Requirements

- Unlock the vehicle.

The following messages appear in order in the multifunction display when the AdBlue® tank requires refilling:

- Refill AdBlue See Owner's Manual. The AdBlue® tank is down to the reserve level.
- Refill AdBlue No start in XXX miles. You can only drive the vehicle over the distance shown. Refill AdBlue® as soon as possible.
- Refill AdBlue Eng. start not possible. The vehicle can no longer be started.

Opening the AdBlue® fuel filler cap

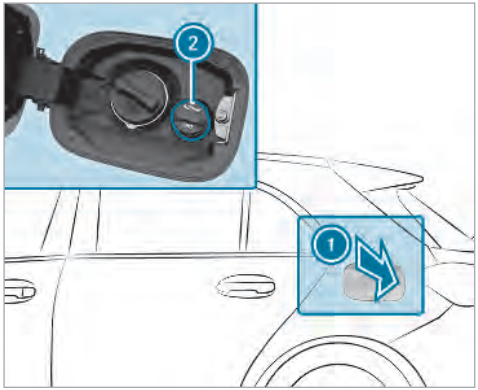

- Press on the back area of the fuel filler flap (1).
- Turn AdBlue® fuel filler cap (2) anti-clockwise and remove it.

ⓘ You can also store the AdBlue® fuel filler cap in the fuel filler cap holder in the in the fuel filler flap hinge arm.

Preparing the AdBlue® refill canister

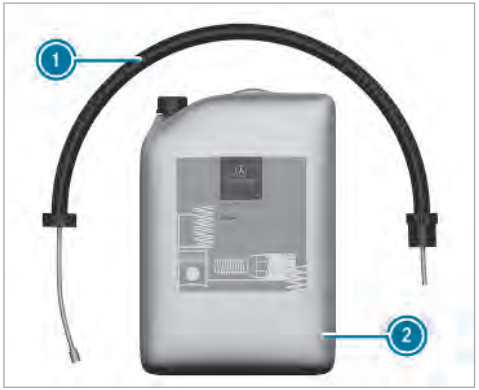

- Screw on the fastener of AdBlue® refill canister (2).
- Screw disposable hose (1) onto the opening of AdBlue® refill canister (2) until hand-tight.

Topping up AdBlue®

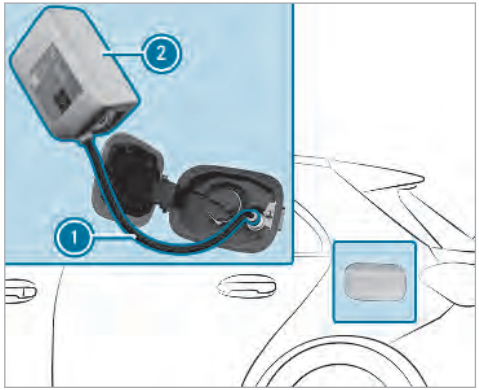

- Screw disposable hose (1) onto the filler neck of the vehicle until hand-tight.
- Lift up and tip AdBlue® refill canister (2). The filling process stops when the AdBlue® tank is completely full.

  AdBlue® refill canister (2) can be removed when it has been only partially emptied.

▶ Unscrew and close disposable hose ① and AdBlue® refill canister ② in reverse order.

▶ Switch on the ignition for at least 60 seconds.

ⓘ If the vehicle could not be started as the AdBlue® container was empty, it can take up to 60 seconds for the refill to be detected.

▶ Start the vehicle.

ⓘ Avoid storing AdBlue® refill containers permanently in the vehicle.

Parking

Parking the vehicle

⚠ **WARNING** Risk of fire caused by hot exhaust system parts

Flammable material such as leaves, grass or twigs may ignite if they come into contact with hot parts of the exhaust system or exhaust gas flow.

▶ Park the vehicle so that no flammable material can come into contact with hot vehicle components.

▶ In particular, do not park on dry grassland or harvested grain fields.

⚠ **WARNING** Risk of accident and injury due to children left unattended in the vehicle

If you leave children unattended in the vehicle, they may be able to set the vehicle in motion, for example by:

- Releasing the parking brake.
- Shifting the automatic transmission out of park position P.
- Starting the engine.

In addition, they may operate vehicle equipment and become trapped.

▶ Never leave children unattended in the vehicle.

▶ When leaving the vehicle, always take the key with you and lock the vehicle.

! **NOTE** Damage to the vehicle due to it rolling away

▶ Always secure the vehicle against rolling away.

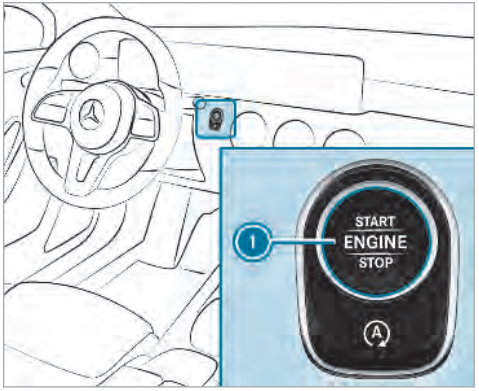

① Start/stop button

▶ On uphill or downhill gradients, turn the front wheels towards the kerb.

- apply the electric parking brake.
- select transmission position P.
- switch off the ignition.
- lock the vehicle.

ⓘ When you park the vehicle, you can still operate the side windows and the panoramic sliding sunroof for approximately five minutes when the driver's door is closed.

Garage door opener

Programming buttons for the garage door opener

⚠ **WARNING** Risk of exhaust gas poisoning

Combustion engines emit poisonous exhaust gases such as carbon monoxide. Inhaling these exhaust gases causes poisoning.

- Never leave the engine running in an enclosed space without sufficient ventilation.

⚠ **WARNING** Risk of injury and entrapment when opening the garage door using the garage door opener

When you operate or program the garage door with the integrated garage door opener, persons in the range of movement of the garage door can become trapped or struck by the garage door.

- When using the integrated garage door opener, always make sure that nobody is within the sweep of the garage door.

Requirements:

- The vehicle is parked outside of the garage.
- The engine is switched off.

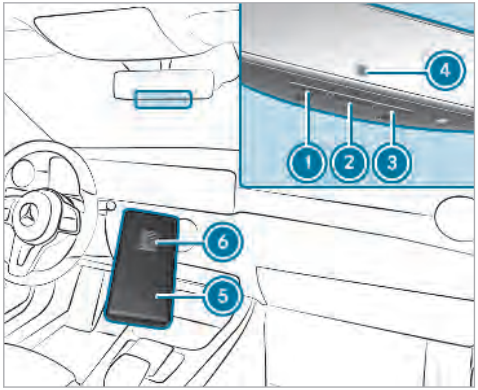

- Press and hold button 1, 2 or 3 that you wish to program.
  Indicator lamp 4 flashes yellow.

ⓘ It can take up to 20 seconds before the indicator lamp flashes yellow.

- Release the previously pressed button.
  Indicator lamp 4 continues to flash yellow.

▶ Point remote control ⑤ at a distance of 1 cm to 8 cm towards buttons ①, ② or ③.

▶ Press and hold button ⑥ of remote control ⑤ until:
- Indicator lamp ④ lights up green continuously. Programming is complete.
- Indicator lamp ④ flashes green. Programming was successful. Additionally, synchronisation of the rolling code with the garage door system must also be carried out.

▶ If indicator lamp ④ does not light up or flash green: repeat the procedure.

▶ Release all of the buttons.

ⓘ The remote control for the garage door drive is not included in the scope of delivery of the garage door opener.

Synchronising the rolling code

Requirements:
- The garage door system uses a rolling code.
- The vehicle must be within range of the garage door or exterior gate drive.
- The vehicle as well as persons and objects, are located outside the sweep of the garage door.

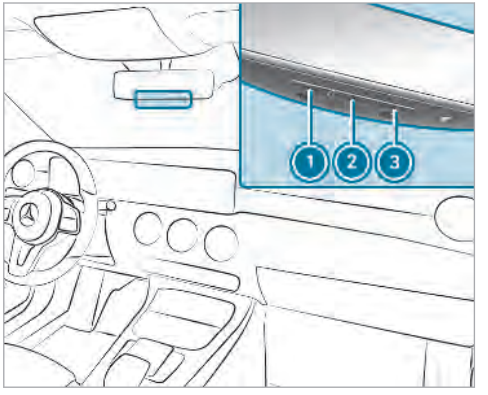

▶ Press the programming button on the door drive unit.
Initiate the next step within approximately 30 seconds.

▶ Press previously programmed button ①, ② or ③ repeatedly, until the door closes. When the door closes, programming is completed.

ⓘ Please also read the operating instructions for the garage door drive.

Troubleshooting when programming the remote control

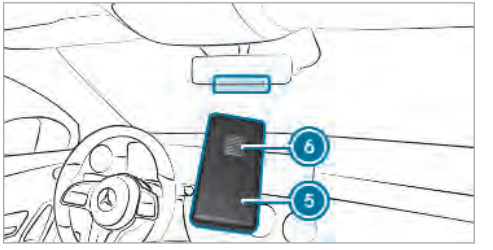

▶ Check if the transmitter frequency of remote control ⑤ is supported.

▶ Replace the batteries in remote control ⑤.

▶ Hold remote control ⑤ at various angles at a distance between 1 cm to 8 cm in front of

the inside rearview mirror. You should test every position for at least 25 seconds before trying another position.

▶ Hold remote control ⑤ at the same angles at various distances in front of the inside rear view mirror. You should test every position for at least 25 seconds before trying another position.

▶ Note that some remote controls transmit only for a limited period, press button ⑥ on remote control ⑤ again before transmission ends.

▶ Align the aerial line of the garage door opener unit with the remote control.

ⓘ Support and additional information on programming:

- On the HomeLink® Hotline on (0) 08000 466 354 65 or +49 (0) 6838 907-277.
- On the Internet at http://www.homelink.com.

Opening/closing the garage door

Requirements:

- The corresponding button is programmed to operate the garage door.

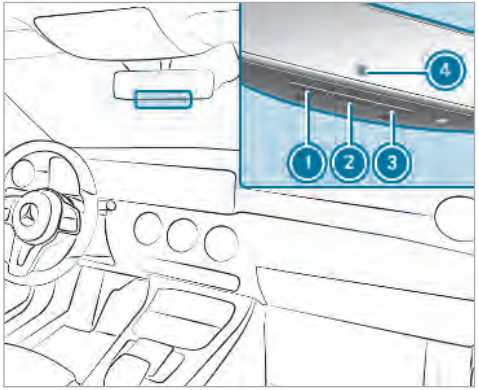

▶ Press and hold buttons ①, ② or ③ until the garage door opens or closes.

▶ If indicator lamp ④ flashes yellow after approximately 20 seconds: press and hold the previously pressed button again until the garage door opens or closes.

Clearing the garage door opener memory

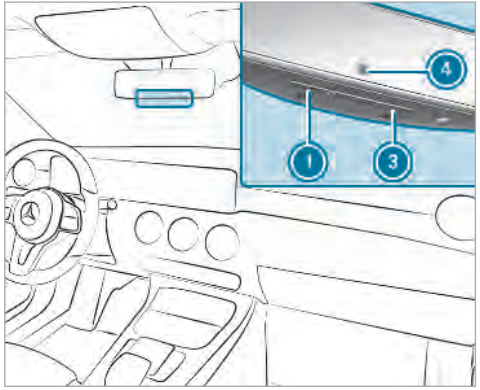

▶ Press and hold buttons ① and ③. Indicator lamp ④ lights up yellow.

▶ If indicator lamp ④ flashes green: release buttons ① and ③.

Radio equipment approval numbers for the garage door opener

Radio equipment approval numbers

Country	Radio equipment approval number
Egypt	TAC.2511151293.WIR
Andorra	CE
Australia	R-NZ
Barbados	MED1578
Chile	2488/DFRS20576/F-74
European Union	CE
Gibraltar	CE
Iceland	CE
Jordan	TRC/LPD/2015/299
Canada	IC: 4112A-MUAHL5
Kuwait	CE
Liechtenstein	CE
Mexico	RCPGEMU15-0448
Monaco	CE
New Zealand	R-NZ
Norway	CE
Russian Federation	not required
Saudi Arabia	TA 10525
Switzerland	CE
South Africa	ICASA TA-2015/1386
Turkey	not required
United Arab Emirates	ER41849/15 Dealer No: DA35176/14
United States	FCC ID: NZLMUAHL5

Brazil

Este equipamento opera em caráter secundário, isto é, não tem direito à proteção contra interferência prejudicial, mesmo de estações do mesmo tipo, e não pode causar interferência a sistemas operando em caráter primário.

Para maiores informações acessar www.anatel.gov.br

Further information on the declaration of conformity for wireless vehicle components (→ page 23).

Electric parking brake

Electric parking brake function (applying automatically)

⚠ **WARNING** Risk of accident and injury due to children left unattended in the vehicle

If you leave children unattended in the vehicle, they may be able to set the vehicle in motion, for example by:

- Releasing the parking brake.
- Shifting the automatic transmission out of park position P or shifting the manual transmission into neutral.
- Starting the engine.

In addition, they may operate vehicle equipment.

▶ Never leave children and animals unattended in the vehicle.

▶ When leaving the vehicle, always take the key with you and lock the vehicle. This also applies to mobile phones if the "Digital Car Key in the smartphone" function is activated via the Mercedes connect me web app.

The electric parking brake is applied if the transmission is in position P and one of the following conditions is fulfilled:

- The engine is switched off.
- The seat belt tongue is not inserted in the seat belt buckle of the driver's seat and the driver's door is opened.

ⓘ To prevent application: pull the handle of the electric parking brake.

In the following situations, the electric parking brake is also engaged:

- The Active Distance Assistant DISTRONIC is bringing the vehicle to a standstill.
- The HOLD function is keeping the vehicle stationary.
- Active Parking Assist is keeping the vehicle stationary.

This is only the case if one of the following conditions is also fulfilled:

- The engine is switched off.
- The seat belt tongue is not inserted in the seat belt buckle of the driver's seat and the driver's door is opened.
- There is a system malfunction.
- The power supply is insufficient.
- The vehicle is stationary for a lengthy period.

When the electric parking brake is applied, the Ⓟ indicator lamp lights up in the instrument cluster.

The electric parking brake is not automatically applied if the engine is switched off by the ECO start/stop function.

Electric parking brake function (releasing automatically)

The electric parking brake is released when the following conditions are fulfilled:

- The engine is running.
- The seat belt tongue is inserted into the seat belt buckle of the driver's seat.
- The transmission is in position D or R and you depress the accelerator pedal or you shift from transmission position P to D or R.
- If the transmission is in position R, the boot lid must be closed.

If the seat belt tongue is not inserted into the seat belt buckle of the driver's seat, the following conditions must be fulfilled:

- The driver's door is closed.
- You move the transmission out of transmission position P or you have previously driven faster than 3 km/h.
- If the transmission is in position R, the boot lid must be closed.

If the electric parking brake is released, the Ⓟ indicator lamp in the instrument cluster goes out.

Applying or releasing the electric parking brake manually

Applying

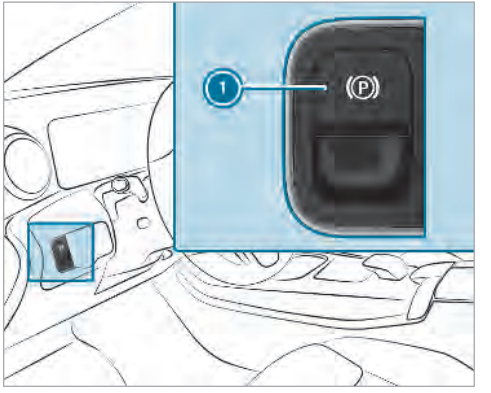

▶ Push handle ①.
The red Ⓟ indicator lamp appears in the instrument cluster.

ⓘ The electric parking brake is only securely applied if the indicator lamp is lit continuously.

Releasing

▶ Switch the ignition on.

▶ Pull handle ①.
The red Ⓟ indicator lamp in the instrument cluster goes out.

Emergency braking

▶ Press and hold handle ①.
When the vehicle has been braked to a standstill, the electric parking brake is applied. The Ⓟ indicator lamp appears in the instrument cluster.

Information on detecting damage on a parked vehicle

If a collision is detected when the tow-away protection is activated on a locked vehicle, you will receive notification:

- On your smartphone.
- In the multimedia system when you switch on the ignition.

You will receive information about the following points:

- The area of the vehicle that may have been damaged.
- The force of the impact.

The following situations can lead to inadvertent activation:

- The parked vehicle is moved, e.g. in a two-storey garage.

ⓘ Deactivate tow-away protection in order to prevent inadvertent activation. If you deactivate tow-away protection, damage detection will also be deactivated.

System limitations

Detection may be restricted in the following situations:

- the vehicle is damaged without impact, e.g. if an outside mirror is torn off or the paint is damaged by a key
- an impact occurs at low speed
- the electric parking brake is not applied

Information on Mercedes me connect and other services: http://www.mercedes.me.

Notes on parking up the vehicle

If you leave the vehicle parked up for longer than four weeks, the disconnected battery may be damaged by deep discharge.

If you leave the vehicle parked up for longer than six weeks, it may suffer disuse damage.

ⓘ Further information can be obtained at a qualified specialist workshop.

Standby mode (extension of the starter battery's period out of use)

Standby mode function

ⓘ This function is not available for all models.

If standby mode is activated, the vehicle can be parked for an extended period of time without losing power.

Standby mode is characterised by the following:

- the starter battery is preserved.
- the maximum non-operational time out of use is displayed in the multimedia system display.
- functions such as interior protection or tow-away protection are not available.
- the connection to online services is interrupted.

If the following conditions are fulfilled, standby mode can be activated or deactivated using the multimedia system:

- the engine is switched off.
- the ignition is switched on.

Exceeding the vehicle's displayed non-operational time may cause inconvenience, i.e. it cannot be guaranteed that the starter battery will reliably start the engine.

The starter battery must be charged first in the following situations:

- the vehicle's non-operational time must be extended.
- the Battery charge insufficient for standby mode message appears in the MBUX multimedia system display.

ⓘ Standby mode is automatically deactivated when the ignition is switched on.

Activating or deactivating standby mode

Requirements:

- the engine is switched off.

Multimedia system:

→ ⌂ ▸▸ Settings ▸▸ Fahrzeug (Vehicle)

▶ Switch Standby mode on or off.
When you activate the function, a prompt appears.

▶ Select Yes.
Standby mode is activated.

Driving and driving safety systems

Driving systems and your responsibility

Your vehicle is equipped with driving systems which assist you in driving, parking and manoeuvring the vehicle. The driving systems are tools and do not relieve you of your responsibility. Pay attention to the traffic conditions at all times and intervene when necessary. Be aware of the limitations regarding the safe use of these systems.

Function of the radar sensors

Some driving and driving safety systems use radar sensors to monitor the area in front of, behind or next to the vehicle (depending on the vehicle's equipment).

Depending on the vehicle's equipment, the radar sensors are integrated behind the bumpers and/or behind the radiator grille/Mercedes star. Keep these parts free of dirt, ice and slush (→ page 384). The sensors must not be covered, for example by bicycle racks, overhanging loads or radar-reflecting stickers. Following an impact and in the event of associated damage, which may not be visible, to the bumpers or radiator grille, have the function of the radar sensors checked at a qualified specialist workshop. The driver assistance system may no longer work properly.

Overview of driving systems and driving safety systems

In this section, you will find information about the following driving systems and driving safety systems:

- 360° Camera (→ page 202)
- ABS (**A**nti-lock **B**raking **S**ystem) (→ page 169)
- Active Distance Assist DISTRONIC (→ page 183)
- Adaptive brake lights (→ page 178)
- Active Brake Assist (→ page 174)
- Active Lane Keeping Assist (→ page 219)
- ATTENTION ASSIST (→ page 211)
- BAS (**B**rake **A**ssist **S**ystem) (→ page 169)
- DYNAMIC BODY CONTROL (→ page 195)
- EBD (**E**lectronic **B**rake force **D**istribution) (→ page 173)
- ESP® (**E**lectronic **S**tability **P**rogram) (→ page 170)
- Hill Start Assist
- HOLD function (→ page 194)
- STEER CONTROL (→ page 173)
- Active Steering Assist (→ page 188)
- Limiter (→ page 180)
- Active Parking Assist (→ page 205)
- Parking Assist PARKTRONIC (→ page 195)
- Reversing camera (→ page 199)
- Cruise control (→ page 179) (→ page 179) (→ page 179)
- Blind Spot Assist and Active Blind Spot Assist (→ page 216)
- Traffic Sign Assist (→ page 214)

Functions of ABS (anti-lock braking system)

ABS regulates the brake pressure in critical driving situations:

- During braking, e.g. at maximum full-stop braking or insufficient traction of the tyres, the wheels are prevented from blocking.
- Vehicle steerability while braking is ensured.

If ABS intervenes when braking, you will feel a pulsing in the brake pedal. The pulsating brake pedal can be an indication of hazardous road conditions and can serve as a reminder to take extra care while driving.

System limitations

- ABS is active from speeds of approx. 8 km/h.
- ABS may be impaired or may not function if a malfunction has occurred and the yellow [ABS] ABS warning lamp lights up continuously in the instrument cluster after the engine is started.

Function of BAS (Brake Assist System)

⚠ **WARNING** Risk of an accident caused by a malfunction in BAS (Brake Assist System)

If BAS is malfunctioning, the braking distance in an emergency braking situation is increased.

▶ Depress the brake pedal with full force in emergency braking situations. ABS prevents the wheels from locking.

BAS supports your emergency braking situation with additional brake force.

If you depress the brake pedal quickly, BAS is activated:

- BAS automatically boosts the brake pressure.
- BAS can shorten the braking distance.
- ABS prevents the wheels from locking.

The brakes will function as usual once you release the brake pedal. BAS is deactivated.

Functions of ESP® (Electronic Stability Program)

WARNING Risk of skidding if ESP® is malfunctioning

If ESP® is malfunctioning, ESP® cannot carry out vehicle stabilisation. In addition, other driving safety systems are switched off.

▶ Drive on carefully.

▶ Have ESP® checked at a qualified specialist workshop.

WARNING Risk of skidding if ESP® is deactivated

If you deactivate ESP®, ESP® cannot carry out vehicle stabilisation.

▶ ESP® should only be deactivated in the following situations.

ESP® can monitor and improve driving stability and traction in the following situations, within physical limits:

- When pulling away on wet or slippery carriageways.
- When braking.
- **Vehicles with trailer hitch:** in trailer operation from speeds of 65 km/h, if the vehicle/trailer combination begins to sway from side to side.
- In strong side winds when you are driving faster than 80 km/h.

If the vehicle deviates from the direction desired by the driver, ESP® can stabilise the vehicle by intervening in the following ways:

- One or more wheels are braked.
- The engine output is adapted according to the situation.

ESP® is deactivated if the ESP® OFF warning lamp lights up continuously in the instrument cluster:

- Driving stability will no longer be improved.
- **Vehicles with trailer hitch:** stabilisation of the vehicle/trailer combination is no longer active.
- Crosswind Assist is no longer active.
- The drive wheels could spin.
- ETS/4ETS traction control is still active.

ⓘ When ESP® is deactivated, you are still assisted by ESP® when braking.

ESP® is intervening if the ESP® warning lamp flashes in the instrument cluster:

- Do not deactivate ESP®.

- Only depress the accelerator pedal as far as is necessary.
- Adapt your driving style to suit the current road and weather conditions.

It may be best to deactivate ESP® in the following situations:

- When using snow chains.
- In deep snow.
- On sand or gravel.

ⓘ Spinning the wheels results in a cutting action which provides better grip.

If the ESP® warning lamp lights up continuously, ESP® is not available due to a malfunction.

Observe the following information:

- warning and indicator lamps (→ page 496)
- display messages (→ page 443)

ETS/4ETS (Electronic Traction System)

ETS/4ETS traction control is part of ESP® and makes it possible to pull away and accelerate on a slippery carriageway.

ETS/4ETS can improve the vehicle's traction by intervening in the following ways:

- The drive wheels are braked individually if they spin.
- More drive torque is transferred to the wheel or wheels with traction.

Influence of drive programs on ESP®

The drive programs enable ESP® to adapt to different weather and road conditions as well as the driver's preferred driving style. You can select the drive programs using the DYNAMIC SELECT switch (→ page 149).

ESP® characteristics per drive program

Drive program	ESP® mode	Characteristics
C (Comfort) **E** (Economy)	ESP® Comfort	These drive programs provide the ideal balance between traction and stability. Select drive program **E** or **C** in difficult road conditions, such as snow or ice, or when the road is wet from rain.
S (Sport)	ESP® Sport	This drive program continues to offer stability but with a sporty setup which allows the enthusiastic driver a more active driving style. Only select drive program **S** in good road conditions, for example on dry roads and clear stretches of road.

Activating/deactivating ESP® (Electronic Stability Program)

Multimedia system:

→ [⌂] ▸▸ Settings ▸▸ Quick access

ⓘ ESP® can only be activated/deactivated using quick access when at least one other function is available in quick access. ESP® can otherwise be found in the Assistance menu.

▶ Select ESP.
A prompt appears.

▶ Select On or [ESP OFF] Off.

ESP® is deactivated if the [ESP OFF] ESP® OFF warning lamp lights up continuously in the instrument cluster.

Observe the information on warning lamps and display messages which may be shown in the instrument cluster.

Functions of ESP® Crosswind Assist

ESP® Crosswind Assist detects sudden gusts of side wind and helps the driver to keep the vehicle in the lane:

- ESP® Crosswind Assist is active at vehicle speeds between 80 km/h and 200 km/h when driving straight ahead or cornering slightly.
- The vehicle is stabilised by means of individual brake application on one side.

Functions of ESP® trailer stabilisation

⚠ **WARNING** Risk of accident in poor road and weather conditions

In poor road and weather conditions, the trailer stabilisation cannot prevent lurching of the vehicle/trailer combination. Trailers with a high centre of gravity may tip over before ESP® detects this.

▶ Always adapt your driving style to suit the current road and weather conditions.

When driving with a trailer, ESP® can stabilise your vehicle if the trailer begins to swerve from side to side:

- ESP® trailer stabilisation is active above speeds of 65 km/h.
- Slight swerving is reduced by means of a targeted, individual brake application on one side.
- In the event of severe swerving, the engine output is also reduced and all wheels are braked.

ESP® trailer stabilisation may be impaired or may not function if:

- The trailer is not connected correctly or is not detected properly by the vehicle.

Function of EBD (Electronic Brake force Distribution)

EBD is characterised by the following:

- Monitoring and regulating the brake pressure on the rear wheels.
- Improved driving stability when braking, especially on bends.

STEER CONTROL function

STEER CONTROL helps you by transmitting a noticeable steering force to the steering wheel in the direction required for vehicle stabilisation.

This steering recommendation is given particularly in the following situations:

- Both right wheels or both left wheels are on a wet or slippery road surface when you brake.
- The vehicle starts to skid.

System limitations

STEER CONTROL may be impaired or may not function in the following situations:

- ESP® is deactivated.
- ESP® is malfunctioning.
- The steering is malfunctioning.

If ESP® is malfunctioning, you will be assisted further by the electric power steering.

Function of Active Brake Assist

Active Brake Assist consists of:

- Distance warning function
- Autonomous braking function
- Situation-dependent braking assistance
- **Vehicles with Driving Assistance Package:** Evasive Steering Assist

Active Brake Assist can help you to minimise the risk of a collision with vehicles or pedestrians or to reduce the effects of such a collision.

If Active Brake Assist has detected a risk of collision, you will be warned visually and acoustically.

If you do not react to the visual or acoustic warning, autonomous braking can be initiated in critical situations.

In especially critical situations, Active Brake Assist can initiate autonomous braking directly. In this case, the visual and acoustic warning occurs simultaneously with the braking application.

If you apply the brake yourself in a critical situation or apply the brake during autonomous braking, situation-dependent braking assistance occurs. The brake pressure increases up to maximum full-stop braking if necessary.

If the autonomous braking function or the situation-dependent braking assistance is triggered, additional preventive measures for occupant protection (PRE-SAFE®) may also be initiated, if the vehicle is equipped with these.

⚠ **WARNING** Risk of an accident caused by limited detection performance of Active Brake Assist

Active Brake Assist cannot always clearly identify objects and complex traffic situations.

In such cases, Active Brake Assist might:

- Give a warning or brake without reason
- Not give a warning or not brake

▶ Always pay careful attention to the traffic situation; do not rely on Active Brake Assist alone. Active Brake Assist is only an aid. The driver is responsible for maintaining a suitable distance to the vehicle in front, vehicle speed and for braking in good time.

▶ Be prepared to brake or swerve if necessary.

Also observe the system limitations of Active Brake Assist.

The individual subfunctions are available in the following speed ranges:
Distance warning function

The distance warning function issues a warning at speeds:

- From approximately 30 km/h, if over several seconds the distance maintained to the vehicle travelling in front is insufficient for the driven speed. The distance warning lamp then lights up in the instrument cluster.
- From approximately 7 km/h, if your vehicle is critically close to a vehicle or pedestrian. An intermittent warning tone sounds and the distance warning lamp lights up in the instrument cluster.

Brake immediately or take evasive action, provided it is safe to do so and the traffic situation allows this.

The distance warning function can aid you in the following situations with an intermittent warning tone and a warning lamp:

	Vehicles travelling in front	Stationary vehicles	Crossing vehicles	Moving pedestrians	Stationary pedestrians
Vehicles without Driving Assistance package	up to approx. 250 km/h	up to approx. 80 km/h	no reaction	up to approx. 80 km/h	no reaction
Vehicles with Driving Assistance package	up to approx. 250 km/h	up to approx. 100 km/h	up to approx. 70 km/h	up to approx. 80 km/h	up to approx. 70 km/h

Autonomous braking function
The autonomous braking function may intervene at speeds starting from approximately 7 km/h in the following situations:

	Vehicles travelling in front	Stationary vehicles	Crossing vehicles	Moving pedestrians	Stationary pedestrians
Vehicles without Driving Assistance package	up to approx. 200 km/h	up to approx. 50 km/h	no reaction	up to approx. 60 km/h	no reaction
Vehicles with Driving Assistance package	up to approx. 250 km/h	up to approx. 100 km/h	up to approx. 70 km/h	up to approx. 70 km/h	up to approx. 70 km/h

Situation-dependent braking assistance
Situation-dependent braking assistance may intervene at speeds starting from approximately 7 km/h in the following situations:

	Vehicles travelling in front	Stationary vehicles	Crossing vehicles	Moving pedestrians	Stationary pedestrians
Vehicles without Driving Assistance package	up to approx. 250 km/h	up to approx. 80 km/h	no reaction	up to approx. 60 km/h	no reaction
Vehicles with Driving Assistance package	up to approx. 250 km/h	up to approx. 100 km/h	up to approx. 70 km/h	up to approx. 70 km/h	up to approx. 70 km/h

Cancelling a brake application of Active Brake Assist

You can cancel a brake application of Active Brake Assist at any time by:

- Fully depressing the accelerator pedal or with kickdown.
- **Vehicles without Driving Assistance package:** releasing the brake pedal

Active Brake Assist may cancel the brake application when one of the following conditions is fulfilled:

- You manoeuvre to avoid the obstacle.
- There is no longer a risk of collision.
- An obstacle is no longer detected in front of your vehicle.

Evasive Steering Assist (only vehicles with Driving Assistance Package)

Evasive Steering Assist has the following characteristics:

- Can detect stationary or moving pedestrians.
- Can assist the driver with additional steering assistance if it detects a swerving manoeuvre.
- Can be activated by an abrupt steering movement during a swerving manoeuvre.
- Can assist during swerving and straightening of the vehicle.
- Can react from a speed of approximately 20 km/h up to a speed of approximately 70 km/h.

You can prevent the assistance at any time by actively steering.

⚠ **WARNING** Risk of an accident despite Evasive Steering Assist

Evasive Steering Assist cannot always clearly identify objects and complex traffic situations.

In addition, the steering support of Evasive Steering Assist is generally not sufficient to avoid a collision.

In such cases Evasive Steering Assist can:

- give an unnecessary warning or provide assistance
- not give a warning or not provide assistance

▶ Always pay careful attention to the traffic situation; do not rely on Evasive Steering Assist alone.

▶ Be ready to brake and take evasive action, if necessary.

▶ Prevent the assistance by actively steering in non-critical driving situations.

▶ Drive at an appropriate speed if pedestrians are close to the path of your vehicle.

Also observe the system limitations of Evasive Steering Assist.

System limitations

The system may be impaired or may not function in the following situations:

- In snow, rain, fog, heavy spray, if there is glare, in direct sunlight or in greatly varying light conditions.
- If the sensors are dirty, misted up, damaged or covered.
- If the sensors malfunction due to other radar source interference, for example strong radar reflections in multi-storey car parks.
- If a loss of tyre pressure or a defective tyre has been detected and displayed.
- Full system performance is not available for a few seconds after switching on the ignition or after driving off.

The system may not react correctly:

- In complex traffic situations where objects cannot always be clearly identified.
- To pedestrians or vehicles if they move quickly into the sensor detection range.
- To pedestrians who are hidden by other objects.
- If the typical outline of a pedestrian cannot be distinguished from the background.
- If a pedestrian is not recognised as such, e.g. due to special clothing or other objects.
- On bends with a tight radius.

Setting Active Brake Assist

Requirements:

- The ignition is switched on.

Multimedia system:

→ [⌂] ▸▸ Settings ▸▸ Assistance ▸▸ Active Brake Assist

The following settings are available:

- Early
- Medium
- Late

▶ Select a setting.
The setting is retained when the vehicle is next started.

Deactivating Active Brake Assist

ⓘ It is recommended that you always leave Active Brake Assist activated.

▶ Select Off.
The distance warning function and the autonomous braking function are deactivated.

Vehicles without Driving Assistance package: when the vehicle is next started, the medium setting is automatically selected.

Vehicles with Driving Assistance package: Evasive Steering Assist is not available. When the ignition is next started, the middle setting is selected automatically and Evasive Steering Assist is available.

ⓘ If Active Brake Assist is deactivated, the [×] symbol appears in the status bar of the multifunction display.

Adaptive Brake Lights function

Adaptive Brake Lights warn following traffic in an emergency braking situation:

- By flashing brake lamps

- By activating the hazard warning lights

If the vehicle is braked sharply from speeds above 50 km/h, the brake lamps flash rapidly. This provides traffic travelling behind you with an even more noticeable warning.

If the vehicle is travelling at speeds of more than 70 km/h at the beginning of the brake application, the hazard warning lights switch on once the vehicle is stationary. When pulling away again, the hazard warning lights switch off automatically at approximately 10 km/h. You can also switch off the hazard warning lights using the hazard warning button.

Cruise control and limiter

Function of cruise control

Cruise control accelerates and brakes the vehicle automatically in order to maintain a previously stored speed.

If you accelerate to overtake, for example, the stored speed is not deleted. If you remove your foot from the accelerator pedal after overtaking, cruise control will resume speed regulation back to the stored speed.

Cruise control is operated using the corresponding steering wheel buttons. You can store any road speed above 20 km/h up to the maximum road speed or to the set winter tyre limit.

If you fail to adapt your driving style, cruise control can neither reduce the risk of an accident nor override the laws of physics. It cannot take into account road, weather or traffic conditions. Cruise control is only an aid. You are responsible for the distance to the vehicle in front, for vehicle speed, for braking in good time and for staying in lane.

Displays in the multifunction display

The status of cruise control and the stored speed are shown in the multifunction display.

1. Cruise control is selected
2. Speed is saved, cruise control is deactivated
3. Speed is saved, cruise control is activated

ⓘ The segments extending from the current stored speed to the end of the scale, or to the set winter tyre limit, light up in the speedometer.

System limitations

Cruise control may be unable to maintain the stored speed on uphill gradients. The stored speed is resumed when the gradient evens out.

Change into a lower gear in good time on long and steep downhill gradients. Take particular

note of this when driving a laden vehicle. By doing so, you will make use of the braking effect of the engine. This relieves the load on the brake system and prevents the brakes from overheating and wearing too quickly.

Do not use cruise control in the following situations:

- In traffic situations which require frequent changes of speed, e.g. in heavy traffic, on winding roads.
- On slippery roads. Accelerating can cause the drive wheels to lose traction and the vehicle could then skid.
- If you are driving when visibility is poor.

Function of the limiter

The limiter restricts the speed of the vehicle. To reduce the speed swiftly to the set speed, the limiter applies the brakes automatically.

You can limit the speed as follows:

- Variable: for speed limits, e.g. in built-up areas.
- Permanent: for long-term speed restrictions, e.g. when driving in winter tyre mode.

The variable limiter is operated using the corresponding steering wheel buttons. You can store any road speed above 20 km/h up to the maximum road speed or to the set winter tyre limit. You can also perform settings while the vehicle is stationary if the vehicle has been started.

If you fail to adapt your driving style, the limiter can neither reduce the risk of an accident nor override the laws of physics. It cannot take into account road, weather or traffic conditions. The limiter is only an aid. You are responsible for the distance to the vehicle in front, for vehicle speed, for braking in good time and for staying in lane.

Displays in the multifunction display

The status of the limiter and the stored speed are shown in the multifunction display.

1. Limiter is selected
2. Speed is stored, limiter is deactivated
3. Speed is stored, limiter is activated

ⓘ The segments in the speedometer light up, up to the currently stored speed.

Kickdown

If you depress the accelerator pedal beyond the pressure point (kickdown), the limiter switches to passive mode. The Limiter passivemessage appears in the multifunction display.

After completion of kickdown, the variable limiter is activated again in the following situations:

- If the driven speed drops below the stored speed.
- If the stored speed is called up.
- If you store a new speed.

Operating cruise control or the variable limiter

> **WARNING** Risk of accident due to stored speed
>
> If you call up the stored speed and this is lower than your current speed, the vehicle decelerates.
>
> ▶ Take into account the traffic situation before calling up the stored speed.

Requirements:

Cruise control

- Cruise control is selected.
- ESP® must be activated, but not intervening.
- The driving speed is at least 20 km/h.
- The transmission is in position D.

Variable limiter:

- The vehicle has been started.
- The variable limiter is selected.

Switching between cruise control and the variable limiter

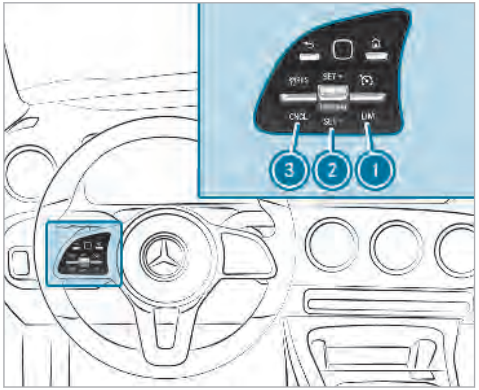

▶ **To select cruise control:** press rocker switch ① up.

▶ **To select the variable limiter:** press rocker switch ① down.

ⓘ Vehicles with Active Distance Assist DISTRONIC: the variable limiter is selected by a different button (→ page 184).

Activating cruise control or the variable limiter

▶ Press rocker switch ② up (SET+) or down (SET-).

▶ Remove your foot from the accelerator pedal. The current driven speed is stored and the vehicle maintains this speed (cruise control) or does not exceed it (limiter).

Increasing/decreasing speed

▶ Press rocker switch ② up/down to the pressure point.
The stored speed is increased or reduced by 1 km/h.

or

▶ Press and hold rocker switch ② up/down to the pressure point.
The stored speed is increased or reduced in increments of 1 km/h.

or

▶ Press rocker switch ② beyond the pressure point.
The stored speed is increased or reduced by 10 km/h.

or

▶ Press and hold rocker switch ② beyond the pressure point.
The stored speed is increased or reduced in increments of 10 km/h.

or

▶ Accelerate the vehicle to the desired speed.

▶ Press rocker switch ② up.

Adopting the detected speed

If cruise control/variable limiter is activated and Speed Limit Assist or Traffic Sign Assist has detected a speed restriction sign with a maximum permissible speed and this is displayed in the instrument cluster:

▶ Press rocker switch ③ up.
The maximum permissible speed shown by the traffic sign is stored and the vehicle maintains or does not exceed this speed.

Deactivating cruise control or the variable limiter

▶ Press rocker switch ③ (CNCL) down.

When cruise control or the variable limiter is deactivated:

- Rocker switch ② (SET+) or (SET-) saves the currently driven speed and the vehicle maintains this speed.
- Rocker switch ③ (RES) calls up the speed last stored and the vehicle maintains this speed.

ⓘ If you brake, deactivate ESP® or if ESP® intervenes, cruise control is deactivated. The variable limiter is not deactivated.
When you switch off the vehicle, the last speed stored is cleared.

Permanent limiter

If the vehicle should never exceed a specific speed (e.g. for driving in winter tyre mode), you can set this speed with the permanent limiter.

You do this by limiting the speed to a value between 160 km/h and 240 km/h in the multimedia system (→ page 182).

Shortly before the set speed is reached, it appears in the multifunction display. When you confirm the message with [⇦], display messages no longer appear until you switch off the vehicle. The speed will only be displayed again once the vehicle has been restarted.

The permanent limiter does not switch to passive mode even during kickdown and the driven speed remains below the set speed.

Setting the speed limitation for winter tyres

Multimedia system:

→ [⌂] ▸▸ Settings ▸▸ Fahrzeug (Vehicle) ▸▸ Winter tyres limit

▶ Select a speed or deactivate the function.

Active Distance Assist DISTRONIC

Function of Active Distance Assist DISTRONIC

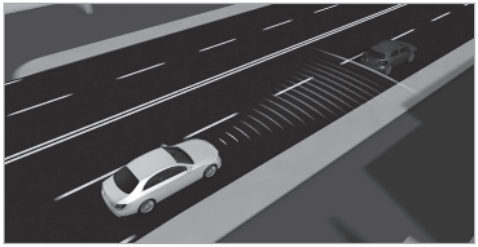

Active Distance Assist DISTRONIC maintains the set speed on free-flowing roads. If vehicles ahead are detected, the set distance is maintained, if necessary, until the vehicle comes to a halt. The vehicle accelerates or brakes depending on the distance to the vehicle in front and the set speed. The speed and distance to the vehicle in front are set and saved on the steering wheel on vehicles without the Driving Assistance Package, in the range between 20 km/h and 200 km/h and, on vehicles with the Driving Assistance Package, in the range between 20 km/h and 210 km/h.

Other features of Active Distance Assist DISTRONIC:

- Adjusts the driving style depending on the selected drive program (fuel-saving, comfortable or dynamic) (→ page 149)
- Vehicles with Driving Assistance Package: reacts to stationary vehicles (except bicycles and motorcycles) in urban speed ranges if conditions are sufficient to enable detection. It also does not detect pedestrians.
- Initiates rapid acceleration to the stored speed, if the turn signal indicator is switched on to change to the overtaking lane.
- Vehicles with Driving Assistance Package: takes one-sided overtaking restrictions into account on motorways or on multi-lane roads with separate carriageways.

Vehicles with Active Parking Assist and Driving Assistance Package: if the vehicle has been braked to a standstill on multi-lane, separate carriageways by Active Distance Assist DISTRONIC, it can automatically follow the vehicle in front driving off again within 30 seconds. If a critical situation is detected when driving off, a visual and acoustic warning is given indicating that the driver must now take control of the vehicle. The vehicle is not accelerated any further.

Active Distance Assist DISTRONIC is only an aid. The driver is responsible for keeping a safe distance to the vehicle in front, for vehicle speed and for braking in good time.

System limitations

The system may be impaired or may not function in the following instances, for example:

- In snow, rain, fog, heavy spray, if there is glare, in direct sunlight or in greatly varying light conditions.
- The windscreen in the area of the camera is dirty, misted up, damaged or covered.
- If the radar sensors are dirty or covered.
- On slippery roads, braking or accelerating can cause the drive wheels to lose traction and the vehicle could then skid.
- In multi-storey car parks or on roads with steep uphill or downhill gradients.

Do not use Active Distance Assist DISTRONIC in these situations.

⚠ **WARNING** Risk of accident from acceleration or braking by Active Distance Assist DISTRONIC

Active Distance Assist DISTRONIC may accelerate or brake in the following cases, for example:

- If the vehicle pulls away using Active Distance Assist DISTRONIC.
- If the stored speed is called up and is considerably faster or slower than the currently driven speed.
- If Active Distance Assist DISTRONIC no longer detects a vehicle in front or does not react to relevant objects.

▶ Always carefully observe the traffic conditions and be ready to brake at all times.

▶ Take into account the traffic situation before calling up the stored speed.

⚠ **WARNING** Risk of accident due to insufficient deceleration by Active Distance Assist DISTRONIC

Active Distance Assist DISTRONIC brakes your vehicle with up to 50 % of the maximum possible deceleration. If this deceleration is not sufficient, Active Distance Assist DISTRONIC alerts you with a visual and acoustic warning.

▶ In these cases, adjust your speed and keep a sufficient distance.

▶ Brake the vehicle yourself and/or take evasive action.

⚠ **WARNING** Risk of accident if detection function of Active Distance Assist DISTRONIC is impaired

Active Distance Assist DISTRONIC does not react or only partially reacts:

- When driving on a different line to the vehicle ahead or changing lane.
- To pedestrians, animals, bicycles or motor bikes, stationary vehicles or unexpected obstacles.
- To complex traffic situations.
- To oncoming vehicles and crossing traffic.

Active Distance Assist DISTRONIC can neither give warnings nor intervene in such situations.

▶ Always observe the traffic conditions carefully and react accordingly.

Operating Active Distance Assist DISTRONIC

Requirements:

- The vehicle has been started.
- The electric parking brake is released.
- ESP® is activated and is not intervening.
- The transmission is in position D.
- All the doors are closed.
- Check of the radar sensor system successfully completed (vehicle travelling faster than 20 km/h).

Switching between Active Distance Assist DISTRONIC and the limiter

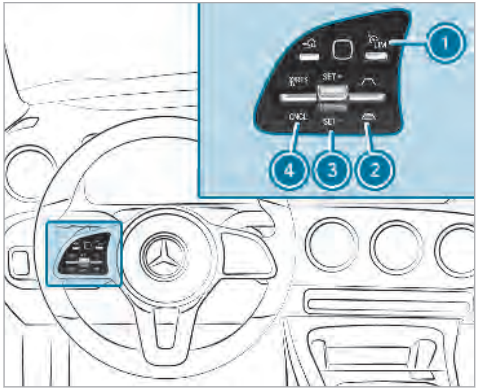

▶ Press button ①.

Activating the variable limiter or Active Distance Assist DISTRONIC

▶ **To activate without a stored speed:** press rocker switch ③ up (SET+) or down (SET-), or press rocker switch ④ up. Remove your foot from the accelerator pedal (Active Distance Assist DISTRONIC).
The current driven speed is stored and maintained (Active Distance Assist DISTRONIC) or limited (variable limiter) by the vehicle.

or

▶ **To activate with a stored speed:** press rocker switch ④ up. Remove your foot from the accelerator pedal (Active Distance Assist DISTRONIC).

ⓘ If rocker switch ④ is pressed up twice while driving, Active Distance Assist DISTRONIC or the variable limiter is activated with the speed restriction displayed in the instrument cluster.

Accepting the displayed speed restriction when Distance Assist DISTRONIC or the limiter is activated

▶ Press rocker switch ④ (RES) up.
The speed limit displayed in the instrument cluster is adopted as the stored speed. The vehicle adapts its speed to that of the vehicle in front, but only up to the stored speed.

Pulling away with Active Distance Assist DISTRONIC

▶ Remove your foot from the brake pedal.
▶ Press rocker switch ④ (RES) up.

or

▶ Depress the accelerator pedal briefly and distinctly.
The functions of Active Distance Assist DISTRONIC continue to be carried out.

Deactivating Active Distance Assist DISTRONIC

⚠ **WARNING** Risk of accident due to Active Distance Assist DISTRONIC still being activated when you leave the driver's seat

If you leave the driver's seat while the vehicle is being braked by Active Distance Assist DISTRONIC only, the vehicle can roll away.

▶ Always deactivate Active Distance Assist DISTRONIC and secure the vehicle to prevent it from rolling away before you leave the driver's seat.

▶ Press rocker switch ④ (CNCL) down.

Increasing or reducing the speed

▶ Press rocker switch ③ up (SET+) or down (SET-) to the pressure point.
The stored speed is increased or reduced by 1 km/h.

or

▶ Press and hold rocker switch ③ up/down to the pressure point.
The stored speed is increased or reduced in increments of 1 km/h.

or

▶ Press rocker switch ③ beyond the pressure point.
The stored speed is increased or reduced by 10 km/h.

or

▶ Press and hold rocker switch ③ beyond the pressure point.
The stored speed is increased or reduced in increments of 10 km/h.

Reducing or increasing the specified distance from the vehicle in front

▶ **To increase the specified distance:** press rocker switch ② down.

▶ **To reduce the specified distance:** press rocker switch ② up.

Function of Active Speed Limit Assist

ⓘ The following function is country-dependent and only available in conjunction with the Driving Assistance Package.

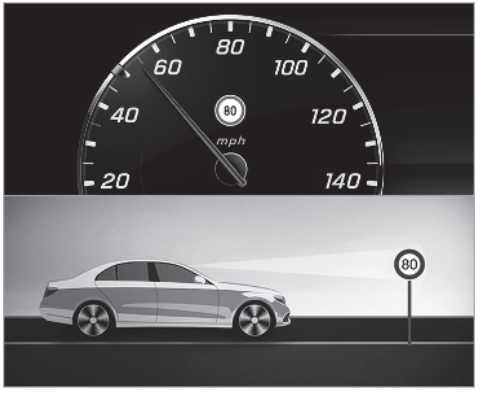

If a change in the speed limit is detected and Active Distance Assist DISTRONIC is activated, Active Distance Assist DISTRONIC assumes this new speed as the stored speed.

The driven speed is adjusted when the vehicle is level with the traffic sign at the latest. In the case of signs indicating entry into an urban area, the speed is adapted beforehand. The speed limit display in the Instrument Display is always

updated when the vehicle is level with the traffic sign.

If there is no speed restriction on an unlimited stretch of road (e.g. on a motorway), the recommended speed is adopted as the stored speed. The system uses the speed stored on an unlimited stretch of road as the recommended speed. If you do not alter the stored speed on an unlimited stretch of road, the recommended speed is 130 km/h.

If Active Distance Assist DISTRONIC has been put into passive mode by pressing the accelerator pedal, only speed limits which are higher than the set speed are adopted.

Active Speed Limit Assist can be configured in the multimedia system (→ page 216).

Active Speed Limit Assist is only an aid. The driver is responsible for keeping a safe distance to the vehicle in front, for vehicle speed and for braking in good time. The maximum permissible speed also depends on factors such as the road surface and traffic conditions.

System limitations

Temporary speed restrictions (e.g. for a certain time or due to weather conditions) cannot be properly detected by the system. The maximum permissible speed applying for a vehicle with a trailer is not detected by the system. In these situations you must adjust your speed yourself.

⚠ **WARNING** Risk of accident due to Active Speed Limit Assist adapting the vehicle's speed

The speed adopted by Active Speed Limit Assist may be too high or incorrect in some individual cases, such as:

- In the wet or in fog
- When towing a trailer

▶ Ensure that the driven speed complies with traffic regulations.

▶ Adjust the driving speed to suit current traffic and weather conditions.

Function of route-based speed adaptation

ⓘ The following function is country-dependent and only available in conjunction with the Driving Assistance Package.

When Distance Assist DISTRONIC is active, the function adjusts the speed depending on the route events ahead. Depending on the drive program selected, the vehicle negotiates the route event ahead in a fuel-saving, comfortable or dynamic manner. When the route event has been passed, the vehicle accelerates again to the stored speed. The set distance to the vehicle ahead, vehicles detected ahead and speed restrictions ahead are taken into account.

Route-based speed adjustment can by configured in the multimedia system .

Route events ahead are:

- Bends
- T-junctions, roundabouts and toll stations
- Turns and exits

ⓘ When the toll station is reached, Active Distance Assist DISTRONIC adopts the speed as the stored speed.

Also, the speed is reduced if the turn signal to change lanes is switched on and one of the following situations is detected:

- Turning off at junctions
- On slowing-down lanes
- On lanes adjacent to slowing-down lanes

The driver is responsible for choosing the right speed and observing other road users. This applies in particular to junctions, roundabouts and sets of traffic lights, as route-based speed adaptation does not brake the vehicle to a standstill.

When route guidance is active, the first speed adjustment is carried out automatically. If the turn signal indicator is switched on, the selected route is confirmed and further speed adjustment is activated.

Speed adjustment is cancelled in the following cases:

- If the turn signal indicator is switched off before the route event.
- If the driver depresses the accelerator or brake pedal during the process.

System limitations

Route-based speed adaptation does not take right of way regulations into account. The driver is responsible for complying with road traffic regulations and driving at a suitable speed.

In difficult conditions (e.g. unclear roads, narrow lanes, wet road surfaces, snow or ice) or when driving with a trailer, the speed adjustment made by the system may not always be suitable. In these situations the driver must intervene accordingly.

⚠ **WARNING** Risk of accident in spite of route-based speed adjustment

Route-based speed adjustment might malfunction or be temporarily unavailable in the following situations:

- If map data is not up to date or available
- If you do not follow the selected route guidance
- If the set route is re-planned
- In road construction areas
- When towing a trailer
- In bad weather or road conditions
- If the accelerator pedal is depressed

▶ Adjust the speed to the traffic situation.

Active Steering Assist

Function of Active Steering Assist

Active Steering Assist assists the driver at speeds up to 210 km/h and helps the driver to stay in the centre of the lane by means of moderate steering interventions. The system orients itself using detected lane markings. Depending

on the speed driven, Active Steering Assist uses the vehicles ahead as a reference. If the detection of lane markings and vehicles ahead is impaired, Active Steering Assist switches to passive mode. The system does not provide support in the form of steering interventions.

- The driver is required to keep their hands on the steering wheel at all times and be able to intervene at any time to correct the course of the vehicle and keep it in lane.
- The status of Active Steering Assist is displayed in the status bar of the multifunction display.

Steering and contact detection

The driver is required to keep their hands on the steering wheel at all times and to be able to intervene at any time. The driver must expect a change from active to passive mode or vice versa at any time.

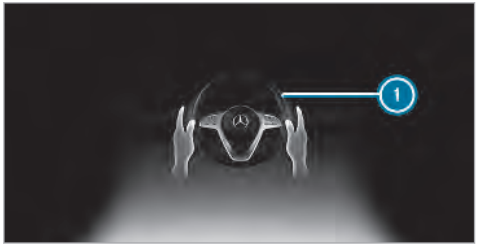

If the system reaches a system limitation or the driver has not steered the vehicle for a considerable period of time or has removed their hands from the steering wheel, the system will, depending on the situation, first alert the driver with a visual warning. Display 1 appears in the multifunction display. If the driver still does not steer the vehicle themself, or still has not taken hold of the steering wheel, a repeated warning tone sounds in addition to the visual warning message to remind the driver to take control of the vehicle.

The warning message does not appear or disappears if one of the following conditions are met:

- The driver steers the vehicle.
- The driver presses a steering wheel button or operates Touch Control.

Active Steering Assist is only an aid. The driver is responsible for the distance to the vehicle in front, for vehicle speed, for braking in good time and for staying in lane. Before changing lanes, the driver must make sure that the neighbouring lane is free (glance over the shoulder).

System limitations

Active Steering Assist has a limited steering torque for lateral guidance. In some cases, the steering intervention is not sufficient to keep the vehicle in the lane or to drive past exits. Active Steering Assist cannot provide the driver with steering assistance at roundabouts, T-junctions, junctions, toll stations or turns, for example.

The system may be impaired or may not function in the following instances:

- In snow, rain, fog, heavy spray, if there is glare, direct sunlight, greatly varying light conditions, reflections or strong shadows on the carriageway.
- Insufficient road illumination.

- The windscreen in the area of the camera is dirty, misted up, damaged or covered.
- Absence of lane markings, or several unclear lane markings, or if the markings change rapidly.
- The distance to the vehicle in front is too small and the lane markings thus cannot be detected.
- The carriageway is narrow and winding.
- Obstacles on the lane or projecting out into the lane.

The system does not provide assistance in the following conditions:

- On tight bends, roundabouts and when turning.
- When towing a trailer.
- If you actively change lane without switching on the turn signal indicator.

WARNING Risk of accident if Active Steering Assist unexpectedly stops functioning

If the system limitations of Active Steering Assist are reached there is no guarantee that the system will remain active or will keep the vehicle in lane.

▶ Always keep your hands on the steering wheel and observe the traffic carefully.

▶ Always steer the vehicle paying attention to traffic conditions.

WARNING Risk of accident if Active Steering Assist unexpectedly intervenes

A malfunction in the detection of lane markings and objects can occur.

This could cause unexpected steering intervention.

▶ Steer according to traffic conditions.

Activating/deactivating Active Steering Assist

Requirements:

- ESP® must be activated, but not intervening.
- Active Distance Assist DISTRONIC is activated.

Multimedia system:

→ [⌂] ▸▸ Settings ▸▸ Schnellzugriff (Quick access)

▶ Select [🚗] Active Steering Assist.

Function of Active Lane Change Assist

ⓘ The following function is country-dependent and only available in conjunction with the Driving Assistance Package.

Active Lane Change Assist supports the driver when changing lanes, by applying steering torque.

Assistance when changing lanes is provided if all the following conditions are met:

- You are driving on a motorway or road with multiple lanes in the direction of travel.

- The neighbouring lane is separated by a broken lane marking.
- No vehicle is detected in the adjacent lane.
- The driven speed is between 80 km/h and 180 km/h.
- Active Lane Change Assist is activated by the driver with the turn signal indicator.
- Active Lane Change Assist is switched on in the multimedia system.
- Active Steering Assist is switched on and active.

If no vehicle is detected in the adjacent lane and a lane change is permitted, the steering wheel symbol and the arrow are shown in green ②. The Lane change to the left message appears, for example. If Active Lane Change Assist has been activated with the turn signal indicator but a lane change is not immediately possible, the steering wheel symbol remains green and the arrow appears grey ①. When the lane change support starts, the turn signal indicator is automatically activated. If a lane change is not possible, the arrow fades out after a short period and a new lane change must be initiated. An immediate lane change is only possible on motorway sections without speed limits.

If the system is impaired, Active Lane Change Assist may be cancelled. If it is cancelled the Lane change cancelled message appears in the multifunction display and a warning tone sounds.

⚠ WARNING Risk of accident from changing lane to an occupied adjacent lane

Lane Change Assist cannot always detect clearly if the adjacent lane is free.

The lane change might be initiated although the adjacent lane is not free.

▶ Before changing lanes, make sure that the neighbouring lane is free and there is no danger to other road users.

▶ Monitor the lane change.

⚠ WARNING Risk of accident if Lane Change Assist unexpectedly stops functioning

If the system limitations for Lane Change Assist have been reached, there is no guarantee that the system will remain active.

Lane Change Assist cannot then assist you by applying steering torques.

▶ Always monitor the lane change and keep your hands on the steering wheel. Observe the traffic conditions and steer and/or brake if necessary.

System limitations

The system limitations of Active Steering Assist apply to Active Lane Change Assist (→ page 188).

Activating/deactivating Active Lane Change Assist

Multimedia system:

→ ⌂ ▸▸ Settings ▸▸ Assistance ▸▸ Act. lane chan. assist

▶ Activate or deactivate the function.

Function of Active Emergency Stop Assist

If the driver continues to ignore the repeated acoustic warning to put their hands on the steering wheel, Active Distance Assist DISTRONIC reduces the speed. If the driver still does not respond, the Beginning emergency stop message is shown in the multifunction display. The vehicle is decelerated in stages to a standstill. At speeds below 60 km/h the hazard warning lights switch on automatically.

When the vehicle is stationary, the following actions are carried out:

- The vehicle is secured with the electric parking brake.
- Active Distance Assist DISTRONIC is ended.
- The vehicle is unlocked.
- If possible, an emergency call is placed to the Mercedes-Benz emergency call centre.

The driver can cancel the deceleration at any time by performing one of the following actions:

- Steering
- Depressing the brake or accelerator pedal
- Pressing a steering wheel button or operating Touch Control
- Activating or deactivating Active Distance Assist DISTRONIC

Overview of Active Distance Assist DISTRONIC displays in the instrument cluster

The assistance graphic and the status display show the status of the following functions in the instrument cluster:

- Active Distance Assist DISTRONIC
- Route-based speed adjustment
- Active Steering Assist

Assistant display

1. Route-based speed adjustment (type of route event)
2. Vehicle ahead
3. Distance indicator
4. Set specified distance

Active Distance Assist DISTRONIC status display and route-based speed adjustment

1. Active Distance Assist DISTRONIC selected, set specified distance
2. Active Distance Assist DISTRONIC deactivated, speed stored
3. Active Distance Assist DISTRONIC active, speed stored, no vehicle detected (grey vehicle symbol)
4. Active Distance Assist DISTRONIC active, speed stored, vehicle detected (green vehicle symbol)
5. Active Distance Assist DISTRONIC and route-based speed adjustment active, speed stored

ⓘ On motorways or high-speed major roads, the green vehicle symbol is displayed cyclically when the vehicle is ready to pull away.

Speedometer

The stored speed is highlighted on the speedometer. If the speed of the vehicle ahead or the speed adjustment is less than the stored speed due to the route event ahead, the segments in the speedometer light up. Activation or deactivation of Active Distance Assist DISTRONIC, as well as alterations in the saved speed and the distance to be maintained, are displayed in the individual control feedback of the multifunction display.

Active Steering Assist status display

1. Grey steering wheel: Active Steering Assist switched on and passive
2. Green steering wheel: Active Steering Assist switched on and active
3. Yellow steering wheel flashing: transition from active to passive status (system limitation detected or prompt to the driver to actively confirm)

During the transition from the active to passive status, symbol 3 is shown as enlarged and flashes yellow. Once the system is passive, symbol 1 is shown as grey in the multifunction display.

Information on Hill Start Assist

Hill Start Assist holds the vehicle for a short time when pulling away on a hill under the following conditions:

- The transmission is in position D or R.
- The electric parking brake is released.

This gives you enough time to move your foot from the brake pedal to the accelerator pedal and depress it before the vehicle begins to roll.

WARNING Risk of accident and injury caused by the vehicle rolling away

After a short time, Hill Start Assist no longer holds the vehicle and it can roll away.

▶ Therefore, swiftly move your foot from the brake pedal to the accelerator pedal. Never attempt to leave the vehicle if it is being held by Hill Start Assist.

HOLD function

HOLD function

The HOLD function holds the vehicle at a standstill without requiring you to depress the brake pedal, e.g. when pulling away uphill.

System limitations

- The incline must not be greater than 30%.

Activating/deactivating the HOLD function

WARNING Risk of an accident due to the HOLD function being activated when you leave the vehicle

If you leave the vehicle while only the HOLD function is braking the vehicle, the vehicle can roll away in the following situations:

- If there is a malfunction in the system or in the power supply.
- If the HOLD function is deactivated by depressing the accelerator pedal or the brake pedal, e.g. by a vehicle occupant.
- If the electrics in the engine compartment, the battery or the fuses are tampered with or if the battery is disconnected.

▶ Always deactivate the HOLD function and secure the vehicle against rolling away before leaving the vehicle.

NOTE Damage from automatic braking

If one of the following functions is switched on, the vehicle brakes automatically in certain situations:

- Active Brake Assist
- Active Distance Assist DISTRONIC
- HOLD function
- Active Parking Assist

To avoid damage to the vehicle, deactivate these systems in the following or similar situations:

▶ During towing

▶ In a car wash

Requirements:

- The vehicle is stationary.
- The driver's door is closed or the seat belt on the driver's side is fastened.
- The engine is running or has been automatically switched off by the ECO start/stop function.
- The electric parking brake is released.
- Active Distance Assist DISTRONIC is deactivated.
- The transmission is in position D, R or N.

Activating the HOLD function

▶ Depress the brake pedal and after a short time quickly depress further until the HOLD display appears in the multifunction display.

▶ Release the brake pedal.

Deactivating the HOLD function

▶ Depress the accelerator pedal to pull away.

or

▶ Depress the brake pedal until the HOLD display disappears from the multifunction display.

The HOLD function is deactivated in the following situations:

- Active Distance Assist DISTRONIC is activated.
- The transmission is switched to position P.
- The vehicle is secured with the electric parking brake.

In the following situations, the vehicle is held by the transmission position P or by the electric parking brake:

- The seat belt is unfastened and the driver's door is opened.
- The engine is switched off.
- There is a malfunction in the system or the power supply is insufficient.

DYNAMIC BODY CONTROL function

DYNAMIC BODY CONTROL continuously adjusts the characteristics of the suspension dampers to the current operating and driving conditions.

The damping is tuned individually for each wheel and is affected by the following factors:

- The road surface conditions
- Vehicle load
- The drive program selected
- The driving style

The drive program can be adjusted using the DYNAMIC SELECT switch.

Parking Assist PARKTRONIC

Function of Parking Assist PARKTRONIC

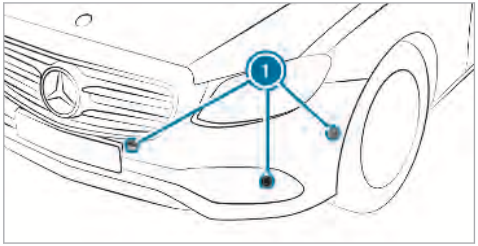

Parking Assist PARKTRONIC is an electronic parking assistance system with ultrasound. It monitors the area around your vehicle using six sensors ① in the front bumper and six sensors in the rear bumper. Parking Assist PARKTRONIC shows you the distance between your vehicle and a detected obstacle visually and audibly.

Parking Assist PARKTRONIC is only an aid. It is not a substitute for your attention to the surroundings. The responsibility for safe manoeuvring and parking remains with you. Make sure that there are no persons, animals or objects in the manoeuvring area while manoeuvring and parking in/exiting parking spaces.

In the standard setting, an intermittent warning tone sounds from a distance of approximately 0.3 m to an obstacle in front and approximately 1.0 m to an obstacle behind. A continuous tone sounds from a distance of approximately 0.2 m. Using the "Early warning" setting, the warning tones for front and side impact protection can also be set to sound at a greater distance of approximately 1.0 m (→ page 198).

ⓘ The "Early warning" setting is always active in the rear of the vehicle.

Parking Assist PARKTRONIC display in the multimedia system

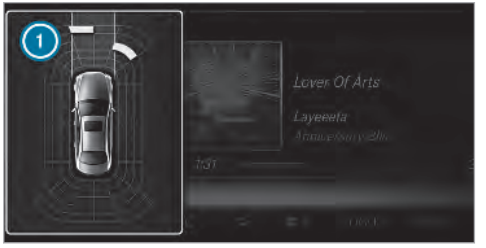

Vehicles with Active Parking Assist without a 360° Camera

Vehicles with Active Parking Assist and a 360° Camera

If Active Parking Assist is not activated and an obstacle is detected in the path of the vehicle, a pop-up window for Parking Assist PARKTRONIC ① appears in the multimedia system at speeds up to approximately 10 km/h.

System limitations

Parking Assist PARKTRONIC does not necessarily take into account the following obstacles:

- Obstacles below the detection range, e.g. persons, animals or objects.

- Obstacles above the detection range, e.g. overhanging loads, overhangs or loading ramps of lorries.

The sensors must be free of dirt, ice and slush. Otherwise, they may not function correctly. Clean the sensors regularly, taking care not to scratch or damage them.

Vehicles with trailer hitch: Parking Assist PARKTRONIC is deactivated for the rear zone when you establish an electrical connection between your vehicle and a trailer.

Function of the passive side impact protection

Passive side impact protection is an additional Parking Assist PARKTRONIC function which warns the driver about obstacles at the side of the vehicle. A warning is issued when obstacles are detected between the front and rear detection range. In order for an object to be detected, the sensors in the front and rear bumper must detect the object while you are driving past it.

During the parking procedure or manoeuvring, objects are detected as the vehicle drives past. If you steer in the direction of a detected obstacle and there is a risk of a lateral collision, a warning is issued. The lateral segments light up orange or red, depending on the distance to the obstacle.

Segment colour depending on distance

Colour	Lateral distance in cm
Orange	Approx 30 - 60
Red	Approx. < 30

In order for lateral front or rear segments to be displayed, the vehicle must first travel a distance of at least half of the vehicle length. Once the vehicle has travelled the length of the vehicle, all of the lateral front and rear segments can be displayed.

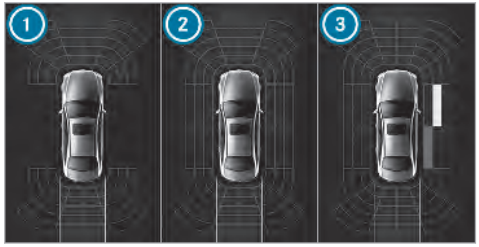

Vehicles without 360° Camera

1. Parking Assist PARKTRONIC is only operational in the front and rear
2. Parking Assist PARKTRONIC is operational and can also warn the driver about obstacles at the side of the vehicle
3. Obstacle detected at the front right (orange) and rear (red)

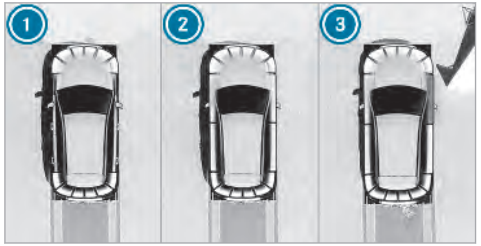

Vehicles with 360° Camera

1. Parking Assist PARKTRONIC is only operational in the front and rear
2. Parking Assist PARKTRONIC is operational and can also warn the driver about obstacles at the side of the vehicle
3. Obstacle detected at the front right (orange) and rear (red)

Saved lateral obstacles are deleted in the following situations, for example:

- You switch off the vehicle.
- You open the doors.

After the engine is restarted, obstacles must be detected again before a new warning can be issued.

System limitations

The system limitations for Parking Assist PARKTRONIC apply for passive side impact protection.

The following objects are not detected, for example:

- Pedestrians who approach the vehicle from the side
- Objects placed next to the vehicle

Deactivating/activating Parking Assist PARKTRONIC

NOTE Risk of an accident from objects at close range

Parking Assist PARKTRONIC may not detect certain objects at close range.

▶ When parking or manoeuvring the vehicle, pay particular attention to any objects which are above or below the sensors, e.g. flowerpots or drawbars.

The vehicle or other objects could otherwise be damaged.

If the [P OFF] symbol is shown in the multifunction display, Parking Assist PARKTRONIC is not active.

Multimedia system:

→ Settings ▸▸ Quick access ▸▸ PARKTRONIC

▶ Activate or deactivate the function.

ⓘ Parking Assist PARKTRONIC is automatically activated when the vehicle is started.

Adjusting the warning tones of Parking Assist PARKTRONIC

Multimedia system:

→ [⌂] ▸▸ Settings ▸▸ Assistance ▸▸ Camera & Park. Assist ▸▸ Set warning tone

Adjusting the volume of the warning tones

▶ Select Warning tone volume.

▶ Set a value.

Adjusting the pitch of the warning tones

▶ Select Warning tone pitch.
Set a value.

Specifying the starting point for the warning tones

You can specify whether the Parking Assist PARKTRONIC warning tones should commence when the vehicle is further away from an obstacle.

▶ Select Warn early all-round.

▶ Activate or deactivate the function.

Activating/deactivating audio fadeout

You can specify whether the volume of a media source in the multimedia system is to be reduced when Parking Assist PARKTRONIC gives an audible warning.

▶ Select Audio fadeout during warning tones.

▶ Activate or deactivate the function.

Reversing camera

Function of the reversing camera

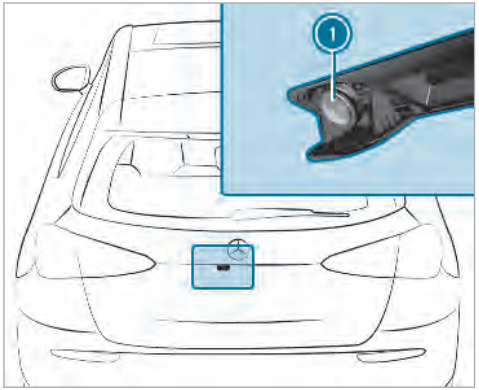

If you have activated the function in the multimedia system, the image from reversing camera 1 is shown in the multimedia system display when reverse gear is selected. Dynamic guide lines show the path the vehicle will take with the steering wheel in its current position. This helps you to orient yourself and to avoid obstacles when reversing.

The reversing camera is only an aid. It is not a substitute for your attention to the surroundings. The responsibility for safe manoeuvring and parking remains with you. Make sure that there are no persons, animals or objects in the manoeuvring area while manoeuvring and parking in parking spaces.

You can select from the following views:

- Normal view
- Wide-angle view
- Trailer view

The area behind the vehicle is displayed as a mirror image, as in the inside rearview mirror.

System limitations

The reversing camera will not function or will only partially function in the following situations:

- The tailgate is open.
- There is heavy rain, snow or fog.
- The light conditions are poor, e.g. at night.

- The camera lens is obstructed, dirty or misted up. Observe the notes on cleaning the reversing camera (→ page 384).
- The camera or rear of your vehicle is damaged. In this case, have the camera and its position and setting checked at a qualified specialist workshop.

The field of vision and other functions of the reversing camera may be restricted due to additional accessories on the rear of the vehicle (e.g. licence plate bracket or bicycle rack).

ⓘ The display contrast may be impaired due to incident sunlight or other light sources. In this case, pay particular attention.

ⓘ Have the display repaired or replaced if, for example, pixel errors considerably restrict its use.

Vehicles without Active Parking Assist

The following camera views are available in the multimedia system:

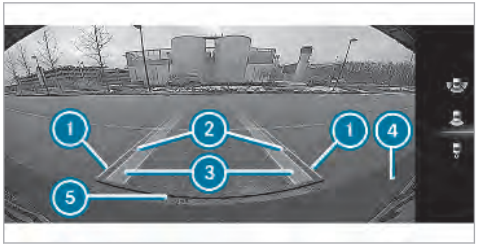

Normal view

1. Yellow guide line, vehicle width (driven surface) depending on the current steering wheel angle (dynamic)
2. Yellow guide line at a distance of approximately 1.0 m from the rear area
3. Yellow lane marking the course the tyres will take at the current steering wheel angle (dynamic)
4. Bumper
5. Red guide line at a distance of approximately 0.3 m from the rear area

Wide-angle view

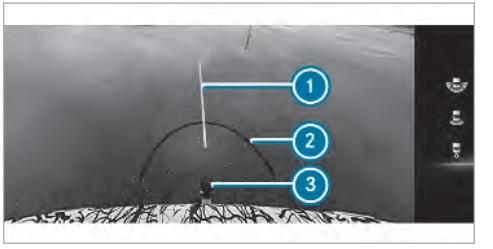

View of trailer (if trailer hitch is fitted)

1. Yellow guide line, locating aid

② Red guide line at a distance of approximately 0.3 m to the ball head of the trailer hitch
③ Ball head of the trailer hitch

Vehicles with Active Parking Assist
The following camera views are available in the multimedia system:

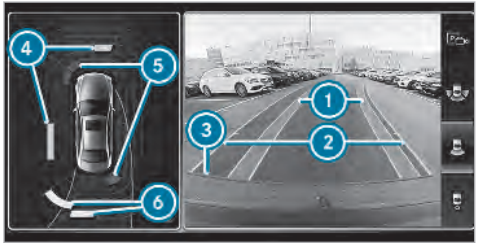

Normal view

① Yellow lane marking the course the tyres will take at the current steering wheel angle (dynamic)
② Yellow guide line, vehicle width (driven surface) depending on the current steering wheel angle (dynamic)
③ Red guide line at a distance of approximately 0.3 m from the rear area
④ Yellow warning display of Parking Assist PARKTRONIC: obstacles are at a distance of between approximately 0.6 m and 1.0 m
⑤ Red warning display of Parking Assist PARKTRONIC: obstacles are very close (approximately 0.3 m or less)
⑥ Orange warning display of Parking Assist PARKTRONIC: obstacles are a medium distance away (between approximately 0.3 m and 0.6 m)

ⓘ If the entire system fails, the inner segments of the warning display are shown in red and the [P OFF] symbol appears in the multifunction display.
If the system fails in the rear:
- The rear segments are shown in red when reversing.
- The rear segments are hidden when driving forwards.

When Active Parking Assist is active, the lanes are displayed in green.

If Parking Assist PARKTRONIC is deactivated, the warning display fades out.

Wide-angle view

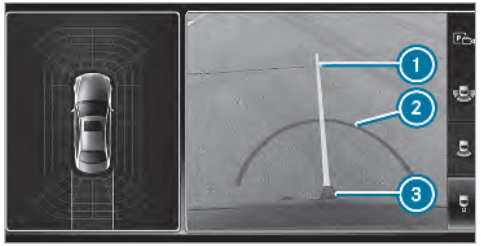

View of trailer (if trailer hitch is fitted)

1. Yellow guide line, locating aid
2. Red guide line at a distance of approximately 0.3 m to the ball head of the trailer hitch
3. Ball head of the trailer hitch

360° Camera

Function of the 360° Camera

The 360° Camera is a system that consists of four cameras. The cameras cover the immediate vehicle surroundings. The system assists you, e.g. when parking or at exits with reduced visibility.

The 360° Camera is only an aid. It is not a substitute for your attention to the surroundings. The responsibility for safe manoeuvring and parking remains with you. Make sure that there are no persons, animals or objects in the manoeuvring area while manoeuvring and parking in parking spaces.

The system evaluates images from the following cameras:

- Reversing camera
- Front camera
- Two side cameras in the outside mirrors

Views of the 360° Camera

You can select from different views:

1. Wide-angle view, front
2. Top view with image from the front camera
3. Top view with images from the side cameras in the outside mirrors
4. Wide-angle view, rear
5. Top view with image from the reversing camera
6. Top view with trailer view (if trailer hitch is fitted)

Top view

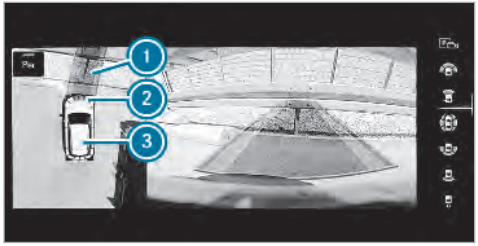

1. Lane indicating the route the vehicle will take with the steering wheel in its current position
2. Yellow warning display of Parking Assist PARKTRONIC: obstacles at a distance of approximately 1.0 m or less
3. Your vehicle from above

If the distance to the object lessens, the colour of warning display 2 changes. From a distance of approximately 0.6 m the warning display is shown in orange. From a distance of approximately 0.3 m the warning display is shown in red.

When Parking Assist PARKTRONIC is operational and no object is detected, the segments of the warning display are shown in grey.

ⓘ If the entire system fails, the segments of the warning display are shown in red and the [P OFF] symbol appears in the multifunction display.
If the system fails at the rear, the display of the segments changes as follows:
- The rear segments are shown in red when reversing.
- The rear segments are hidden when driving forwards.

If Parking Assist PARKTRONIC is deactivated, the warning display fades out.

Guide lines

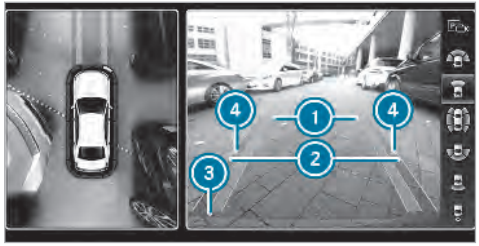

1. Yellow lane marking the course the tyres will take at the current steering wheel angle (dynamic)
2. Yellow guide line, vehicle width (driven surface) depending on the current steering wheel angle (dynamic)
3. Red guide line at a distance of approximately 0.3 m from the rear area
4. Mark at a distance of approx. 1.0 m

ⓘ When Active Parking Assist is active, the lanes are displayed in green.

The guide lines in the multimedia system display show the distances to your vehicle. The distances only apply to road level.
In trailer mode, the guide lines are shown at the level of the trailer hitch.

Trailer view (if trailer hitch is fitted)

The side cameras support the manoeuvring procedure with a trailer in this view. If this view is selected, symbol 1 appears.

Side view of the mirror cameras
The sides of the vehicle can be seen in this view.

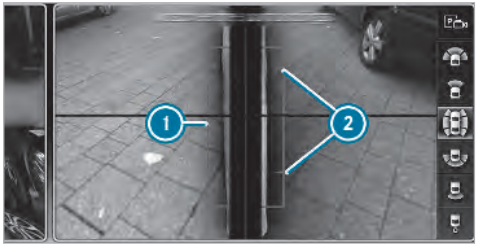

1 Guide line of external vehicle dimensions with outside mirrors folded out
2 Marker of the wheel contact points

System limitations

The 360° Camera will not function or will only partially function in the following situations:

- The doors are open.
- The side mirrors are folded in.
- The tailgate is open.
- There is heavy rain, snow or fog.
- The light conditions are poor, e.g. at night.
- The camera lens is obstructed, dirty or misted up.
- Cameras, or vehicle components in which the cameras are fitted, are damaged. In this event, have the cameras, their positions and their setting checked at a qualified specialist workshop.

Do not use the 360° Camera under such circumstances. You could otherwise injure others or collide with objects when parking the vehicle.

On vehicles with height-adjustable suspension or if the vehicle is carrying a heavy load, leaving the standard height can result in inaccuracies in the guide lines and in the display of the generated images, depending on technical conditions.

The field of vision and other functions of the camera system may be restricted due to additional attachments on the rear of the vehicle (e.g. licence plate bracket, bicycle rack).

See the notes on cleaning the 360° Camera (→ page 384).

Selecting a view for the 360° Camera

Requirements:

- The Auto reversing camera function is activated in the multimedia system (→ page 205).

▶ Engage reverse gear.

▶ In the multimedia system, select the desired view.

Switching reversing camera automatic mode on/off

The reversing camera is only an aid. It is not a substitute for your attention to the surroundings. The responsibility for safe manoeuvring and parking remains with you. Make sure that no persons, animals or objects etc. are in the manoeuvring range. Pay attention to your surroundings and be ready to brake at all times.

Multimedia system:

↳ [⌂] ▸▸ Settings ▸▸ Fahrzeug (Vehicle) ▸▸ Rear view camera

▶ Switch Auto reversing camera on or off.

Opening the camera cover of the reversing camera

Multimedia system:

↳ [⌂] ▸▸ Settings ▸▸ Fahrzeug (Vehicle) ▸▸ Rear view camera

▶ Select Open camera cover.

ⓘ The camera cover closes automatically after some time or after an ignition cycle.

Setting the camera as a favourite

You can call up the camera view directly in the multimedia system by setting it as a favourite.

▶ Press the [⌂] button on the touchpad.
The main functions are displayed.

▶ Navigate downwards twice.
The Favourites menu appears.

▶ Select New favourite.

▶ Select Vehicle.

▶ Select Camera.

Active Parking Assist

Function of Active Parking Assist

Active Parking Assist is an electronic parking assistance system which uses ultrasound and is automatically activated during forward travel. The system is operational at speeds of up to approximately 35 km/h. When all the conditions are fulfilled, the [P] symbol appears in the display of the multimedia system and the system automatically searches for and measures parking spaces on both sides of the vehicle parallel and perpendicular to the direction of travel. If Active Parking Assist is activated, suitable parking spaces are shown in the display of the multimedia system. The [P] symbol appears in the display of the multimedia system. The arrows show on which side of the carriageway free parking spaces are located.

The parking space and, if necessary, the parking direction can be selected as desired. Active Parking Assist calculates a suitable vehicle path and assists you in parking and exiting the parking space.

Active Parking Assist changes gear, accelerates, brakes and steers the vehicle.

Active Parking Assist is only an aid. It is not a substitute for your attention to the surroundings. The responsibility for safe manoeuvring and parking remains with you. Make sure that no persons, animals or objects etc. are in the manoeuvring range.

Active Parking Assist is cancelled if, among other things, one of the following actions is carried out:

- You deactivate Parking Assist PARKTRONIC.
- You deactivate Active Parking Assist.
- You begin steering.
- You apply the parking brake.
- You engage transmission position P.
- ESP® intervenes.
- You open the doors or the boot lid while driving.

System limitations

Objects located above or below the detection range of Active Parking Assist are not detected when the parking space is being measured. These are also not taken into account when the parking manoeuvre is calculated, e.g. overhanging loads, overhangs or loading ramps of lorries or the boundaries of parking spaces. In some circumstances, Active Parking Assist may therefore guide you into the parking space prematurely.

⚠ **WARNING** Risk of accident due to objects located above or below the detection range of Active Parking Assist

If there are objects above or below the detection range, the following situations may arise:

- Active Parking Assist may steer too early.
- **Vehicles with automatic transmission:** The vehicle may not stop in front of these objects.

This could cause a collision.

▶ In these situations, do not use Active Parking Assist.

Snowfall or heavy rain may lead to a parking space being measured inaccurately. Parking spaces that are partially occupied by trailer drawbars might not be identified as such or be measured incorrectly. Only use Active Parking Assist on level, high-grip ground.

Do not use Active Parking Assist in the following situations:

- In extreme weather conditions such as ice, packed snow or in heavy rain.
- If you are transporting a load that protrudes beyond the vehicle.
- If the parking space is on a steep downhill or uphill gradient.
- If you have installed snow chains.

Active Parking Assist may also display parking spaces that are not suitable for parking, e.g.:

- Parking spaces where parking is prohibited.
- Parking spaces on unsuitable surfaces.

Active Parking Assist will not assist you with parking spaces at right angles to the direction of travel in the following situations:

- If two parking spaces are located immediately next to each other.

- If the parking space is directly next to a low obstacle such as a low kerb.

Active Parking Assist will not assist you with parking spaces at right angles to the direction of travel in the following situations:

- If the parking space is on a kerb.
- If the parking space is bordered by an obstacle, e.g. a tree, a post or a trailer.

Parking with Active Parking Assist

ⓘ Depending on the vehicle's equipment, the button may also be located at a different position in the centre console.

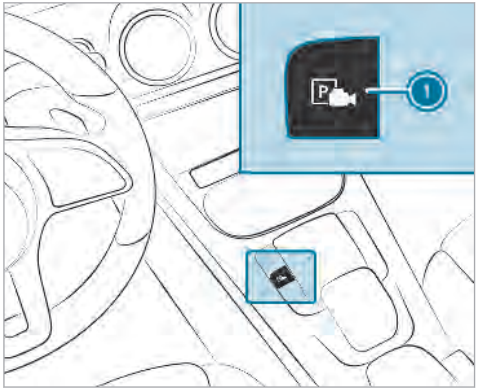

▶ Press button ①.
The Active Parking Assist view appears on the multimedia system display. Area ② displays detected parking spaces ④ and vehicle path ③.

ⓘ Vehicle path ③ shown on the multimedia system display may differ from the actual vehicle path.

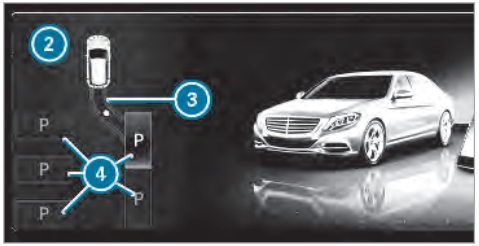

▶ If you have driven past a suitable parking space: bring the vehicle to a standstill.

▶ Select desired parking space ④.

▶ Where necessary, select the parking direction: forwards or reverse.
Vehicle path ③ is shown, depending on the selected parking space and parking direction.

▶ Confirm the selected parking space.

WARNING Risk of accident due to vehicle swinging out while parking or pulling out of a parking space

While parking or exiting a parking space, the vehicle swings out and can drive onto areas of the oncoming lane.

This could cause you to collide with objects or other road users.

- Pay attention to objects and other road users.
- Where necessary, stop the vehicle or cancel the parking procedure with Active Parking Assist.

- If, for example, the message appears in the multimedia system display: select the corresponding transmission position.
  The vehicle drives into the selected parking space.
- After completion of the parking procedure, safeguard the vehicle against rolling away. When required by legal requirements or local conditions: turn the wheels towards the kerb.

ⓘ You can stop the vehicle and change the transmission position during the parking procedure. The system then calculates a new vehicle path. The parking procedure can then be continued. If no new vehicle path is available, the transmission position will be changed again. If the vehicle has not yet reached the parking space, the parking procedure will be cancelled, should a gear be changed.

Exiting a parking space with Active Parking Assist

Requirements:
You can only exit a parking space with Active Parking Assist if you have previously parked the vehicle with Active Parking Assist.

Please note that you are responsible for the vehicle and surroundings during the entire parking procedure.

- Start the vehicle.

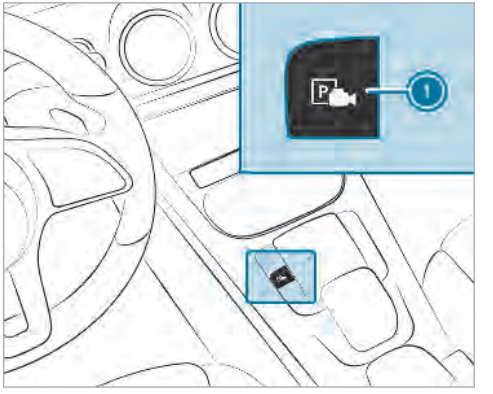

- Press button 1.
  The Active Parking Assist view appears on the multimedia system display.

▶ If the vehicle has been parked at right angles to the direction of travel: in area ②, select direction of travel ③.

ⓘ The vehicle path shown on the multimedia system display may differ from the actual vehicle path.

▶ Confirm to start the exiting process.

⚠ **WARNING** Risk of accident due to vehicle swinging out while parking or pulling out of a parking space

While parking or exiting a parking space, the vehicle swings out and can drive onto areas of the oncoming lane.

This could cause you to collide with objects or other road users.

▶ Pay attention to objects and other road users.

▶ Where necessary, stop the vehicle or cancel the parking procedure with Active Parking Assist.

▶ If, for example, the Please engage forward gear message appears in the multimedia system display: select the corresponding transmission position.
The vehicle moves out of the parking space.

Example: vehicles with 360° Camera

After the exiting procedure has been completed, the Active Parking Assist finished, take control of the vehicle. message appears in the display of the multimedia system. A warning tone and display ④ in the multimedia system prompt you to take control of the vehicle. You have to accelerate, brake, steer and change gear yourself again.

Function of Drive Away Assist

ⓘ Drive Away Assist is only available for vehicles with automatic transmission.

Drive Away Assist can reduce the severity of an impact when pulling away. If an obstacle is

detected in the direction of travel, the vehicle's speed is briefly reduced to approx. 2 km/h. If a critical situation is detected, the LIM symbol appears on the camera image of the multimedia system.

WARNING Risk of accident caused by limited detection performance of Drive Away Assist

Drive Away Assist cannot always clearly identify objects and traffic situations.

In such cases, Drive Away Assist might:

- Warn you without reason and limit the vehicle speed.
- Not warn you or not limit the vehicle speed.

▶ Always pay careful attention to the traffic situation; do not rely on Drive Away Assist alone.

▶ Be prepared to brake or swerve as necessary, provided the traffic situation permits and that it is safe to take evasive action.

Drive Away Assist is only an aid. It is not a substitute for your attention to the surroundings. The responsibility for safe manoeuvring and parking remains with you. Make sure that no persons, animals or objects etc. are in the manoeuvring range.

A risk of a collision may arise in the following situations, for example:

- If the driver mixes up the accelerator and brake pedals.
- If the wrong gear is selected.

The Drive Away Assist function is active under the following conditions:

- If Parking Assist PARKTRONIC is activated.
- Every time the gear is changed to R or D when the vehicle is at a standstill.
- If the detected obstacle is less than approx. 1.0 m away.
- If the manoeuvring assistance function is activated in the multimedia system.

System limitations

Drive Away Assist is not available on inclines and when driving with a trailer.

Function of Cross Traffic Alert

ⓘ Also read the instructions on Blind Spot Assist (→ page 216).

Vehicles with Blind Spot Assist: drivers can also be warned of any crossing traffic when reversing out of a parking space. If a critical situation is detected, the ① symbol appears in the multimedia system display. If the driver does not respond to the warning, the vehicle's brakes can be applied automatically. To do this, the function

uses the radar sensors in the bumper. The area adjacent to the vehicle is continually monitored.

Vehicles with Blind Spot Assist: drivers can also be warned of any crossing traffic when reversing out of a parking space. If a critical situation is detected, a symbol appears in the multimedia system display. If the driver does not respond to the warning, the vehicle's brakes can be applied automatically. To do this, the function uses the radar sensors in the bumper. The area adjacent to the vehicle is continually monitored.

If the radar sensors are obstructed by vehicles or other objects, detection is not possible.

The Cross Traffic Alert function is active under the following conditions:

- If Blind Spot Assist is activated.
- If the vehicle is reversing at walking pace.
- If the manoeuvring assistance function is activated in the multimedia system.

System limitations

The Cross Traffic Alert function is not available on inclines and when driving with a trailer.

Deactivating/activating manoeuvring assistance

Multimedia system:

↳ ⌂ ▸▸ Settings ▸▸ Assistance ▸▸ Camera & Park. Assist

▶ Switch Manoeuvring assist. on or off.

ⓘ Manoeuvring assistance must be active for the function of Drive Away Assist (→ page 209) and Cross Traffic Alert (→ page 210).

ATTENTION ASSIST

Function of ATTENTION ASSIST

ATTENTION ASSIST assists you on long, monotonous journeys, e.g. on motorways and trunk roads. If ATTENTION ASSIST detects indicators of fatigue or increasing lapses in concentration on the part of the driver, it suggests taking a break.

ATTENTION ASSIST is only an aid. It cannot always detect fatigue or lapses in concentration until too late. The system is not a substitute for a well-rested and attentive driver. On long journeys, take regular breaks in good time that allow for adequate recuperation.

You can choose between two settings.

- **Standard:** normal system sensitivity.
- **Sensitive:** higher system sensitivity. The driver is warned earlier and the attention level detected by ATTENTION ASSIST is adapted accordingly.

If drowsiness or increasing lapses in concentration are detected, the ATTENTION ASSIST: Take a break! warning appears in the Instrument Display. You can acknowledge the message and take a break where necessary. If you do not take a break and ATTENTION ASSIST continues to detect increasing lapses in concentration, you will be warned again after a minimum of 15 minutes.

You can have the following status information for ATTENTION ASSIST displayed in the assistance menu of the on-board computer:

- The length of the journey since the last break.
- The attention level determined by ATTENTION ASSIST:
  - the fuller the circle, the higher the attentional level determined.
  - as your attention wanes, the circle in the centre of the display becomes smaller.

If ATTENTION ASSIST is unable to calculate the attention level and cannot issue a warning, the System suspended message appears.

If a warning is given in the Instrument Display, the multimedia system offers to search for a rest area. You can select a rest area and start navigation to this rest area. This function can be activated and deactivated in the multimedia system.

If ATTENTION ASSIST is deactivated, the OFF symbol appears in the assistance graphic in the Instrument Display when the engine is running. ATTENTION ASSIST is activated automatically when the engine is re-started. The last selected sensitivity level remains stored.

System limitations

ATTENTION ASSIST is active in the 60 km/h to 200 km/h speed range.

The functionality of ATTENTION ASSIST is restricted, and warnings may be delayed or not occur at all in the following situations:

- If you have been driving for less than 30 minutes.
- If the road condition is poor (uneven road surface or potholes).
- If there is a strong side wind.
- If you adopt a sporty driving style (high cornering speeds or high rates of acceleration).
- If the Steering Assist function of Active Distance Assist DISTRONIC is active.
- If the time has been set incorrectly.
- In active driving situations, if you change lanes and vary your speed frequently.

The ATTENTION ASSIST tiredness or alertness assessment is deleted and restarted when continuing the journey in the following situations:

- If you switch off the engine.
- If you unfasten your seat belt and open the driver's door (e.g. changing drivers or taking a break).

Setting ATTENTION ASSIST
Multimedia system:
→ [⌂] ▸▸ Settings ▸▸ Assistance ▸▸ Attention Assist

Setting options

▶ Select Standard, Sensitive or Off.

Suggesting a rest area

▶ Select Suggest rest area.
▶ Activate or deactivate the function.
If ATTENTION ASSIST detects fatigue or increasing lack of attention, it suggests a rest area in the vicinity.
▶ **Select a suggested rest area.**
You are guided to the selected rest area.

Speed Limit Assist

Function of Speed Limit Assist

ⓘ The availability of the following function is country-dependent.

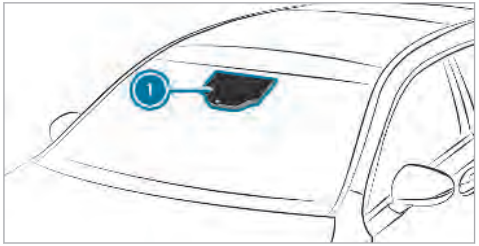

Speed Limit Assist detects speed limits with multifunction camera ① and displays these in the instrument cluster or optionally in the head-up display. The camera also detects speed limits with a restriction indicated by an additional sign (e.g. in wet conditions). The system detects stop signs thereby preventing the ECO start/stop function from switching off the engine.

Warning when the maximum permissible speed is exceeded
The system can warn you if you unintentionally exceed the maximum permissible speed. To do this, you can specify in the multimedia system by how much the maximum permissible speed can be exceeded before a warning is issued. You can specify whether the warning is to be just a visual warning or an acoustic one as well.

Display in the Instrument Display

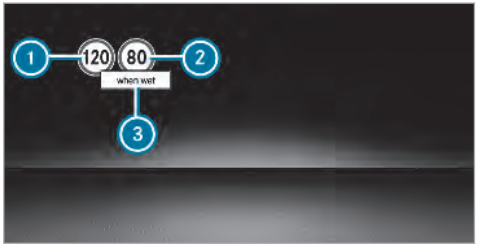

① Permissible speed
② Permissible speed when there is a restriction
③ Additional sign with restriction

ⓘ The illustration shows the Instrument Display in the Widescreen Cockpit

System limitations

The system may be impaired or may not function in the following situations:

- If there is poor visibility, e.g. due to insufficient illumination of the road, highly variable shade conditions, or due to rain, snow, fog or heavy spray.
- If there is glare, e.g. from oncoming traffic, direct sunlight or reflections.
- If there is dirt on the windscreen in the vicinity of the multifunction camera or the camera is misted up, damaged or obscured.
- If the traffic signs are hard to detect, e.g. due to dirt or snow, or because they are covered or due to insufficient lighting.

Traffic Sign Assist

Function of Traffic Sign Assist

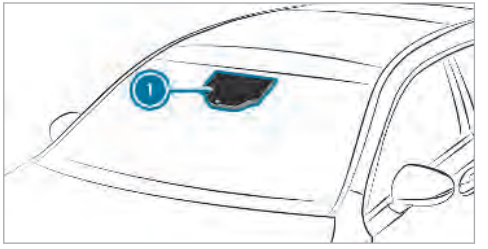

Traffic Sign Assist detects traffic signs with multifunction camera 1. It assists you by displaying detected speed limits and overtaking restrictions in the instrument cluster and optionally in the head-up display.

Since Traffic Sign Assist also uses the data stored in the navigation system, it can update the display in the following situations without detecting traffic signs:

- When the vehicle changes roads, e.g. slip road or motorway exit.
- When a village or town boundary is passed which is stored in the digital map.

ⓘ Depending on the country, this function is also available without the navigation system.

If the system detects that you are driving onto a section of road in the wrong direction of travel, it triggers a warning.

The camera also detects traffic signs with a restriction indicated by an additional sign (e.g. in wet conditions).

Warning when the maximum permissible speed is exceeded

The system can warn you if you unintentionally exceed the maximum permissible speed. To do this, you can specify in the multimedia system by how much the maximum permissible speed can be exceeded before a warning is issued. You can specify whether the warning is to be just a visual warning or an acoustic one as well.

Display in the Instrument Display

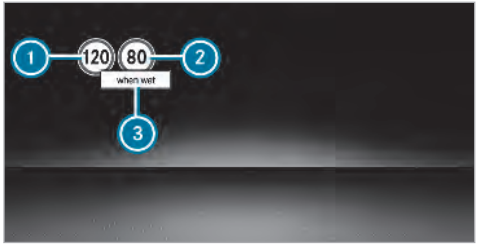

1. Permissible speed
2. Permissible speed when there is a restriction
3. Additional sign with restriction

ⓘ The illustration shows the Instrument Display in the Widescreen Cockpit

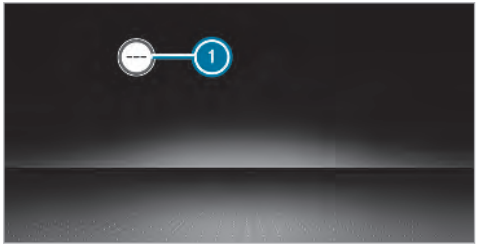

Traffic Sign Assist is not available in all countries. If it is unavailable, display 1 is shown in the speedometer.

Warning when approaching pedestrian crossings

Vehicles with Driving Assistance Package: the system can warn you if you approach a pedestrian crossing with your vehicle. A message appears in the instrument cluster.

The warning occurs if appropriate traffic signs or road markings are detected and pedestrians are present in the danger zone.

System limitations

The system may be impaired or may not function in the following situations:

- If there is poor visibility, e.g. due to insufficient illumination of the road, highly variable shade conditions, or due to rain, snow, fog or heavy spray.
- If there is glare, e.g. from oncoming traffic, direct sunlight or reflections.

- If there is dirt on the windscreen in the vicinity of the multifunction camera or the camera is misted up, damaged or obscured.
- If the traffic signs are hard to detect, e.g. due to dirt or snow, or because they are covered, or due to insufficient lighting.
- If the information in the navigation system's digital map is incorrect or out-of-date.
- If the signs are ambiguous, e.g. traffic signs on construction sites or in adjacent lanes.

Setting Traffic Sign Assist

Multimedia system:

→ ⌂ ▸▸ Settings ▸▸ Assistance ▸▸ Traffic Sign Assist

Activating/deactivating automatic adoption of speed limits

Requirements:

- Active Distance Assist DISTRONIC is activated.

▶ Select Adopt limit.

▶ Activate or deactivate the function.
The speed limits detected by Traffic Sign Assist are automatically adopted by Active Distance Assist DISTRONIC.

Displaying detected traffic signs in the media display

▶ Select Display in head unit.

▶ Activate or deactivate the function.

Adjusting the type of warning

▶ Select Visual & audible, Visual or None.

Adjusting the warning threshold

This value determines the speed at which a warning is issued when exceeded.

▶ Select Warning threshold.

▶ Set the desired speed.

Blind Spot Assist and Active Blind Spot Assist

Function of Blind Spot Assist and Active Blind Spot Assist with exit warning

Blind Spot Assist and Active Blind Spot Assist use two lateral, rear-facing radar sensors to monitor the area up to 40 m behind your vehicle and 3 m directly next to your vehicle.

If a vehicle is detected at speeds above approximately 12 km/h and this vehicle subsequently enters the monitoring range directly next to your vehicle, the warning lamp in the outside mirror lights up red.

If a vehicle is detected close to your vehicle in the lateral monitoring range and you switch on the turn signal indicator in the corresponding direction, a warning tone sounds once. The red warning lamp in the outside mirror flashes. If the turn signal indicator remains switched on, all other detected vehicles are indicated only by the flashing of the red warning lamp.

If you overtake a vehicle quickly, no warning is given.

⚠ **WARNING** Risk of accident despite Blind Spot Assist

Blind Spot Assist does not react to vehicles approaching and overtaking you at a greatly different speed.

As a result, Blind Spot Assist cannot warn drivers in this situation.

▶ Always pay careful attention to the traffic situation and maintain a safe distance at the side of the vehicle.

Blind Spot Assist and Active Blind Spot Assist are only aids. They may fail to detect some vehicles and are no substitute for attentive driving. Always ensure that there is sufficient distance to the side for other road users and obstacles.

Exit warning

The exit warning is an additional function of Blind Spot Assist and can warn vehicle occupants about approaching vehicles when leaving the vehicle when stationary.

If there is a vehicle in the monitoring range, this is indicated in the outside mirror. If a vehicle occupant opens the door on the side with the warning, a warning tone sounds and the warning lamp in the outside mirror starts to flash.

This additional function is only available when Blind Sport Assist is activated and up to a maximum of three minutes after the ignition has been switched off. The exit warning is no longer available once the warning lamp in the outside mirror flashes three times.

The exit warning is only an aid is not a substitute for the attention of vehicle occupants. The responsibility for opening and closing the doors and for leaving the vehicle remains with the vehicle occupants.

System limitations

Blind Spot Assist and Active Blind Spot Assist may be limited in the following situations:

- There is dirt on the sensors or the sensors are obscured.
- When there is poor visibility, e.g. due to fog, heavy rain, snow or spray.
- If narrow vehicles are within the monitoring range, e.g. bicycles.

Warnings may be issued in error when driving close to crash barriers or similar solid lane borders. Warnings may be interrupted when driving alongside long vehicles, for example lorries, for a prolonged time.

Blind Spot Assist is not operational when reverse gear is engaged.

Blind Spot Assist is not operational when a trailer is coupled to the vehicle and the electrical connection has been correctly established.

The exit warning may be limited in the following situations:

- When the sensors are covered by adjacent vehicles in narrow parking spaces
- When people approach the vehicle

Stationary or slow-moving objects are not indicated.

Function of brake application (Active Blind Spot Assist)

If Active Blind Spot Assist detects a risk of a side impact in the monitoring range, a course-correcting brake application is carried out. This is designed to help you avoid a collision.

The course-correcting brake application is available in the speed range between approximately 30 km/h and 200 km/h.

WARNING Risk of accident despite brake application of Active Blind Spot Assist

A course-correcting brake application cannot always prevent a collision.

- Always steer, brake or accelerate yourself, especially if Active Blind Spot Assist warns you or makes a course-correcting brake application.
- Always maintain a safe distance at the sides.

WARNING Risk of accident despite Active Blind Spot Assist

Active Blind Spot Assist does not react to the following:

- Overtaking vehicles closely on the side, placing them in the blind spot area.
- Vehicles approaching and overtaking you at a very different speed.

As a result, Active Blind Spot Assist may neither give warnings nor intervene in such situations.

- Always pay careful attention to the traffic situation and maintain a safe distance at the side of the vehicle.

If a course-correcting brake application occurs, the red warning lamp flashes in the outside mirror and a warning tone sounds. In addition, display 1 indicating the danger of a side collision appears in the multifunction display.

In rare cases, the system may make an inappropriate brake application. This brake application may be interrupted at any time if you steer slightly in the opposite direction or accelerate.

System limitations

Either a course-correcting brake application appropriate to the driving situation, or none at all, may occur in the following situations:

- Vehicles or obstacles, e.g. crash barriers, are located on both sides of your vehicle.
- A vehicle approaches too closely on the side.
- You have adopted a sporty driving style with high cornering speeds.
- You brake or accelerate significantly.
- A driving safety system intervenes, such as ESP® or Active Brake Assist.
- ESP® is deactivated.
- A loss of tyre pressure or a defective tyre is detected.
- You are driving with a trailer and the electrical connection to the trailer hitch has been correctly established.

Activating/deactivating Blind Spot Assist or Active Blind Spot Assist

Multimedia system:

→ ⌂ ▸▸ Settings ▸▸ Assistance

▶ Activate or deactivate Blind Spot Assist.

Active Lane Keeping Assist

Active Lane Keeping Assist function

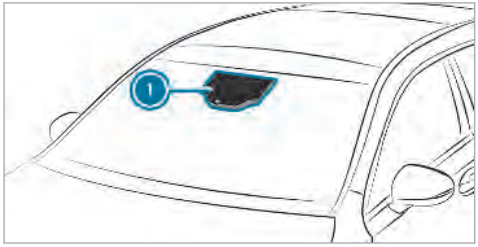

Active Lane Keeping Assist monitors the area in front of your vehicle by means of multifunction camera (1). It serves to protect you against unintentionally leaving your lane. You will be warned by vibration pulses in the steering wheel and guided by a course-correcting brake application back into your lane.

You are warned by vibration pulses in the steering wheel in the following circumstances:

- Active Lane Keeping Assist detects lane markings.
- A front wheel passes over the lane markings.

You will also be guided back into your lane by means of a course-correcting brake application if the following conditions are met:

- Active Lane Keeping Assist detects lane markings.
- A front wheel drives over a solid lane marking.

You can activate or deactivate the Active Lane Keeping Assist warning.

If you fail to adapt your driving style, Active Lane Keeping Assist can neither reduce the risk of an accident nor override the laws of physics. It cannot take into account road, weather or traffic conditions. Active Lane Keeping Assist is only an aid. You are responsible for the distance to the vehicle in front, for vehicle speed, for braking in good time and for staying in lane.

if the lane markings are solid lines, a lane-correcting brake application can bring the vehicle back into the original lane.

Vehicles with Driving Assistance package: Active Lane Keeping Assist can bring the vehicle back into the lane with a lane correcting brake application. In the case of a broken lane marking being detected, a brake application will only be made if a vehicle has been detected in the adjacent lane. Oncoming vehicles, overtaking vehicles and vehicles in adjacent lanes can be detected.

The brake application is available in the speed range between 60 km/h and 200 km/h.

If a lane-correcting brake application occurs, display 1 appears in the multifunction display.

System limitations

No lane-correcting brake application occurs in the following situations:

- You clearly and actively steer, brake or accelerate.
- You have switched on the turn signal indicator (situation dependent).
- A driving safety system intervenes, such as ESP®, Active Brake Assist or Active Blind Spot Assist.
- You have adopted a sporty driving style with high cornering speeds or high rates of acceleration.
- ESP® is deactivated.
- When driving with a trailer, the electrical connection to the trailer has been correctly established.
- If a loss of tyre pressure or a defective tyre has been detected and displayed.

The system may be impaired or may not function in the following situations:

- If there is poor visibility, e.g. due to insufficient illumination of the road, highly variable shade conditions, or due to rain, snow, fog or heavy spray.
- There is glare, e.g. from oncoming traffic, the sun or reflections.
- If there is dirt on the windscreen in the vicinity of the multifunction camera or the camera is misted up, damaged or obscured.
- No or several, unclear lane markings are present for one lane, e.g. near roadworks.
- The lane markings are worn, dark or covered.
- The distance to the vehicle in front is too small and the lane markings thus cannot be detected.
- The lane markings change quickly, e.g. lanes branch off, cross one another or merge.
- The carriageway is very narrow and winding.

Vehicles with Driving Assistance package: Active Lane Keeping Assist uses radar sensors to monitor several areas around the vehicle. If the radar sensors in the rear bumper are dirty or covered with snow, the system may be impaired or may not function. If an obstacle in the lane in which you are driving has been detected, no lane-correcting brake application occurs.

Activating/deactivating Active Lane Keeping Assist

Multimedia system:

→ ⌂ ▸▸ Settings ▸▸ Schnellzugriff (Quick access) ▸▸ Active Lane Keeping Assist

▶ Activate or deactivate the function.

Sensitivity of Active Lane Keeping Assist

ⓘ The availability of the following function is country-dependent.

With the standard or sensitive setting, you can adjust the sensitivity of Active Lane Keeping Assist. In the sensitive setting, there are additional situations in which Active Lane Keeping Assist intervenes. The likelihood of intervention is therefore higher.

Setting Active Lane Keeping Assist

Multimedia system:

→ [⌂] ▸▸ Settings ▸▸ Assistance ▸▸ Act. Lane Keep. Assist

Setting the sensitivity

ⓘ The availability of this function is dependent on the country.

▶ Select Standard or Sensitive.

Activating/deactivating the haptic warning

▶ Select Warning.
The haptic warning is deactivated.

Trailer hitch

Trailer operation notes

Observe the following notes on the tongue weight:

- use a tongue weight as close as possible to the maximum tongue weight
- do not use a tongue weight that exceeds or falls below the permissible tongue weight

Do not exceed the following values:

- the permissible towing capacity
- the permissible rear axle load of the towing vehicle
- the permissible gross mass of the towing vehicle
- the permissible gross mass of the trailer
- the maximum permissible speed of the trailer

Make sure of the following before starting a journey:

- the tyre pressure on the rear axle of the towing vehicle is set for a maximum load
- the lighting of the connected trailer is operational
- **Vehicles without LED headlamps or MULTIBEAM LED headlamps:** The headlamps have been set correctly.

In the event of increased rear axle load, the car/trailer combination may not exceed a maximum speed of 100 km/h for reasons concerning the operating permit. This also applies in countries in which the permissible maximum speed for car/trailer combinations is above 100 km/h.

Folding the ball neck out/in

⚠ **WARNING** Risk of accident due to the ball neck not being engaged

If the ball neck is not engaged, the trailer may come loose.

▶ Always engage the ball neck as described.

WARNING Risk of injury from ball neck swinging outwards

The ball neck may swing outwards when unlocking or when it has not been properly engaged.

There is a risk of injury within the ball neck's range of movement!

- Unlock the ball neck only when its range of movement is unobstructed.
- Always be sure the ball neck is engaged when folding inwards.

Requirements:

Before folding the ball neck out/in, make sure of the following:

- Shift the transmission to position P or N.
- The range of movement is clear.
- **Only when folding in:** ensure trailer cables or adapter plugs have been removed.

Folding the ball neck out

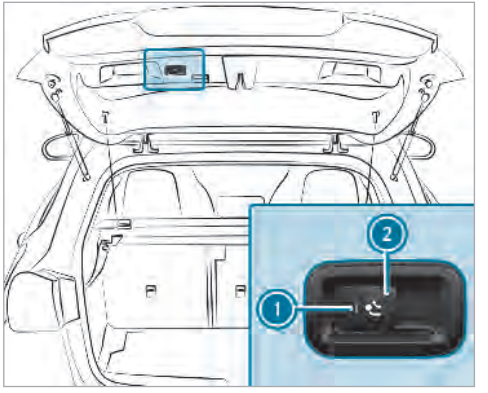

- Pull release switch 2 until the ball neck unlocks.
  The ball neck folds out from under the rear bumper.
  Indicator lamp 1 flashes.

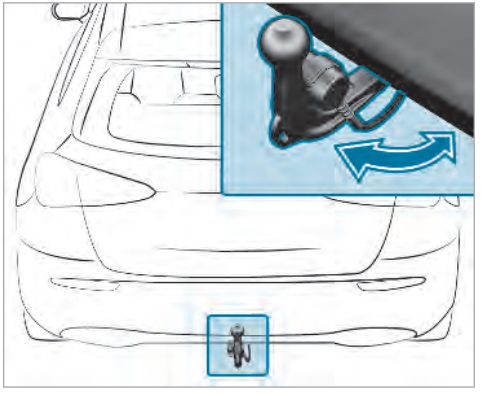

- Pull the ball neck in the direction of the arrow until it engages audibly in a vertical position.
  Indicator lamp 1 in the ball neck release switch goes out.
  If the ball neck is not securely locked in place, the Trailer coupling Check lockdisplay message appears on the multifunction display.

▶ Remove the cover from the ball head and store it in a safe place.

Make sure that the ball of the ball neck is clean. Check that it is either greased or dry (grease free), depending on the instructions for the trailer.

Folding the ball neck in

▶ Pull release switch ② until the ball neck unlocks.
The ball neck folds up under the rear bumper.

Indicator lamp ① flashes.

▶ Press the ball neck in the direction of the arrow until it engages audibly behind the bumper.
Indicator lamp ① goes out and the message on the multifunction display disappears.

Observe the information on the displays in the instrument cluster:

- Warning and indicator lamps (→ page 496)
- Display messages (→ page 443)

Coupling up/uncoupling a trailer

Requirements:

- the ball neck must be extended and engaged in the securely locked position.

Trailers with a 7-pin plug can be connected to the vehicle with the following adapters:

- adapter plug
- adapter cable

The trailer will be correctly detected by the vehicle only if the following conditions are met:

- the trailer is connected correctly
- the trailer lighting system is in working order

The operation of the following systems depends on the trailer being connected correctly:

- Active Lane Keeping Assist
- ESP®
- Parking Assist PARKTRONIC
- Active Parking Assist
- Blind Spot Assist or Active Blind Spot Assist

Coupling up a trailer

! NOTE Damage to the battery due to full discharge

Charging the trailer battery using the power supply of the trailer can damage the battery.

▶ Do not use the power supply to charge the trailer battery.

▶ Remove the cover from the ball head and store it in a safe place (→ page 98).

▶ Position the trailer on a level surface behind the vehicle and couple it up to the vehicle.

- Open the socket cover.
- Insert the plug connector with lug ① into groove ③ on the socket.
- Turn bayonet coupling ② clockwise as far as it will go.
- Let the cover engage.
- Secure the cable to the trailer with cable ties (if you are using an adapter cable).
- Make sure that cable is always slack for ease of movement during cornering.
- Push the combination switch upwards and downwards and check whether the corresponding turn signal light on the trailer is flashing.

A display message may appear on the multifunction display even if the trailer has been connected correctly:

- LEDs have been installed on the trailer lighting system
- the current has fallen below the trailer lighting system's minimum current (50 mA)

ⓘ Accessories can be connected to the permanent power supply up to 180 W, and to the power supply that is switched on via the ignition lock.

Uncoupling a trailer

⚠ **WARNING** Risk of being crushed and becoming trapped when uncoupling a trailer

When uncoupling a trailer with an engaged inertia-activated brake, your hand may become trapped between the vehicle and the trailer drawbar.

- Do not uncouple trailers with an engaged overrun brake.

! **NOTE** Damage to the rear bumper from installing adapter cables or adapter plugs

The following parts could be damaged when retracting the ball neck fully electrically:

- bumper
- adapter cable
- adapter plug

- Always remove the adapter cable or adapter plug before retracting the ball neck fully electrically.

- Safeguard the trailer against rolling away.
- Disconnect the electrical connection between the vehicle and the trailer.
- Uncouple the trailer.
- Place the cover on the ball head.

Bicycle rack function

⚠ **WARNING** Risk of an accident when using the bicycle rack incorrectly

The bicycle rack may become detached from the vehicle in the following cases:

- the permissible load capacity of the trailer hitch is exceeded.

- the bicycle rack is used incorrectly.
- the bicycle rack is secured to the ball neck beneath the ball head.

Observe the following for your own safety and that of other road users:

▶ always adhere to the permissible load capacity of the trailer hitch.

▶ only use the bicycle rack to transport bicycles.

▶ always properly secure the bicycle rack by attaching it to the ball head.

▶ only use bicycle racks approved by Mercedes-Benz.

▶ always observe the bicycle rack operating instructions.

! **NOTE** Damage to, or cracks on, the trailer hitch due to unsuitable bicycle racks or bicycle racks being used incorrectly

▶ use only bicycle racks approved by Mercedes-Benz.

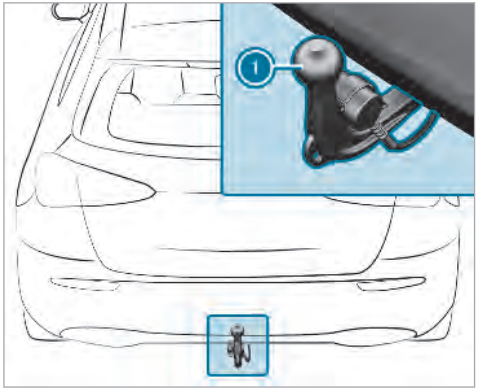

Depending on the bicycle rack's design, up to three bicycles can be transported on the bicycle rack:

- when mounted by attaching to ball head 1, the maximum load capacity is 75 kg. Up to three bicycles can be transported.

The load capacity is calculated from the weight of the bicycle rack and the bicycle rack load.

The vehicle's handling characteristics change when a bicycle rack is fitted. The vehicle:

- is heavier.
- is restricted in its acceleration -and gradeability.
- has an increased braking distance.

This can impair the vehicle's handling characteristics. Adapt your driving style accordingly. Drive carefully and maintain a safe distance.

When using a bicycle rack, set the tyre pressure for maximum load on the rear axle of the vehicle. Further information on the tyre pressure can be found in the tyre pressure table (→ page 410).

Notes on loads

The larger the distance between the load's centre of gravity and the ball head, the greater the load on the trailer hitch.

Observe the following notes:

- mount heavy bicycles as close to the vehicle as possible.

- always distribute the load on the bicycle rack as evenly as possible across the vehicle's longitudinal axis.

Mercedes-Benz recommends removing all detachable parts from the bicycles, e.g. baskets, child seats or rechargeable batteries, before loading them onto the bicycle rack. This improves the wind resistance and centre of gravity of the bicycle rack.

Always secure the bicycles to prevent them from moving around and check they are secured at regular intervals.

Do not use tarpaulins or other covers. The handling characteristics and rear view may be impaired. In addition, the wind resistance and load on the trailer hitch increase.

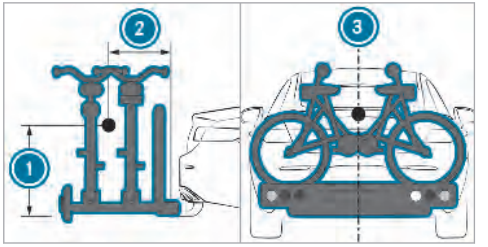

Distribution of the load on the bicycle rack

1. Vertical distance between the centre of gravity and ball head
2. Horizontal distance between centre of gravity and ball head
3. The centre of gravity is on the vehicle's central axis

Observe the following information when loading the bicycle rack:

Number of bicycles	Total weight of bicycle rack and load	Max. distance 1	Max. distance 2
3	Up to 75 kg	420 mm	300 mm

Vehicle towing instructions

The vehicle is not suitable for attaching tow-bar systems, which are used for flat towing or dinghy towing, for example. Attaching and using tow-bar systems can lead to damage on the vehicle. When towing a vehicle with tow-bar systems, safe, dynamic driving behaviour of the towing vehicle and the vehicle being towed is not guaranteed. The vehicle-trailer combination can swerve from side to side. Comply with the permitted towing methods (→ page 400) and the instructions for towing with both axles on the ground (→ page 401).

Instrument display overview

WARNING Risk of accident due to an instrument display malfunction

If the instrument display has failed or is malfunctioning, you may not recognise function restrictions and warning notices of safety relevant systems.

The operating safety of your vehicle may be impaired.

- ▶ If the traffic situation allows it, continue driving carefully.
- ▶ Have the vehicle checked immediately at a qualified specialist workshop.

Instrument display (standard)

1. Speedometer (example)
2. Multifunction display
3. Fuel level and fuel filler flap location indicator

Further content can also be shown on the multifunction display 2:

- Assistant display
- Telephone
- Navigation
- Trip
- Radio
- Media
- Vehicle dynamics
- Designs
- Service

Instrument display in the widescreen cockpit

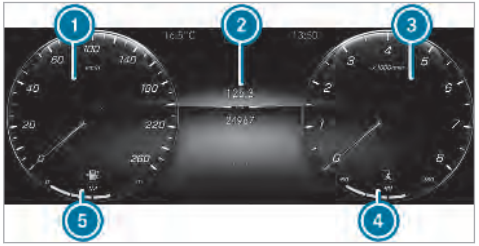

1. Speedometer (example)
2. Multifunction display
3. Rev counter (example)
4. Coolant temperature display
5. Fuel level and fuel filler flap location indicator

ⓘ In addition to the multifunction display ②, further content can also be shown on displays ① and ③ (→ page 230).

The segments on speedometer ① indicate the status of the following systems:

- Cruise control (→ page 179)
- Limiter (→ page 180)
- Active Distance Assist DISTRONIC (→ page 183)

! NOTE Engine damage due to excessively high engine speeds

The engine will be damaged if you drive with the engine in the overrevving range.

▶ Do not drive with the engine in the overrevving range.

The fuel supply is interrupted to protect the engine when the red mark on the rev counter (overrevving range) is reached.

Vehicles with widescreen cockpit: during normal operating conditions, the coolant temperature display may rise to 120 °C.

⚠ WARNING Danger of burns when opening the bonnet

If you open the engine bonnet when the engine has overheated or during a fire in the engine compartment, you could come into contact with hot gases or other escaping operating fluids.

▶ Before opening the bonnet, allow the engine to cool down.

▶ In the event of a fire in the engine compartment, keep the engine bonnet closed and call the fire service.

Overview of the buttons on the steering wheel

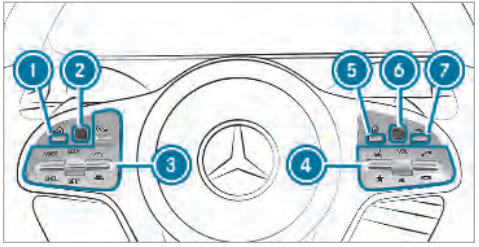

① Back button, on-board computer
② Touch Control, on-board computer
③ Control panel for cruise control/limiter or Active Distance Assist DISTRONIC
④ Control panel for MBUX multimedia system:
LINGUATRONIC or voice control system
★ Displays favourites
VOL: control knob, adjusts the volume or switches the sound off
Makes/accepts a call

Rejects/ends a call
5 Calls up the home screen
6 Touch Control
7 Back button

Operating the on-board computer

WARNING Risk of distraction from information systems and communications equipment

If you operate information and communication equipment integrated in the vehicle when driving, you will be distracted from the traffic situation. This could also cause you to lose control of the vehicle.

- Only operate this equipment when the traffic situation permits.
- If you cannot be sure of this, stop the vehicle whilst paying attention to road and traffic conditions and operate the equipment with the vehicle stationary.

You must observe the legal requirements for the country in which you are currently driving when operating the on-board computer.

ⓘ The on-board computer displays appear on the multifunction display (→ page 231).

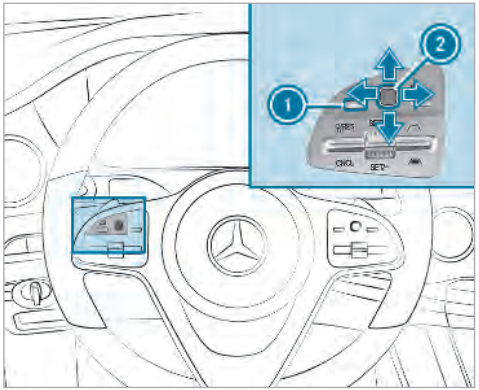

The on-board computer can be operated using Touch Control 2 and back button 1 on the left-hand side of the steering wheel.

Different acoustic signals provide feedback when operating the on-board computer, e.g:

- reaching the end of a list
- scrolling through a list

The following menus are available:

- Assistenz
- Telefon
- Navigation
- Reise
- Radio
- Medien
- STILE & ANZEIGE
- Service

The menus can be called up from the menu bar on the multifunction display.

- **To call up the menu bar:** press back button 1 on the left repeatedly or press and hold once.

ⓘ **Vehicles without Active Distance Assist DISTRONIC:** press the [⌂] button to call up the menu bar of the on-board computer.

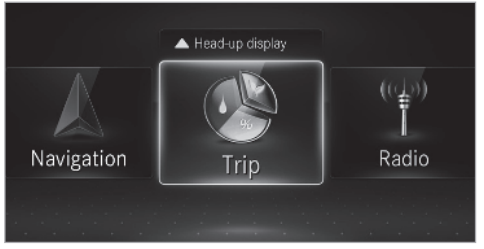

- ▶ **To scroll in the menu bar:** swipe to the left or right on the left-hand Touch Control ②.
- ▶ **To call up the menu or confirm the selection:** press the left-hand Touch Control ②.
- ▶ **To scroll through displays or lists on the menu:** swipe upwards or downwards on the left-hand Touch Control ②.
- ▶ **To call up a submenu or confirm the selection:** press the left-hand Touch Control ②.
- ▶ **To exit a submenu:** press the back button on the left ①.

If you are browsing a submenu and you press and hold the back button on the left ①, the menu bar appears.

Selecting head-up display

- ▶ Select the HEAD-UP DISPLAY menu: in the menu bar, swipe upwards on the left-hand Touch-Control ②.
- ▶ Press the left-hand ② touch control.

Full-surface menu display

Vehicles with an instrument display in the widescreen cockpit: the following menus can be shown in full on the instrument display:

- Assistenz
- Reise
- Performance

- ▶ In the corresponding menu, use left-hand Touch Control ② to scroll to the end of the list.
- ▶ Press the left-hand ② touch control. The selected menu is displayed in full.

Setting the multifunction display

Vehicles with an instrument display in the widescreen cockpit: further display content can be show on the instrument display.

① Display content, right (example rev counter)
② Index points

- ▶ **To select display content:** swipe to the right on the left-hand Touch Control.

▶ Swipe upwards or downwards on the left-hand Touch Control to select the required display content.
When the display content is selected ①, it is briefly highlighted.

The index points ② show the selected display content.

Display content selection, left:

- Speedometer
- Time/date
- Trip computer From start and From reset
- Range
- Audio

Multifunction display selection:

- Assistant display
- Telephone
- Navigation
- Trip
- Radio
- Media
- Service

Display content selection, right:

- Rev counter
- Average fuel consumption
- ECO display
- Navigation
- G-meter
- Assistant display

Overview of displays on the multifunction display

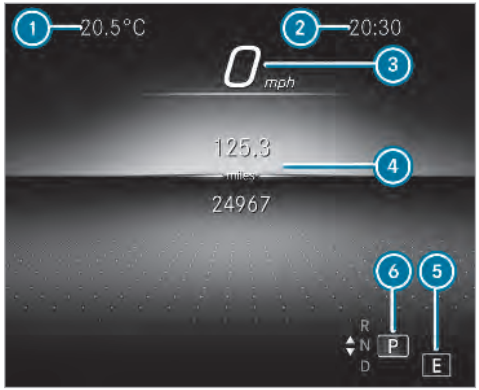

① Outside temperature
② Time
③ Display section
④ Drive program
⑤ Transmission position

ⓘ **Vehicles with standard instrument display:** the position of the displays differs from those shown here.

Further displays on the multifunction display:

- ↑ Gearshift recommendation (→ page 153)
- Active Parking Assist activated (→ page 207)
- Parking Assist PARKTRONIC deactivated (→ page 198)
- Cruise control (→ page 179)
- LIM Limiter (→ page 180)
- Active Distance Assist DISTRONIC (→ page 183)
- Active Brake Assist(→ page 178)
- ECO start/stop function(→ page 147)
- HOLD HOLD function (→ page 194)
- Adaptive Highbeam Assist (→ page 121) (→ page 121)
  Adaptive Highbeam Assist Plus (→ page 122)
- 120 km/h Maximum permissible speed exceeded (for certain countries only)

Vehicles with Traffic Sign Assist: detected instructions and traffic signs (→ page 214).

Adjusting the instrument lighting

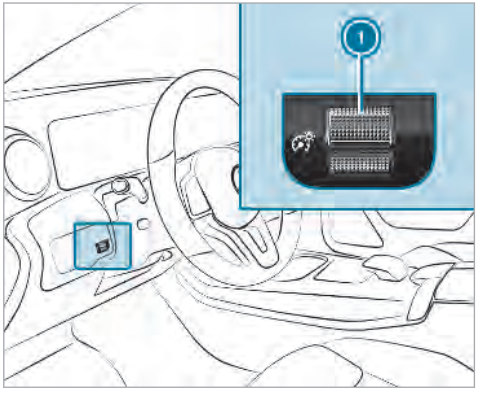

▶ Turn brightness control ① up or down.
The lighting of the instrument display and in the control elements in the vehicle interior is adjusted.

Menus and submenus

Functions on the Service menu of the on-board computer

On-board computer:

→ Service

▶ **To select the function:** swipe upwards or downwards on the left-hand touch control.

▶ Press the left-hand touch control.

Functions on the Service menu:

- Message memory (→ page 443)
- AdBlue: Adblue® range
- Tyres:
  - Restarting the tyre pressure loss warning system (→ page 417)
  - Checking tyre pressure with the tyre pressure monitoring system (→ page 412)

- Restarting the tyre pressure monitoring system(→ page 412)
- ASSYST PLUS: Calling up the service due date (→ page 374)
- Coolant: coolant temperature display
- Engine oil level: engine oil level

Calling up the assistant display

On-board computer:

→ Assistenz

The following displays are available on the assistant display menu:

- Assistant display
- Attention level (→ page 211)

▶ **To switch between the displays:** swipe upwards or downwards on the left-hand Touch Control.

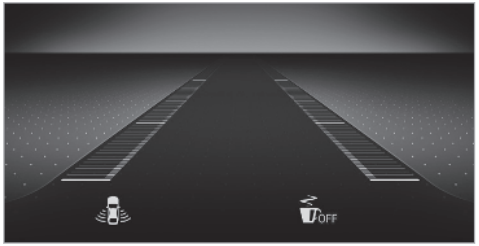

Status displays on the assistant display:

- OFF: ATTENTION ASSIST deactivated
- Light lane markings: Active Lane Keeping Assist activated
- Green lane markings: Active Lane Keeping Assist active
- Grey radar waves next to vehicle: Blind Spot Assist or Active Blind Spot Assist activated
- Green radar waves next to vehicle: Blind Spot Assist or Active Blind Spot Assist active
- Active Distance Assist DISTRONIC displays (→ page 183)

Calling up displays on the Trip menu

On-board computer:

→ Reise

▶ **To select a display:** swipe upwards or downwards on the left-hand Touch Control.

Menu Reise in the standard cockpit:

- Speedometer
- Rev counter
- Range and current fuel consumption
- ECO display (→ page 148)
- Trip computer From start and From reset

Menu Reise in the widescreen cockpit:

- Standard display
- Current fuel consumption
- ECO display (→ page 148)
- Trip computer From start and From reset
- Full-surface menu display

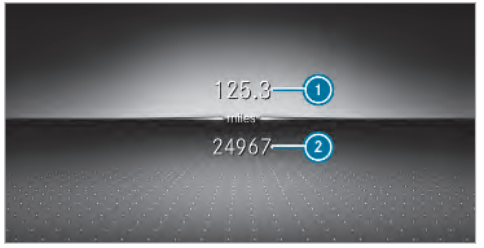

Example: standard display
1. Trip distance
2. Total distance

Example: trip computer
1. Total distance
2. Driving time
3. Average speed
4. Average fuel consumption

Resetting values on the Trip menu of the on-board computer

On-board computer:

→ Reise

You can reset the values of the following functions:

- Trip distance
- Trip computer From start and From reset
- ECO display (→ page 148)

▶ **To select the function to be reset:** swipe upwards or downwards on the left-hand touch control.

▶ Press the left-hand touch control.

▶ Select Yes .

▶ Press the left-hand touch control.

If you press and hold the left-hand touch control, the function will be reset immediately.

Calling up navigation instructions on the on-board computer

On-board computer:

→ Navigation

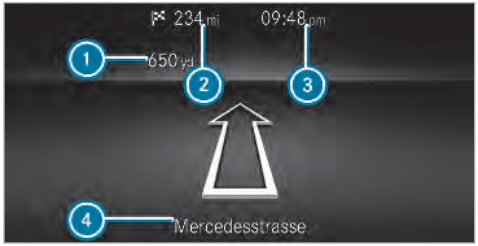

Example: no change of direction announced

1. Distance to the next change of direction
2. Distance to the next destination
3. Estimated arrival time at next destination
4. Current road

Example: change of direction announced

1. Distance to the change of direction
2. Road to which the change of direction leads
3. Change-of-direction symbol
4. Recommended lane (white)
5. Possible lane
6. Lane not recommended (dark grey)

Further possible displays in the Navigation menu:

- Fahrtrichtung: display of direction of travel and road currently being travelled on.
- New route... or Calculating route...: a new route is calculated.
- Straße nicht erfasst: the road is unknown, e.g. for newly built roads.
- No route: no route could be calculated to the selected destination.
- Off map: the map for the current location is not available.
- Area of destination reached: When an intermediate destination is reached, the intermediate destination flag is displayed with the number of the intermediate destination [ ]. After this, route guidance is continued. Once the destination is reached, the chequered flag [ ] is displayed. Route guidance is finished.

▶ **To exit the menu:** press the back button on the left.

Vehicles with the MBUX multimedia system: you can also start the navigation to one of the recent destinations on the Navigation menu:

▶ Press the left-hand touch control.

▶ **Select a destination:** swipe upwards or downwards on the left-hand touch control.

- Press the left-hand touch control.
  Route guidance is started.

  If route guidance has already been activated, a request will appear asking whether you wish to end the current route guidance.
- Select Yes.
- Press the left-hand touch control.
  Route guidance is started.

Selecting radio stations using the on-board computer

On-board computer:

→ Radio

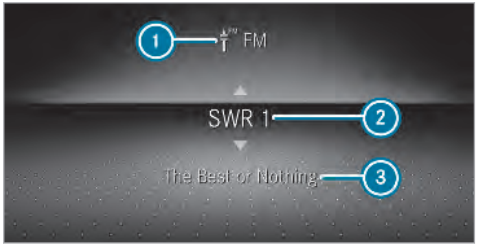

1. Frequency range
2. Station
3. Name of track

When you select a station in the memory presets, the preset appears next to the station name. When you select a saved station in the frequency range, an asterisk appears next to the station name.

- **To select a radio station:** swipe upwards or downwards on the left-hand touch control.

Selecting the frequency range or station preset

- Press the left-hand touch control.
- **To select the frequency range/station preset:** swipe upwards or downwards on the left-hand touch control.
- Press the left-hand touch control.

Media playback using the on-board computer

On-board computer:

→ Medien

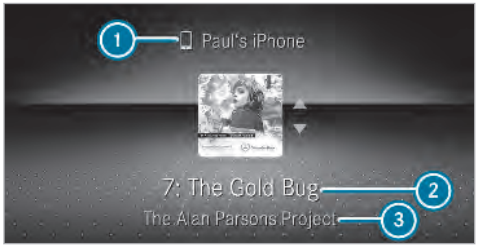

1. Media source
2. Current track and track number
3. Name of artist (example)

▶ **To change tracks on an active media source:** swipe upwards or downwards on the left-hand Touch Control.

Changing a media source

▶ Press the left-hand Touch Control.

▶ **To select a media source:** swipe upwards or downwards on the left-hand Touch Control.

▶ Press the left-hand Touch Control.

Dialling telephone numbers using the on-board computer

Requirements:

- The mobile phone is connected to the multimedia system.

On-board computer:

→ Telefon

⚠ **WARNING** Risk of distraction from information systems and communications equipment

If you operate information and communication equipment integrated in the vehicle when driving, you will be distracted from the traffic situation. This could also cause you to lose control of the vehicle.

▶ Only operate this equipment when the traffic situation permits.

▶ If you cannot be sure of this, stop the vehicle whilst paying attention to road and traffic conditions and operate the equipment with the vehicle stationary.

When telephoning, you must observe the legal requirements for the country in which you are currently driving.
The most recent telephone connections (dialled, received and missed calls) are displayed on the Medien menu.

▶ **Select an entry:** swipe upwards or downwards on the left-hand touch control.

▶ Press the left-hand touch control.
If there is only one telephone number saved to an entry: the telephone number is selected.

▶ **If there are multiple telephone numbers saved to an entry:** swipe upwards or downwards on the left-hand touch control to select the desired telephone number.

▶ Press the left-hand touch control.
The telephone number is dialled.

The following displays may appear instead of the telephone numbers dialled:

- Please wait: the application is starting. When a Bluetooth® connection to the mobile phone is not established, the menu for authorising and connecting a mobile phone is displayed in the multimedia system (→ page 330) (→ page 330).
- Daten werden aktualisiert: the call list is being updated.
- Kontakte werden importiert: the contacts from the mobile phone or from a storage medium are being imported.

Accepting/rejecting a call

When you receive a call, the Incoming call message appears on the head-up display.

▶ Swipe upwards or downwards on the left-hand touch control and select [ ] (Accept) or [ ] (Reject).

▶ Press the left-hand touch control.

The call may be accepted/rejected using the [ ] or [ ] buttons on the steering wheel.

Setting the head-up display using the on-board computer

On-board computer:

→ HEAD-UP DISPLAY

The following head-up display settings can be selected:

- Position
- Brightness
- Indicators

▶ **To select a setting:** swipe upwards or downwards on the left-hand Touch Control.

▶ Press the left-hand Touch Control.

▶ **To adjust a value:** swipe upwards or downwards on the left-hand Touch Control.

▶ Press the left-hand Touch Control.

Selecting the head-up display

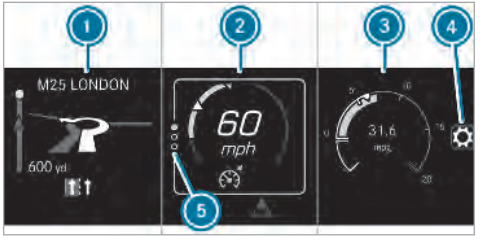

- ① Display area left
  - Navigation system
  - G-meter
- ② Display area centre
  - Set speed in the driver assistance system (e.g. cruise control)
  - Warnings from driver assistance systems (e.g. distance warning)
- ③ Display area right
  - Traffic Sign Assist
  - Average consumption

- Assistant display
- ④ Selects the settings
- ⑤ Index points

Non-required display areas ① to ③ can be hidden.

ⓘ In audio mode, the station name or track is temporarily shown when the audio source is being actively operated.

▶ **To select a display:** swipe upwards or downwards on the left-hand Touch Control.

▶ Press the left-hand Touch Control.

▶ **To adjust a value:** swipe upwards or downwards on the left-hand Touch Control.

▶ Press the left-hand Touch Control.

Adjusting the design of the instrument display

On-board computer

→ STILE & ANZEIGE

Setting the design

▶ Swipe upwards or downwards on the left-hand touch control.

▶ Press the left-hand touch control.
The instrument display is shown in the selected design.

The following designs can be selected, depending on the vehicle equipment:

- Classic
- Sport
- Progressive
- Understated
  - Basic displays

Head-up Display

Function of the head-up display

The head-up display projects important information in the driver's field of vision, e.g. current speed.

Depending on the vehicle's equipment, different content can be shown in the three display areas of the head-up display (→ page 238).

System limitations

The visibility of the displays is affected by the following conditions:

- seat position
- positioning of the display image
- light conditions
- wet carriageways
- objects on the display cover
- polarisation in sunglasses

ⓘ In extreme sunlight, sections of the display may appear washed out. You can correct this by deactivating and reactivating the head-up display.

Notes on operating safety

⚠ **WARNING** Risk of distraction from information systems and communications equipment

If you operate information and communication equipment integrated in the vehicle when driving, you will be distracted from the traffic situation. This could also cause you to lose control of the vehicle.

- ▶ Only operate this equipment when the traffic situation permits.
- ▶ If you cannot be sure of this, stop the vehicle whilst paying attention to road and traffic conditions and operate the equipment with the vehicle stationary.

⚠ **WARNING** Risk of distraction from operating mobile communication equipment while the vehicle is in motion

If you operate communication equipment integrated in the vehicle when driving, you will be distracted from the traffic situation. This could also cause you to lose control of the vehicle.

Only operate this equipment when the vehicle is stationary.

For your own safety, always observe the following points when operating mobile communications equipment and especially your voice control system:

- Observe the legal requirements for the country in which you are driving.
- While driving, only operate mobile communications equipment and your voice control system when the traffic conditions permit it. You may otherwise be distracted from the traffic conditions and cause an accident, injuring yourself and others.
- Do not use the voice control system in an emergency as your voice can change and your telephone call can be unnecessarily delayed.
- Familiarise yourself with the voice control system functions before starting the journey.

Operation

Multifunction steering wheel operation overview

LINGUATRONIC is operational approximately thirty seconds after the ignition is switched on.

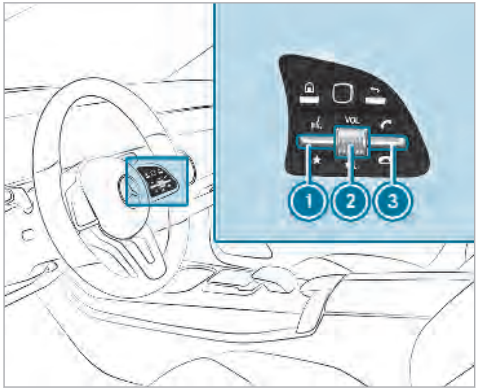

1. Press the rocker switch up: [ ] starts the dialogue
2. Press the control knob: [ ] switches the sound off or on (ends the dialogue)
   Turn the control knob up/down: increases/decreases the volume
3. Press the rocker switch up: [ ] makes/accepts a call
   Press the rocker switch down: [ ] rejects/ends a call (ends the dialogue)

Conducting a dialogue

For the dialogue with LINGUATRONIC, you can use complete sentences of colloquial language as voice commands, such as, for example, "Please show me the list of the last calls" or "How warm is it outside?". It is also not necessary to first change to the relevant application such as "Telephone" or "Vehicle function".

- **To activate or continue a dialogue:** say a keyword, e.g. "Hello Mercedes".
  With a voice command such as "Hello Mercedes, show me the maximum permissible speed", the desired information can be called up directly with a single voice command.

or

- Press the [ ] button on the multifunction steering wheel.
  You can say a voice command after an acoustic signal.
- **To correct an entry:** say the Correction voice command.
- **To select an entry from the selection list:** say the line number or the contents.
- **To browse the selection list:** say the Next or Back voice command.
- **To interrupt the dialogue:** say the Pause voice command.
- **To jump to the preceding dialogue:** say the Back voice command.
- **To jump back to the top dialogue level:** say the Home voice command.
- **To cancel the dialogue:** say the Close voice command or press the [ ] or [ ] button on the multifunction steering wheel.

▶ **To interject during the voice output:** say a new voice command. This will be recognised by LINGUATRONIC.
For this, the corresponding option must be activated in the system setting.

Operable functions

You can use the LINGUATRONIC voice control system to operate the following functions depending on the equipment:

- Telephone
- Text message and e-mail
- Navigation
- Address book
- Radio
- Media
- Vehicle functions

Overview of types of voice commands

A distinction is made between the following voice commands:

- **Global voice commands** can be said at any time and regardless of the current application, e.g. the voice commands Navigate to, Call or Text message to.
- **Application-specific voice commands** are only available for the active application.

On the display next to the active application, examples of global voice commands and the corresponding application-specific voice commands are displayed on an autocue. The lists can be scrolled or can be operated by speech or the controller/touchpad.

Number entry functions

- The numbers allowed are zero to nine.
- Telephone numbers can be entered as single digits.

Information on the language setting

You can change the language of LINGUATRONIC via the system language settings. If the set system language is not supported by LINGUATRONIC, English will be selected.

LINGUATRONIC is available in the following languages:

- German
- English
- French
- Italian
- Dutch
- Polish
- Portuguese
- Russian
- Swedish
- Spanish
- Czech
- Turkish

Using LINGUATRONIC effectively

Help functions

You receive information and help for:

- **Optimal operation:** say the Help voice control system voice command.
- **Current application:** on the multifunction steering wheel, press the [ ] rocker switch up and say the Help voice command.
- **Continued dialogue:** say the Help voice command during a voice dialogue.
- **Specific function:** say the voice command for the desired function, e.g. "Help telephone".

Notes on how to improve speech quality

If LINGUATRONIC does not understand you:

- only operate LINGUATRONIC from the driver's seat.
- say the voice commands coherently and clearly, but do not exaggerate the words.
- avoid loud noises that cause interference while making a voice command entry, e.g. the blower.
- say the voice tag with the same intonation when creating voice tags.

A voice tag in the address book is not recognised:

- only create sensible address book entries in the system/mobile phone, e.g. enter surname and first name in the correct field.
- do not use any abbreviations, unnecessary spaces or special characters.

If a station list entry is not recognised:

- say the Read out station list voice command.

Essential voice commands

Notes on the voice commands

Aside from the exact voice commands (see the "Voice command" column) to call up specific functions, in most cases LINGUATRONIC also understands a great many paraphrases from daily usage. Possible examples for this are given in the "Colloquial alternatives" column. For some languages however these alternatives are only available to a limited extent.

Overview of switch voice commands

Switch voice commands can be used to open certain applications.

Switch voice commands

Voice command	Colloquial alternatives	Function
Switch to navigation	Can you please open the navigation system?	Switches to navigation mode
Map	Show map	Switches to map display
Switch to address book	Open the phone book	Switches to the address book
Switch to telephone	Switch on the telephone	Switches to telephone mode
Switch to messages	Can you switch to messages please?	Switches to the messages application
Text message	Compose text message	Switches to read aloud function and composing of text messages
Switch to e-mail	Can you please open email?	Switches to read aloud function and composing of e-mail
Switch to radio	Switch on the radio	Switches to radio mode
Switch to media	Open media	Switches to media mode.
USB	USB stick	Switches to USB
iPod	iPod	Switches to the iPod®
Bluetooth audio	Switch Bluetooth audio on	Switches to Bluetooth® audio

Voice command	Colloquial alternatives	Function
Switch to Internet	Jump to Internet	Switches to Internet services
Internet application <name>	Open the Mercedes App	Starts a Mercedes-Benz online application. The application must be called up by touch once prior to use.
Connect	Open Internet services	Switches to Internet mode
Change to vehicle menu	Switch to the car settings	Switches to the vehicle settings
Switch to system settings menu	Open the system settings menu	Switches to the vehicle settings

Overview of navigation voice commands

Using navigation voice commands, you can enter POIs or conventional addresses as well as directly change important navigation settings.

Navigation voice commands

Voice command	Colloquial alternatives	Function
Navigate to <Address/POI/Contact>	Drive me to <address/POI/contact>	Universal search for all types of destinations. A search is also conducted in the address book contacts, the navigation database and on the Internet (POIs). The order of the details, e.g. city, street or house number, can be changed.
Address in <Country>	Enter new address in <country>	Destination entry in a desired country, e.g. address in France
Home	Navigate home	Starts navigation to home address
Work	To my office/my job	Starts navigation to your workspace
POI <POI>	Enter POI <POI>	Destination entry for a POI, e.g. the POI Brandenburg Gate. A search is also performed in the navigation database and on the Internet.
POI online search <POI>	Find/search in the Internet/web for a <POI>	Conducts a POI search on the Internet only
Navigate to contact <Name>	Drive/bring me to the contact address <name>	Destination entry to a contact in the address book

Voice command	Colloquial alternatives	Function
Enter country Enter town Enter district Enter street Enter junction Enter house number Search by postcode	Enter a new country Enter a town Enter a district/borough Enter a street name I would like to enter a junction Enter a house number Add a new postcode	Enters a country/town/district/street/junction/house number/post-code
Nearest restaurant Nearest car park Nearest rest area with toilets Nearest filling station	Nearest restaurant Nearest car park Nearest service station with toilets Next filling station	Searches for nearby restaurants, parking spaces, rest areas with toilets and filling stations
Last destinations	Last destinations	Selects a destination from the list of last entered destinations
Show alternative routes	I would like to have an alternative route displayed	Switches route guidance to another route
Start route guidance	I would like to start route guid-ance/Navigate there	Starts route guidance after entering a valid destination
Cancel route guidance	Can you quit route guidance?	Cancels route guidance

Voice command	Colloquial alternatives	Function
Guidance instructions on Guidance instructions off	Switch on guidance instructions Switch off guidance instructions	Switches the route guidance voice output on/off
Show traffic map Hide traffic map	Switching traffic jam messages on Switching traffic reports off	Switches the traffic map on/off
Switch on POI symbols Switch off POI symbols	Show symbols on the map Hide map symbols	Switches the POI symbols display on the map on/off

Overview of telephone voice commands

You can use the telephone voice commands to make phone calls or search through the address book.

Telephone voice commands

Voice command	Colloquial alternatives	Function
Call <Name>	Call <Name>	Makes a phone call. All address book names are available.
Search for contact <Name>	Search for the address book entry for <Name>	Searches for and displays a contact. All address book names are available.
Previous calls	Show call list	Displays all outgoing, incoming and missed telephone calls.

Voice command	Colloquial alternatives	Function
Redial	Redial/Call last phone number	Selects the last phone number dialled
Change phone	Could you please switch to the second phone?	Changes the primary telephones

Radio voice commands

Radio voice commands can also be used when the radio application runs in the background and another application is visible in the foreground.

Radio voice commands

Voice command	Colloquial alternatives	Function
Station <station name>	Play station/channel <station name>	To call up receivable or saved stations
Select frequency	Play another frequency	To enter a radio frequency
Next station	Find another station/Change station	To switch to the next station that can be received
Previous station	Return to last station	To switch to the previous station
Save station	Save station name	To save the current station in the favourites list

Voice command	Colloquial alternatives	Function
Show station list	Can you show me the station list?	To show the list of stations that can be received
Read out station list	I would like to listen to the station list, please	To listen to the names of all receivable stations
Traffic information on	Switch on traffic information	To switch on traffic announcements
Traffic information off	Switch off traffic information	To switch off traffic announcements
Radio info on	I want you to turn on additional radio station text	To switch on information about the current station
Radio info off	I want you to turn off additional radio station text	To switch off information about the current station

Overview of media player voice commands

Media player voice commands can also be used when the media player application runs in the background and another application is visible in the foreground.

Media player voice commands

Voice command	Colloquial alternatives	Function
Play <track/album/artist/ Composer/music genres/track lists>	Play <track>	The names of all available tracks, albums, artists, composers, genres or playlists are accepted during the search. In the case of a clear search result the track found is played back immediately.
Search for track <track>	Search for Song/Track/Video <Title>	The names of all available tracks, albums, artists, composers, genres or playlists are accepted during the search. A selection list appears from which you can select the desired music. If you wish to play all the tracks in a selection list, say "Play all tracks".
Search for album <album>	Look for music album <album>	
Search for artist <artist>	Search for artist/singer/band <artist>	
Search for composer <composer>	Search for the songwriter<song-writer>	
Search for music genre <music genre>	Look for music type/music style <music genre>	
Search for playlist <playlist>	Show me tracklist/playlist <play-list>	
Next track	Other track	Plays back the next track on the current playlist
Previous track	Repeat last song	Plays back the previous track on the current playlist

Voice command	Colloquial alternatives	Function
Random track list on	Switch on random mode	Switches on random mode
Random track list off	Switch off shuffle mode	Switches off random mode
Show me the current playlist	Let me look at the current playlist/ track list	The current playlist is displayed.
What am I listening to	Which music is currently playing	The information about the track currently playing is read aloud.

Overview of message voice commands

Text messages and e-mails can be created, edited and listened to using the message voice commands.

Message voice commands

Voice command	Colloquial alternatives	Function
Text message to <Name>	New message to <Name>	To create a text message. All address book names are available.
E-mail to <Name>	New e-mail to <Name>	To create an e-mail. All address book names are available.
Forward text message	Forward text	To forward selected or open text messages.
Forward e-mail	Forward electronic mail	To forward selected or open e-mails.

Voice command	Colloquial alternatives	Function
Read out text messages	Read out all texts	To have text messages read aloud.
Read out e-mails	Read out e-mails from <Name>	To have e-mail read aloud.
Reply	Compose a message/e-mail/text message to the sender	To reply to a message

Overview of vehicle voice commands

You can use the vehicle voice commands to directly call up the corresponding menus for the vehicle settings.

Vehicle voice commands

Voice command	Colloquial alternatives	Function
Ambient light menu	Can you show me the ambient light menu, please?	To display ambient light settings
Ambient light blue	I would like to change the interior lighting to ambient light blue	To switch ambient lighting, e.g. to blue
Display and styles menu	Go to display and styles menu settings	To show display settings

Voice command	Colloquial alternatives	Function
Assistance menu	Open the driver assistance menu	To display assistance settings
Energy flow menu	I would like to switch to the energy flow menu.	To display energy flow settings
Climate control menu	Can I go to the climate control menu, please?	To display climate control settings
Automatic climate control driver on	Turn off the climate control on the driver's side	To switch on the automatic climate control settings on the driver's side
Light menu	Can you show me the light settings?	To display light settings
Massage menu	Can you show me the massage menu?	To display massage settings
Massage driver's seat on	Switch on the driver's massage	To switch on the massage function for the driver's seat
Massage driver's seat off	Switch the driver's side massage off	To switch off the massage function for the driver's seat
Seats menu	Can you please display the seat settings?	To display seat adjustment settings

Voice command	Colloquial alternatives	Function
Seat heating front passenger level 2	Seat heating front-passenger on level 2	To set the seat heating for the front passenger seat to level 2
Outside temperature	How cold is it outside?/How warm is it?	To display the outside temperature
Engine data	Can I switch to the motor menu?	To display engine data
Vehicle data	Can you please display the vehicle data menu?	To display vehicle data
Consumption	Can I switch the consumption menu, please?	To show consumption settings
Average consumption	Read out the average fuel consumption	To show average consumption
Range	Tell me the current range	To show range data
Current speed limit	Tell me the maximum permitted speed	To show the current speed limit
Next service	Tell me my next service appointment	To show the next service due date

Overview and operation

Overview of the MBUX multimedia system

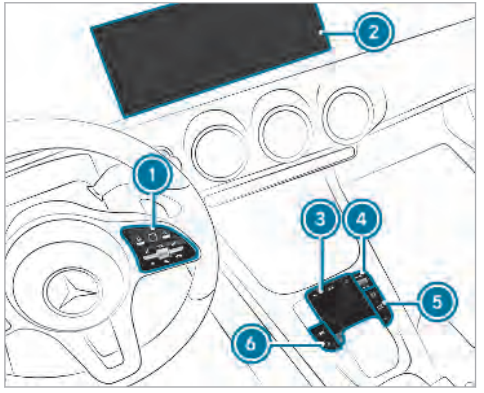

1. Touch Control
   Operates Touch Control(→ page 259)
2. Multimedia system display with touch functionality
   Home screen overview (→ page 258)
   Operates the touchscreen (→ page 260)
3. Touchpad
   Operates the touchpad(→ page 261)
4. Control knob
   Press and hold: switches the multimedia system or display on or off
   Press briefly: switches the mute function on/off
   Turn: adjusts the volume
5. Buttons for navigation, radio/media and telephone
   Calls up applications(→ page 263)
6. Buttons for vehicle functions/system settings and favourites/moods
   Calls up applications(→ page 263)

You can operate the MBUX multimedia system with the following central control elements:

- Touch Control 1 and touchpad 3
  The operation for both control elements is achieved by cursor control.
- Multimedia system display 2

Numerous application, online services, services and apps are available for you. You can call these up using the home screen or using buttons 5 and 6 next to the touchpad.

You can conveniently call up and add favourites on the steering wheel using the ★ rocker switch or next to the touchpad using the ★ button. Quick-access in the home screen and in the applications serve to select functions more quickly.

If you use the learn function of the multimedia system, you will receive suggestions during operation of the most probable navigation destinations, radio stations and contacts. The configuration of the suggestions takes place in your profile. You can compile your profile from various vehicle settings and settings of the multimedia system. For different driving situations, you can set moods within a profile. You can also call up and add moods using the rocker switch or the ★ button.

The Notifications Centre collects incoming notifications e.g. about an available software update. Depending on the type of notification it offers various actions.

With the global search in the vehicle you can search on-board across many categories as well as online in the Internet. Both functions call up the home screen.

Anti-theft protection
This device is equipped with technical provisions to protect it against theft. More detailed information about anti-theft protection can be obtained at a qualified specialist workshop.

Notes on the multimedia system display

Observe the notes on caring for the interior (→ page 386).

Automatic temperature-controlled switch-off feature: if the temperature is too high, the brightness is initially reduced automatically. The multimedia display may then switch off completely for a while.

ⓘ If you are wearing polarised sunglasses, it may be difficult to read the multimedia display.

Home screen overview

1. In the home screen: calls up the status display
   In other displays: calls up the home screen
2. Calls up the profile
3. Calls up the global search
4. Display only when the Mercedes-Benz emergency call system is not available
5. Displays, for example network display, signal strength of the mobile phone network, time
6. Calls up the Notifications Centre
   The star indicates new notifications.
7. Calls up an application using the symbol
8. Name of the application, beneath the current selection or display
9. Quick-access

⑩ Number of applications and currently selected display area

⑪ Calls up the air conditioning menu (→ page 136)

⑫ Calls up SUGGESTIONS, MOODS and FAVOURITES

Central control elements overview

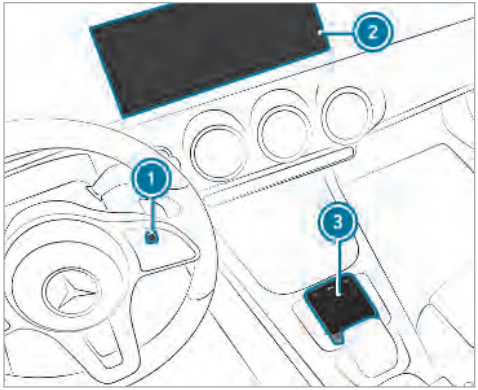

① Touch Control
② Multimedia system display with touch functionality
③ Touchpad

Touch Control

Operating Touch Control (MBUX multimedia system)

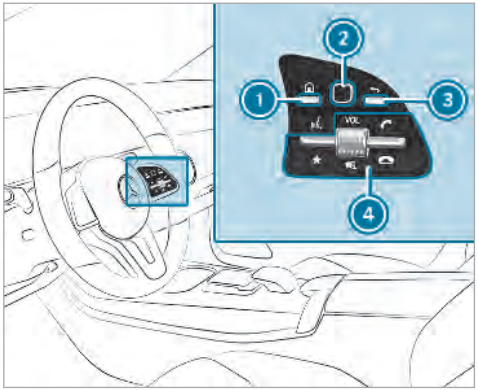

① [⌂] button
Shows the home screen and calls up applications
Calls up suggestions, moods and favourites: when the home screen is shown, swipe down on Touch Control ②.

② Touch Control
③ ⮌ button
Press briefly: returns to the previous display
④ Control panel for MBUX multimedia system:
★ rocker switch
Press down briefly: calls up favourites and moods
Press down and hold: adds favourites and moods
Turn the control knob: sets the volume VOL
Press the control knob: switches off sound
🔇
📞 rocker switch
Press up: makes or accepts a call
☎ rocker switch
Press down: rejects or ends a call

You can navigate in menus and lists via the touch-sensitive surface of Touch Control ② by using **a single-finger swipe**.

- **To select the menu item or entry:** swipe up, down, left or right.
- Press Touch Control ②.
- **To enter a character:** enter a character using the keyboard.
- **To move the digital map:** swipe in any direction.

Setting the sensitivity for the Touch Control
Multimedia system:
→ 🏠 ▸▸ Settings ▸▸ System ▸▸ Controls ▸▸ Touch Control sensitivity

- Select Fast, Medium or Slow.

Setting acoustic operating feedback for the Touch Control
Multimedia system:
→ 🏠 ▸▸ Settings ▸▸ System ▸▸ Controls

The function is supported by the selection in a list.

- Select Acoustic operating feedback.
- Set Normal, Loud or Off.
If the function is activated you will hear a clicking sound when scrolling in a list. When the beginning or end of the list is reached you will hear another clicking sound.

Operating the touchscreen

Tapping

- **To select a menu item or entry:** tap on a symbol or an entry.
- **To increase the map scale:** tap twice quickly with one finger.
- **To reduce the map scale:** tap with two fingers.
- **To enter characters with the keyboard:** tap on a button.

Single-finger swipe

- **To navigate in menus:** swipe up, down, left or right.
- **To move the digital map:** swipe in any direction.
- **To use handwriting to enter characters:** write the character with one finger on the touchscreen.

Two-finger swipe

- **To zoom in and out of the map:** move two fingers together or apart.

- **To enlarge or reduce the size of a section of a website:** move two fingers together or apart.
- **To turn the map:** turn anti-clockwise or clockwise using two fingers.

Touching, holding and moving

- **To move the map:** touch the touchscreen and move your finger in any direction.
- **To set the volume on a scale:** touch the touchscreen and move the finger to the left or right.

Touch and hold

- **To save the destination in the map:** touch the touchscreen and hold until a message is shown.
- **To call up a global menu in the applications:** touch the touchscreen and hold until the OPTIONS menu appears.

Touchpad

Operating the touchpad

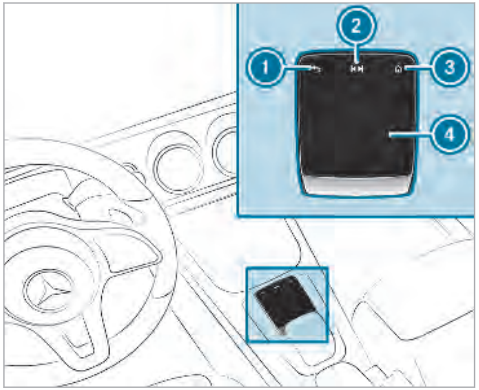

1 [⇦] button
Press briefly: returns to the previous display

2 [▶▶|] button
Calls up the control menu of the last active audio source

3 [⌂] button
Shows the home screen and calls up applications
Calls up suggestions, moods and favourites: when the home screen is shown, swipe down on touchpad 4.

4 Touchpad

You can navigate in menus and lists via the touch-sensitive surface of touchpad 4 by using **a single-finger swipe**.

- **To select the menu item or entry:** swipe up, down, left or right.
- Press touchpad 4.
- **To enter a character:** enter a character using the keyboard.

or

- Write a character on the touchpad.
- **To move the digital map:** swipe in any direction.

Use the following functions with a two-finger swipe:

- **To call up the Notifications Centre:** swipe down with two fingers.

- **To close the Notifications Centre:** swipe up with two fingers.
- **To call up the control menu of the last active audio source:** swipe up with two fingers.
- **To zoom in and out of the map:** move two fingers together or apart.
- **To enlarge or reduce the size of a section of a website:** move two fingers together or apart.

Setting the sensitivity for the touchpad
Multimedia system:
→ [⌂] ▸▸ Settings ▸▸ System ▸▸ Controls ▸▸ Touchpad sensitivity

- Select Fast, Medium or Slow.
- **To set the pressure sensitivity:** switch Touchpad tap on or off.
  If the function is switched on, a tap on the touchpad is enough to select a menu item.

Switching the read-aloud function for handwriting recognition on/off

Requirements:
- The multimedia system is equipped with a voice control system.
- The read-aloud function is available for the selected system language.

Multimedia system:
→ [⌂] ▸▸ Settings ▸▸ System ▸▸ Audio ▸▸ System feedback

- Switch Read out handwriting recognition on or off.
  When the function is selected, the character input on the touchpad is read aloud.

Activating/deactivating haptic operating feedback on the touchpad
Multimedia system:
→ [⌂] ▸▸ Settings ▸▸ System ▸▸ Controls

The function supports you when making entries on the touchpad and when selecting menus.

- Switch Haptic operating feedback on or off.
  When the function is activated, a tactile feedback in the form of a vibration is effected when the touchpad is operated.

Setting acoustic operating feedback for the touchpad
Multimedia system:
→ [⌂] ▸▸ Settings ▸▸ System ▸▸ Controls

The function is supported by the selection in a list.

- Select Acoustic operating feedback.
- Set Normal, Loud or Off.
  If the function is activated you will hear a clicking sound when scrolling in a list. When the beginning or end of the list is reached you will hear another clicking sound.

Selecting a station and track using the touchpad
- Press the [▸▸|] button on the touchpad.

or

- Swipe upwards using two fingers on the touchpad.
  The control menu appears for the audio source that was last selected.
- Swipe left or right using one finger.
  Radio: the previous or next station is set.

  Media source: the previous or next track is selected.
- **To hide the control menu:** swipe down on the touchpad using two fingers.

Alternatively:

- Swipe to the left or right over the [▶▶|] button.
  Radio: the previous or next station is set.

  Media source: the previous or next track is selected.

Main functions

Calling up applications

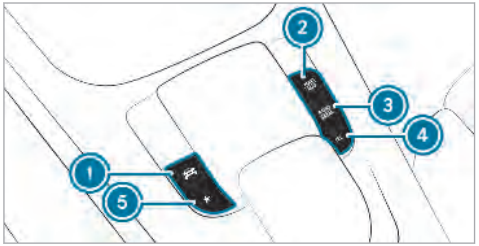

1. CAR button
   Calls up vehicle functions
2. [NAVI] MAP button
   Calls up navigation
3. [RADIO] [MEDIA] button
   Calls up radio or media
4. [TEL] button
   Calls up the telephone
5. [★] button
   Press briefly: calls up favourites and moods
   Press and hold: adds a favourite and mood

Alternatively in the home screen: when you start the vehicle the home screen is shown in the multimedia system display.

- Select the application by swiping and tapping.

or in any display

- Press the [⌂] button on the Touch Control or on the touchpad.

or

- Briefly press the [⌂] symbol in the multimedia system display.
  The applications are displayed.
- Select the application by swiping and tapping.

Profile

Notes on profiles

WARNING Risk of becoming trapped during adjustment of the driver's seat after calling up a profile

If the driver's seat is adjusted after selection of a profile, you or other drivers could become trapped.

▶ **To stop adjustment before somebody becomes trapped:** briefly press on the warning message on the multimedia system display.

or

▶ Press one of the memory position buttons or a seat adjustment switch in the driver's door.
The adjustment process is stopped.

Overview of profiles

Using the multimedia system up to seven profiles can be created in the vehicle.

Profiles store your personal vehicle settings and settings for the multimedia system.

If the vehicle is used by several drivers, the driver can select their profile before the journey, without changing the settings of other drivers.

You can select the profile:

- when entering (→ page 266)
- on the home screen (→ page 258)

The profile settings are activated as soon as a profile is selected.

ⓘ When you call up your profile, the driver's seat and outside mirrors can be set.

You can cancel the setting process with the following actions:

- Briefly press the Positioning seat and steering wheel. Please tap to cancel. warning message in the multimedia system display.
- Press one of the seat operating buttons in the driver's door.

Profile content

Depending on the vehicle equipment, the following settings can be stored in your profile, for example:

- Driver's seat and mirror settings
- Driver's seat memory
- Radio (including station list)
- Previous destinations
- Climate control
- Ambient lighting
- DYNAMIC SELECT I (individual)
- Instrument Display, Head-up Display and style (display style of the multimedia system)
- Favourites, moods and suggestions

ⓘ Settings for driver assistance systems are not personalised.

Mercedes me connect profile and synchronisation

If you use a profile from Mercedes me connect, the following online functions are available, for example:

- You can configure the settings in the vehicle using the Mercedes me app and the Mercedes me portal.
- The synchronisation enables the adjustment between the profiles on Mercedes me connect and the profiles in the vehicle (profile management).
- You can add a personal profile photo that is shown in the vehicle.
- You can take your profile with you in new vehicles.

Requirements for using Mercedes me connect profiles (vehicle owner)

- You have a Mercedes me user account.
- The vehicle has been connected with the user account.
- The personalisation service is activated.

Requirements for using Mercedes me connect profiles (additional vehicle users)

- You have a Mercedes me user account.
- The vehicle owner has invited you to connect your user account on Mercedes me with that of his vehicle.
- You have accepted the invitation.

Creating a new profile

Multimedia system:

→ [⌂] » [👤] Profiles

▶ Select [+] Create profile .

▶ Select an avatar.

▶ Enter the name and confirm with [OK].

▶ Select Continue [>].

▶ **To select the profile basis:** select the settings with which you want to start your new profile, Current system settings or Factory settings.

▶ Select Save.

▶ **To accept or reject data recording for suggestions:** when the notification appears that the vehicle will offer personalised suggestions based on the navigation destinations visited, numbers called and music preferences, select Accept or Reject.
Accept allows the data recording and enables the suggestions function.
Reject rejects data recording.

Selecting profile options

Multimedia system:

→ [⌂] » [👤] Profiles

▶ Select [•••] for a profile.

▶ **To edit a profile:** select Edit profile.

▶ Select an avatar.

▶ Change the name, if necessary.

▶ Select Save.

▶ **To configure suggestions:** select Suggestions settings (→ page 269).

▶ **To reset favourites or moods:** select Reset favourites to factory settings or Reset moods to factory settings.

▶ Select Yes.

▶ **To reset a profile:** select Reset profile to factory settings.

▶ Select Yes.

▶ **To delete a profile:** select Delete profile.

▶ Select Yes.

ⓘ The guest profile cannot be deleted.

Selecting a profile

Multimedia system:

→ [⌂] » [👤] Profiles

ⓘ When you call up your profile, the driver's seat and outside mirrors can be set.

You can cancel the setting process with the following actions:

- Briefly press the Positioning seat and steering wheel. Please tap to cancel. warning message in the multimedia system display.
- Press one of the seat operating buttons in the driver's door.

▶ Select a profile.

▶ Press the [OK] button to confirm the message.
The profile is loaded and activated.

ⓘ Alternatively, the profile can already be selected when the vehicle is entered (→ page 266).

Synchronising a profile

Requirements:

- You have a Mercedes me user account.
- The vehicle is connected with your Mercedes me user account.
- The personalisation service is activated on Mercedes me connect.

Multimedia system:

→ [⌂] » [👤] Profiles » General settings

Synchronisation enables the following:

- You can configure the vehicle settings using the Mercedes me app.
- The profile on Mercedes me connect and the profile in the vehicle are aligned (profile management).

▶ Activate Synchronise profiles automatically.

or

▶ Select Synchronise profiles now.
Synchronise profiles now: the profiles are synchronised when this option is selected.

Synchronise profiles automatically: the profiles in the vehicle are automatically aligned with the profiles on Mercedes me connect when the ignition is switched on and off.

During synchronisation the profile list and the profile functions are blocked.

Showing the profile selection when entering

Requirements:

- At least one profile has been created.

Multimedia system:

→ [⌂] » [👤] Profiles

If the option is activated, you can see a profile as soon as you get in.

▶ Select General settings.

▶ Activate Show profile selection when entering.
When the vehicle is started, the multimedia system display shows the active profile.

Moods

Overview of moods

You can configure the vehicle settings according to your preferences and save as a mood. A mood can be called up any time via the home screen. There is then no need to make the desired settings again.

There are pre-defined moods available, e.g. Journey, Nature and Lounge.

Example for the use of moods

For recurring driving situations, such as long drives on the motorway, you can save you preferred settings in a mood in the vehicle. For example, you can have displays such as the navigation map, the tachometer and the trip computer shown, set your favourite radio station and your preferred drive program. These settings are saved when you set a mood (→ page 267) under the name you desire (e.g. "Long journey"). On the next motorway trip you can then select this mood directly and thereby restore your settings without the need to make each setting separately.

Elements of a mood

Depending on vehicle equipment the following settings can be saved in a mood:

- Setting of the Instrument Display (→ page 230)
- Setting of the Head-up Display (→ page 238)
- Setting of the ambient lighting (→ page 124)
- Starting screen for the multimedia system display
- Visual style (→ page 281)
- DYNAMIC SELECT drive program (→ page 149)
- Eco start/stop setting (→ page 148)
- Navigation system settings

ⓘ A mood contains the currently active settings in the vehicle.

Calling up moods

Multimedia system:

→ [⌂]

▶ When the home screen is shown, swipe up until MOODS appears.

▶ Select a mood.

Creating a new mood

Requirements:

- The settings which are to be saved in the mood are active.
  The overview shows the available settings (→ page 267)

Multimedia system:

→ [⌂] ▸▸ Mood

▶ Select [+] Create new mood .

▶ Select an entry screen.

▶ Select Continue [>].

▶ Select an image.

▶ Enter the names into the entry field and confirm with [OK].

▶ **To save a mood:** select Save.

Selecting additional settings

▶ Select Advanced settings.
▶ Activate or deactivate the settings.

When the maximum number that can be saved is reached:

▶ Select OK from the prompt.
▶ Select a mood that should be overwritten.
▶ Proceed as described above.

Creating using the ★ rocker switch or button

▶ Press and hold the bottom section of the ★ rocker switch on the steering wheel.

or

▶ Press and hold the ★ button next to the touchpad.
▶ Select Create new mood.
▶ Proceed as described above.

Modifying a mood

Multimedia system:

→ ⌂

▶ When the home screen is shown, swipe up until MOODS appears.
▶ Press on a mood until the OPTIONS menu is shown.
▶ Select OK.
▶ Select an image.
Enter the name.
▶ Select OK.
▶ **To save a mood:** select Save✓.

Moving a mood

Multimedia system:

→ ⌂

▶ When the home screen is shown, swipe up until MOODS appears.
▶ Press on a mood until the OPTIONS menu is shown.
▶ Select Move.
▶ Tap on ◀ or ▶.
▶ Tap on ✓.

Moving the moods menu in the home screen

▶ Select ⌂.
▶ Swipe upwards and select Neue Reihenfolge festlegen (Define new order).
▶ Select Moods.
▶ Tap on ▲ or ▼.
▶ Tap on ✓.

Deleting a mood

Multimedia system:

→ ⌂

▶ When the home screen is shown, swipe up until MOODS appears.
▶ Press on a mood until the OPTIONS menu is shown.
▶ Select Delete.
▶ Select Yes.

Showing information about moods (DIBA)
Multimedia system:

- When the home screen is shown, swipe up until MOODS appears.
- Press on a mood until the OPTIONS menu is shown.
- Select Owner's Manual.

Suggestions

Suggestions overview

The vehicle can learn the habits of the driver. Based on previously used functions, the most likely navigation destinations, radio stations or contacts are offered under SUGGESTIONS.

Suggestions are shown when the following requirements are fulfilled:

- a profile has been created (→ page 265).

  No suggestions are available in the Guest profile.
- a profile has been selected.
- you have accepted data recording.
- from the beginning of usage, the multimedia system must analyse the user habits. When sufficient data is collected then the suggestions are available.

If the requirements mentioned are not fulfilled, a preview with a description of the function appears in the SUGGESTIONS menu.

You can configure data recording (→ page 269) or delete the suggestions recorded (→ page 270).

Calling up suggestions

Requirements:

- a profile has been created and is selected (→ page 266).

  If the profile Guest is active, no suggestions can be cancelled.

  This profile is selected when the vehicle is purchased.

- Briefly press ⌂ in the multimedia system display.
  The home screen is shown.
- Swipe up until the SUGGESTIONS menu is shown.
- Select a navigation destination, a radio station or a contact.
  If route guidance is already active, you cannot start a new route guidance or set an intermediate destination for the existing route.

Configuring suggestions

Multimedia system:

- Select ⚙ for a profile.
- Select Suggestions settings.
- **To switch the suggestions display on/off:** switch Learn from location history, Allow music suggestions and Allow contact suggestions on or off.
  If an option is switched on, suggestions for navigation destinations, radio stations or contacts are shown.

  If the option is switched off, no suggestions are shown.

- **To deactivate the learn function for one day:** activate Deact. learn. for 24h.
  For 24 hours no new actions will be trained and no data recorded for the active profile. Suggestions will continue to be shown. The remaining time is shown next to Deact. learn. for 24h.

  Before the time runs out, a message is shown that the multimedia system will continue the learn function shortly.

  Example: if the option is switched on and a route to a new destination has been calculated, this destination would not be taken into account for the learn function.
- **Resetting the suggestion history:** select Reset suggestion history.

ⓘ This process cannot be reversed.

- Select OK.
- **To protect settings using a PIN:** switch on PIN-Schutz (PIN protection).
  If PIN protection is switched on, you must enter the Mercedes me PIN to have access to your suggestions. This PIN will be set in the Mercedes me portal for the personalisation service to protect your personal settings.

Renaming suggestions

Only navigation destinations can be renamed.

- Briefly press the ⌂ symbol in the multimedia system display.
  The home screen is shown.
- Swipe up until the SUGGESTIONS menu is shown.
- Highlight a navigation destination and press until the OPTIONS menu is shown.
- Select Rename.
- Enter the name.
- **To confirm the entry:** select Yes.

Deleting a suggestion

- Briefly press ⌂ in the multimedia system display.
  The home screen is shown.
- Swipe up until the SUGGESTIONS menu is shown.
- Highlight a suggestion and press until the Options menu is shown.
- Select Delete.

Deleting suggestions in the applications

You can delete suggestions in the previous destinations, in the radio station list and in the contacts.

- Select ▼ for a suggestion.
- Select Do not suggest.
- **To delete a suggestion from a current list:** select Not now.
  The suggestion will be shown again at a later time in the list.
- **To delete a suggestion permanently:** select Never.
- Select Yes.
  The suggestion will not be shown again in future. All suggestions are reset.
- **To cancel the function:** select Cancel.

Favourites

Overview of favourites

Favourites offer you quick access to frequently used applications. It is possible to create 20 favourites in total.

You can select favourites from categories or you add favourites directly from an application.

Calling up favourites

In the multimedia system display

- Tap on [⌂].
  The home screen is shown.
- Swipe up until FAVOURITES is shown.

On the steering wheel or the touchpad

- Press the [★] rocker switch on the steering wheel down.

or

- Press the [★] button next to the touchpad.

Adding favourites

Selecting favourites from categories

- Briefly press [⌂] in the multimedia system display.
  The home screen is shown.
- Swipe up until FAVOURITES is shown.
- Select [+] New favourite.
  The categories are displayed.
- Select the category.
  The favourites are displayed.
- Select a favourite.
  The favourite is stored at the next available position.
- **All positions in the favourites are taken:** confirm the message shown with OK.
  A list shows all the favourites.
- Select a favourite which should be overwritten.

Adding a favourite from an application

Examples of adding from an application are:

- Saving a contact.
- Storing a radio station.
- Adding a media source.
- Saving a navigation destination.
- Adding an ENERGIZING comfort program (if available).

- **To store a radio station as a global favourite:** set a radio station.
- Press on the radio station until the OPTIONS menu is shown.
- Select Save as favourite.
  The radio station is added as a favourite.

Renaming favourites

- Briefly press [⌂] in the multimedia system display.
  The home screen is shown.
- Swipe up until FAVOURITES is shown.
- Press on a favourite until the OPTIONS menu is shown.
- Select Rename.
- Enter the name.
- Select OK.

Moving favourites

Moving favourites in the favourites menu

- Briefly press [⌂] in the multimedia system display.
  The home screen is shown.
- Swipe up until FAVOURITES is shown.
- Press on a favourite until the Options menu is shown.
- Select Move.
- Move the favourite to the desired position.
- Tap on [✓].

Moving the favourites menu in the personalisation

- Briefly press [⌂] in the multimedia system display.
  The home screen is shown.
- Swipe up until Neue Reihenfolge festlegen (Define new order) is shown.
- Select Neue Reihenfolge festlegen (Define new order).
- Move Favourites to the new position.
- Tap on [✓].
- **To close the menu:** select Close.

Deleting favourites

- Briefly press [⌂] in the multimedia system display.
  The home screen is shown.
- Swipe up until FAVOURITES is shown.
- Press on a favourite until the OPTIONS menu is shown.
- Select Delete.
- Select Yes.

Notifications Centre

Overview of the Notifications Centre

The following communications are collected in the Notifications Centre:

- Communications which are generated by the vehicle or from MBUX.
- Communications which are received through the use of services.

The following notification types are available for you:

- Navigable destinations and routes
- Messages (text messages, e-mail)
- Calendar entries and reminders, e.g. from "In Car Office"
- System information, e.g. software update available
- Other notifications, e.g. from additional online services that can be subscribed to

The Notifications Centre can be found on the home screen, in menus and at the top right of the navigation map [💬] (→ page 258).

A star in the symbol informs you of new notifications.

Notifications are briefly shown as they are received. This occurs for nearly every application that you are currently using. If you take no action, these are stored for future access in the Notifications Centre.

The notifications are sorted chronologically. The most recent notifications are at the top.

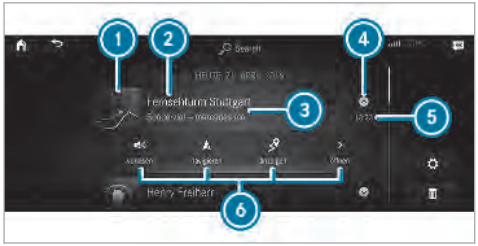

A notification shows the following information:

- Symbol or image (1) for the application
- Title (2), which contains the name, a telephone number or a navigation destination
- The type of notification and additional information (3)
- A time stamp (5)
- If several actions are available, symbol (4) to open or close the notification.

Depending on the type of notification, up to four different actions (6) are available.

Examples of actions include:

- Read aloud
- Placing a call
- Reply
- Calling up a web page
- Navigation

Some notifications, e.g. a navigation destination, are stored longer. Therefore, it is not necessary to carry out available actions directly on the receipt of the notifications. A route guidance can be started at a later time.

ⓘ You can start a global search in the Notifications Centre (→ page 274).

Calling up notifications

Opening the Notifications Centre

▶ **On the touchpad:** swipe down with two fingers.

or

▶ **On the multimedia system display:** press briefly on the [ ] symbol for the Notifications Centre.

▶ **On the Touch Control and on the touchpad:** mark the [ ] symbol for the Notifications Centre by swiping.

▶ Press on the control element.

Selecting a notification

▶ Swipe up or down.

▶ Tap or press on the control element.

Closing the Notifications Centre

▶ **On the touchpad:** swipe up with two fingers.

Selecting actions for a notification

The following options are available:

- Select the action directly in an application after a notification is received and shown.
- Select the action later after calling up in the Notifications Centre.

▶ **An action is available:** select the action.

▶ **Several actions are available:** if the notification is not open, select the [ ] symbol.

▶ Select the action.
The notification is still available.

Editing notifications

▶ Calling up the Notifications Centre (→ page 273).

▶ **To make settings:** select ⚙.

ⓘ If no settings can be made, a message appears.

▶ Activate or deactivate the setting.

▶ **To delete:** select the recycle bin.

▶ Select Delete or Delete all.
Delete deletes a single notification.

Delete all deletes all notifications currently shown.

▶ With Finished you will exit delete mode.

Global search

Global search overview

You can use the global search in the home screen and in the notifications.

The global search provides search results for the following categories and their sub-categories:

- Navigation
- Media
- Telephone, social media, Office in Car
- User interface and Digital Owner's Manual
- Internet

This enables you to search for towns, roads and tourist attractions with the navigation system, for example.

During the entry process the most likely suggestions are shown beneath the search field. When you enter "S", "Stuttgart", "Steak" and "Sandra" are shown, for example. If you select "Stuttgart", you receive the suggestions "Starbucks", "Steak" and "City railway", for example.

The search results in the list are shown, sorted according to category. Next to the category is the number of results. You will be shown the best results from each category. Additional results can be found after selecting the respective category.

If you confirm an entry with OK, all categories and the number of results will be shown in a summary. After selecting a category you can select the search results within the category.

When you select a search result the detailed view opens. In the detailed view you can choose whether and which actions you want to carry out with the respective search result. For example, you can start route guidance or place a call to somebody. The actions are named correspondingly.

The search can be carried out with the following input methods:

- Entering characters using the on-screen keyboard
- Entering characters with handwriting recognition
- Dictation function

Using the global search

Multimedia system:

▶ Select 🔍 Search .

or

▶ Call up the notifications (→ page 273).

▶ Select Search.

ⓘ Alternatively, you can use the [🎤] dictation function for the search.

▶ Enter the search term into the search field.
Use the character input function
During the entry process the three most likely suggestions are offered beneath the search field.

In the list on the right, the top two search results are shown for each category.

▶ **To accept a suggestion:** select the suggestion.
The three most likely suggestions are offered.

▶ Continue the search or accept a suggestion.

▶ **To accept the second search result:** select the search result.
An action starts or a list is shown.

▶ Select a search result or an action in the list.

▶ **To show all categories:** select OK.

▶ **To show search results for a category:** select a category.

▶ **To show details:** select a search result.

▶ **To start an action:** select an action.
After selection of an action, a track is played back or the route to a destination is calculated, for example.

Switching the sound on/off

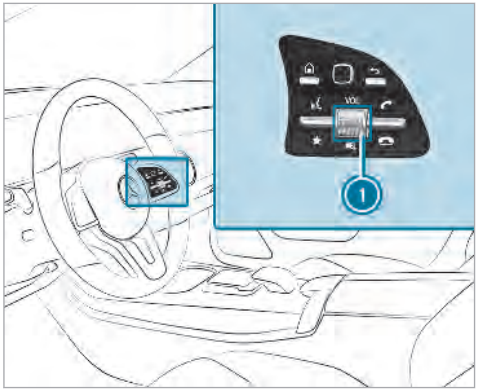

On the multifunction steering wheel

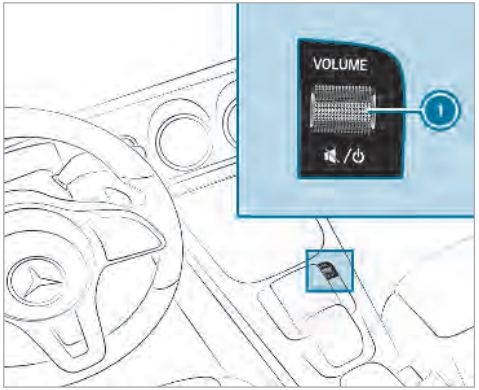

On the multimedia system

▶ **To mute:** press volume control ①.
The [🔇] symbol appears in the status line of the multimedia system display.

You will also hear traffic announcements and navigation announcements even when the sound is muted.

▶ **To switch on:** turn volume control ① or change the media source.

Adjusting the volume

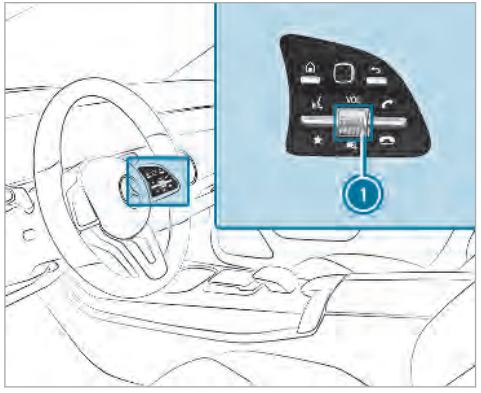

On the multifunction steering wheel

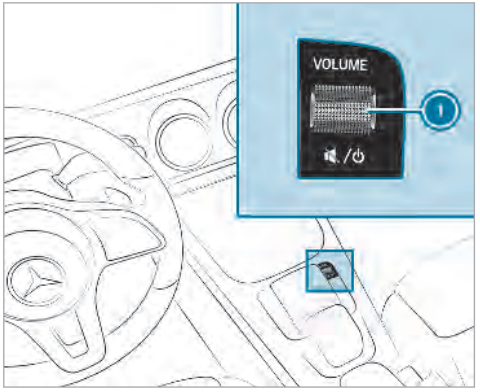

On the multimedia system

▶ Turn volume control ①.
The volume of the current radio or media source is set. The volume of other audio sources can be adjusted separately.

Adjust the volume in the following situations:

- during a traffic announcement
- during a navigation announcement

The volume of the current media source changes in accordance with the volume of the navigation announcement.

- during a telephone call
- when entering or exiting a parking space while using Active Parking Assist

or

▶ Press the ⌂ button.
▶ Select Settings.
▶ Select System.
▶ Select Audio.
▶ Select a volume setting.
▶ Set the volume.

Entering characters

Using the character input function

WARNING Risk of distraction from information systems and communications equipment

If you operate information and communication equipment integrated in the vehicle when driving, you will be distracted from the traffic situation. This could also cause you to lose control of the vehicle.

- Only operate this equipment when the traffic situation permits.
- If you cannot be sure of this, stop the vehicle whilst paying attention to road and traffic conditions and operate the equipment with the vehicle stationary.

You must observe the legal requirements for the country in which you are currently driving when operating the multimedia system.

Character entry can be carried out with these control elements:

- Touch Control
- Touchscreen (multimedia system display)
- Touchpad

Character entry takes place by cursor control when using the Touch Control and the touchpad. Character entry on the touchscreen is carried out with direct interaction.

Character input can be started with a control element and resumed with another.

- When the keyboard is shown, enter the characters on the control element by swiping and pressing or by tapping (touchscreen).

or

- Write the characters on the touchpad or the touchscreen.

Entering characters on the touchpad

- The handwriting recognition supports character entry with character suggestions.
- If the read aloud function is activated for handwriting recognition then the entered characters are read aloud.

  Requirements:

  The multimedia system is equipped with a voice control system.

  The read-aloud function is available for the selected system language.

Examples of character entry:

- Renaming a favourite
- Entering a destination address in the navigation system
- Entering a web address.

Entering characters on the touchpad

Requirements:

- If you wish to have the character input read aloud: the read aloud function of the handwriting recognition is switched on (→ page 262).
- An online connection is required for some functions.

Using the keyboard

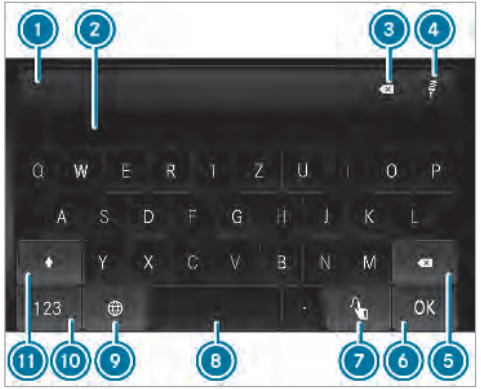

1. Input line
2. Suggestions
3. Deletes the entry
4. Switches to voice input
5. Deletes
   Pressing or pressing briefly deletes the last character entered
   Pressing and holding deletes the entry
6. Accepts an entry
7. Switches to handwriting input
8. Enters a space
9. Changes the keyboard language
10. Switches to digits and special characters (level 2)
    #+= switches to additional special characters (level 3)
    ABC switches to letters (level 1)
11. Pressing or pressing briefly switches between upper-case and lower-case letters
    Pressing and holding switches to upper-case letters permanently

ⓘ When Touchpad tap is switched on, tapping is sufficient to select a character or an option (→ page 262).

▶ Call up the character entry to rename a favourite, for example (→ page 271).

▶ Select the character by swiping and pressing. The character is entered in input line ①. Suggestions are shown in ②.

▶ **To select a suggestion:** select one of the entries.

▶ Resume character input.

▶ **To enter an alternative character:** press and hold a character.

▶ Select the character.

▶ **To end character input:** press the [⇦] button.

ⓘ The available editing functions depend on the editing task, the language set and the character level.

ⓘ Entry using the keyboard can also be completed using the Touch Control.

Using handwriting input

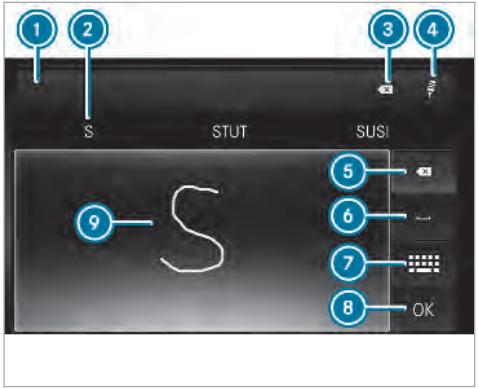

1. Input line
2. Suggestions
3. Deletes the entry
4. Switches to voice input
5. Deletes
   Pressing or pressing briefly deletes the last character entered
   Pressing and holding deletes the entry
6. Enters a space
7. Switches to input using the keyboard
8. Accepts an entry

ⓘ When Touchpad tap is switched on, tapping is sufficient to select an option (→ page 262).

▶ Call up the character entry to rename a favourite, for example (→ page 271).

▶ When the keyboard is displayed, select [ ].

▶ Write the character on the touchpad with a finger.
The character is entered in input line 1.
Suggestions 2 are shown.

▶ **To select a suggestion:** select one of the entries.

▶ Resume character input. The letters can be written next to each other or above each other.

▶ **To end character input:** press the [ ] button.

Entering characters on the touchscreen

Requirements:

- An online connection is required for some functions.

Using the keyboard

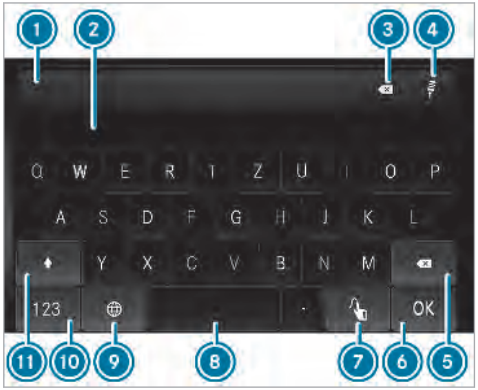

1. Input line
2. Suggestions

③ Deletes the entry
④ Switches to voice input
⑤ Deletes
Pressing briefly deletes the last character entered
Pressing and holding deletes the entry
⑥ Accepts an entry
⑦ Switches to handwriting input
⑧ Enters a space
⑨ Changes the keyboard language
⑩ Switches to digits and special characters (level 2)
#+= switches to additional special characters (level 3)
ABC switches to letters (level 1)
⑪ Pressing briefly switches between upper-case and lower-case letters
Pressing and holding switches to upper-case letters permanently

▶ Call up the character entry to rename a favourite, for example (→ page 271).
The keyboard is shown.

▶ Press briefly on a character key.
The character is entered in input line ①.
Suggestions ② are shown.
▶ **To select a suggestion:** select one of the entries.
▶ Resume character input.
▶ **To enter an alternative character:** press and hold a character.
▶ Select the character.
▶ **To end character input:** press the [⇦] button.

ⓘ The available editing functions depend on the editing task, the language set and the character level.

Using handwriting input

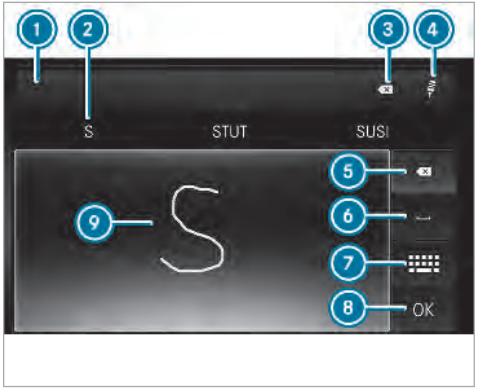

① Input line
② Suggestions
③ Deletes the entry
④ Switches to voice input
⑤ Deletes
Pressing briefly deletes the last character entered

Pressing and holding deletes the entry

6 Enters a space

7 Switches to input using the keyboard

8 Accepts an entry

- Call up the character entry to rename a favourite, for example (→ page 271).
- When the keyboard is displayed, select [ ].
- Write the character with one finger on the touchscreen.
  The character is entered in input line 1.
  Suggestions 2 are shown.
- **To select a suggestion:** select one of the entries.
- Resume character input. The letters can be written next to each other or above each other.
- **To end character input:** press the [↩] button.

Setting the keyboard for character entry

Multimedia system:

→ Settings ▸▸ System ▸▸ Controls ▸▸ Keyboards and handwriting

- Confirm Select keyboards.
  Select the keyboard language in the list.

System settings

Display

Configuring display settings

Multimedia system:

→ [⌂] ▸▸ Settings ▸▸ System ▸▸ Styles

Styles

- Select Classic, Sport or Progressive.
  The multimedia system display changes depending on the style selected. If you revert to the factory settings, the Classic style is set.

Adapting the ambient lighting for the style

- Select Adapt ambient lighting.
  Activate or deactivate the function.
  This function adjusts the ambient lighting for the selected display style.

Setting the display brightness

- Select Display brightness.
- Select a brightness value.

Switching the display off/on

- **Off:** select Display off.
- **On:** press a button, [TEL], for example.

Selecting the display design

- Select Day/night design.
- Select Automatic, Day design or Night design.

Switching the temperature display on/off

- Select Temperaturanzeige (Temperature display).
- Select Außentemperatur (Outside temperature) or Kühlmitteltemp. (Coolant temperature).
  The selected temperature is displayed in the instrument cluster.

Time and date

Setting the time and date automatically

Multimedia system:

→ ⌂ ▸▸ Settings ▸▸ System ▸▸ Time and date

▶ Deactivate Manual time adjustment.
The time and date are set automatically for the selected time zone and summer time option.

ⓘ The correct time is required for the following functions:

- Route guidance with time-dependent traffic guidance.
- Calculation of expected time of arrival.

Setting the time zone

Multimedia system:

→ ⌂ ▸▸ Settings ▸▸ System ▸▸ Time and date

Setting the time zone manually

Requirements:

- Automatic time zone is deactivated.

▶ Select Time zone:.

The list of countries is displayed.

ⓘ If there are several time zones available in a country, these will be shown after the country is selected.

▶ Select a country and, if required, a time zone.
The time zone set is displayed after Time zone:.

Setting the time zone automatically

▶ Activate Automatic time zone.

Setting the time and date format

Multimedia system:

→ ⌂ ▸▸ Settings ▸▸ System ▸▸ Time and date ▸▸ Set format

▶ Set the date and time format ●.

Setting the time and date manually

Requirements:

- The Manual time adjustment function is switched on.

Multimedia system:

→ ⌂ ▸▸ Settings ▸▸ System ▸▸ Time and date

Setting the time

▶ Select Set time.

▶ Set a time.

ⓘ For vehicles with GPS the time is set automatically through the selected time zone.

Setting the date

Requirements:

- GPS is not installed.

▶ Select Set date.

▶ Set a date.

ⓘ In vehicles with GPS, a date cannot be set even with active manual time adjustments. The date is then set automatically through the selected time zone.

Connectivity

Switching transmission of the vehicle position on/off

Multimedia system:

→ ⌂ ▸▸ Settings ▸▸ System ▸▸ Wi-Fi & Bluetooth

▶ Select Transmit vehicle position.

▶ Activate or deactivate the function.

Bluetooth®

Information about Bluetooth®

Bluetooth® technology is a standard for short-range wireless data transfer up to approximately 10 m. You can use Bluetooth® to connect your mobile phone to the multimedia system and use the following functions, for example:

- hands-free system with access to the following options:
  - call lists (→ page 338)
- Internet connection
- listening to music via Bluetooth® audio
- transferring business cards (vCards) into the vehicle

Bluetooth® is a registered trademark of Bluetooth Special Interest Group (SIG) Inc.

ⓘ Internet connection via Bluetooth® is not available in all countries.

Activating/deactivating Bluetooth®

Multimedia system:

→ ⌂ ▸▸ Settings ▸▸ System ▸▸ Wi-Fi & Bluetooth

▶ Activate or deactivate Bluetooth®.

Wi-Fi

Wi-Fi connection overview

You can use Wi-Fi to establish a connection with a Wi-Fi network and to access the Internet or other network devices.

The following connection options are available:

- Wi-Fi connection

  The Wi-Fi connection to a Wi-Fi-capable device, e.g. the customer's mobile phone or a tablet PC is established.
- multimedia system as a Wi-Fi hotspot

  Using this function, a tablet PC or notebook can be connected, for example. The connected device can use the data tariff of the vehicle.

ⓘ The use of the vehicle data tariff by external devices is not available in all countries.

To establish a connection, you can use the following methods:

- WPS PIN

  The connection to a secure Wi-Fi network is made via a PIN.
- WPS PBC

  The connection to a secure Wi-Fi network is made by pressing a button (push button).
- Security key

  The connection to a secure Wi-Fi network is made via a security key.

Setting up Wi-Fi

Requirements:

- The device to be connected supports one of the three means of connection described.

Multimedia system:

→ [⌂] ▸▸ Settings ▸▸ System ▸▸ Wi-Fi & Bluetooth

Activating/deactivating Wi-Fi

▶ Switch Wi-Fi on or off.
If Wi-Fi is deactivated, communication via Wi-Fi to all devices is interrupted. This also means that a connection to the communication module cannot be established. Then some functions such as dynamic route guidance with Live Traffic Information are not available.

Connecting the multimedia system with a new device via Wi-Fi

This function is available if a communication module is not installed.

The type of connection established must be selected on the multimedia system and on the device to be connected.

ⓘ The connection procedure may differ depending on the device. Follow the instructions that are shown in the display. Further information (see the manufacturer's operating instructions).

▶ Select Internet settings.
▶ Select Connect via Wi-Fi.
▶ Select Add hotspot.

Using a security key:

▶ Select the options [>] of the desired Wi-Fi network.
▶ Select Connect using security key.
▶ Have the security key displayed on the device to be connected (see the manufacturer's operating instructions).
▶ Enter this security key on the multimedia system.
▶ Confirm the entry with [ok].

ⓘ All devices support a security key as a means of connection.

Using a WPS PIN:

▶ Select the options [>] of the desired Wi-Fi network.
▶ Select Connect using WPS PIN input.
The multimedia system generates an eight-digit PIN.
▶ Enter this PIN on the device to be connected.
▶ Confirm the entry.

Using a button:

▶ Select the options [>] of the desired Wi-Fi network.
▶ Select Connect via WPS PBC.
▶ Select "Connect via WPS PBC" in the options on the device to be connected (see the manufacturer's operating instructions).
▶ Press the WPS button on the device to be connected.
▶ Select Continue in the multimedia system.

Activating automatic connection

- Select Connect via Wi-Fi.
- Select the options [>] of the desired Wi-Fi network.
- Activate Permanent Internet connection.

Connecting with a known Wi-Fi

- Select Connect via Wi-Fi.
- Select a Wi-Fi network.
  The connection is established again.

Setting up a Wi-Fi hotspot

Multimedia system:

→ [⌂] ▸▸ Settings ▸▸ System ▸▸ Wi-Fi & Bluetooth

Configuring the multimedia system as a Wi-Fi hotspot

The type of connection established depends on the device to be connected. The function must be supported by the multimedia system and by the device to be connected. The type of connection established must be selected on the multimedia system and on the device to be connected.

- Select Vehicle hotspot.
- Select Connect device to vehicle hotspot.

Connecting using WPS PIN generation

- Select Connect using WPS PIN generation.
- Enter the PIN shown in the multimedia system display on the device to be connected and confirm.

Connecting using WPS PIN entry

- Select Connect using WPS PIN input.
- Enter the PIN that is shown on the external device's display on the multimedia system.

Connecting using a button

- Select Connect via WPS PBC.
- Press the push button on the device to be connected (see the manufacturer's operating instructions).
- Select Continue.

Connecting using a security key

- Select Connect device to vehicle hotspot.
  A security key is displayed.
- Select the vehicle from the device to be connected. It will be shown with the DIRECT-MB Hotspot 12345 network name.
- Enter the security key which is shown in the multimedia system display on the device to be connected.
- Confirm the entry.

Connecting using NFC

- Select Connect via NFC.
- Activate NFC on the mobile device (see the manufacturer's operating instructions).
- Bring the mobile device into the NFC area of the vehicle (→ page 332).
- Select Finished.
  The mobile device is now connected to the multimedia system hotspot via NFC.

Generating a new security key:

- Select Vehicle hotspot.
- Select Generate security key.
  A connection will be established with the newly created security key.

▶ **To save a security key:** select Save.
When a new security key is saved, all existing Wi-Fi connections are then disconnected. If the Wi-Fi connections are being re-established, the new security key must be entered.

System language

Notes on the system language

This function allows you to determine the language for the menu displays and the navigation announcements. The selected language affects the characters available for entry. The navigation announcements are not available in all languages. If a language is not available, the navigation announcements will be in English.

Setting the system language

Multimedia system:

→ [⌂] ▸▸ Settings ▸▸ System ▸▸ Language

▶ Set the language.

ⓘ If you are using Arabic map data, the text information can also be shown in Arabic on the navigation map. To do so, select العربية as the language from the language list. Navigation announcements are then also made in Arabic.

Setting the distance unit

Multimedia system:

→ [⌂] ▸▸ Settings ▸▸ System ▸▸ Units

▶ Select km or mi.

▶ In the multifunction display of the instrument display, switch the Additional speedometer display on.

Data import and export

Data import/export function

The following functions are possible:

- transferring data from one system or vehicle to another system or vehicle.
- creating a backup copy of your personal data and loading it again.
- protecting your personal data against unwanted export with PIN protection.

ⓘ Please note that the NTFS file system is not supported. The FAT32 file system is recommended.

Importing/exporting data

! NOTE Data loss

▶ Do not remove the data storage medium when data is being exported.

Mercedes-Benz is not liable for any loss of data.

Requirements:

- The vehicle is stationary.
- The ignition is switched on.
- A USB device is connected.

Multimedia system:

→ [⌂] ▸▸ Settings ▸▸ System ▸▸ System backup

▶ Select Import data or Export data.

Importing

▶ Select a data storage medium.
A prompt appears asking whether you really wish to overwrite the current data. If data originates from another vehicle, this is recognised during data reading.

The multimedia system is restarted once the data has been imported.

ⓘ Current vehicle settings can be edited after the import.

Exporting

If PIN protection is activated, your PIN is requested.

▶ Enter the four-digit PIN.

▶ Select a data storage medium.
The data is exported. The data export may take several minutes.

ⓘ After successful export, the data is saved in the "MyMercedesBackup" directory which can be found on the storage medium.

Activating/deactivating PIN protection

Multimedia system:
↳ ⌂ ▸▸ Settings ▸▸ System ▸▸ PIN protection

Setting the PIN

▶ Select Set PIN.

▶ Enter a four-digit PIN.

▶ Enter the four-digit PIN again.
If both PINs match, PIN protection is active.

Changing the PIN

Requirement:

- A current PIN must be set.

▶ Select Change settings.

▶ Enter the current PIN.

▶ Select Change PIN.

▶ Set a new PIN.

Activating PIN protection for data export

▶ Select Change settings.
Confirm with the PIN.

▶ Select Protect data export.
Activate or deactivate the function.

Unblocking the PIN

Requirements:

- There is an Internet connection.
- A Mercedes me account exists at http://www.mercedes.me.
- An individual user profile is active (→ page 266).

If the PIN has been entered incorrectly three times, the PIN will be blocked. You can have a single-use password sent to you via the Mercedes me connect online portal to reset the PIN protection.

▶ Select Unblock PIN.

▶ Enter the single-use password.
PIN protection is reset, and you can set a new PIN.

ⓘ Alternatively, you can have PIN protection reset at a Mercedes-Benz service centre.

Software update

Information on software updates

A software update consists of three steps:

- Downloading or copying of the data required for installation
- Installation of the update
- Activation of the update by restarting the system

The multimedia system provides a message when an update is available.

Depending on the source, you can perform various updates:

Source of the update	Update type
Internet	Navigation map, system updates, Digital Owner's Manual
External storage medium, e.g. USB flash drive	Navigation maps

Software updates ensure your vehicle's technology is always up-to-date.

In order to constantly improve the quality of our services you will receive future updates for your multimedia system, the Mercedes me connect services and your vehicle's communication module. These will conveniently be sent to you via the mobile phone connection in your vehicle and, in many cases, installed automatically. You can monitor the status of your updates at any time on the Mercedes me portal and find information about potential innovations.

Your advantages at a glance:

- conveniently receive software updates via the mobile phone network
- the long-term quality and availability of Mercedes me connect is guaranteed
- keep your multimedia system and communication module up-to-date

Further information about software updates can be found at http://me.mercedes-benz.com

Performing a software update

Requirements:

- An Internet connection is required for updates which are obtained online (→ page 352).

Multimedia system:

→ ⌂ ▸▸ Settings ▸▸ System ▸▸ Software update

Automatically

Requirements:

- Your vehicle has a built-in communication module.

▶ Activate Automatic online updates.
The updates will be downloaded and installed automatically.

The current status of the updates is displayed.

Manually

▶ Deactivate Automatic online updates.

▶ Select an update from the list and start the update.

Activating the software update

▶ Restart the system.
The modifications from the software update will be active.

Important system updates

Important system updates may be necessary for the security of your multimedia system's data. Install these updates, or else the security of your multimedia system cannot be ensured.

ⓘ If automatic software updates are activated, the system updates will be downloaded automatically (→ page 288).

As soon as an update is available for download, a corresponding message appears on the multimedia system display.

You have the following selection options:

- Accept and install
  The update will be downloaded in the background.
- Information
  Information about the pending system update is displayed.
- Later
  The update can be downloaded manually at a later time (→ page 288).

Deep system updates

Deep system updates access vehicle or system settings and can therefore only be carried out when the vehicle is stationary and the ignition is switched off.

If the download of a deep system update is completed and the update is ready for installation, you will be informed of this after the next ignition cycle, for example.

ⓘ Park the vehicle safely in a suitable location before starting the installation.

Requirements for the installation:

- The ignition is switched off.
- Notes and warnings have been read and accepted.
- The electric parking brake is applied.

If all requirements are met, the update will be installed. The multimedia system cannot be operated while the update is being installed and vehicle functions are restricted.

If errors should occur during the installation, the multimedia system automatically attempts to restore the previous version. If restoration of the previous version is not possible, a symbol appears on the multimedia system display. Please consult a qualified specialist workshop to resolve the problem.

Reset function

Multimedia system:

→ ⌂ ▸▸ Settings ▸▸ System ▸▸ Reset

Personal data is deleted, for example:

- station presets
- connected mobile phones
- individual user profiles

ⓘ The guest profile is reset when the settings are restored to the factory settings.

▶ Select Yes.

If PIN protection is activated, a prompt appears asking if you also wish to restore this to the factory settings during a reset.

- Select Yes.
- Enter the current PIN.
  The PIN is reset.

Or

- Select No.
  The current PIN stays the same after resetting.

ⓘ If you have forgotten your PIN, a Mercedes-Benz service centre can deactivate the PIN protection for you. Alternatively, you can request a one-time password via the Mercedes me connect online portal, in order to reset the PIN protection (→ page 287).

A prompt appears again asking whether you really wish to reset.

- Select Yes.
  The multimedia system is reset to the factory settings.

Navigation

Switching navigation on

Multimedia system:

→ [⌂] ▸▸ Navigation (Navigation)

Example: digital map with menu

1. To enter a POI or address and additional destination entry options
2. To interrupt route guidance (if route guidance is active)
3. To repeat a navigation announcement and switch navigation announcements on/off

To activate/deactivate announcements using the Advanced settings option:
- Announcement of street names which should be turned into
- Announcement of traffic warnings
- Audible indication when approaching a POI

4 To call up a route menu

Route
- Alternative routes
- Route overview
- Route list
- Avoidance options
- Route settings

Traffic
- Traffic reports
- Local area messages
- Report a traffic incident
- Live Traffic subscription information

Position
- To store a position
- To show the compass
- To show Qibla (available in selected countries)

5 To call up the menu settings

To use or switch options on/off:
- To show traffic information
- To show motorway information
- To show augmented reality objects
- Settings for map content and traffic

▶ Alternatively: press the NAVI button.
The map appears. The current vehicle position is shown. The menu is shown.

Showing/hiding the navigation menu

→ 🏠 ▸▸ Navigation (Navigation)

If no route guidance is active the map and the menu appear.

If route guidance is active the map appears in full-screen mode and the menu is hidden.

▶ **To show:** tap on the multimedia system display.

or

▶ Press the Touch Control or the touchpad.
▶ **To hide:** the menu is hidden automatically.

Destination entry

Notes on destination entry

⚠ **WARNING** Risk of distraction from operating integrated communication equipment while the vehicle is in motion

If you operate communication equipment integrated in the vehicle when driving, you will be distracted from the traffic situation. This could also cause you to lose control of the vehicle.

- Only operate this equipment when the traffic situation permits.
- If you cannot be sure of this, stop the vehicle whilst paying attention to road and traffic conditions and operate the equipment with the vehicle stationary.

You must observe the legal requirements for the country in which you are currently driving when operating the multimedia system.

Entering a POI or address

WARNING Risk of distraction from information systems and communications equipment

If you operate information and communication equipment integrated in the vehicle when driving, you will be distracted from the traffic situation. This could also cause you to lose control of the vehicle.

- Only operate this equipment when the traffic situation permits.
- If you cannot be sure of this, stop the vehicle whilst paying attention to road and traffic conditions and operate the equipment with the vehicle stationary.

You must observe the legal requirements for the country in which you are currently driving when operating the multimedia system.
Multimedia system:
→ [⌂] ▸▸ Navigation (Navigation) ▸▸ [🔍] Where to?

Method 1: on-board search

Destination entry uses the on-board search of the database stored in the multimedia system.

The country in which the vehicle is located is set 1.

▶ Enter the POI or the address using the keyboard (in the image) or using handwriting recognition 6 in 2. The entries can be made in any order.

During destination entry, suggestions are made by the multimedia system. Destination selection takes place in list 3 or with OK.

The following entries can be made, for example:

- City, street, house number
- Street, city
- Postcode
- POI name
- POI category, e.g. Tankstelle (Filling station)
- Town, POI name

- Telephone number, if this is available for the POI
- Contact name

Example of quick address entry:

- If you are searching for Königsstraße in Stuttgart, for example, you can enter STUT and KÖN.
- If you are searching for a POI in the United Kingdom, for example, you can enter THE SHARD.

  If you would like to try out both examples, you may also need to change the country.

▶ As an alternative, voice input ⑧ can also be used.

▶ **To switch to handwriting recognition:** select ⑥.

▶ Write the character on the touchpad. The letters can be written next to each other or above each other (→ page 277).

▶ **To return to entry using the keyboard:** select [⠿].

or

▶ Press the touchpad.

▶ **To delete an entry:** select ④.
The characters are deleted individually.

or

▶ If characters have been entered in ②, select [⊗] next to the input line.
The complete entry is deleted.

▶ **To switch to upper-case or lower-case letters:** select ⑪.

▶ **To switch to special characters and symbols:** select ⑩.

▶ With #+= you can switch to additional special characters.

▶ **To enter a space:** select ⑦.

▶ **To set the language:** select ⑨.

▶ Select the language.

ⓘ This function is useful for countries in which several character sets are supported. An example is Russia, which uses Cyrillic and Latin characters.

▶ **To change the country:** select country indicator ①.

▶ Enter the country indicator, e.g. F for France.
The list is filtered.

▶ Select the country on list ③.
The destination can be entered.

▶ **To accept a destination:** select the destination in list ③.

▶ If the destination is ambiguous, select the destination in the list.
The destination address is shown. The route can be calculated.

Method 2: on-board search

Destination entry uses online map services. If the on-board search finds no suitable destinations or if you change countries, the online search is available.

▶ Select country indicator ①.

▶ Select the provider for the online service from the countries list.

or

▶ If the on-board search delivers no search results, select Online search.

▶ Enter the destination or the POI in the input line. The entry order is not relevant, e.g.

street and town. Use the functions described for the on-board search.
The search results are displayed.

▶ Select the destination or the POI in the list.
The detailed view for the route is displayed.

ⓘ Online search is not available in all countries.

Requirements:

- You have a user account for the Mercedes me portal.
- The service is activated.

  You can carry out the activation yourself or have it carried out at a Mercedes-Benz service centre.

Further information can be found at: http://www.mercedes.me

Selecting previous destinations

Requirements:

- Previous destinations are stored.
- For destination suggestions: you have created a profile (→ page 265).

The Learn from location history option is activated for your profile (→ page 269).

The multimedia system has already gathered sufficient data in order to show destination suggestions.

Multimedia system:

↳ [⌂] ▸▸ Navigation (Navigation) ▸▸ [🔍] Where to? ▸▸ PREV. DESTINATIONS

The following destinations can be selected:

- Previous destinations and routes
- Destination suggestions
- Stored destinations and routes(→ page 306)
- External destinations and routes (→ page 312)

▶ Select the destination or route
The destination address is shown. The route can be calculated.

ⓘ If you save a previous destination or a suggestion as a favourite (→ page 312), you can select these from the favourites (→ page 299).

Selecting a POI

Multimedia system:

↳ [⌂] ▸▸ Navigation (Navigation) ▸▸ [🔍] Where to? ▸▸ POIs

Searching using categories (no route guidance)

▶ Select the category.

or

▶ Select ALL CATEGORIES.

▶ Select the category and the sub-category (if available).

▶ When searching, filter with the search field according to categories or within the search results.
The search takes place in the vicinity of the vehicle's current position. The search result are sorted by distance in ascending order.

The POIs show the following information:

- direction of the linear distance to the POI (arrow)
- name of POI
- linear distance to the POI

- Select a POI with OK or select from the list.
  The destination address is shown. The route can be calculated.

Searching using categories (route guidance active)

- Select the category.

or

- Select ALL CATEGORIES.
- Select the category and the sub-category (if available).
- When searching, filter with the search field according to categories or within the search results.
- Select the search positions In the vicinity, Near destination or Along the route.
- If there are intermediate destinations for the route and Near destination has been selected, select the POI in the route overview.
- Select a POI with OK or select from the list.
  The destination address is shown. The route can be calculated.

Searching for personal POIs

Requirements:

- A USB device is connected with the multimedia system.
- Personal POIs with the GPS Exchange format (.gpx) have been saved in the "PersonalPOI" folder on the USB device.

- Select Personal POIs.
- Select a category.
- If route guidance is active, select a search position In the vicinity, Near destination or Along the route.
- Select a personal POI.
  The destination address is shown. The route can be calculated.

or

- Enter a search entry into the search field and filter the list.
- Select a personal POI.

Editing personal POI categories

- Select a personal POI category from the list ✓.
  A menu opens.
- **To change a name:** select Change name.
- Enter the name.
- Select OK.
- **To change a symbol:** select Change icon.
- Select a symbol.
- **To delete a personal POI category:** select Delete.
- Select Yes.

Configuring categories for quick-access

Up to five categories can be configured for quick-access.

- Select ALL CATEGORIES.
- Select the category and the sub-category (if available).
- Select ☆ or ★.
  ☆ adds the category.
  ★ removes the category.

▶ If there are already five categories, select the category which should be replaced.

Selecting a contact

Requirements:
- A mobile phone is connected to the multimedia system (→ page 330).

Multimedia system:
→ [⌂] ▸▸ Navigation (Navigation) ▸▸ [🔍] Where to? ▸▸ Contacts

Using the contact list

▶ Select a contact.
The contact details are displayed.

▶ Select the address.

Using search entry

▶ Enter names or telephone numbers, for example, into the search field.

▶ Select [OK].

▶ Select the contact.

▶ Select the address.
The destination address is shown. The route can be calculated.

ⓘ Route guidance to a contact address is reliable in the following cases:
- The contact address is complete.
- The contact data matches the map data in the digital map.

Entering geo-coordinates
Multimedia system:
→ [⌂] ▸▸ Navigation (Navigation) ▸▸ [🔍] Where to? ▸▸ Geo-coordinates

▶ Select Latitude or Longitude.

▶ Select geo-coordinates as latitude and longitude coordinates in degrees, minutes and seconds. To do this swipe up or down respectively.
The map shows the position.

▶ Confirm the entry with [OK].

▶ **To set the destination:** select the arrow or the arrow with ⊕.

Selecting from the map
Multimedia system:
→ [⌂] ▸▸ Navigation (Navigation)

▶ Move the map (→ page 320).

▶ When the crosshair marks the destination, press and hold on the control element.
If a destination is located exactly on the crosshair, the destination address is displayed.

If several destinations are located around the crosshair, a list shows the available roads and POIs.

▶ Select the destination in the list.
The destination address is shown. The route can be calculated.

Showing POIs in the vicinity of the map
If several destinations are located around the crosshair, the function is available.

▶ Select [•••].

▶ Select POIs in the vicinity.
The map appears.

- Swipe left or right on the control element. The previous or next POI is highlighted on the map. The name or the address is shown.
- Select the POI symbol.
- **Alternatively, to filter the display according to the POI category:** scroll on the control element.
- Select the POI category.

ⓘ User defined permits the selection of personal POI symbols (→ page 321).

Selecting from favourites

Requirements:

- Destinations are saved as favourites.

  Save a previous destination or a destination suggestion as a favourite (→ page 312).

Multimedia system:

Navigation (Navigation) ▸▸ Where to? ▸▸ Aus Favoriten (From favourites)

- Select a favourite.
  The destination address is shown. The route can be calculated.

Route

Calculating a route

Requirements:

- The destination has been entered.
- The destination address is shown.

Route guidance is not active

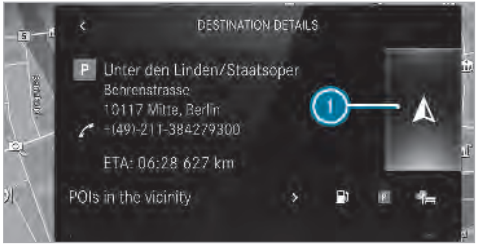

- Select ①.
  The route to the destination is calculated. The map shows the route. Route guidance then begins.

Route guidance is active

- Select ①. The arrow shows a ⊕.
  A prompt is shown.
- Select Add to route or Single destination.
  Single destination: the selected destination address is set as the new destination. The previous destinations and intermediate desti-