nations are deleted. Route guidance to the new destination begins.

Add to route: the selected destination address is set as the next intermediate destination. Route guidance begins.

If there are already four intermediate destinations, the multimedia system asks whether intermediate destination 4 should be deleted. Confirm the prompt with Yes.

Searching for POIs in the vicinity

ⓘ The POI symbols to the right of POIs in the vicinity show the first three categories for quick-access. You can configure these categories (→ page 296).

▶ Select a POI symbol.
The search results are displayed.

▶ Select a POI.
The destination address is shown. The route can be calculated.

or

▶ Select POIs in the vicinity [>].

▶ Search using categories, enter a search entry or search for a personal POI (→ page 296).

▶ Select a POI.
The destination address is shown. The route can be calculated.

Other menu functions

▶ **To save the destination:** select [☆].

▶ Select an option.
The following options are available for you:

- Save in "Previous destinations"
- Save as favourites
- Save as "My home"
- Save as "Work" address

▶ **To call the destination:** if a telephone number is available, select Call.

▶ **To share the destination using NFC or QR code:** select Share via NFC or QR code.

▶ Hold the NFC area of the mobile phone (see manufacturer's operating instructions) on the mat or place the mobile phone on it (→ page 332).

or

▶ Hold the mobile phone near to the multimedia system and scan the QR code.

▶ **To call up an Internet address:** if a web address is available, select www.

▶ **To show on the map:** select Display on map.

Selecting a route type

Multimedia system:

→ [⌂] ▸▸ Navigation (Navigation) ▸▸ Route Icon ▸▸ Route ▸▸ Route settings

▶ Select the route type.
If no route has been created, the next route is calculated on the basis of the new route type.

If a route has already been created, the route is calculated on the basis of the new route type.

- Fast route
  A route with a quick journey time is calculated.
- Short route

A route with a short driving distance is calculated.

- Eco route

  An economical route is calculated. The journey time may be somewhat longer than for quicker routes.

- Trailer mode

  Requirement: the option is available if a trailer has been coupled with the vehicle.

  A prompt is shown in the multimedia system. Confirm the prompt.

  The route is optimised for trailer operation.

The dynamic route can be switched on or off for the route types named.

- Automatic

  The route is calculated with the currently set route type.

  Traffic messages via Live Traffic Information or FM RDS-TMC are taken into account (→ page 313).

  Live Traffic Information and FM RDS-TMC are not available in all countries.

- AFTER ASKING

  A prompt appears when a new route is detected with a shorter journey time based on traffic reports. You can continue to use the current route or use the dynamic route instead (→ page 317).

- Off

  No traffic reports are taken into account for the route.

The following additional route settings can be activated or deactivated:

- Suggest alternative route

  If the option is switched on (→ page 304), then an alternative route is calculated for each route.

- Activate commuter route

  Requirements:

  You have created a profile (→ page 265).

  The Learn from location history option is activated for your profile (→ page 269).

  The multimedia system has gathered sufficient data in order to show destination suggestions.

  Routes have been learned for these destination suggestions.

  If the option is activated (→ page 304), navigation starts route guidance for the learned routes automatically without voice output.

Alternative for calling up route types

▶ Select ⌂ ▶ Navigation (Navigation) ▶ ⚙ ▶ Advanced settings ▶ Route settings.

Selecting route options

Multimedia system:

⌂ ▸▸ Navigation (Navigation) ▸▸ Route Icon ▸▸ Route ▸▸ Avoid options

Avoiding areas

▶ Select Avoid areas (→ page 323).

Avoiding motorways, ferries, tunnels, motorail trains, unpaved roads

▶ Switch on the avoid option.

Using toll roads

▶ Select Use toll roads.

▶ Switch the Payment by cash or card and Electronic billing options on or off.
The route takes into account roads that require the payment of a usage fee (toll) corresponding with the payment type selected.

These route options are not available in every country.

The selected route options cannot always be implemented. Therefore, a route may include a ferry, for instance, even though the avoid Ferries option is enabled. A message appears and you will hear a corresponding message.

Using routes requiring a special toll sticker

▶ Select Use vignette roads.
▶ Activate All.

or

▶ Switch on the countries that should be taken into account.
The route takes into account roads in the selected countries which require you to pay a time-based fee (vignette). A vignette allows for the use of a route network for a limited time period.

Alternative for calling up route options

▶ Select ⌂ ▶ Navigation (Navigation) ▶ ⚙ ▶ Advanced settings ▶ Avoid options.

Selecting notifications

Multimedia system:

↳ ⌂ ▸▸ Navigation (Navigation) ▸▸ 🔊 ▸▸ Advanced settings

▶ Switch an announcement on or off.
- Announce street names

  The multimedia system announces the names of the roads that will follow the upcoming change of direction.

  This function is not available in all countries and languages.
- Announce traffic warnings

Showing destination information for the route

Requirements:
- A destination is entered.

Multimedia system:

↳ ⌂ ▸▸ Navigation (Navigation) ▸▸ Route Icon ▸▸ Route

▶ Select Route overview.
When route guidance is active, the destination and intermediate destinations are shown, if these have been entered and not yet been passed.

The route can include up to four intermediate destinations.

▶ Select a destination or an intermediate destination.

The following information is displayed:
- Remaining driving distance
- Time of arrival
- Remaining journey time
- Name, destination address

- Phone number (if available)
- Web address (if available)

Planning routes

Multimedia system:

→ [⌂] ▸▸ Navigation (Navigation) ▸▸ Route Icon ▸▸ Route overview

▶ Select Set intermediate destination.

▶ Enter the intermediate destination as a POI or address, for example (→ page 293).

▶ Select the intermediate destination.
After selection of an intermediate destination, the route overview is shown again.

▶ Calculating the route with intermediate destinations(→ page 303)

ⓘ If there are already four intermediate destinations, delete an intermediate destination (→ page 303).

Editing a route with intermediate destinations

Multimedia system:

→ [⌂] ▸▸ Navigation (Navigation) ▸▸ Route Icon ▸▸ Route overview

▶ **To change the sequence of destinations:** select [▼] for a destination.
A menu opens.

▶ Select Move.
[✓] is highlighted.

▶ Move the intermediate destination or the destination with [∧] or [∨] to the desired position.

▶ Tap on [✓].

▶ **To delete a destination:** select [▼] for an intermediate destination or destination.

▶ Select Delete.
The destination is deleted.

Calculating a route with intermediate destinations

Requirements:

- The destination and at least one intermediate destination have been entered.

Multimedia system:

→ [⌂] ▸▸ Navigation (Navigation) ▸▸ Route Icon ▸▸ Route overview

▶ Select Start route guidance.

or

▶ If the route has been edited, select To Navigation.

▶ Confirm the prompt with Yes.
The route is calculated. Route guidance begins.

Displaying the route list

Multimedia system:

→ ⌂ ▸▸ Navigation (Navigation) ▸▸ Route Icon ▸▸ Route

▶ Select Route list.
The list shows the route sections. The current vehicle position is marked on the map.

The current vehicle position is shown with the following information:

- The symbol for the current vehicle position is displayed.
- The name of the road on which you are currently driving is shown.
- The road number of the road on which you are currently driving is shown.

The route list is updated during the journey.

▶ **To show route sections:** swipe up or down on the control element.
The route section is shown on the map.

Selecting an alternative route

Multimedia system:

→ ⌂ ▸▸ Navigation (Navigation) ▸▸ Route Icon

▶ Select Alternative route.
The routes are displayed in accordance with the setting made in the route settings.

The routes are numbered.

▶ Select the alternative route.

Activating a commuter route

Requirements:

- The Learn from location history option is activated for your profile (→ page 269).
- The multimedia system has gathered sufficient data in order to show destination suggestions.
- Routes have been learned for these destination suggestions.

Multimedia system:

→ ⌂ ▸▸ Navigation (Navigation) ▸▸ Route Icon ▸▸ Route ▸▸ Route settings

▶ Activate Activate commuter route.
The navigation system automatically detects that the vehicle is on a commuter route. It automatically starts a route guidance without voice output.

For the daily commuter route, traffic incidents on the route are also reported when driving without active route guidance.

Switching the automatic filling station search on/off

Multimedia system:

→ ⌂ ▸▸ Settings ▸▸ Fahrzeug (Vehicle)

▶ Switch Reserve fuel level on or off.
When the fuel reserve level is reached, and the option is switched on, a prompt appears asking whether you want to start searching for filling stations.

Starting an automatic filling station search

Requirements:

- The automatic filling station search is activated (→ page 304) .

Driving situation

The fuel level in the fuel tank reaches the reserve fuel level.

The Fuel tank reserve level Do you want to start the search for filling stations? message is shown.

▶ Select Yes.
The automatic filling station search begins. The available filling stations along the route or in the vicinity of the vehicle's current position are displayed.

▶ Select a filling station.
The address of the filling station is displayed.

▶ Calculate the route (→ page 299).
The filling station is set as the destination or the next intermediate destination.

▶ **If there are already four intermediate destinations:** select Yes in the prompt.
The filling station is entered in the route overview. Intermediate destination 4 is deleted. Route guidance begins.

Starting the automatic service station search

Requirements:

- ATTENTION ASSIST and the Suggest rest area function are activated (→ page 213).
- There are service stations along the route section ahead.

Driving situation

The Suggest rest area. Do you want to start the rest area search? message is shown.

▶ Select Yes.
The service station search starts. The available service stations along the route or in the vicinity of the vehicle's current position are displayed.

▶ Select a service station.
The service station address is displayed.

▶ Calculate the route (→ page 299).
The service station is set as the destination or the next intermediate destination.

▶ **If there are already four intermediate destinations:** select Yes in the prompt.
The service station is entered in the route overview. Intermediate destination 4 is deleted. Route guidance begins.

Showing a stored route on the map

Requirements:

- A USB device with stored routes is connected with the multimedia system (→ page 365).
- The route is stored in the "Routes" folder with the GPS Exchange format (.gpx).

Multimedia system:

→ [⌂] ▸▸ Navigation (Navigation) ▸▸ [🔍] Where to? ▸▸ Stored routes

▶ Select a route.

▶ Select Display on map.

▶ Move the map (→ page 320).

Starting a saved route

Requirements:
- A USB device with stored routes is connected with the multimedia system (→ page 365).
- The route is stored in the "Routes" folder with the GPS Exchange format (.gpx).

Multimedia system:
→ [⌂] ▸▸ Navigation (Navigation) ▸▸ [🔍] Where to? ▸▸ Stored routes

▶ Select a route.

▶ Select Start route guidance from the beginning or Start route guidance from current location.
Route guidance starts.

ⓘ The route can be saved with [☆] in the menu (→ page 299).

Recording a route

Requirements:
- A USB device is connected with the multimedia system (→ page 365).

Multimedia system:
→ [⌂] ▸▸ Navigation (Navigation) ▸▸ [🔍] Where to? ▸▸ Stored routes

▶ **To start recording:** select Start to record new route.
A red recording symbol is shown.
The route is stored on the USB device.

▶ **To stop recording:** select End recording.

Saving a recorded route

Requirements:
- A USB device is connected with the multimedia system (→ page 365).

Multimedia system:
→ [⌂] ▸▸ Navigation (Navigation) ▸▸ [🔍] Where to? ▸▸ Stored routes

▶ Select a route.

▶ Select [☆].

▶ Select Store in "Previous destinations".
The route is stored in the "Previous destinations" memory and can be called up from there for route guidance.

Editing a stored route

Requirements:
- A USB device with stored routes is connected with the multimedia system (→ page 365).

Multimedia system:
→ [⌂] ▸▸ Navigation (Navigation) ▸▸ [🔍] Where to? ▸▸ Stored routes

▶ Select a route with [▼].

▶ **To enter a name:** select Change name.

▶ Enter the name.

▶ Select OK.

or

▶ When the name has been changed, press the [⮌] button.

▶ Select Yes.

▶ **To delete a route:** select Delete.

▶ Select Yes.

Route guidance

Notes on route guidance

⚠ **WARNING** Risk of distraction from operating integrated communication equipment while the vehicle is in motion

If you operate communication equipment integrated in the vehicle when driving, you will be distracted from the traffic situation. This could also cause you to lose control of the vehicle.

- ▶ Only operate this equipment when the traffic situation permits.
- ▶ If you cannot be sure of this, stop the vehicle whilst paying attention to road and traffic conditions and operate the equipment with the vehicle stationary.

Route guidance begins once a route has been calculated.

The road and traffic rules and regulations always have priority over multimedia system driving recommendations.

Driving recommendations are:

- Navigation announcements
- Route guidance displays
- Lane recommendations

If you do not follow the navigation announcements or if you leave the calculated route, a new route is calculated automatically.

Driving recommendations may differ from the actual road and traffic conditions if:

- The route is diverted
- The direction of a one-way street has been changed

For this reason, you must always observe road and traffic rules and regulations during your journey.

The route may differ from the ideal route due to the following:

- Roadworks
- Incomplete digital map data

Changing direction overview

Changes of direction are shown in the following displays:

- Detailed image of the junction

  The display appears when you drive into a junction.
- 3D image

  The display appears when driving on junction-free, multi-lane roads, for example on motorway exits and motorway interchanges.

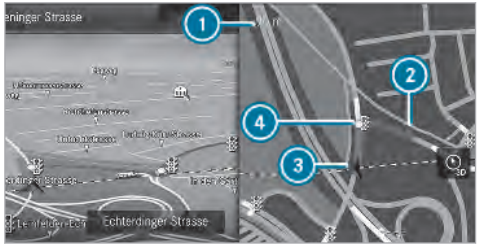

Example: detailed image of the crossing with upcoming changes of direction

1. Current distance to the change of direction
2. Changing direction
3. Current vehicle position
4. Manoeuvre point

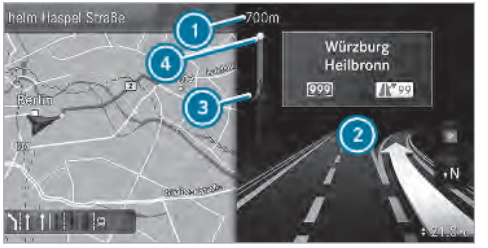

Example: 3D image of the upcoming change of direction

1. Current distance to the change of direction
2. Changing direction
3. Current vehicle position
4. Manoeuvre point

There are three phases when changing direction:

- Preparation phase

  If there is enough time between the changes of direction, the multimedia system prepares you for the upcoming change of direction. A navigation announcement, e.g. "Prepare to turn right", is issued.

  The map appears in full-screen mode.

  The status line shows: the direction information or the name of the road which is to be turned into and the distance to the change of direction.

- Announcement phase

  The multimedia system announces the upcoming change of direction, e.g. by announcing "Turn right in 100 m".

  The display is split into two parts. The map is displayed on the left; on the right, there is a detailed image of the junction or a 3D image of the upcoming change of direction.

- Change-of-direction phase

  The multimedia system announces the imminent change of direction, e.g. by announcing "Now turn right".

  The display is split into two parts.

  The change of direction takes place when the distance to manoeuvre point 4 is shown with 0 m and the symbol for vehicle position 3 has reached manoeuvre point 4.

When the change of direction is complete, the map appears in full-screen mode.

ⓘ Changes of direction are also shown in the Instrument Display.

Lane recommendations overview

This display appears for multi-lane roads.

The multimedia system can show lane recommendations if the digital map contains the relevant data.

1. Recommended lane (white arrow, blue background)
2. Possible lanes (white arrow)
3. Lanes not recommended (grey arrow)

- Recommended lane 1

  In this lane, you will be able to complete both the next change of direction and the one after that.
- Possible lane 2

  In this lane, you will only be able to complete the next change of direction.
- Lane not recommended 3

  In this lane, you will not be able to complete the next change of direction without changing lane.

During the change of direction, new lanes may be added.

ⓘ Bus lanes are also shown.
Lane recommendations can also be displayed in the Instrument Display and in the Head-up Display.

Using motorway information

Requirements:

- The Motorway information option is switched on (→ page 322).

When driving on the motorway, upcoming motorway facilities 1 and available service facilities 2 are shown in the overview. These include filling stations, car parks, service stations and motorway exits, for example.

▶ **To open the display:** select [>].
The entries are sorted according to increasing distance from the current vehicle position.

▶ Select an entry.

▶ Select a service facility from the list.
The details are displayed. The map shows the position and the driving time to this location.

The following functions can be used in the detailed display, for example:

- Search for a POI in the vicinity.
- Save the destination.
- Place a call at the destination.

▶ Calculate the route (→ page 299).

Destination reached

Once the destination is reached, you will see the [🏁] chequered flag. Route guidance is finished.

When an intermediate destination has been reached, you will see the intermediate destination flag with the number of your [⊙] intermediate destination. After this, route guidance is continued.

Switching navigation announcements on/off

▶ **To switch off:** turn the volume control on the steering wheel or next to the touchpad during a navigation announcement (→ page 275).
The Spoken driving recommendations have been deactivated. message appears.

or

▶ Show the navigation menu (→ page 292).

▶ Select [🔊].
The symbol changes to [🔇].

▶ **To activate:** select [🔇].
The current navigation announcement is played.
The symbol changes to [🔊].

ⓘ This function can be added and called up from the favourites within the navigation category.

Switching navigation announcements on/off during a phone call

▶ Press the [⌂] button on the steering wheel or on the touchpad.

or

▶ Briefly press [⌂] in the multimedia system display.

▶ Select Settings.

▶ Select System.

▶ Select Audio.

▶ Select Navigation and traffic announcements.

▶ Switch Driving recommendations during call on or off.

Adjusting the volume of navigation announcements

Multimedia system:

[⌂] ▸▸ Settings ▸▸ System ▸▸ Audio ▸▸ Navigation and traffic announcements

▶ Select Fahrempfehlungslautstärke (Driving recommendation volume).

▶ Set the volume.

Route guidance is active

▶ Turn the volume control on the steering wheel or next to the touchpad during a navigation announcement.

Switching audio fadeout on/off during navigation announcements

▶ Press the [⌂] button on the steering wheel or on the touchpad.

or

▶ Briefly press [⌂] in the multimedia system display.

▶ Select Settings.
▶ Select System.
▶ Select Audio.
▶ Switch Audio fadeout on or off.

Repeating navigation announcements

Requirements:
- a route has already been created.
- route guidance is active.

Multimedia system:
→ Navigation (Navigation)

▶ Select [icon].
▶ Select [icon].
The current navigation announcement is repeated.

ⓘ This function can be added and called up from the favourites within the navigation category.

Cancelling route guidance

Requirements:
- a route has been created.
- route guidance is active.

▶ Show the navigation menu.
▶ Select [icon].

Route guidance to an off-road destination
An off-road destination is within the digital map. The map contains no roads that lead to the destination.

You can enter geo-coordinates or off-road destinations on the map. Route guidance guides you for as long as possible with navigation announcements and displays on roads that are known to the multimedia system.

Shortly before you reach the last known position on the map, you will hear the "Please follow the direction arrow" announcement, for example. The display shows a direction arrow and the linear distance to the destination.

Route guidance from an off-road location to a destination
In an off-road position, the current vehicle position is located within the digital map on roads that are not available.

The following displays appear when route guidance begins:
- A message appears that the road is not on the map.
- A direction arrow showing the linear direction to the POI.

When the vehicle is back on a road known to the multimedia system, route guidance continues as normal.

Off-road status during route guidance
Due to roadworks, for example, there may be differences between the data on the digital map and the actual course of the road. In such cases, the multimedia system will temporarily be unable to locate the vehicle's current position on the digital map. The vehicle is off-road.

The following displays appear when the vehicle is off-road:
- A message appears that the road is not on the map.
- A direction arrow showing the linear direction to the POI.

When the vehicle is back on a road known to the multimedia system, route guidance continues as normal.

Destination

Saving the current vehicle position

Multimedia system:

↳ [⌂] ▸▸ Navigation (Navigation) ▸▸ Route Icon ▸▸ Position

▶ Select Store position.
The current vehicle position is saved to the "Previous destinations" memory.

Editing the previous destinations

Multimedia system:

↳ [⌂] ▸▸ Navigation (Navigation) ▸▸ [🔍] Where to? ▸▸ PREV. DESTINATIONS

The following destinations can be edited:

- Previous destinations and routes
- Destination suggestions

Requirements: the Learn from location history option is activated for your profile (→ page 269).

The multimedia system has gathered sufficient data in order to show destination suggestions.

- External destinations and routes

▶ **To no longer display a destination suggestion:** select [▼] for a destination suggestion.

▶ Select Do not suggest.

Saving the last destination as a favourite

ⓘ After saving, the destination can be called up via the favourites (→ page 271).

▶ Select [▼] for a destination.

▶ Select Save as favourite.

▶ **To save as a favourite:** select Save as favourite .

▶ **To save as "Home" address:** select Save as "My home" .

▶ **To save as "Work" address:** select Save as "My work" .

Deleting a previous destination

▶ **To delete a destination:** select [▼] for the previous destination.

▶ Select Delete.

▶ Select Yes.

▶ **To delete all destinations:** select [⚙].

▶ Select Delete all.

▶ Select Yes.

Using external destinations and routes

External destinations and routes can be received from the following sources, for example:

- Mercedes-Benz Apps
- door-to-door navigation

A prompt appears on the multimedia display. Received destinations and routes are saved in the previous destinations.

▶ **A destination has been received:** select Yes.

▶ Calculate the route.

▶ If route guidance is already active, select Set as intermediate dest. or Start new route guidance.

or

▶ If a destination was received with photo information, select Start route guidance.

▶ Calculate the route.

or

▶ If a destination has been received from an app, select Details.

▶ Calculate the route.

▶ **A route has been received:** select Yes.

▶ Select Start route guidance from the beginning or Start route guidance from current location.
Route guidance starts from the selected position.

Route guidance with current traffic reports

Traffic information overview

ⓘ The services are not available in every country.

Traffic reports can be received with the following services:

- Live Traffic Information
- FM RDS-TMC

  It is not possible to use both services simultaneously.

  Live Traffic Information or FM RDS-TMC is displayed with a symbol.

ⓘ Hazard warnings can be received using the Car-to-X service.

ⓘ There may be differences between the traffic reports received and the actual road and traffic conditions.

Important information on Live Traffic Information:

- Current traffic reports are received via the Internet connection (for selected countries).
- The traffic situation is updated at short, regular intervals.
- In selected countries, the subscription service is available free of charge for a period of three years from the manufacturing date.

  Subscription information shows the status (→ page 314).

Registering Live Traffic Information

- The service must be registered with Mercedes me (→ page 314):

  This secures the free-of-charge period of three years.

Information on the vehicle's position is regularly sent to Daimler AG. The data is immediately rendered anonymous by Daimler AG and forwarded to the traffic data provider. Using this data, traffic reports relevant to the vehicle's position are sent to the vehicle. The vehicle acts as a sensor for the flow of traffic and helps to improve the quality of the traffic reports.

If you do not want to transmit the vehicle position, you have the following options:

- You deactivate the service in the Mercedes me portal.
- You have the service deactivated at a Mercedes-Benz service centre.

Useful information on FM RDS-TMC:

- A FM RDS-TMC radio station broadcasts traffic reports alongside the radio programme.
- FM RDS-TMC is not available in all countries.

Displaying subscription information

Requirements:

- The vehicle is equipped with Live Traffic Information.

Multimedia system:

→ [⌂] ▸▸ Navigation ▸▸ Route Icon ▸▸ Traffic

▶ **To display manually:** select Live Traffic Subscription Info.

Depending on the status, one of the following messages appears:

- the traffic data supplier's logo and the validity of the subscription are displayed.
- the logo of the traffic data provider is shown. The subscription is valid.
- the logo of the traffic data provider is shown. The subscription has expired.

The subscription expiry date is automatically displayed:

- one month before the expiry date
- one week before the expiry date
- on the expiry date

ⓘ The subscription can be extended (→ page 315).

Registering Live Traffic Information

Requirements:

- The vehicle is equipped with Live Traffic Information.
- You have a user account on the Mercedes me website.

The Live Traffic Information service must be registered. This secures the full period of three years.

▶ Create a user account at Mercedes me at: http://www.mercedes.me. A valid email address is required for this.

▶ Register the vehicle using the vehicle identification number (VIN).

▶ **To carry out the registration yourself:** connect the vehicle with your Mercedes me user account in the Mercedes me portal.
A code is sent to the multimedia system.

▶ Enter the code into the multimedia system.

▶ Accept the general and specific terms of use.

▶ **Registration in the Mercedes-Benz service centre:** have the connection carried out in a Mercedes-Benz service centre.

Extending a subscription

Requirements:
- The vehicle is equipped with Live Traffic Information.
- You have a user account on the Mercedes me website.

▶ Call up the Mercedes me website.
▶ Call up the Mercedes me user account.
▶ Switch to the Mercedes me connect online store via the linked vehicle.
▶ Select the Live Traffic Information service.
▶ Select the renewal period.
▶ Add the product to the shopping basket.
▶ Accept the general and specific terms of use. Live Traffic Information remains activated for the selected extension period. Activation begins on the date of extension.

Showing traffic information

Requirements:
- The Traffic display is switched on (→ page 316).
- The following traffic displays are switched on (→ page 316):

  Incidents

  Freier Verkehrsfluss (Free traffic flow)

  Delay

Multimedia system:

▶ Select Navigation (Navigation).

The map shows the following traffic information:
- traffic incidents, for example:
  - roadworks
  - road blocks
  - warning messages

  When route guidance is active, the symbols for traffic incidents will be shown in colour on the route. Off the route they are grey.
- warning message symbols:
  - symbol ⚠
  - road safety notes, e.g. when approaching the end of a traffic jam

    If the vehicle approaches a danger area on the route, a warning message is displayed on the map. In addition, an audible notification can follow a hazard warning.
- traffic flow information:
  - traffic jam (red line)
  - congested traffic conditions (orange line)
  - slow-moving traffic (yellow line)
  - free-flowing traffic (green line)
- display for traffic delays on the route lasting at least one minute

Displaying traffic incidents

Requirements:

- The Incidents display is switched on (→ page 316).

Multimedia system:

→ [⌂] ▸▸ Navigation (Navigation) ▸▸ Route symbol ▸▸ Traffic

▶ Select Traffic messages 3.
The list is sorted according to distance and shows the traffic incidents received.

The traffic incidents on the route are shown first.

A traffic incident shows the following information:

- Street number
- Traffic incident symbol
- Cause
- Distance from current vehicle position

▶ Select a traffic incident.
The detailed information, for example the route section, is shown.

Showing traffic incidents in the vicinity of the map

▶ Select a traffic incident symbol on the map.
The details about the traffic incident are displayed.

▶ Select [•••].

▶ Select Traffic incidents in vicinity.
The map shows the traffic incident symbols in the vicinity.

Traffic incident information is displayed in the status line:

- Traffic incident symbol
- Cause of the traffic incident, e.g. construction work
- Warning message (highlighted red)

▶ **To select a traffic incident symbol:** select [<] or [>].

▶ **To select the map section:** tap on the multimedia system display.

or

▶ Press the Touch Control or the touchpad.

▶ Move the map

▶ **To return to the navigation map:** tap on [⇦].

or

▶ Press the [⇦] button on the Touch Control or on the touchpad.

Switching the traffic information display on

Multimedia system:

→ [⌂] ▸▸ Navigation ▸▸ [⚙]

▶ Activate Traffic.
With this option additional traffic flow information and delays can be shown.

Activating Incidents, Free Flow and Delay

▶ Select Advanced settings.

▶ In the TRAFFIC category, activate the Incidents, Freier Verkehrsfluss (Free traffic flow) and Delay entries.
If traffic information has been received, then traffic incidents such as roadworks, road blocks, local area reports (e.g. fog) and warning messages are displayed.

The traffic delay is displayed for the current route. Traffic delays lasting one minute or longer are taken into consideration.

Showing local area messages

Multimedia system:

→ [⌂] ▸▸ Navigation ▸▸ Route Icon ▸▸ Traffic

▶ Select Area messages.
Local area messages are shown, for example fog or heavy rain.

▶ Select a local area message.
The details are displayed.

Accepting a detour recommendation after a prompt

Requirements:

- AFTER ASKING is activated (→ page 300).
- route guidance is active.
- there are traffic reports for the current route.

If a new route with a shorter driving time is determined, the current and new routes will be shown.

ⓘ The notification is shown in another application. Confirm the notification.

▶ **To accept the new route:** select Accept recommended detour.

▶ **To maintain the current route:** select Keep to current route.

Car-to-X-Communication

Car-to-X-Communication overview

Requirements:

- The vehicle is equipped with a multimedia system featuring navigation and a communication module with an activated, integrated SIM card.
- Car-to-X-Communication is activated.

ⓘ Car-to-X-Communication is available in selected countries.

The communication module automatically establishes an Internet connection once the ignition is switched on. If there are any hazard warnings, they will be provided shortly thereafter. Depending on the mobile phone connection, the provision takes place from within a second up to about a minute.

- Hazards are recognised automatically be the vehicle or may be reported by the driver. These are then sent to vehicles with Car-to-X-Communication in the immediate vicinity.
- Current and precise details relating to hazard spots near the vehicle's current position are received.

  This gives you sufficient time to adapt your driving style to the traffic conditions.

The use of Car-to-X-Communication requires the regular transmission of vehicle data to Daimler AG. The data is then immediately pseudonymised by Daimler AG. The vehicle data is deleted after an appropriate amount of time has elapsed (several weeks) and is not stored permanently.

ⓘ Data which serves as identification is replaced during the pseudonymisation process. In this way, your identity is protected against access by unauthorised third parties.

Displaying hazard warnings

Multimedia system:

▶ Select Navigation (Navigation).
If hazard warnings are available these will be shown on the map.

The following hazard warnings are shown on the map:

- broken-down vehicles
- accidents
- hazardous weather
- general hazards
- hazard warning lights, if activated
- mobile roadworks

  The display is not available in all regions.

  In the Federal Republic of Germany the display is currently available in the Federal State of Hesse.

ⓘ If the vehicle is approaching a hazard spot with a vehicle speed of at least 60 km/h, the voice output "Traffic incident ahead" is issued.

The voice output is not issued for hazardous weather.

Sending hazard warnings

Automatically detected hazard warnings are sent by the vehicle.

▶ **To send hazard warnings yourself:** select ▶ Navigation (Navigation) ▶ Route Icon ▶ Traffic.

▶ Select Traffic incident.
A prompt is shown.

▶ Select Yes.
The Thank you for supporting accident prevention. message appears.

Route guidance with augmented reality (AR)

Activating route guidance with augmented reality

Multimedia system:

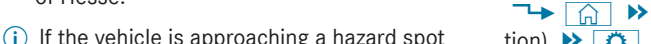

▶ Activate Augmented Reality.

When the option is activated, the video image from the camera shows the driver's view in the multimedia system display.

You can also select the following options:

- The video image will always be shown with the visible objects during route guidance.
- The video image will be shown with the visible objects instead of the navigation map before a turning manoeuvre.

  After the turning manoeuvre, the navigation map will be shown again.

Examples of objects could be driving manoeuvre arrows, street names and house numbers, for example.

▶ Select Advanced settings.

▶ Select Augmented Reality.

▶ Select Always or When cornering.

Switching on display of POIs with augmented reality for route guidance

Requirements:

- Augmented reality is activated (→ page 318).

Multimedia system:

→ ⌂ ▸▸ Navigation (Navigation) ▸▸ ⚙ ▸▸ Advanced settings ▸▸ Augmented Reality

▶ Activate POI symbols.
When the option is switched on, the same POI symbols are shown in the video image as those configured for the navigation map.

Selecting a POI for route guidance with augmented reality

Requirements:
- Augmented reality is activated (→ page 318).
- The display of POIs is activated (→ page 318).

Multimedia system:

→ ⌂ ▸▸ Navigation (Navigation)

Selection of a POI is possible up to a vehicle speed of 50 km/h.

▶ Briefly press on a POI symbol.

or

▶ Select a POI when the next POIs are shown in a list during route guidance.
The detailed view appears.

▶ Calculate the route (→ page 299).

Activating displays of street names and house numbers for route guidance with augmented reality

Requirements:
- Augmented reality is activated (→ page 318).

Multimedia system:

→ ⌂ ▸▸ Navigation (Navigation) ▸▸ ⚙ ▸▸ Advanced settings ▸▸ Augmented Reality

▶ Activate Street names and Show house numbers.
During route guidance, street names and house numbers are shown as objects in the video image.

Switching on display of traffic lights with augmented reality for route guidance

Requirements:
- Augmented reality is activated (→ page 318).

Multimedia system:

→ ⌂ ▸▸ Navigation (Navigation) ▸▸ ⚙ ▸▸ Advanced settings ▸▸ Augmented Reality

The video image will be enlarged to show traffic lights under the following conditions:
- The vehicle is standing at a junction in first position in the lane.
- The option is switched on.

  When the vehicle pulls away the navigation map is shown again.

▶ Scroll up until TRAFFIC LIGHT INDICATOR is shown.

▶ Select Off, AFTER ASKING or Automatic.
If AFTER ASKING is set and a traffic light display is available, a message is shown. When the message is confirmed the video image shows a traffic light.

If Automatic is set the video image shows a traffic light if available.

Map and compass

Setting the map scale

Multimedia system:

→ [⌂] ▸▸ Navigation (Navigation)

Zooming in

▶ When the map is shown, tap twice quickly with one finger on the multimedia system display or the touchpad.

or

▶ Move two fingers apart on the multimedia system display or on the touchpad.

Zooming out

▶ Tap with two fingers on the multimedia system display or the touchpad.

or

▶ Move two fingers together on the multimedia system display or on the touchpad.

ⓘ You can set the unit of measurement of the map scale (→ page 286).

Moving the map

Multimedia system:

→ [⌂] ▸▸ Navigation (Navigation)

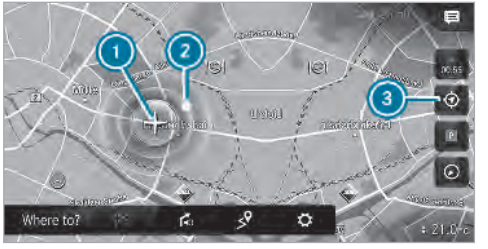

▶ **On the multimedia system display:** move a finger in any direction when the map is displayed.

▶ **On the touchpad:** call up the navigation menu by pressing.

▶ Swipe your finger up.
Symbol ① appears on the map. The map can be moved.

▶ Touch the control element and move your finger in any direction.
The map moves in the corresponding direction under the crosshair. The more you move your finger away from the starting position, the faster the map moves. The position of ② shows the direction and the speed the map is moving.

When the map has been moved the following information appears in the status line, for example:

- The distance from the vehicle's current position is shown.
- Information about the current map position, e.g. the name of the road, is shown.

If you select ③, the map with the current position is shown again.

The following functions can be used:

- Select a destination on the map (→ page 298).
- Select a POI (→ page 296).
- Show traffic incidents on the map (→ page 316).

Rotating the map

- Move the map a little on the multimedia system display with your finger.
- With two fingers, rotate anti-clockwise or clockwise.

Selecting the map orientation

Multimedia system:

→ [⌂] ▸▸ Navigation (Navigation) ▸▸ [⚙] ▸▸ Advanced settings

- Swipe up until MAP ORIENTATION is shown.
- Select the map orientation.
  The ● dot indicates the current setting.
  - 2D north up: the 2D map view is displayed so that north is always at the top.
  - 2D heading up: the 2D map view is aligned to the direction of travel.
  - 3D: the 3D map view is aligned to the direction of travel.

Alternative using quick-access

- Repeatedly tap or press on the [⊘] compass symbol on the map.
  The view changes in the sequence 3D, 2D heading up to 2D north up.

  If the map is moved, it can switch between 3D and 2D north up.

Selecting POI symbols for the map display

Multimedia system:

→ [⌂] ▸▸ Navigation (Navigation) ▸▸ [⚙] ▸▸ Advanced settings

POIs include filling stations and hotels, for example. These can be displayed as symbols on the map. Not all POIs are available everywhere.

Personal POIs are destinations which you have saved on a USB device, for example.

ⓘ The display of POI symbols on the map can be activated or deactivated as a favourite.

- Activate POI symbols.

Configuring the map display

- Select [>] POI symbols.
- Switch Show all on or off.
- Switch the categories (Quick POI) on or off.
- Select [>] ALL CATEGORIES.
- Switch Show all on or off.

or

- Select the categories and sub-categories (if available) [>].
- Switch the categories and sub-categories (if available) on or off.
  The POI symbols for the selected categories are displayed.

Configuring personal POIs

- Select [>] Personal POIs.
- Activate or deactivate the categories.
  When the category is switched on and the vehicle approaches a personal POI in this category, a visual and audible notification can be issued.
- **To set a notification when approaching:** select a category or a personal POI [▼].
  A menu opens.
- Switch Visual and Audible on or off.

Resetting personal POIs

▶ Select ⚙.

▶ Select RESET.
The settings are reset to the standard settings.

Selecting text information

Multimedia system:

→ 🏠 ▸▸ Navigation (Navigation) ▸▸ ⚙ ▸▸ Advanced settings

▶ Scroll up until TEXT INFORMATION is shown.

▶ Select Current street, Geo-coordinates or None.
Current street shows the street you are currently driving on at the bottom of the display.

When the map is moved, the street name, the POI name or the area name appears under the crosshair.

Geo-coordinates displays the following information:

- longitude and latitude
- elevation

  The elevation shown may deviate from the actual elevation.
- number of satellites from which a signal can be received

  When the map is moved, this information does not appear.

None switches the display off.

Switching motorway information on/off

Multimedia system:

→ 🏠 ▸▸ Navigation (Navigation) ▸▸ ⚙

▶ Switch Motorway information on or off.
When the option is switched on, additional information about the motorway facilities ahead appears during the motorway journey. These include car parks, service stations and motorway exits, for example.

Displaying the next intersecting street

Requirements:

- Route guidance is not active.

Multimedia system:

→ 🏠 ▸▸ Navigation (Navigation) ▸▸ ⚙ ▸▸ Advanced settings

▶ Swipe up until TEXT INFORMATION is shown.

▶ Activate Next intersecting street.
If the function is switched on and the journey continues without route guidance, the name of the next intersecting street will be displayed at the upper edge of the display.

Displaying the map version

Multimedia system:

→ 🏠 ▸▸ Navigation (Navigation) ▸▸ ⚙ ▸▸ Advanced settings

▶ Swipe upwards and select Map version.

ⓘ Information about new versions of the digital map can be obtained from a Mercedes-Benz service centre.

Overview of avoiding an area

You can define areas along a route that you would like to avoid.

Motorways or multi-lane expressways, which are routed through an area to be avoided are taken into account for the route.

Avoiding a new area
Multimedia system:
→ [⌂] ▸▸ Navigation (Navigation) ▸▸ Route Icon ▸▸ Avoid options ▸▸ Avoid areas

- Select Avoid new area.
- **To start in the map:** select Using map.
- Move the map (→ page 320).
- **To start via destination search:** select Search destination.
- Enter the address (→ page 293).
- Select the destination in the list or accept with [OK].
  The map appears.
- **To show an area:** tap or press on the control element.
  A red rectangle appears. This designates the area that should be avoided.
- **To change the map scale:** move two fingers apart or together on the multimedia system display or on the touchpad.
  The map is zoomed in or out.
- **To set an area:** press on the central control element.
  The area is entered into the list.

Changing an area
Multimedia system:
→ [⌂] ▸▸ Navigation (Navigation) ▸▸ Route Icon ▸▸ Avoid options ▸▸ Avoid areas

- Select an area in the list.
- Select Edit.

Moving the area on the map

- Swipe in any direction on the central control element.

Changing the size of the area

- Press on the central control element.
- Swipe up or down on the central control element.
- Press on the central control element.

Taking the area for the route into account

- Select an area in the list.
- Activate Avoid area.
  If route guidance is active, a new route is calculated.

  If there is no route yet, the setting is carried over to the next route guidance.

  The route can include an area that is to be avoided in the following cases:
  - the destination is located in an area that is to be avoided
  - there is no sensible alternative route

Deleting one or all areas
Multimedia system:
→ [⌂] ▸▸ Navigation (Navigation) ▸▸ Route Icon ▸▸ Avoid options ▸▸ Avoid areas

Deleting an area

- Select an area in the list.
- Select Delete.

▶ Confirm the prompt with Yes.

Deleting all areas

▶ Select ⚙.

▶ Select Delete all.

▶ Confirm the prompt with Yes.

Updating the map data

Updating at the Mercedes-Benz Service Centre

The digital maps generated by the map software become outdated in the same way as conventional road maps. Optimal route guidance can only be provided by the navigation system in conjunction with the most up-to-date map data. Information about new versions of the digital map can be obtained from a Mercedes-Benz service centre.

You can receive updates to the digital map there.

Online map update

ⓘ The online map update service is not available in all countries.

The online map update service from Mercedes me connect can be used to update the map data.

You can use the following update options:

- for one region (automatic map update)
- for several or all regions (manual map update)

  The map data will first be downloaded onto a storage medium and then updated on the multimedia system.

The service must be activated at a Mercedes-Benz service centre in order to use automatic updates.

Further information on the online map update http://www.mercedes.me.

Further information on updates: http://manuals.daimler.com/baix/cars/connectme/de_DE/index.html.

Map data

Your vehicle is supplied with map data at the factory. Depending on the country, map data for your region is either pre-installed or the map data is supplied on a data storage medium. You do not require an activation code for the map data which is provided with your vehicle.

If the map data on your vehicle has been installed at the factory and you wish to reinstall it, you do not need to enter the activation code.

An activation code is required for purchased map data.

Observe the following when entering the activation code:

- The activation code can be used for one vehicle
- The activation code is not transferable
- The activation code has six digits

In the event of the following problems, please contact a Mercedes-Benz service centre:

- The multimedia system does not accept the activation code
- You have lost the activation code

Displaying the compass
Multimedia system:
→ [⌂] ▸▸ Navigation (Navigation) ▸▸ Route Icon ▸▸ Position

▶ Select Compass.

The compass display shows the following information:

- the current direction of travel with bearing (360° format) and compass direction
- longitude and latitude coordinates in degrees, minutes and seconds
- height (rounded)
- number of GPS satellites from which a signal can be received

Displaying Qibla
Multimedia system:
→ [⌂] ▸▸ Navigation (Navigation) ▸▸ Route Icon ▸▸ Position

▶ Select Qibla.
The arrow on the compass shows the direction to Mecca in relation to the current direction of travel.

The number of satellites received is shown.

ⓘ This function is not available in all countries.

Setting the map scale automatically
Multimedia system:
→ [⌂] ▸▸ Navigation (Navigation) ▸▸ [⚙] ▸▸ Advanced settings

The map scale is set automatically depending on your driving speed and the type of road.

▶ Activate Auto zoom.

ⓘ The automatically selected map scale can be changed manually. After a few seconds, this is automatically reset.

Displaying the satellite map
Multimedia system:
→ [⌂] ▸▸ Navigation (Navigation) ▸▸ [⚙] ▸▸ Advanced settings

▶ Switch Satellite map on or off.
If the option is activated, satellite maps are displayed in map scales from 2 km.

If the option is deactivated, satellite maps are not displayed in map scales from 2 km to 20 km.

ⓘ The satellite maps for these map scales are not available in all countries.

Showing the range

Requirements:
- The function is available.

Multimedia system:
→ [⌂] ▸▸ Navigation (Navigation) ▸▸ [⚙] ▸▸ Advanced settings

When the function is active the range is shown on the map.

- For petrol and diesel vehicles: green display
- For hybrid vehicles:
  Total range: green display
  Electrical range: blue display

When the lower reserve capacity is reached then the range display on the map is switched off.

▶ Swipe upwards and switch on Range.

Displaying weather information and other map contents

Multimedia system:

→ [⌂] ▸▸ Navigation (Navigation) ▸▸ [⚙] ▸▸ Advanced settings

▶ Select ONLINE MAP CONTENTS.
The available services are displayed. The services are provided by Mercedes me connect.

▶ Switch on a service, e.g. Weather.
Current weather information is displayed on the navigation map, e.g. temperature or cloud cover. The service information, e.g. weather symbols, is not shown in all map scales.

Further information about available services and about displaying information in the map scales: http://www.mercedes.me

The services are not available in every country.

ⓘ Requirements:

- You have a user account for the Mercedes me portal.
- The service is available.
- The service is activated.

Further information can be found at: http://www.mercedes.me

Showing map view in the multifunction display of the instrument cluster

Multimedia system:

→ [⌂] ▸▸ Navigation (Navigation) ▸▸ [⚙] ▸▸ Advanced settings

▶ Swipe upwards and select Map view in instrument cluster.

▶ **To set the map scale automatically:** switch Auto zoom on or off.
When the option is activated, the map scale is set automatically depending on your driving speed and the type of road.

▶ **To select the map orientation:** select the map orientation.
The ● dot indicates the current setting.

- 2D heading up: the 2D map view is aligned to the direction of travel.
- 2D north up: the 2D map view is displayed so that north is always at the top.
- 3D: the 3D map view is aligned to the direction of travel.

Parking service

Selecting parking options

Requirements:

- The navigation services option is available, subscribed to and activated in the Mercedes me portal.

  The parking service is within the scope of the navigation service.
- Parking is activated (→ page 327).

Multimedia system:

→ [⌂] ▸▸ Navigation (Navigation)

▶ Tap on [P] in the map.

▶ Select a parking option.
The following information is displayed (if available):

- Destination address, distance from current vehicle position and arrival time
- Information on the multi-storey car park/car park

  For example, opening times, parking changes, current occupancy, maximum parking time, maximum access height.
- Available payment options (Mercedes pay, coins, bank notes, cards)
- Details on parking tariffs
- Number of available parking spaces
- Payment method (e.g. at the parking machine)
- Services/facilities at the parking option
- Telephone number

▶ Calculating the route (→ page 299).

The following functions can also be selected (if available):

- Search for POIs in the vicinity.
- Save the destination.
- Place a call at the destination.
- Share the destination using NFC or QR code.
- Call up the web address.
- Show the destination on the map.

Displaying parking options on the map

Requirements:

- The navigation services option is available, subscribed to and activated in the Mercedes me portal.

  The parking service is within the scope of the navigation service.

Multimedia system:

→ [⌂] ▸▸ Navigation (Navigation) ▸▸ [⚙]

▶ Activate Parking.
The parking options within the vicinity of the current vehicle position are shown.

Telephone

Telephony

Telephone menu overview

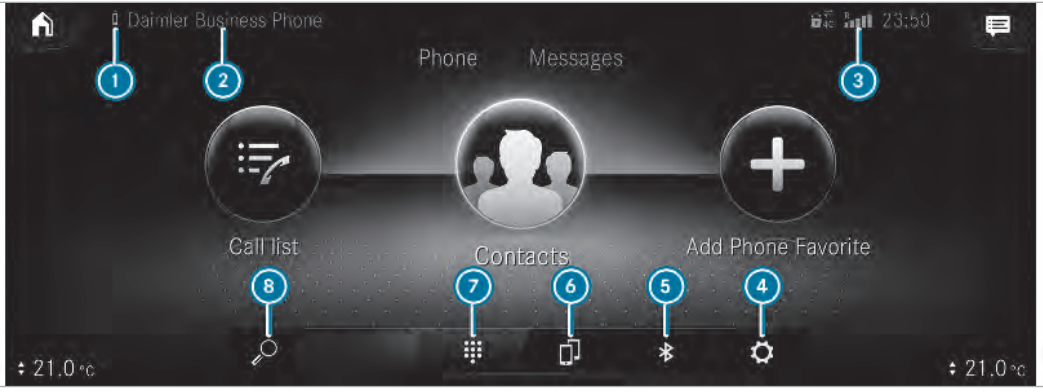

1. Battery status of the connected mobile phone
2. Bluetooth® device name of the currently connected mobile phone/the mobile phone in the foreground (two phone mode)
3. Signal strength of the mobile phone network
4. Options
5. Device manager
6. To switch mobile phones (two phone mode)
7. Numerical pad
8. contact search

Bluetooth® profile overview

Bluetooth® profile of the mobile phone	Function
PBAP (**P**hone **B**ook **A**ccess **P**rofile)	Contacts are automatically displayed in the multimedia system
MAP (**M**essage **A**ccess **P**rofile)	Message functions can be used

Telephony operating modes overview

The following telephone operating modes are available:

- A mobile phone is connected to the multimedia system via Bluetooth® (→ page 330).
- Two mobile phones are connected with the multimedia system via Bluetooth® (two phone mode).
  - You can use all the functions of the multimedia system with the mobile phone in the foreground.
  - You can receive incoming calls and messages with the mobile phone in the background.

    You can interchange the mobile phone in the foreground and background any time (→ page 331).

ⓘ Irrespective of this, Bluetooth® audio functionality can by used with any mobile phone (→ page 365).

Notes on telephony

⚠ **WARNING** Risk of distraction from operating integrated communication equipment while the vehicle is in motion

If you operate communication equipment integrated in the vehicle when driving, you will be distracted from the traffic situation. This could also cause you to lose control of the vehicle.

▶ Only operate this equipment when the traffic situation permits.

▶ If you cannot be sure of this, stop the vehicle whilst paying attention to road and traffic conditions and operate the equipment with the vehicle stationary.

⚠ **WARNING** Risk of distraction from operating mobile communication equipment while the vehicle is in motion

If you operate communication equipment integrated in the vehicle when driving, you will be distracted from the traffic situation. This could also cause you to lose control of the vehicle.

Only operate this equipment when the vehicle is stationary.

You must observe the legal requirements for the country in which you are currently driving when operating mobile communication equipment in the vehicle.
Further information can be obtained from a Mercedes-Benz service centre or at: http://www.mercedes-benz.com/connect.

Information on telephony

The following situations can lead to the call being disconnected while the vehicle is in motion:

- there is insufficient network coverage in the area
- you move from one transmission/reception station to another and no communication channels are free
- the SIM card used is not compatible with the network available
- a mobile phone with "Twincard" is logged into the network with the second SIM card at the same time

HD Voice®:

- To improve voice quality, the multimedia system supports telephone calls in HD Voice®.
- In order to use this function, the mobile phones and the mobile phone network provider of the person you are calling must support HD Voice®.

Depending on the quality of the connection, the voice quality may fluctuate.

Connecting a mobile phone

Requirements:

- Bluetooth® is activated on the mobile phone (see the manufacturer's operating instructions).
- Bluetooth® is activated on the multimedia system (→ page 283).

Multimedia system:

→ ⌂ ▸▸ Telephone ▸▸ ᛒ

Searching for a mobile phone

▶ Select Connect new device.

Connecting a mobile phone (authorisation using Secure Simple Pairing)

▶ Select a mobile phone.
A code is displayed in the multimedia system and on the mobile phone.

▶ **If the codes match:** confirm the code on the mobile phone.

ⓘ For older mobile phone models, enter a one to sixteen-digit number code on the mobile phone and on the multimedia system for authorisation.

ⓘ Up to 15 mobile phones can be authorised on the multimedia system.
Authorised mobile phones are reconnected automatically.

Connecting a second mobile phone (two phone mode)

Requirements:

- At least one mobile phone is already connected to the multimedia system via Bluetooth®.

Multimedia system:

→ ⌂ ▸▸ Telephone ▸▸ ᛒ

▶ Select Connect new device.

▶ Select the mobile phone.

▶ Select With <Mobile phone>.
The selected mobile phone is connected to the multimedia system.

Functions of the mobile phone in two phone mode

Functions overview

Functions of the mobile phone in the foreground	Functions of the mobile phone in the background
Full range of functions	Incoming calls and messages

Interchanging mobile phones (two phone mode)

Multimedia system:

Telephone

▶ Select .

You can also interchange the two connected mobile phones in the following submenus:

- Contacts
- Call list
- Messages

After interchanging the mobile phones in one of the submenus, the mobile phone in the foreground is replaced by the mobile phone in the background.

Changing the function of a mobile phone

Multimedia system:

Telephone

Activating a function

▶ Select a grey symbol in the line of a mobile phone.
The corresponding function is activated.

Deactivating a function

▶ **A function is active:** select the coloured symbol in the line of a mobile phone.
The mobile phone is disconnected from the multimedia system.

▶ **Several functions are active:** select a coloured symbol in the line of a mobile phone.
The corresponding function is deactivated.

Disconnecting/deauthorising a mobile phone

Multimedia system:

Telephone

▶ Select ••• in the line of the mobile phone.

▶ **To disconnect:** select Disconnect.
If applicable, the mobile phone will be automatically reconnected when the vehicle is next started.

▶ **To deauthorise:** select De-authorise.

Information on Near Field Communication (NFC)

NFC enables short-range wireless data transfer or (re)connection of a mobile phone with the multimedia system.

The following functions are available without having authorised a mobile phone:

- Transferring a URL or a contact to be viewed in the multimedia system (see the manufacturer's operating instructions).
- Setting up the vehicle's Wi-Fi access data via the system settings (→ page 285).

Further information can be obtained at: http://www.mercedes-benz.com/connect

Using the mobile phone with Near Field Communication (NFC)

Requirements:

- NFC is activated on the mobile phone (see the manufacturer's operating instructions)
- The mobile phone's screen is switched on and unlocked (see the manufacturer's operating instructions)

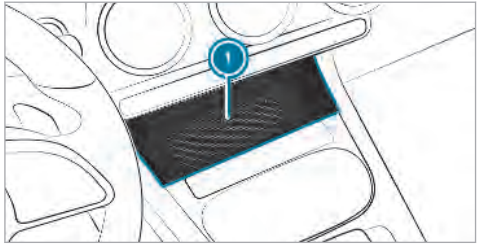

▶ **To connect a mobile phone:** hold the NFC area of the mobile phone (see manufacturer's operating instructions) on mat ① or place the mobile phone on it.

▶ Follow the additional prompts on the multimedia system display to connect the mobile phone. Connect the mobile phone in single telephone mode (→ page 330). Connect the mobile phone in two phone mode (→ page 330).

▶ **To replace a mobile phone:** hold the NFC area of the mobile phone (see manufacturer's operating instructions) on mat ① or place the mobile phone on it.

▶ Follow the additional prompts on the multimedia system display to replace the mobile phone in one or two phone mode (→ page 331).

▶ If required, confirm the prompts on your mobile phone (see the manufacturer's operating instructions).

Further information can be found at: http://www.mercedes-benz.com/connect

Setting the reception and transmission volume

Requirements:

- A mobile phone is connected (→ page 330).

Multimedia system:

↳ ⌂ ▸▸ Telephone ▸▸ ✱

This function ensures optimal language quality.

▶ Select ••• in the line of the mobile phone.

▶ Select Reception volume, Transmission volume or Ringtone.

▶ Set the volume.

Further information on the recommended reception and transmission volume: http://www.mercedes-benz.com/connect

Setting the ringtone

Multimedia system:

↳ ⌂ ▸▸ Telephone ▸▸ ✱

▶ Select ••• in the line of the mobile phone.

▶ Select Ringtone.

▶ Set the ringtone.

ⓘ If the mobile phone supports the transfer of the ringtone, you will hear the ringtone of the mobile phone instead of that of the vehicle.

Starting/stopping mobile phone voice recognition

Requirements:

- The mobile phone in the foreground is connected with the multimedia system (→ page 330).

Starting mobile phone voice recognition

▶ Press and hold the button on the multifunction steering wheel for more than one second.
You can use mobile phone voice recognition.

Stopping mobile phone voice recognition

▶ Press the or button on the multifunction steering wheel.

ⓘ If a mobile phone is connected via Smartphone Integration, the voice recognition of this mobile phone is started or stopped.

Calls

Telephone operation

Multimedia system:

→ ▸▸ Telephone

Making a call by entering the numbers

▶ Select .

▶ Enter a number.

▶ Select .
The call is made.

Accepting a call

▶ Select Accept.

Rejecting a call

▶ Select Reject.

Ending a call

▶ Select .

Activating functions during a call

The following functions are available during a call:

- End call
- Microphone off
- Numerical keypad (show to send DTMF tones)
- Add call
- Transfer to phone (an active call in hands-free mode is transferred over to the telephone)

▶ Select a function.

Conducting calls with several participants

Requirements:

- There is an active call (→ page 333).
- Another call is being made.

Switching between calls

▶ Select the contact.
The selected call is active. The other call is on hold.

Activating or ending a call on hold

▶ Select Continue call or End call.

Conducting a conference call

▶ Select Create conferen. call.
The new participant is included in the conference call.

Ending an active call

▶ Select End call.

ⓘ On some mobile phones, the call on hold is activated as soon as the active call is ended.

Accepting/rejecting a waiting call

Requirements:

- There is an active call (→ page 333).

If you receive a call while already in a call, a message is displayed.

Depending on the mobile phone and network operator you will hear a call-waiting sound. In addition, in two phone mode you will hear an acoustic signal when the call goes through to the other (not yet active) mobile phone.

▶ Select Accept.
The incoming call is active.

If only one mobile phone is connected with the multimedia system, the previous call will be put on hold.

If during a call you accept a call with the other mobile phone when in two phone mode then the existing call is ended.

▶ Select Reject.

ⓘ This function and behaviour depends on your mobile phone network provider and the mobile phone (see the manufacturer's operating instructions).

Contacts

Information about the contacts menu

The contacts menu contains all contacts from existing data sources, e.g. mobile phone or memory card.

Depending on the data source, you have the following number of contacts:

- Permanently saved contacts: 3,000 entries
- Contacts loaded from the mobile phone: 5,000 entries per mobile phone

From the contacts menu, you can perform the following actions:

- Make a call, for example call a contact (→ page 336)
- Navigation (→ page 298)
- Compose messages (→ page 339)
- Additional options(→ page 336)

If a mobile phone is connected to the multimedia system (→ page 330) and automatic call up (→ page 335) is activated, the mobile phone's contacts are displayed in the address book.

The multimedia system can show suggestions based on frequently used contacts as well as incoming and outgoing calls. (→ page 269). These are shown at the top of the contact list.

Downloading mobile phone contacts

Multimedia system:

Telephone ▸▸ Device settings

Automatically

▶ Activate Synchronise contacts automatically.

Manually

▶ Deactivate Synchronise contacts automatically.

▶ Select Synchronise contacts.

Calling up contacts

Multimedia system:

Telephone ▸▸

The following options can be used to search for contacts:

- searching by initials
- searching by name
- searching by phone number

▶ Enter characters into the search field.

▶ Select the contact.

A contact can contain the following details:

- phone numbers
- navigation addresses
- geo-coordinates
- Internet address
- E-mail address
- Voice Tag (if set)
- Relation (if set)

Editing the format of a contact's name

Multimedia system:

Telephone ▸▸ General settings ▸▸ Name format

The following options are available:

- Surname, first name
- Surname First name
- First name Surname

▶ Select an option.

Overview of importing contacts

Contacts from various sources

Source	Requirements:
USB device	The USB device is connected with the USB port.
Bluetooth® connection	If the sending of vCards via Bluetooth® is supported, vCards can be received on mobile phones or netbooks, for example. Bluetooth® is activated in the multimedia system and on the respective device (see the manufacturer's operating instructions).

Importing contacts into the contacts menu

Multimedia system:

Telephone ▸▸ General settings ▸▸ Import contacts

▶ Select an option.

Saving a mobile phone contact

Multimedia system:

Telephone ▸▸

▶ Select in the line of the mobile phone contact.

▶ Select •••.

▶ Select Save in vehicle.

▶ Select Yes.
The contact saved in the multimedia system is identified by the symbol.

Calling a contact

Multimedia system:

Telephone ▸▸

▶ Select Search contacts .

▶ Enter characters into the search field.

▶ Select the contact.

▶ Select the telephone number.
The number is dialled.

Selecting further options in the contacts menu

Multimedia system:

Telephone ▸▸

▶ Select in the line of the contact.

▶ Select •••.

Depending on the stored data, the following options are available:

- Add voice tag/Delete voice tag
- Set relationship/Remove relationship
- Send DTMF tones (for a number with DTMF tones)
  The function is available when a call is active.

▶ Select an option.

Selecting options for suggestions in the contacts menu

Requirements:

- a profile has been created (→ page 265).
- the Allow contact suggestions setting is switched on (→ page 269).

Multimedia system:

→ ⌂ ▸▸ Telephone

▶ Select Call list .

▶ Select ⊙ in the line of a suggested contact.

The following options are available:

- Save as favourite

  The suggestions are saved as global favourites and do not appear on the home screen.
- Do not suggest

▶ Select an option.

Deleting contacts

Requirements:

- The contacts are saved in the vehicle.
- To delete an individual contact, this has been imported manually into the vehicle.

Multimedia system:

→ ⌂ ▸▸ Telephone

Deleting all contacts

▶ Select ⚙.

▶ Select General settings.

▶ Select Delete contacts >.

▶ Select an option.

Deleting a contact

▶ Select 👥.

▶ Select > in the line of the contact.

▶ Select •••.

▶ Select Delete contacts.

▶ Select Yes.

Saving a contact as a favourite

Multimedia system:

→ ⌂ ▸▸ Telephone ▸▸ ⊕ Add favourite

▶ Select a contact.

▶ Select > in the line of the contact.

▶ Select the telephone number.
The contact is stored as a favourite on the home screen.

Deleting favourites

Multimedia system:

→ ⌂ ▸▸ Telephone

▶ Select a favourite on the home screen.

▶ Press and hold the favourite.

▶ Select Delete.

▶ Select Yes.

Deleting all favourites

▶ Select ⚙.

▶ Select Device settings.

▶ Select Delete all favourites.

▶ Select OK.

Call list

Overview of the call list

Depending on whether your mobile phone supports the PBAP Bluetooth® profile or not, this can have different effects on the presentation and functions of the call list.

If the PBAP Bluetooth® profile is supported, the effects are as follows:

- The call lists from the mobile phone are displayed in the multimedia system.
- When connecting the mobile phone, you may have to confirm the connection for the PBAP Bluetooth® profile.

If the PBAP Bluetooth® profile is not supported, the effects are as follows:

- The multimedia system generates a call list independently as soon as calls are made in the vehicle.
- The call list is not synchronised with the call lists in the mobile phone.

The multimedia system can show suggestions based on frequently used contacts as well as incoming and outgoing calls (→ page 269). These are shown at the top of the call list.

Making a call from the call list

Multimedia system:

→ ⌂ ▸▸ Telephone

▶ Select Call list .

▶ Select an entry.
The call is made.

Calling up additional options in the call list

Multimedia system:

→ ⌂ ▸▸ Telephone

▶ Select Call list .

▶ Select > in the line of an entry.
The following options are available:

- Open Contact (if the contact is saved)
- Send message

Selecting options for suggestions in the call list

Requirements:

- A profile has been created (→ page 265).
- The Allow contact suggestions setting is switched on (→ page 269).

Multimedia system:

→ ⌂ ▸▸ Telephone

▶ Select Call list .

▶ Select ⊙ in the line of a suggested entry.
The following options are available:

- Save as favourite
- Do not suggest

▶ Select an option.

Deleting the call list
Multimedia system:
→ [⌂] ▸▸ Telephone ▸▸ [⚙] ▸▸ Device settings

▶ Select Delete call lists.

▶ Select Yes.

ⓘ This function is only available if your mobile phone does not support the PBAP Bluetooth® profile.

Text messages

Overview of message functions
In the messages menu you can receive and send text messages.

If the connected mobile phone supports the Bluetooth® MAP profile, the message function can be used on the multimedia system.

You can obtain further information about settings and supported functions of Bluetooth®-capable mobile phones from a Mercedes-Benz service centre or at: http://www.mercedes-benz.com/connect

Some mobile phones require further settings after being connected to the multimedia system (see manufacturer's operating instructions).

Configuring displayed messages
Multimedia system:
→ [⌂] ▸▸ Telephone ▸▸ Messages

▶ Select [⚙].
The following options are available:
- All messages
- New and unread messages
- Messages while the vehicle is in motion
- Off (the message function is no longer available.)

▶ Select a setting.

Reading messages
Multimedia system:
→ [⌂] ▸▸ Telephone ▸▸ Messages

▶ Select a contact.
The messaging history with this contact is shown.

Reading a text message

▶ Select a message.

Using the read-aloud function

▶ Select a message.

▶ Select [🔊].
The message is read aloud.

Dictating and sending a new message

Requirements:
- There is an Internet connection.

Multimedia system:
→ [⌂] ▸▸ Telephone ▸▸ Messages

▶ [✉] Select a new message.

Adding a recipient

▶ Select ⊕.

▶ Select a contact.

Dictating text

▶ Select .
The dictating function is started.

▶ Say the message.
After the voice message has been processed, it is shown as text.

Sending a message

▶ Select .

ⓘ When the vehicle is stationary you can use the keyboard to write a message. No Internet connection is required to use the keyboard.

Replying to a message in the messaging history

Multimedia system:

→ ⌂ ▸▸ Telephone ▸▸ Messages

▶ Select a contact.
The messaging history opens.

▶ Dictate the text and send the message (→ page 339).

Using templates

Multimedia system:

→ ⌂ ▸▸ Telephone

▶ Select .

▶ Select Messages.

Using a template as a new message

▶ Select in the menu for a new message.

▶ Select a template.

Answering a message with a template

▶ Select a message sequence with a contact.

▶ Select .

▶ Select a template.

Forwarding a message

Multimedia system:

→ ⌂ ▸▸ Telephone ▸▸ Messages

▶ Select a contact.

▶ Select a message.

▶ Select •••.

▶ Select Forward.

Calling a message sender

Multimedia system:

→ ⌂ ▸▸ Telephone ▸▸ Messages

▶ Select a contact.

▶ Select •••.

▶ Select Call.

Using telephone numbers or URLs from a text message

Requirements:

- An Internet connection is required to call up a URL.

Multimedia system:

→ [⌂] ▸▸ Telephone ▸▸ Messages

▶ Select a contact.

▶ Select a message.

▶ Select a telephone number or a URL in the message.
If a URL is selected the web browser opens.

If a telephone number is selected the following options are available:

- Call
- Write new text message

▶ Select an option.

Deleting a message

Multimedia system:

→ [⌂] ▸▸ Telephone ▸▸ Messages

▶ Select a contact.

▶ Select a message.

▶ Select [•••].

▶ **To delete the message:** select Delete.

In Car Office

"In Car Office" functions

Using "In Car Office", you can connect your online services with the multimedia system.

The following functions are available:

- Display of upcoming meetings in the calendar
- Selection of a meeting as a destination in the navigation
- Display of upcoming telephone conferences
- Display of participants in a telephone conference
- Display and selection of calls to be made

ⓘ Please note that certain functions are only available when the vehicle is stationary.

Calling up In Car Office

Requirements:

- A mobile phone is connected to the multimedia system as the main telephone.
- You have a user account on the website from Mercedes me (http://www.mercedes.me).
- The "In Car Office" service is activated in the Mercedes me portal.
- You have a user account with an online service, for example Office 365.

▶ Select In Car Office.
You will see an appointments overview for the current day.

You can find the following displays in the appointments overview:

- All day: all-day appointment
- Lightning: appointment clash

Selecting a calendar entry function in "In Car Office"

Multimedia system:

→ [⌂] ▸▸ In Car Office ▸▸ Calendar ▸▸ [31]

▶ Select an appointment.

The following functions are available:

- [🔊] Read aloud

- Call
- Navigate
- Reject

▶ Select a function.

Selecting the functions of Tasks & Calls

Multimedia system:

→ ▸▸ In Car Office ▸▸ Tasks & calls

▶ Select an entry.

The following functions are available:

- Read aloud
- No translation
- Call

  This option is only available for calls.
- Delete

▶ Select an option.

Apple CarPlay™

Overview of Apple CarPlay™

WARNING Risk of distraction from information systems and communications equipment

If you operate information and communication equipment integrated in the vehicle when driving, you will be distracted from the traffic situation. This could also cause you to lose control of the vehicle.

▶ Only operate this equipment when the traffic situation permits.

▶ If you cannot be sure of this, stop the vehicle whilst paying attention to road and traffic conditions and operate the equipment with the vehicle stationary.

You must observe the legal requirements for the country in which you are currently driving when operating the multimedia system.

iPhone® functions can be used via the multimedia system using Apple CarPlay™. They are operated using the touchscreen, touchpad, Touch Control or the Siri® voice-operated control system. You can activate the voice-operated control system by pressing and holding the button on the multifunction steering wheel.

When using Apple CarPlay™ via the voice-operated control system, the multimedia system can still be operated via LINGUATRONIC (→ page 240).

Only one mobile phone at a time can be connected via Apple CarPlay™ to the multimedia system. Also for use of Apple CarPlay™ with two phone mode, only one additional mobile phone can be connected using Bluetooth® with the multimedia system.

The availability of Apple CarPlay™ may vary according to the country.

The service provider is responsible for this application and the services and content connected to it.

Information on Apple CarPlay™

When Apple CarPlay™ is being used, the iPod® media source is not available for the respective iPhone®.

Only one route guidance can be active at a time. If route guidance is active on the multimedia system, it is closed when route guidance is started on the mobile phone.

Connecting an iPhone® via Apple CarPlay™

Requirements:

- The current version of your device's operating system is being used (see the manufacturer's operating instructions).
- The full range of functions for Apple CarPlay™ is only available with an Internet connection.

▶ Connect the iPhone® to the USB port on the multimedia system using a suitable cable (→ page 365).

Accepting/rejecting the data protection regulations

A message with the data protection regulations appears.

▶ Select Accept & start.

ⓘ When the Apple CarPlay™ connection is active, you can switch Start automatically on or off.

Exiting Apple CarPlay™

▶ Press the button.

ⓘ If Apple CarPlay™ was not displayed in the foreground before disconnecting, the application starts in the background when reconnected. You can call up Apple CarPlay™ in the main menu.

Calling up Apple CarPlay™ sound settings

▶ Select Smartphone under the application.

Ending Apple CarPlay™

▶ Disconnect the connecting cable between the mobile phone and multimedia system. Mercedes-Benz recommends disconnecting the connecting cable only when the vehicle is stationary.

Android Auto

Android Auto overview

⚠ **WARNING** Risk of distraction from information systems and communications equipment

If you operate information and communication equipment integrated in the vehicle when driving, you will be distracted from the traffic situation. This could also cause you to lose control of the vehicle.

▶ Only operate this equipment when the traffic situation permits.

▶ If you cannot be sure of this, stop the vehicle whilst paying attention to road and traffic conditions and operate the equipment with the vehicle stationary.

You must observe the legal requirements for the country in which you are currently driving when operating the multimedia system.
Mobile phone functions can be used with Android Auto using the Android operating system on the multimedia system. It is operated

using the touchscreen or the voice-operated control system. You can activate the voice-operated control system by pressing and holding the button on the multifunction steering wheel.

When using Android Auto via the voice-operated control system, the multimedia system can still be operated via LINGUATRONIC (→ page 240).

Only one mobile phone at a time can be connected via Android Auto to the multimedia system. Also for use of Android Auto with two phone mode, only one additional mobile phone can be connected using Bluetooth® with the multimedia system.

The availability of Android Auto and Android Auto Apps may vary according to the country.

The service provider is responsible for this application and the services and content connected to it.

Information on Android Auto

If a mobile phone is used with Android Auto, USB access using the media menu is not possible for this mobile phone.

Only one route guidance can be active at a time. If route guidance is active on the multimedia system, it is closed when route guidance is started on the mobile phone.

Connecting a mobile phone via Android Auto

Requirements:

- The first activation of Android Auto on the multimedia system must be carried out when the vehicle is stationary for safety reasons.
- The mobile phone supports Android Auto from Android 5.0.
- The Android Auto app is installed on the mobile phone.
- In order to use the telephone functions, the mobile phone must be connected to the multimedia system via Bluetooth® (→ page 330).

  If there was no prior Internet connection, this is established with the use of the mobile phone with Android Auto.
- The mobile phone is connected to the multimedia system via the USB port using a suitable cable (→ page 365).
- The full range of functions for Android Auto is only possible with an Internet connection.

Multimedia system:

Smartphone ▸▸ Android Auto

Accepting/rejecting the data protection regulations

A message with the data protection regulations appears.

▶ Select Accept & start.

ⓘ When the Android Auto connection is active, you can switch Start automatically on or off.

Exiting Android Auto

▶ Press the button.

ⓘ If Android Auto was not displayed in the foreground before disconnecting, the application starts in the background when reconnected. You can call up Android Auto in the main menu.

Calling up the Android Auto sound settings

▶ Select Smartphone under the application.

Ending Android Auto

▶ Disconnect the connecting cable between the mobile phone and multimedia system. Mercedes-Benz recommends disconnecting the connecting cable only when the vehicle is stationary.

Transferred vehicle data with Android Auto and Apple CarPlay™

Overview of transferred vehicle data

When using Android Auto or Apple CarPlay™, certain vehicle data is transferred to the mobile phone. This enables you to get the best out of selected mobile phone services. Vehicle data is not directly accessible.

The following system information is transmitted:

- Software release of the multimedia system
- System ID (anonymised)

The transfer of this data is used to optimise communication between the vehicle and the mobile phone.

To do this, and to assign several vehicles to the mobile phone, a vehicle identifier is randomly generated.

This has no connection to the vehicle identification number (VIN) and is deleted when the multimedia system is reset (→ page 289).

The following driving status data is transmitted:

- Transmission position engaged
- Distinction between parked, standstill, rolling and driving
- Day/night mode of the instrument cluster

The transfer of this data is used to alter how content is displayed to correspond to the driving situation.

The following position data is transmitted:

- Coordinates
- Speed
- Compass direction
- Acceleration direction

This data is only transferred while the navigation system is active, in order to improve it (e.g. so it can continue functioning when in a tunnel).

Mercedes me connect

Information on Mercedes me connect

Mercedes me connect provides the following services:

- Accident and breakdown management (me button or automatic accident or breakdown detection)
- Concierge Service (when the service is activated), appointment requests or similar (me button)
- Mercedes-Benz emergency call system (SOS button)

Mercedes me connect accident and breakdown management, the Mercedes me connect Concierge Service and the Mercedes-Benz emergency call centre are available for you around the clock.

The me button and the emergency call system can be found on the vehicle's overhead control panel (→ page 346).

You can also call the Mercedes-Benz Customer Centre using the multimedia system (→ page 346).

Please note that Mercedes me connect is a Mercedes-Benz service. In emergencies, always call the national emergency services first using the standard national emergency service phone numbers. In emergencies, you can also use the Mercedes-Benz emergency call system (→ page 349).

Further information on Mercedes me connect, the provided service scope and operation: http://manuals.daimler.com/baix/cars/connectme/de_DE/index.html

Calling the Mercedes-Benz Customer Centre using the multimedia system

Requirements for using Mercedes me connect services in the vehicle:

- You have access to a GSM network.
- The contract partner's GSM network coverage is available in the respective region.
- The ignition must be switched on so that vehicle data can be transferred automatically.

Multimedia system:

→ ⌂ ▸▸ Telephone ▸▸ 👥

▶ Call Mercedes me connect.
After confirmation, the multimedia system sends the required vehicle data.

The data transfer is shown in the multimedia system display. Then, you can select a service and be connected to a specialist at the Mercedes-Benz Customer Centre.

Further information on Mercedes me connect, the provided service scope and operation are available at: http://manuals.daimler.com/baix/cars/connectme/en_GB/index.html

Making a call via the overhead control panel

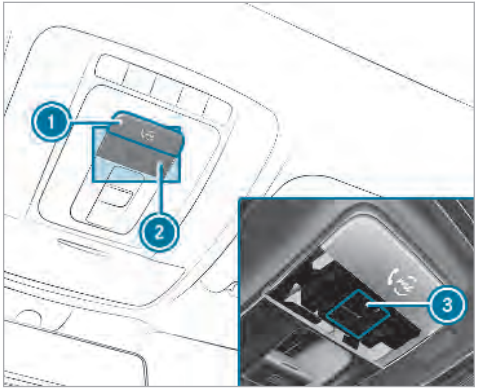

1. Service call button (me button)
2. SOS button cover
3. SOS button

▶ **To make a service call:** press me button 1.

- **To make an emergency call:** press SOS button cover ② briefly to open.
- Press and hold SOS button ③ for at least one second.

If a service call is active, an emergency call can still be triggered. This has priority over all other active calls.

Information about the service call using the me button

A call to the Mercedes-Benz Customer Centre has been initiated via the me button in the overhead control panel or the multimedia system.

In the event of a breakdown, you will get support:

- A qualified Mercedes-Benz technician carries out repairs on site and/or the vehicle will be towed to the nearest Mercedes-Benz service centre.

  You may be charged for these services.

You can find information on the following topics:

- Activation of Mercedes me connect
- Operating the vehicle
- Nearest Mercedes-Benz service centre
- Other products and services from Mercedes-Benz

Data is transmitted during the connection to the Mercedes-Benz Customer Centre (→ page 348).

Information on Mercedes me connect accident management

The Mercedes me connect accident management is an extension of the Mercedes-Benz emergency call system (→ page 349).

An emergency call is made to the Mercedes-Benz emergency call centre after an accident:

- A voice connection is made to a contact person at the Mercedes-Benz emergency call centre.
- If necessary, the contact person at the Mercedes-Benz emergency call centre forwards the call to Mercedes me connect accident management.
- If necessary, the vehicle will be towed to a Mercedes-Benz service centre.

If the vehicle detects a minor accident, a message appears in the multimedia system.

The message is confirmed in the multimedia system:

- A voice connection is made to a contact person at Mercedes me connect accident management.
- If necessary, the vehicle will be towed to a Mercedes-Benz service centre.

Mercedes me connect service message

If you have activated the maintenance management service, relevant vehicle data is transferred automatically to the Mercedes-Benz Customer Centre. You will then receive individual recommendations regarding the maintenance of your vehicle.

Regardless of whether you have consented to the maintenance management service, the multimedia system reminds you after a certain amount of time that a service is due. A prompt appears asking if you would like to make an appointment.

▶ **To arrange a service appointment:** select Call.
After your agreement the vehicle data is sent and a Mercedes-Benz Customer Centre employee deals with your appointment. The information is then sent to your desired service outlet.

This service outlet will then contact you within 24 hours.

ⓘ If you select Later after the service message appears, the message is hidden and reappears after a certain period of time.

Consenting to data transfer for Mercedes me connect

Requirements:

- There is an active service call via the multimedia system or the me button in the overhead control panel (→ page 346).

ⓘ In certain countries you must confirm the data transfer.

If the accident and breakdown service and Mercedes me connect Concierge Service are not activated on Mercedes me, the Do you want to transmit vehicle data and the vehicle's position to the Mercedes-Benz Customer Centre in order to improve the processing of your request? message appears.

▶ Select Yes.
Relevant identification data is transmitted automatically.

More information on Mercedes me: http://www.mercedes.me

Transferred data during a service call

When you make a service call via Mercedes me connect, various data will be transmitted.

Depending on which service is activated, the following data is transmitted when a call is made:

- Vehicle identification number
- Mercedes me customer identification number
- Reason for the initiation of the call
- Language set in the multimedia system
- Confirmation of the data protection prompt
- Current vehicle location
- Service and workshop code
- Selected data about the status of the vehicle

The following data is transmitted if no service is activated and the data protection prompt has been confirmed:

- Vehicle identification number
- Mercedes me customer identification number
- Reason for the initiation of the call
- Language set in the multimedia system
- Confirmation of the data protection prompt

The following data is transmitted if the data protection prompt has been rejected:

- Reason for initiating the call
- Rejection of the data protection prompt

Mercedes me and apps

Information about Mercedes me
When you log in with a user account to the Mercedes me portal, then services and offers from Mercedes-Benz will be available to you.

Availability is country-dependent.

For more information consult a Mercedes-Benz service centre or visit the Mercedes me portal: http://me.secure.mercedes-benz.com

Calling up the Mercedes me user account
Multimedia system:

→ ⌂ ▸▸ Mercedes me & Apps

Your vehicle is connected with a user account

▶ Select Mercedes me.
Information about the connected user account appears.

Your vehicle is not yet connected with a user account

▶ Select Mercedes me.

▶ The instructions for creating a user account and connecting the vehicle with this follow on the multimedia system display.

ⓘ If the Mercedes me app is available on a mobile phone, the vehicle connection can be accomplished using the QR code shown.

Calling up the Mercedes me services

Requirements:

- The vehicle is connected with the user account.

Multimedia system:

→ ⌂ ▸▸ Mercedes me & Apps

▶ Select Services.
Within the various categories you can see the Mercedes me services you have already purchased and also those still available to purchase.

To activate or deactivate the services, log in to your user account in the Mercedes me portal.

Deleting a connection between a user account and the vehicle
Multimedia system:

→ ⌂ ▸▸ Mercedes me & Apps ▸▸ Mercedes me

▶ Select Delete vehicle assignment.

▶ Enter the PIN of the connected user account.

Mercedes-Benz emergency call system

Information on the Mercedes-Benz emergency call system
The Mercedes-Benz emergency call system only functions in areas where mobile phone coverage is available from the relevant contract partner. Insufficient network coverage from the relevant contract partner may result in an emergency call not being transmitted.

The ignition must be switched on before an automatic emergency call can be made.

Overview of the Mercedes-Benz emergency call system
The Mercedes-Benz emergency call system can help to decisively reduce the time between an accident and the arrival of emergency services at the site of the accident. It helps locate an accident site in places that are difficult to access.

The emergency call can be made automatically (→ page 350) or manually . Only make emergency calls if you or others are in need of rescue. Do not make an emergency call in the event of a breakdown or a similar situation.

Notification in the multimedia system display:
SOS NOT READY: the ignition is not on or there is a malfunction with the emergency call system.

As soon as the emergency call system is available, the notification disappears.

During an active emergency call, SOS appears in the display.

You can find more information on the regional availability of the Mercedes-Benz emergency call system at: http://www.mercedes-benz.com/connect_ecall.

ⓘ If an emergency call is unavailable, a message to this effect also appears in the multifunction display of the instrument cluster.

Triggering an automatic emergency call

Requirements:
- The ignition is switched on.
- The starter battery is sufficiently charged.

If restraint systems such as airbags or seat belt tensioners have been activated after an accident, the Mercedes-Benz emergency call system may automatically initiate an emergency call.

The emergency call has been made:
- A voice connection is made to the Mercedes-Benz emergency call centre.
- A message with accident data is transmitted to the Mercedes-Benz emergency call centre.

  The Mercedes-Benz emergency call centre can transmit the vehicle position data to one of the public emergency services call centres.
- Under certain circumstances data is also transmitted in the voice channel to the Mercedes-Benz emergency call centre.

  This allows measures for rescue, recovery or towing to a Mercedes-Benz service centre to be initiated quickly.

If your vehicle is equipped with an SOS button in the overhead control panel, it flashes until the emergency call has been completed.

It is not possible to immediately end an automatic emergency call.

If the Mercedes-Benz emergency call system cannot connect to the Mercedes-Benz emergency call centre, the emergency call is automatically sent to the public emergency services call centre.

If no connection can be made to the public emergency services, a corresponding message appears in the display.

▶ Dial the emergency number 999 or **112** on your mobile phone.

If an emergency call has been initiated:
- Remain in the vehicle if the road and traffic conditions permit you to do so until a voice connection is established with the emergency call centre operator.
- On the basis of the call, the operator decides whether it is necessary to call rescue teams and/or the police to the accident site.
- If no vehicle occupant answers, an ambulance is sent to the vehicle immediately.

Triggering a manual emergency call

▶ If the vehicle has an SOS button in the overhead control panel: press and hold the button for at least one second.

The emergency call has been made:

- A voice connection is made to the Mercedes-Benz emergency call centre.
- If the road and traffic conditions permit, remain in the vehicle until a voice connection is established with the emergency call centre operator.
- On the basis of the call, the operator decides whether it is necessary to call rescue teams and/or the police to the accident site.
- A message with accident data is transmitted to the Mercedes-Benz emergency call centre.

  The Mercedes-Benz emergency call centre can transmit the vehicle position data to one of the public emergency services call centres.
- In certain situations data is also transmitted in the voice channel to the Mercedes-Benz emergency call centre.

  This allows measures for rescue, recovery or towing to a Mercedes-Benz Service Centre to be initiated quickly.

If the Mercedes-Benz emergency call system cannot connect to the Mercedes-Benz emergency call centre, the emergency call is automatically sent to the public emergency services call centre.

If no connection can be made to the public emergency services, a corresponding message appears in the display of the multimedia system.

▶ Dial the emergency number 999 or **112** on your mobile phone.

Transmitted data with the Mercedes-Benz emergency call system

In the event of an automatic or manual emergency call, as well as for a **112** emergency call, data is transmitted to the Mercedes-Benz emergency call centre or the public emergency services call centre.

The following data is transmitted:

- the vehicle's GPS position data
- the last GPS position data on the route (a few 100 metres before the incident)
- direction of travel
- vehicle identification number
- the vehicle drive type
- the estimated number of people in the vehicle
- whether Mercedes me connect is available or not
- whether the emergency call was initiated manually or automatically
- the time of the accident
- the language setting on the multimedia system

For accident clarification purposes, the following measures can be taken up to an hour after the emergency call has been initiated:

- the current vehicle position can be called up
- a voice connection to the vehicle occupants can be established

ⓘ For Russia: various functions, e.g. receiving traffic information, cannot be performed for up to two hours after sending an emergency call.

Self-diagnosis display of the emergency call system (Russia)

Your car verifies the operability of the emergency call system each time the ignition is ON. In case of system failure, you will be informed with text message on the instrument cluster and with red indicator SOS NOT READY on the multimedia display.

Please, make sure, that during 3-10 seconds after switching ignition ON the red indicator SOS NOT READY in the upper right corner of the multimedia display is switched OFF, this means the emergency call system passed diagnostics successfully. If necessary, switch ON the multimedia display, if it was switched OFF before.

Starting/ending ERA-GLONASS test mode (Russia)

Requirements:

- The starter battery has sufficient charge.
- the ignition is switched on.
- The vehicle has been stationary for at least one minute.

▶ **To start the test mode:** press and hold the button on the multifunction steering wheel for at least five seconds.
The test mode is started and automatically ends after the language test has been performed.

▶ **To end the test mode manually:** switch off the ignition.
The test mode is ended.

Online and Internet functions

Internet connection

Information on connecting to the Internet

⚠ **WARNING** Risk of distraction from information systems and communications equipment

If you operate information and communication equipment integrated in the vehicle when driving, you will be distracted from the traffic situation. This could also cause you to lose control of the vehicle.

▶ Only operate this equipment when the traffic situation permits.

▶ If you cannot be sure of this, stop the vehicle whilst paying attention to road and traffic conditions and operate the equipment with the vehicle stationary.

You must observe the legal requirements for the country in which you are currently driving when operating the multimedia system.
To use Mercedes-Benz Apps and access the Internet, Mercedes me connect must be activated and operational. Furthermore, Mercedes me connect must be activated for Internet access.

Depending on the vehicle's equipment, you can establish an Internet connection in the following ways:

- **Vehicles with a communication module:** Internet use including Mercedes me connect services and data roaming (→ page 353).

- **Vehicles without a communication module:**
  - via Bluetooth® with a data-enabled mobile phone (→ page 353)
  - via Wi-Fi with a data-enabled mobile phone (→ page 353)
  - via business telephony

The Internet functions can only be used to a limited degree whilst driving.

Internet connection via communication module

On vehicles with a built-in communication module, the Internet connection is established via an integrated SIM card.

If the data volume limit is reached, the availability of Mercedes me connect services is limited. The data volume must be purchased on Mercedes me connect.

Setting up an Internet connection via Wi-Fi

Requirements:

- the Wi-Fi function is activated on the multimedia system (→ page 284).
- the Wi-Fi function is activated on the mobile phone (see the manufacturer's operating instructions).
- Internet access via Wi-Fi is activated (see the manufacturer's operating instructions).

The Internet connection via Wi-Fi is restricted or does not function if:

- the mobile phone is switched off
- mobile data use is deactivated on the mobile phone
- the Wi-Fi function is deactivated on the multimedia system
- the Wi-Fi function is deactivated on the mobile phone
- Internet access via Wi-Fi is deactivated on the mobile phone

Multimedia system:

→ ⌂ ▸▸ Settings ▸▸ System ▸▸ Wi-Fi & Bluetooth ▸▸ Internet settings ▸▸ Connect via Wi-Fi

▶ Select the network.

▶ Log in to the Wi-Fi network (→ page 284).

Setting up an Internet connection via Bluetooth®

Requirements:

- The mobile phone support the Bluetooth® profile PAN (**P**ersonal **A**rea **N**etwork)
- The mobile phone is connected to the multimedia system via Bluetooth® (→ page 330).

The Internet connection via Bluetooth® is restricted or does not function if:

- the mobile phone is switched off
- the mobile phone is connected a an additional mobile phone
- the mobile phone network coverage is insufficient
- mobile data use is deactivated on the mobile phone
- the Bluetooth® function on the multimedia system is switched off and the mobile phone is to be connected via Bluetooth®

- the Bluetooth® function is switched off on the mobile phone and the mobile phone is to be connected via Bluetooth®
- neither the mobile phone network nor the mobile phone allow simultaneous use of a telephone and an Internet connection
- the mobile phone has not been enabled for Internet access via Bluetooth®

If a mobile phone is connected to the multimedia system for the first time via Bluetooth®, you will be assisted through the process of setting up an Internet connection.

The Internet connection can also be configured manually.

Further information can be obtained at http://www.mercedes-benz.com/connect or from a Mercedes-Benz service centre.

Multimedia system:

→ [⌂] ▸▸ Settings ▸▸ System ▸▸ Wi-Fi & Bluetooth ▸▸ Internet settings ▸▸ Connect via Bluetooth

▶ Select the mobile phone.
The Internet connection is established.

Establishing an automatic Internet connection

Multimedia system:

→ [⌂] ▸▸ Settings ▸▸ System ▸▸ Wi-Fi & Bluetooth ▸▸ Internet settings

▶ Highlight the mobile phone.

▶ Select [>].

▶ Activate [toggle] Permanent Internet connection.

Cancelling Internet access permission for a mobile phone

Multimedia system:

→ [⌂] ▸▸ Settings ▸▸ System ▸▸ Wi-Fi & Bluetooth ▸▸ Internet settings

▶ Select [>] in the line of the mobile phone.

▶ Select Delete configuration.

▶ Select Yes.

Displaying mobile phone details

Multimedia system:

→ [⌂] ▸▸ Settings ▸▸ System ▸▸ Wi-Fi & Bluetooth ▸▸ Internet settings

▶ Select [>] in the line of the mobile phone.

▶ Select Details.

Establishing an Internet connection

Multimedia system:

→ [⌂] ▸▸ Mercedes me & Apps

▶ For example, select Free Browser.

ⓘ The multimedia system usually establishes the Internet connection automatically. If the multimedia system is not connected to the Internet, the Internet connection is established when an Internet application is used.

Setting automatic disconnection of the Internet connection

Multimedia system:

→ [⌂] ▸▸ Settings ▸▸ System ▸▸ Wi-Fi & Bluetooth ▸▸ Internet settings

▶ Select [>] in the line of the mobile phone.

▶ Select Disconnect when inactive.

The following options are available:

- 5 minutes
- 10 minutes
- 20 minutes
- Unlimited

▶ Select an option.

Connection status

Connection status overview

① Display of existing connection and reception field strength of the communication module or of the connected Bluetooth® device

Displaying the connection status

Multimedia system:

→ [⌂] ▸▸ Settings ▸▸ System ▸▸ Wi-Fi & Bluetooth

▶ Select Internet status.

ⓘ When connected via Wi-Fi or a Bluetooth® device, the approximate data volume transmitted is displayed. The exact values can be requested from your mobile phone network provider.

Web browser

Calling up a web page

⚠ **WARNING** Risk of distraction from information systems and communications equipment

If you operate information and communication equipment integrated in the vehicle when driving, you will be distracted from the traffic situation. This could also cause you to lose control of the vehicle.

- Only operate this equipment when the traffic situation permits.
- If you cannot be sure of this, stop the vehicle whilst paying attention to road and traffic conditions and operate the equipment with the vehicle stationary.

You must observe the legal requirements for the country in which you are currently driving when operating the multimedia system.

Multimedia system:

→ [⌂] ▸▸ Mercedes me & Apps ▸▸ [🌐] Browser

Calling up a new web page

- Select [URL].
- Enter a web address.
- Select [ok] .

ⓘ The function is country-dependent.

ⓘ Websites cannot be shown while the vehicle is in motion.

Calling up a website from the browser history

- To call up the previous or next page from the history: select ← or →.

Web browser overview

1. URL entry
2. Bookmarks
3. Web page, back
4. Web page, forwards
5. To refresh/stop
6. Options

Calling up web browser options
Multimedia system:
→ ⌂ ▸▸ Mercedes me & Apps ▸▸ Browser ▸▸ ⚙
The following functions are available:
- Bookmarks
- Options with the settings:
  - Browser settings
  - Delete browser data

▶ Select an option.
▶ Change the settings.

Calling up the web browser settings
Multimedia system:
→ ⌂ ▸▸ Mercedes me & Apps ▸▸ Browser ▸▸ ⚙ ▸▸ Browser settings
The following functions are available:
- Block popups
- Enable Javascript
- Enable cookies

▶ Switch a function on ☑ or off ☐.

Deleting Internet history
Multimedia system:
→ ⌂ ▸▸ Mercedes me & Apps ▸▸ Browser ▸▸ ⚙ ▸▸ Delete browser data
The following options are available:
- All
- Cache
- Cookies
- Entered URLs

▶ Select an option.
▶ Select Yes.

Managing bookmarks
Multimedia system:
→ ⌂ ▸▸ Mercedes me & Apps ▸▸ Browser
▶ Select ★.

Selecting a bookmark
▶ Select an entry.

Creating a bookmark
▶ Select Aktuelle Seite zu Lesezeichen hinzufügen (Add current page to the bookmarks).
▶ Enter a name.
▶ Select Bestätigen (Confirm).

Editing a bookmark
▶ Select ⊙ after a bookmark.
▶ Select Edit.
▶ Enter a name.
▶ Select Bestätigen (Confirm).

Deleting a bookmark
▶ Select ⊙ after a bookmark.
▶ Select Delete.
▶ Select Yes.

Closing the browser

Multimedia system:

→ [⌂] ▸▸ Mercedes me & Apps ▸▸ [🌐] Browser

▶ Select [⌂].

Internet radio

Calling up Internet radio

Requirements:

- There is an account on http://www.mercedes.me.
- The Internet radio service is activated.
- The data volume is available.

  Depending on the country, data volume may need to be purchased.
- A fast Internet connection for data transmission free of interference.

ⓘ The functions and services are country-dependent. For more information, consult a Mercedes-Benz service centre.

Multimedia system:

→ [⌂] ▸▸ Radio

▶ Select TuneIn Radio.
The Internet radio menu appears. The last station set starts playing.

ⓘ The connection quality depends on the local mobile phone reception.

Internet radio overview

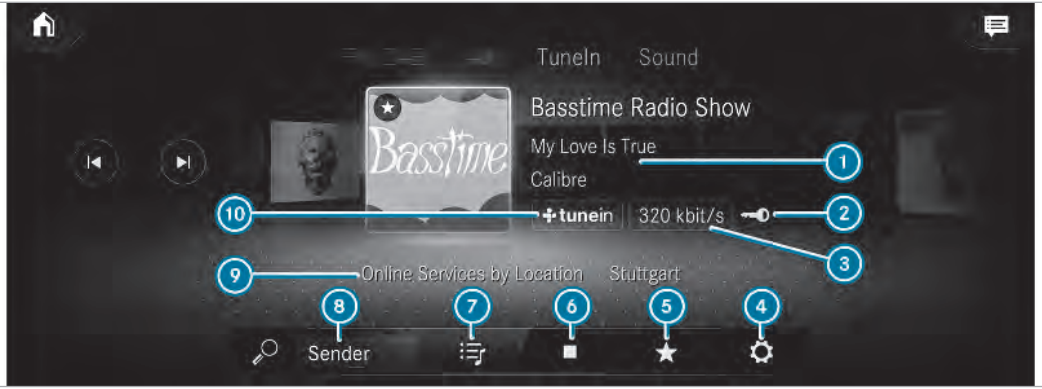

1. Additional information on the current station
2. Display (if connected to private user account)
3. Data transfer rate
4. Options
5. Favourites
6. To start/end
7. To browse
8. Search
9. Selected category
10. Internet radio provider

Selecting and connecting to Internet radio stations

Multimedia system:

→ [⌂] ▸▸ Radio ▸▸ TuneIn radio

▶ Select [ ].

▶ Select a category.

▶ Select a station.
The connection is established automatically.

or

▶ Select the search field.

▶ Enter a station name using the entry field.

ⓘ A relatively large volume of data can be transmitted when using Internet radio.

Saving/deleting Internet radio stations as favourites

Multimedia system:

→ [⌂] ▸▸ Radio ▸▸ TuneIn radio

▶ Select a station.

▶ Select [★].
The list of saved favourite stations appears.

▶ Select Add to favourites.

or

▶ Create an account for the online provider (TuneIn radio) and then log in on the multimedia system.
Your favourites are imported to the multimedia system.

Deleting favourites

▶ Select a station.

▶ Select [★].

▶ Select Delete favourite.

Setting Internet radio options

Multimedia system:

→ [⌂] ▸▸ Radio ▸▸ TuneIn radio ▸▸ [⚙]

The following options are available:

- Select stream: select the stream quality.
- Login to TuneIn account: log in to your TuneIn user account.
- Log out of account: log out of your TuneIn user account.

▶ Select an option.

Showing the station list for the last category selected

Multimedia system:

→ [⌂] ▸▸ Radio ▸▸ TuneIn radio

▶ Press the cover of the current station.
Depending on how the station was selected, a station list is shown.

Media

Information about media mode

Information about supported formats and data storage media

⚠ **WARNING** Risk of distraction when handling data storage media

If you handle a data storage medium while driving, your attention is diverted from the traffic conditions. This could also cause you to lose control of the vehicle.

▶ Only handle a data storage medium when the vehicle is stationary.

The multimedia system supports the following formats and data media:

Permissible file systems	FAT32, exFaT, NTFS
Permissible data carriers	USB devices, iPod®/iPhone®, MTP devices, Bluetooth® audio equipment
Supported formats:	**Audio:** MP3, WMA, AAC, WAV, FLAC, ALAC **Video:** MPEG, AVI, DivX, MKV, MP4, M4V, WMV

- The multimedia system supports a total of up to 50,000 files.
- Data storage media up to 2 TB are supported (32-bit address space).

ⓘ Observe the following notes:

- Due to the large variety of available music and video files regarding encoders, sampling rates and data transfer rates, playback cannot always be guaranteed.
- Due to the wide range of USB devices available on the market, playback cannot be guaranteed for all USB devices.
- Videos up to FullHD (1920x1080) are supported.
- Copy-protected music and video files or DRM (Digital Rights Management) encrypted files cannot be played back.
- MP3 players must support Media Transfer Protocol (MTP).

Information on copyright protection and trademarks

Audio files that you create or reproduce yourself for playback are generally subject to copyright protection. In many countries, reproductions, even for private use, are not permitted without the prior consent of the copyright holder. Make sure that you know about the applicable copyright regulations and that you comply with these.

Manufactured under licence from Dolby Laboratories. Dolby, Dolby Audio and the double-D symbol are trademarks of Dolby Laboratories.

Gracenote, the Gracenote logo and logotype, "Powered by Gracenote", MusicID and Playlist Plus are either registered trademarks or trademarks of Gracenote, Inc. in the United States and/or other countries.

For DTS Patents, see http://patents.dts.com. Manufactured under licence from DTS Licensing Limited. DTS, DTS-HD, the Symbol, & DTS and the Symbol together are registered trademarks of DTS, Inc.© DTS, Inc. All Rights Reserved.

Overview of the media menu

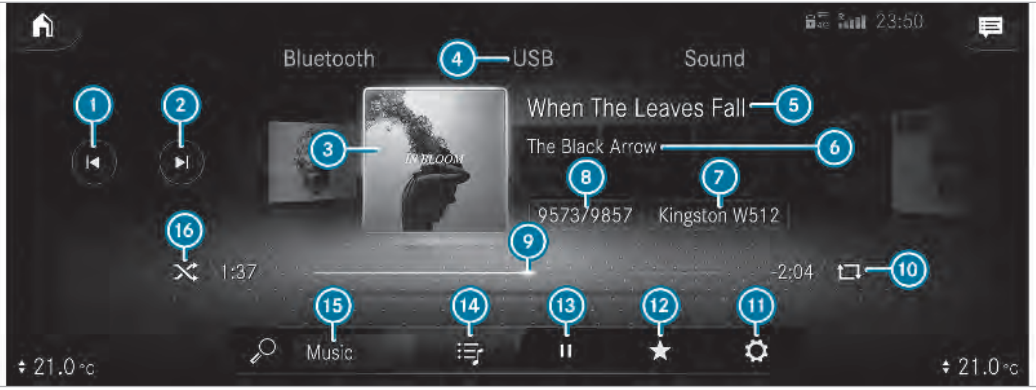

1. Previous track or fast rewind
2. Next track or fast forward
3. Album cover
4. Active media source
5. Current track/track in the playback list
6. Active data storage medium
7. Track title
8. Artist
9. Repeat
10. Options (video mode only)
11. Additional options
12. Controls playback
13. Timeline
14. Categories
15. Music search
16. Random playback

Connecting the data storage medium to the multimedia system

Connecting USB devices

NOTE Damage caused by high temperatures

High temperatures can damage USB devices.

▶ Remove the USB device after use and take it out of the vehicle.

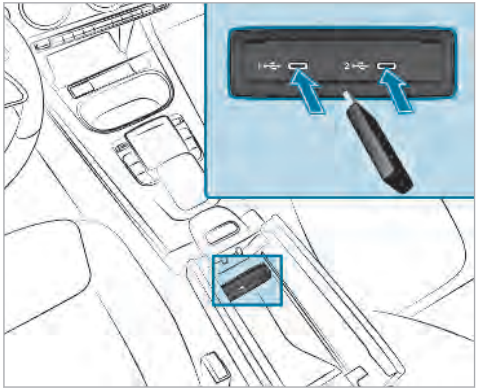

The multimedia connection unit is found in the stowage compartment under the armrest and has two USB ports. Depending on the vehicle's equipment, additional USB ports can be found in the stowage compartment of the centre console or rear folding compartment.

▶ Connect the USB device to the USB port.

Searching for and authorising Bluetooth® audio equipment

Requirements:

- Bluetooth® is activated on the multimedia system and audio equipment.
- The audio equipment supports the Bluetooth® audio profiles A2DP and AVRCP.
- The audio equipment is "visible" for other devices.

Multimedia system:

▶ ⌂ ▸▸ Media ▸▸ Bluetooth ▸▸ ᛒ

Authorising new Bluetooth® audio equipment

▶ Select Connect new device.
Detected equipment is displayed in the device list.

▶ Select an audio device.
Authorisation starts. A code is displayed on the multimedia system and on the mobile phone.

▶ If the codes are identical, confirm on the audio equipment.

▶ Select Only as Bluetooth audio device.
The Bluetooth® audio equipment is connected with the multimedia system.

Connecting Bluetooth® audio equipment that has already been authorised

▶ Select a Bluetooth® audio device from the list.
Establishing a connection.

Starting media playback

A data storage medium is connected to the multimedia system.

Multimedia system:

→ [⌂] ▸▸ Media

▶ Select USB or Bluetooth as the media source.

Controlling media playback

Multimedia system:

→ [⌂] ▸▸ Media

▶ **To pause playback:** select [❚❚].

▶ **To continue playback:** select ▶.

▶ **To repeat a track:** select [⟲].
For the repeat function there are the following settings:

- **Select once:** the active playlist is repeated.
- **Select twice:** the current track is repeated.
- **Select three times:** the repeat function is deactivated.

▶ **To play back tracks in random order:** select [⤮].

▶ **To wind a track forwards or backwards:** tap on the desired point on the timeline.

▶ **To select the next track:** select ►|.

▶ **To select the previous track:** select |◄.

▶ **To scroll through tracks quickly:** press and hold |◄ or ►|.

▶ **To show the current track list:** select the track image shown.

Additional options

Multimedia system:

→ [⌂] ▸▸ Media

Calling up additional options

▶ Select [☆].
The additional options are shown.

The following options are available:

- Play similar tracks
  Select during playback of a track in order to create a playlist with similar tracks
- Surprise mix
  A playlist with randomly selected tracks is created.
- Add to favourite songs
  The current track is added to the favourite songs.
- Delete from favourite songs

The current track is removed from the favourite songs.

▶ Select an option.

Media search

Information about the search function in categories

Under My Music you can search through all available media files. There are several categories available for selection. The categories shown depend on the connected device and data format.

Available categories with Bluetooth audio:

- Current tracklist

  The folders and categories of the connected device are shown.

Available categories with audio files:

- Current tracklist
- Playlists
- Folder
- Albums
- Artists
- Tracks
- Favourite songs
- Frequently played
- Most recently added
- Mood (→ page 368).
- Music genres
- Year
- Composers
- Select by cover
- Podcasts (Apple® devices)
- Audiobooks (Apple® devices)

Available categories with video files:

- Folder
- Videos

ⓘ The categories are available as soon as the entire media content has been read in and analysed.

Starting a search in categories

Multimedia system:

→ ⌂ ▸▸ Media ▸▸ My Music

▶ Select a category.
The media files are shown corresponding to the selected category, e.g. all albums will be shown for the Albums category.

Sorting results shown or playing back all media found

▶ Select •••.

▶ **To play back all results found in the category:** select Play all.
If, for example, the album category is active, all albums found by the desired artist will be played back.

▶ **To sort results alphabetically:** select Sort from A-Z.

▶ **To sort results in reverse alphabetical order:** select Sort from Z-A.

ⓘ The available options depend on the selected category and the connected device.

Using the keyword search

Multimedia system:

→ [⌂] ▸▸ Media ▸▸ My Music

In the categories under [♪] My Music you can use the keyword search with free text input to look for content.

- ▶ Select a category.
- ▶ Select Search.
  A keyboard for character entry appears.
- ▶ Enter the term searched for.

ⓘ The search begins with the first character entered. The more characters entered the more concrete the search results become.

- ▶ Select the desired entry from the result list. If the selected result is an album, song or a playback list then playback is started. If the selected result is a new category then this is opened in the search.

Searching for a track according to mood

Multimedia system:

→ [⌂] ▸▸ Media ▸▸ My Music

Using the My Music search, you can find music tracks suitable for a mood.

- ▶ Select Mood.
  A grid with the following moods appears:
  - Positive
  - Calm
  - Dark
  - Energetic
- ▶ Pull the controller to the desired position. The system searches for tracks that are suitable for the mood entered.

Making video settings

Multimedia system:

→ [⌂] ▸▸ Media ▸▸ [⚙]

- ▶ Select Video settings.
- ▶ Select an aspect ratio.

Setting full screen

- ▶ Select [◢].

Radio

Switching on the radio

Multimedia system:

→ [⌂] ▸▸ Radio

- ▶ Alternatively: press the [RADIO] [MEDIA] button. The radio display appears. You will hear the last station played on the last frequency band selected.

Radio overview

1. Active frequency band
2. Station name or set frequency
3. Artist, title, album and radio text
4. Options
5. Full screen/DAB slideshow
6. Mute function
7. Station list
8. Search

Setting the frequency band

Multimedia system:

→ [⌂] ▸▸ Radio

▶ Select a frequency band.

Selecting a radio station

Multimedia system:

→ [⌂] ▸▸ Radio

▶ Swipe to the left or right on the control element.

Calling up the radio station list

Multimedia system:

→ [⌂] ▸▸ Radio

▶ Select [☰].
The station list appears.

▶ Select a station.

Sorting station lists according to categories (only for FM/DAB)

▶ Select Category.

▶ Select a category.

Searching for radio stations using station names or direct frequency entry

Multimedia system:

→ [⌂] ▸▸ Radio

▶ Select [☰].

▶ Select [🔍].

▶ Enter a station name or frequency.

▶ Select a station.

Storing radio stations

Multimedia system:

→ [⌂] ▸▸ Radio

▶ Select a radio station.

Memory slots are available in station presets

▶ Select [+].

Replacing an entry in the station presets

▶ Press and hold on an entry in the station presets.

▶ Select Yes.

Editing station presets

Multimedia system:

→ [⌂] Radio

Moving stations:

▶ Press and hold a stored station.

▶ Select Move.

▶ Move the station to the new position.

Deleting stations:

▶ Press and hold a station.

▶ Select Delete.

Replacing a station:

▶ Press and hold a station.

▶ Select Replace radio station.

Calling up a slide show (FM/DAB radio mode)

Multimedia system:

→ [⌂] ▸▸ Radio

The slide show displays additional information provided by the station as an image. This can include logos, album covers, music tracks, programmes, news or service information, for example.

▶ Select [⊡].

Activating or deactivating the frequency fix function

Multimedia system:

→ [⌂] ▸▸ Radio ▸▸ [⚙]

▶ Select Frequency fix to switch on or off.
If the function is activated, the set frequency is kept even if the reception is poor.

Activating/deactivating traffic announcements

Multimedia system:

→ [⌂] ▸▸ Radio ▸▸ [⚙]

▶ Switch Traffic announcements on or off.

Setting the traffic information service volume increase

Multimedia system:

→ [⌂] ▸▸ Radio ▸▸ [⚙] ▸▸ Sound

▶ Select Other sound settings.

▶ Select Navigation and traffic announcements.

▶ Select TRAFFIC ANNOUNCEMENTS VOLUME INCREASE.

▶ Set a value.

▶ To adopt the value: select [<].

Editing the voice tag function

Multimedia system:

→ [⌂] ▸▸ Radio ▸▸ [⚙]

▶ Select Voice tag.

▶ Select Hinzufügen (Add), Löschen (Delete) or Anhören (Listen to).

Displaying radio text

Multimedia system:

→ [⌂] ▸▸ Radio ▸▸ [⚙]

▶ Switch Display radio text information on or off.

Sound

Tone settings

Information about the sound system

The sound system has a total output of 100 watts and is equipped with 6 speakers. It is available for all functions in the radio and media modes.

Calling up the sound menu
Multimedia system:
→ [⌂] ▸▸ Media ▸▸ Sound
The following functions are available:
- Equaliser
- Balance and Fader
- Auto. volume adjustment
- Other sound settings

▶ Select a sound menu.

Adjusting treble, mid-range and bass settings
Multimedia system:
→ [⌂] ▸▸ Media ▸▸ Sound
▶ Set TREBLE, MID or BASS.

Activating/deactivating automatic volume adjustment
Multimedia system:
→ [⌂] ▸▸ Media ▸▸ Sound ▸▸ [•••] ▸▸ Auto. volume adjustment
Automatic volume adjustment compensates for differing volumes when changing between audio sources.
▶ Switch Auto. volume adjustment on or off.

Adjusting the balance/fader
Multimedia system:
→ [⌂] ▸▸ Media ▸▸ Sound
▶ Adjust the balance and fader.

Burmester® surround sound system

Information about the Burmester® surround sound system
The Burmester® surround sound system has a total output of 590 watts and is equipped with 12 speakers. It is available for all functions in the radio and media modes.

Calling up the sound menu in the Burmester® surround sound system
Multimedia system:
→ [⌂] ▸▸ Media ▸▸ Burmester
The following functions are available:
- Soundsets
- Equaliser
- Sound focus
- Automatic volume adjustment

▶ Select a function.

Adjusting the treble, mid and bass settings on the Burmester® surround sound system
Multimedia system:
→ [⌂] ▸▸ Media ▸▸ Burmester
▶ Set TREBLE, MID or BASS.

Activating/deactivating volume adjustment in the Burmester® surround sound system
Multimedia system:
→ [⌂] ▸▸ Media ▸▸ Burmester ▸▸ [•••] ▸▸ Auto. volume adjustment

Automatic volume adjustment compensates for differing volumes when changing between audio sources.

▶ Activate or deactivate the function.

Adjusting the balance/fader in the Burmester® surround sound system
Multimedia system:
→ [⌂] ▸▸ Media ▸▸ Burmester

▶ Adjust the balance and fader.

Switching surround sound on/off in the Burmester® surround sound system
Multimedia system:
→ [⌂] ▸▸ Media ▸▸ Burmester ▸▸ [((5.1))] Surround sound

▶ Select Pure or Surround.

Adjusting the sound focus in the Burmester® surround sound system
Multimedia system:
→ [⌂] ▸▸ Media ▸▸ Burmester ▸▸ SF

▶ Select a position for the sound focus or All seats.

Advanced sound system

Information about the Advanced sound system
The Advanced sound system has a total output of 225watts and is equipped with 10 speakers. It is available for all functions in the radio and media modes.

Calling up the sound menu in the Advanced sound system
Multimedia system:
→ [⌂] ▸▸ Media ▸▸ Sound

The following functions are available:

- Equaliser
- Balance and Fader
- Auto. volume adjustment
- Other sound settings

▶ Select a function.

Adjusting treble, mid-range and bass settings in the Advanced sound system
Multimedia system:
→ [⌂] ▸▸ Media ▸▸ Sound ▸▸ Equaliser

▶ Set TREBLE, MID or BASS.

Switching volume adjustment in the Advanced sound system on/off
Multimedia system:
→ [⌂] ▸▸ Media ▸▸ Sound ▸▸ [•••] ▸▸ Auto. volume adjustment

Automatic volume adjustment compensates for differing volumes when changing between audio sources.

▶ Switch Auto. volume adjustment on or off.

Setting the balance/fader in the Advanced sound system
Multimedia system:
→ [⌂] ▸▸ Media ▸▸ Sound

▶ Adjust the balance and fader.

ASSYST PLUS service interval display

Function of the ASSYST PLUS service interval display

The ASSYST PLUS service interval display in the instrument display provides information on the remaining time or distance before the next service due date.

You can hide this service message using the back button on the left-hand side of the steering wheel.

You can obtain further information concerning the servicing of your vehicle from a qualified specialist workshop, e.g. a Mercedes-Benz Service Centre.

Displaying the service due date

On-board computer:

Service ▸▸ ASSYST PLUS

The next service due date is displayed.

▶ **To exit the display:** press the back button on the left-hand side of the steering wheel.

Be sure to observe the following related topic:

- Operating the on-board computer (→ page 229).

Carrying out maintenance work at regular intervals

! **NOTE** Premature wear through failure to observe service due dates

Service work which is not carried out at the right time or incompletely can lead to increased wear and damage to the vehicle.

▶ Always observe the prescribed service intervals.

▶ Always have the prescribed service work carried out at a qualified specialist workshop.

Special service requirements

The prescribed service interval is based on normal operation of the vehicle. Maintenance work will need to be performed more often if the vehicle is operated under arduous conditions or increased loads.

Examples of arduous operating conditions:

- regular city driving with frequent intermediate stops
- mainly short-distance driving
- frequent operation in mountainous terrain or on poor road surfaces
- when the engine is often left idling for long periods
- operation in particularly dusty conditions and/or if air-recirculation mode is frequently used

In these or similar operating conditions, have the interior air filter, engine air cleaner, engine oil and oil filter etc. changed more frequently. The tyres must be checked more frequently if the vehicle is operated under increased loads. Further information can be obtained at a qualified specialist workshop.

Battery disconnection periods

The ASSYST PLUS service interval display can only calculate the service due date when the battery is connected.

▶ Note down the service due date displayed on the instrument display before disconnecting the battery (→ page 374).

Engine compartment

Active bonnet (pedestrian protection)

Operation of the active bonnet (pedestrian protection)

In certain accident situations, the risk of injury to pedestrians can be reduced by the actuation of the active bonnet. The rear area of the engine bonnet is raised by approximately 70 mm.

For the drive to the workshop, reset the triggered active bonnet yourself. After the active bonnet has been triggered, pedestrian protection may be limited.

A qualified specialist workshop must re-instate the full functionality of the active bonnet.

The active bonnet is not available in all countries.

Resetting the active bonnet

⚠ **WARNING** Danger of burns from hot component parts in the engine compartment

Certain component parts in the engine compartment may be very hot, e.g. the engine, the radiator and parts of the exhaust system.

▶ Let the engine cool down and only touch the component parts described below:

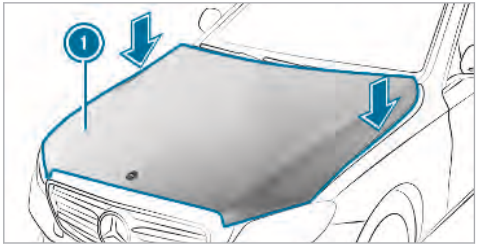

▶ With your hand flat, push down active bonnet ① in the area around the hinges on both sides (arrows).
In doing so, the actuator is depressurised and you may hear a hissing sound.

The engine bonnet must engage in position.

▶ If the active bonnet can be raised slightly at the rear in the area of the hinges, repeat the step until it engages correctly.

Opening/closing the bonnet

WARNING Risk of accident due to driving with the engine bonnet unlocked

An unlocked engine bonnet may open up when the vehicle is in motion and block your view.

- Never unlock the engine bonnet when driving.
- Before every trip, ensure that the engine bonnet is locked.

WARNING Risk of accident and injury when opening and closing the engine bonnet

When opening or closing the engine bonnet, it may suddenly drop into the end position.

There is a risk of injury for anyone in the engine bonnet's range of movement.

- Only open or close the engine bonnet when there are no persons in the engine bonnet's range of movement.

WARNING Danger of burns when opening the bonnet

If you open the engine bonnet when the engine has overheated or during a fire in the engine compartment, you could come into contact with hot gases or other escaping operating fluids.

- Before opening the bonnet, allow the engine to cool down.
- In the event of a fire in the engine compartment, keep the engine bonnet closed and call the fire service.

WARNING Risk of injury due to moving parts

Certain components in the engine compartment may continue to move or suddenly move again even after the ignition has been switched off, e.g. the cooler fan.

Make sure of the following before performing tasks in the engine compartment:

- Switch the ignition off.
- Never touch the danger zone surrounding moving component parts, e.g. the rotation area of the fan.
- Remove jewellery and watches.
- Keep items of clothing and hair away from moving parts.

WARNING Risk of injury from touching component parts under voltage

The ignition system and the fuel injection system work under high voltage. If you touch component parts which are under voltage, you could receive an electric shock.

- Never touch components of the ignition system or the fuel injection system when the ignition is switched on.

WARNING Danger of burns from hot component parts in the engine compartment

Certain component parts in the engine compartment may be very hot, e.g. the engine,

the radiator and parts of the exhaust system.

▶ Let the engine cool down and only touch the component parts described below:

⚠ **WARNING** Risk of injury from using the windscreen wipers while the engine bonnet is open

When the engine bonnet is open, and the windscreen wipers are set in motion, you can be trapped by the wiper linkage.

▶ Always switch off the windscreen wipers and ignition before opening the engine bonnet.

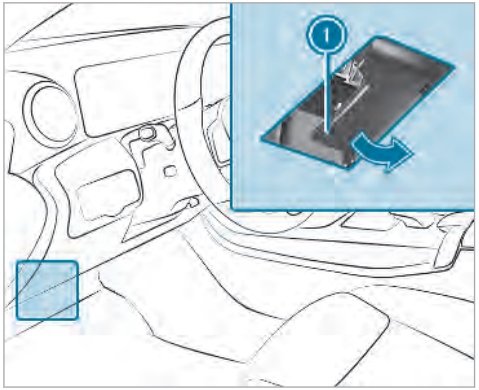

▶ **To open:** pull lever ① to release the engine bonnet.

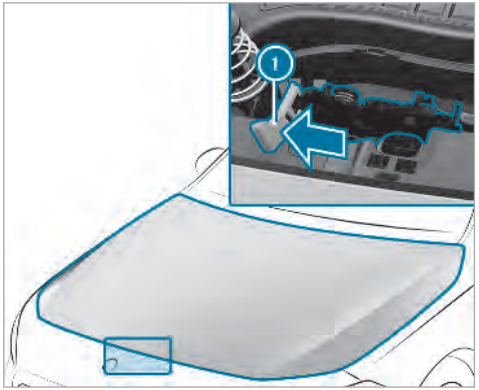

▶ Push the yellow handle ① of the bonnet catch to the left as far as it will go and lift the bonnet until it is automatically raised by the pneumatic strut.

▶ **To close:** lower the bonnet and let it fall from a height of approximately 20 cm.

▶ If the bonnet can still be lifted slightly, open the bonnet again and close it with a little force until it engages correctly.

Engine oil

Checking the engine oil level with an on-board computer

The engine oil level is determined during driving. The oil level display is only available after a driving time of up to 30 minutes and if the ignition is switched on, depending on the driving profile.

It is not possible to correctly measure the oil level if:

- the vehicle is not level during the measuring process.
- the bonnet was previously opened.

The engine must be restarted and the engine oil level will be determined again when driving.

On-board computer:

Service ▸▸ Engine oil level:

You will see one of the following messages in the multifunction display:

▶ Engine oil level Measuring now: measurement of the oil level is not yet possible. Repeat the request after a maximum of 30 minutes' driving.

▶ Engine oil level OK and the bar display for indicating the oil level in the multifunction display is green and is between "min" and "max": the oil level is correct.

▶ Engine oil level Add 1,0 l and the bar display for indicating the oil level in the multifunction display is orange and is below "min": top up with 1 l of engine oil.

▶ Reduce engine oil level and the bar display for indicating the oil level in the multifunction display is orange and is above "max": drain off the excess engine oil. Consult a qualified specialist workshop.

▶ For engine oil level turn on ignition: switch on the ignition to check the engine oil level.

▶ Engine oil level System inoperative: sensor faulty or not inserted. Consult a qualified specialist workshop.

▶ Engine oil level System currently unavail.: close the bonnet.

Topping up engine oil

⚠ **WARNING** Danger of burns from hot component parts in the engine compartment

Certain component parts in the engine compartment may be very hot, e.g. the engine, the radiator and parts of the exhaust system.

▶ Let the engine cool down and only touch the component parts described below:

⚠ **WARNING** Risk of fire and injury from engine oil

If engine oil comes into contact with hot component parts in the engine compartment, it may ignite.

▶ Make sure that no engine oil is spilled next to the filler opening.

▶ Allow the engine to cool off and thoroughly clean the engine oil from component parts before starting the vehicle.

NOTE Engine damage caused by an incorrect oil filter, incorrect oil or additives

- Do not use engine oils or oil filters which do not correspond to the specifications explicitly prescribed for the service intervals.
- Do not alter the engine oil or oil filter in order to achieve longer change intervals than prescribed.
- Do not use additives.
- Follow the instructions in the service interval display regarding the oil change.

NOTE Damage caused by topping up too much engine oil

Topping up too much engine oil can cause damage to the engine or the catalytic converter.

- Have excess engine oil removed at a qualified specialist workshop.

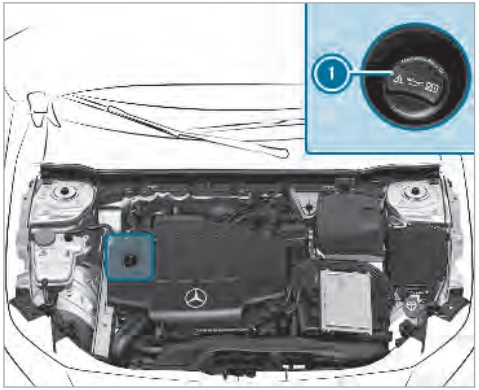

- Turn cap (1) anti-clockwise and remove it.
- Top up the engine oil.
- Replace cap (1) and turn it clockwise as far as it will go.
- Check the oil level again Checking the engine oil level with an on-board computer(→ page 378).

Checking the coolant level

WARNING Danger of burns from hot component parts in the engine compartment

Certain component parts in the engine compartment may be very hot, e.g. the engine, the radiator and parts of the exhaust system.

- Let the engine cool down and only touch the component parts described below:

WARNING Risk of scalding from hot coolant

The engine cooling system is pressurised, particularly when the engine is warm. If you open the cap, you could be scalded by hot coolant spraying out.

- Let the engine cool down before opening the cap.
- When opening the cap, wear gloves and safety glasses.

▶ Open the cap slowly to release pressure.

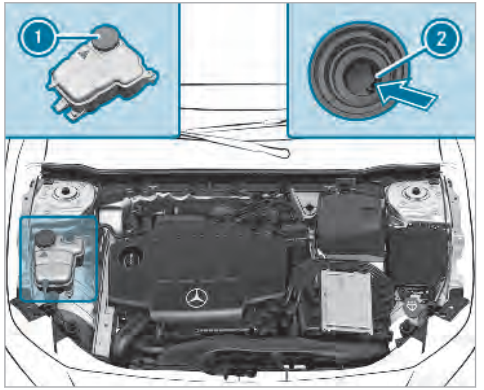

▶ Park the vehicle on a level surface.

▶ Check the coolant temperature display in the instrument cluster.
The coolant temperature must be below 70 °C.

▶ Slowly turn cap ① anti-clockwise to relieve overpressure.

▶ Continue turning cap ① anti-clockwise and remove it.

The coolant level is correct:

- if the engine is cold, up to marker bar ②.
- if the engine is warm, up to 1.5 cm over marker bar ②.

▶ If necessary, top up with coolant that has been approved by Mercedes-Benz.

- Further information on coolant (→ page 438)

Topping up the windscreen washer system

⚠ **WARNING** Danger of burns from hot component parts in the engine compartment

Certain component parts in the engine compartment may be very hot, e.g. the engine, the radiator and parts of the exhaust system.

▶ Let the engine cool down and only touch the component parts described below:

⚠ **WARNING** Danger of burns when opening the bonnet

If you open the engine bonnet when the engine has overheated or during a fire in the engine compartment, you could come into contact with hot gases or other escaping operating fluids.

▶ Before opening the bonnet, allow the engine to cool down.

▶ In the event of a fire in the engine compartment, keep the engine bonnet closed and call the fire service.

⚠ **WARNING** - Risk of fire and injury due to windscreen washer concentrate

Windscreen washer concentrate is highly flammable. It could ignite if it comes into contact with hot engine component parts or the exhaust system.

▶ Make sure that no windscreen washer concentrate spills out next to the filler opening.

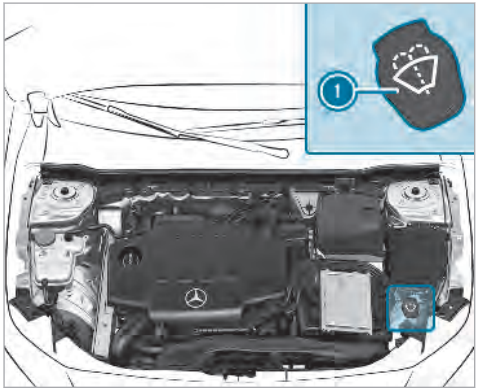

▶ Remove cap (1) by the tab.

▶ Top up the washer fluid.

Cleaning and care

Information on washing the vehicle in a car wash

⚠ **WARNING** Risk of an accident due to reduced braking power after washing the vehicle

Braking efficiency is reduced after washing the vehicle.

▶ After the vehicle has been washed, brake carefully while paying attention to the traffic conditions until braking power has been fully restored.

To avoid damage to your vehicle when using a car wash, ensure the following beforehand:

- Active Distance Assist DISTRONIC and the HOLD function are deactivated.
- the 360° camera or the reversing camera is switched off.
- the side windows and sliding sunroof are completely closed.
- the blower for the ventilation/heating is switched off.
- the windscreen wiper switch is in position [0].
- in car washes with a towing mechanism: neutral [N] is engaged.
- The key is at a distance of at least 3 m away from the vehicle, otherwise the tailgate could open unintentionally.

ⓘ If, after the car wash, you remove the wax from the windscreen and wiper rubbers, this will prevent smearing and reduce wiper noise.

Information on using a high-pressure cleaner

⚠ **WARNING** Risk of an accident when using high-pressure cleaners with circular jet nozzles

The water jet of a circular jet nozzle (dirt grinder) can cause externally invisible damage to the tyres or chassis parts.

Components damaged in this way may unexpectedly fail.

- ▶ Do not use high-pressure cleaners with circular jet nozzles to clean the vehicle.
- ▶ Have damaged tyres or chassis parts replaced immediately.

To avoid damage to your vehicle, observe the following when using a high-pressure cleaner:

- Keep the key at least 3 m away from the vehicle. Otherwise the tailgate could open unintentionally.
- Maintain a distance of at least 30 cm to the vehicle.
- **Vehicles with decorative foil:** parts of your vehicle are covered with a decorative foil. Maintain a distance of at least 70 cm between the foil-covered parts of the vehicle and the nozzle of the high-pressure cleaner. Move the high-pressure cleaner nozzle around whilst cleaning.
- Observe the information on the correct distance in the equipment manufacturer's operating instructions.
- Do not point the nozzle of the high-pressure cleaner directly at sensitive parts such as tyres, gaps, electrical components, batteries, light sources and ventilation slots.

Washing the vehicle by hand

Observe the legal requirements, e.g. in a number of countries, washing by hand is only permitted in specially designated wash bays.

- ▶ Use a mild cleaning agent, e.g. car shampoo.
- ▶ Wash the vehicle with lukewarm water using a soft car sponge. When doing so, do not expose the vehicle to direct sunlight.
- ▶ Carefully hose the vehicle off with water and dry using a chamois. Take care not to point the water jet directly towards the air inlet.

Notes on paintwork/matt finish paintwork care

Observe the following information:

	Cleaning and care	Avoiding paintwork damage
Paintwork	• Insect remains: soak with insect remover and rinse off the treated areas afterwards. • Bird droppings: soak with water and rinse off afterwards. • Coolant, brake fluid, tree resins, oils, fuel and greases: remove by gently rubbing with a cloth soaked in petroleum ether or lighter fluid. • Tar stains: use tar remover. • Wax: use silicone remover.	• Do not attach stickers, films or similar. • Remove dirt immediately, where possible.
Matt finish	• Only use care products approved by Mercedes-Benz.	• Do not polish the vehicle and light-alloy wheels. • Only use car washes that correspond to the latest engineering standards. • Do not use car wash programmes with a final hot wax treatment. • Do not use paint cleaners, buffing or polishing products, gloss preservers, e.g. wax. • Always have paintwork repairs carried out at a qualified specialist workshop.

Notes on care of car parts

⚠ **WARNING** Risk of entrapment if the windscreen wipers are switched on while the windscreen is being cleaned

If the windscreen wipers are set in motion while you are cleaning the windscreen or wiper blades, you can be trapped by the wiper arm.

▶ Always switch off the windscreen wipers and the ignition before cleaning the windscreen or wiper blades.

⚠ **WARNING** Risk of burns from tailpipes and tailpipe trim

The tailpipe and tailpipe trim can become very hot. If you come into contact with these parts of the vehicle, you could burn yourself.

▶ Always be particularly careful around the tailpipe and the tailpipe trim.

▶ Allow the vehicle parts to cool down before you touch them.

Observe the following information:

	Notes on cleaning and care	Avoiding vehicle damage
Wheels/rims	Use water and acid-free wheel cleaners.	• Do not use acidic wheel cleaners to remove brake dust. This could damage wheel bolts and brake components. • To avoid corrosion of the brake discs and brake pads, drive the vehicle for a few minutes after cleaning before parking it. The brake discs and brake pads warm up and dry out.
Windows	Clean the windows on the inside and outside using a damp cloth and cleaning agents recommended by Mercedes-Benz.	Do not use dry cloths or abrasive or solvent-based cleaning agents to clean the inside of windows.

	Notes on cleaning and care	Avoiding vehicle damage
Wiper blades	Fold out the wiper blades and clean them using a damp cloth.	Do not clean the wiper blades too often.
Exterior lighting	Clean the lenses with a wet sponge and mild cleaning agent, e.g. car shampoo.	Only use cleaning agents or cleaning cloths that are suitable for plastic covers.
Sensors	Clean the sensors in the front and rear bumper and in the radiator trim with a soft cloth and car shampoo.	When using a high-pressure cleaner, maintain a minimum distance of 30 cm.
Reversing camera and **360° Camera**	• Open the camera cover with the multimedia system (→ page 205). • Use clear water and a soft cloth to clean the camera lens.	Do not use a high-pressure cleaner.
Exhaust pipes	Clean with cleaning agents recommended by Mercedes-Benz, particularly in the winter and after washing the vehicle.	Do not use acidic cleaning agents.
Trailer tow hitch	• Remove traces of rust on the ball, e.g. with a wire brush. • Remove dirt with a lint-free cloth. • After cleaning, oil or grease the ball coupling lightly. • Observe the notes on care in the trailer tow hitch manufacturer's operating instructions.	Do not clean the ball coupling with a high-pressure cleaner or solvent.

Notes on care of the interior

⚠ **WARNING** Risk of injury from plastic parts breaking off after the use of solvent-based care products

Care and cleaning products containing solvents can cause surfaces in the cockpit to become porous.

When the airbags are deployed, plastic parts may break away.

▶ Do not use any care or cleaning products containing solvents to clean the cockpit.

⚠ **WARNING** Risk of injury or death from bleached seat belts

Bleaching or dyeing seat belts can severely weaken them.

This can, for example, cause seat belts to tear or fail in an accident.

▶ Never bleach or dye seat belts.

Observe the following information:

	Cleaning and care	Avoiding vehicle damage
Seat belts	Clean with lukewarm and soapy water.	• Do not use chemical cleaning agents. • Do not dry seat belts by heating them to over 80 °C or exposing them to direct sunlight.
Display	Clean the surface carefully with a microfibre cloth and TFT/LCD display care product.	• Switch off the display and let it cool down. • Do not use any other cleaning products.
Plastic trim	• Clean with a damp microfibre cloth. • For heavy soiling: use care product recommended by Mercedes-Benz.	• Do not attach stickers, films or similar. • Do not allow cosmetics, insect repellent or sun cream to come in contact with the plastic trim.

	Cleaning and care	Avoiding vehicle damage
Real wood/trim elements	• Clean with a microfibre cloth. • Piano-lacquer black look: clean with a damp cloth and soap solution. • For heavy soiling: use care product recommended by Mercedes-Benz.	Do not use solvent-based cleaning agents, polishes or waxes.
Roof lining	Clean with a brush or dry shampoo.	
Carpet	Use carpet and textile cleaning agents recommended by Mercedes-Benz.	
Genuine leather seat covers	• Clean with a damp cloth and then wipe with a dry cloth. • Leather care: use leather care agents that have been recommended by Mercedes-Benz.	Do not allow the leather to become too damp. Do not use a microfibre cloth.
DINAMICA seat covers	Clean with a damp cloth.	Do not use a microfibre cloth.
Artificial leather seat covers	Clean with a damp cloth and 1% soapy water.	Do not use a microfibre cloth.
Cloth seat covers	Clean with a damp cloth and 1% soapy water and allow to dry.	

Emergency

Removing the reflective safety jacket

The reflective safety jackets are located in the safety jacket compartments in the driver's and front-passenger door stowage compartments.

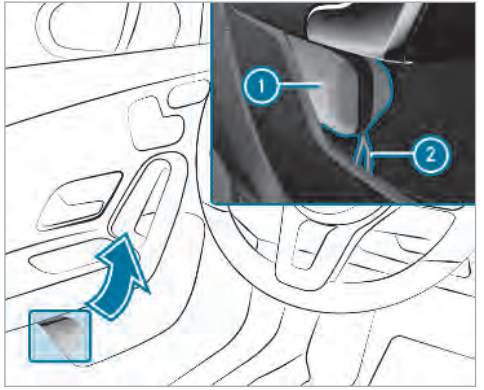

▶ **To remove:** pull out safety jacket bag ① by loop ②.

▶ Open safety jacket bag ① and pull out the safety jacket.

ⓘ There are also safety jacket compartments in the rear door stowage compartments in which safety jackets can be stowed.

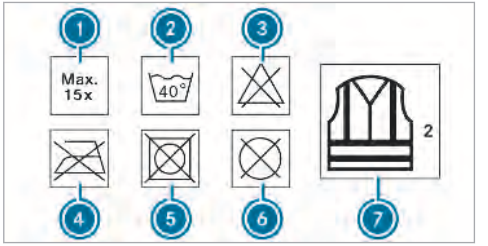

① Maximum number of washes
② Maximum wash temperature
③ Do not bleach
④ Do not iron
⑤ Do not use a laundry dryer
⑥ Do not dry-clean
⑦ This is a class 2 jacket

The requirements defined by the legal standard are only fulfilled if the safety jacket is the correct size and is fully closed.

Replace the safety jacket if:

- it is damaged or dirt on the reflective strips can no longer be removed
- the maximum number of washes is exceeded
- the fluorescence of the safety jacket has faded

Warning triangle

Removing the warning triangle

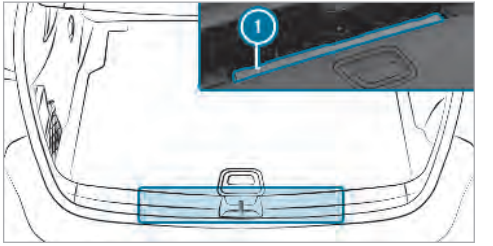

▶ Remove ① warning triangle.

Setting up the warning triangle

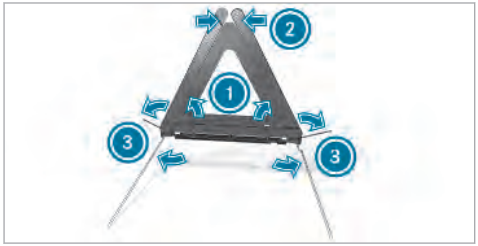

▶ Fold side reflectors ① upwards to form a triangle and attach at the top using press-stud ②.

▶ Fold legs ③ down and out to the side.

First-aid kit (soft sided)

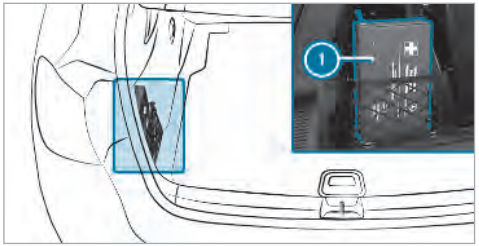

The first-aid kit ① is in the luggage compartment in the left-hand stowage net.

ⓘ Depending on the vehicle's equipment, the first-aid kit is in the recess in the side trim.

Removing the fire extinguisher

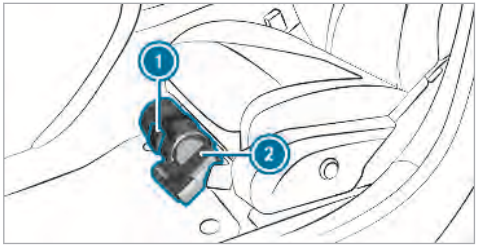

▶ **Left-hand-drive vehicle:** Pull tab ① upwards.

▶ Remove fire extinguisher ②.

Flat tyre

Notes on flat tyres

⚠ **WARNING** Risk of accident due to a flat tyre

A flat tyre severely affects the driving characteristics as well as the steering and braking of the vehicle.

Tyres without run-flat characteristics:

▶ Do not drive on with a flat tyre.

▶ Change the flat tyre immediately with the emergency spare wheel or spare wheel. Alternatively, consult a qualified specialist workshop.

Tyres with run-flat characteristics:

▶ Observe the information and warning notes on MOExtended tyres (run-flat tyres).

In the event of a flat tyre, the following options are available depending on your vehicle's equipment:

- **Vehicles with MOExtended tyres:** it is possible to continue the journey for a short period of time. Make sure you observe the notes on MOExtended tyres (run-flat tyres) (→ page 390).
- **Vehicles with a TIREFIT kit:** you can repair the tyre so that it is possible to continue the journey for a short period of time. To do this, use the TIREFIT kit (→ page 391).
- **Vehicles with Mercedes me connect:** you can make a call for breakdown assistance via the overhead control panel in the case of a breakdown (→ page 346).
- **All vehicles:** change the wheel (→ page 422).

ⓘ The emergency spare wheel is only available in certain countries.

Notes on MOExtended tyres (run-flat tyres)

⚠ **WARNING** Risk of accident when driving in limp-home mode

When driving in emergency mode the handling characteristics are impaired. e.g. when cornering, when accelerating strongly and when braking.

▶ Do not exceed the specified maximum speed.

▶ Avoid any abrupt steering and driving manoeuvres as well as driving over obstacles (kerbs, pot holes, off-road). This applies, in particular, to a loaded vehicle.

▶ Stop driving in the emergency mode if you notice:

- banging noise
- vehicle vibration
- smoke which smells like rubber
- continuous ESP® intervention
- cracks in tyre side walls

- ▶ After driving in emergency mode have the rims checked by a qualified specialist workshop with regard to their further use.
- ▶ The defective tyre must be replaced in every case.

With MOExtended tyres (run-flat tyres), you can continue to drive your vehicle even if there is a total loss of pressure in one or more tyres. However, the tyre affected must not show any clearly visible damage.

You can recognise MOExtended tyres by the MOExtended marking which appears on the side wall of the tyre.

Vehicles with tyre pressure loss warning system: MOExtended tyres may only be used in conjunction with an activated tyre pressure loss warning system.

Vehicles with tyre pressure monitoring system: MOExtended tyres may only be used in conjunction with an activated tyre pressure monitoring system.

If a pressure loss warning message appears in the multifunction display:

- Check the tyre for damage.
- If driving on, observe the following notes.

Driving distance possible in limp-home mode after the pressure loss warning:

Load condition	Driving distance possible in limp-home mode
Partially laden	80 km
Fully laden	30 km

- The driving distance possible in limp-home mode may vary depending on the driving style.
- Maximum permissible speed 80 km/h.

If a tyre has gone flat and cannot be replaced with an MOExtended tyre, you can use a standard tyre as a temporary measure.

Using the TIREFIT kit

Requirements

Have the following tools readily available:

- tyre sealant bottle
- TIREFIT sticker
- tyre inflation compressor

You can use TIREFIT tyre sealant to seal perforation damage of up to 4 mm, particularly those in the tyre contact surface. You can use TIREFIT in outside temperatures down to -20 °C.

⚠ **WARNING** Risk of accident when using tyre sealant

In the following situations, the tyre sealant is unable to provide sufficient breakdown assistance, as it is unable to seal the tyre properly:

- there are cuts or punctures in the tyre larger than those previously mentioned.
- the wheel rim is damaged.

- you have driven at very low tyre pressures or on a flat tyre.

▶ Do not drive on.

▶ Consult a qualified specialist workshop.

⚠ WARNING Risk of injury and poisoning from tyre sealant

Tyre sealant is hazardous to health and causes irritation. Do not allow it to come into contact with your skin, eyes or clothing, and do not swallow it. Do not inhale any vapours. Keep the tyre sealant away from children.

Observe the following if you come into contact with the tyre sealant:

▶ Rinse off the tyre sealant from your skin using water immediately.

▶ If tyre sealant gets into your eyes, thoroughly rinse them using clean water immediately.

▶ If tyre sealant has been swallowed, thoroughly rinse out your mouth immediately and drink plenty of water. Do not induce vomiting and seek medical attention immediately.

▶ Change out of clothing which has come into contact with tyre sealant immediately.

▶ If an allergic reaction occurs, seek medical attention immediately.

! NOTE Overheating due to the tyre inflation compressor running too long

▶ Do not run the tyre inflation compressor for longer than ten minutes without interruption.

Comply with the manufacturer's safety notes on the sticker on the tyre inflation compressor.

Have the tyre sealant bottle replaced in a qualified specialist workshop every five years.

▶ Do not remove any foreign objects which have entered the tyre.

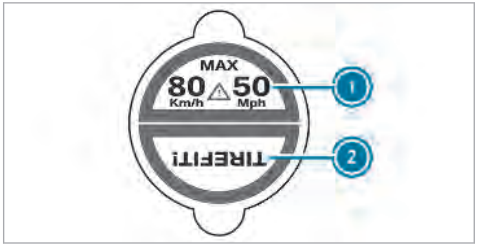

▶ Affix part ① of the TIREFIT sticker to the instrument cluster within the driver's field of vision.

▶ Affix part ② of the TIREFIT sticker near the valve on the wheel with the defective tyre.

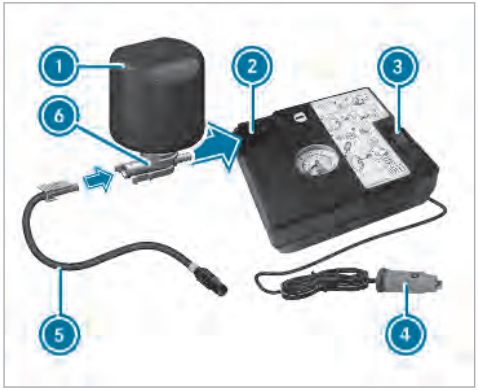

- Pull plug ④ with the cable and hose ⑤ out of the tyre inflation compressor housing.
- Push the plug of hose ⑤ into flange ⑥ of tyre sealant bottle ① until the plug engages.
- Place tyre sealant bottle ① head downwards into recess ② of the tyre inflation compressor.

- Remove the valve cap from valve ⑦ on the faulty tyre.
- Screw filling hose ⑧ onto valve ⑦.
- Insert plug ④ into a 12 V socket in your vehicle.
- Switch the ignition on.
- Press on and off switch ③ on the tyre inflation compressor.
  The tyre inflation compressor is switched on. The tyre is inflated. First, tyre sealant is pumped into the tyre. The pressure may briefly rise to approximately 500 kPa (5 bar/73 psi).

Do not switch off the tyre inflation compressor during this phase.

- Let the tyre inflation compressor run for a maximum of ten minutes.
  The tyre should then have attained a tyre pressure of at least 200 kPa (2.0 bar/29 psi).

If tyre sealant leaks out, make sure you clean the affected areas as quickly as possible. It is preferable to use clean water.

If you get tyre sealant on your clothing, have it cleaned as soon as possible with perchloroethylene.

If, after ten minutes, a tyre pressure of 200 kPa (2.0 bar/29 psi) has not been achieved:

- switch off the tyre inflation compressor.
- unscrew the filling hose from the valve of the defective tyre.

Please note that tyre sealant may leak out when unscrewing the filling hose.

- very slowly drive forwards or reverse approximately 10 m.
- Pump up the tyre again.
  After a maximum of ten minutes the tyre pressure must be at least 200 kPa (2.0 bar/29 psi).

WARNING Risk of accident due to the specified tyre pressure not being achieved

If the specified tyre pressure is not achieved after the specified time, the tyre is too badly damaged. The tyre sealant cannot repair the tyre in this instance.

Damaged tyres and a tyre pressure that is too low can significantly impair braking and handling characteristics.

- Do not drive on.
- Consult a qualified specialist workshop.

If, after ten minutes, a tyre pressure of 200 kPa (2.0 bar/29 psi) has been achieved:

- switch off the tyre inflation compressor.
- unscrew the filling hose from the valve of the defective tyre.

WARNING Risk of accident from driving with sealed tyres

A tyre temporarily sealed with tyre sealant impairs handling characteristics and is not suitable for higher speeds.

- Adapt your driving style accordingly and drive carefully.
- Do not exceed the specified maximum speed with a tyre that has been sealed using tyre sealant.

- Observe the maximum permissible speed for a tyre sealed with tyre sealant 80 km/h.
- Fasten the upper section of the TIREFIT sticker to the instrument cluster where it will be easily seen by the driver.

NOTE Staining from leaking tyre sealant

After use, excess tyre sealant may leak out from the filling hose.

- Therefore, place the filling hose in the plastic bag that contained the TIREFIT kit.

ENVIRONMENTAL NOTE Environmental pollution caused by environmentally irresponsible disposal

Tyre sealant contains pollutants.

- Have the tyre sealant bottle disposed of professionally, e.g. at a Mercedes-Benz Service Centre.

- Store the tyre sealant bottle, the tyre inflation compressor and the warning triangle.
- **Pull away immediately.**
- Stop driving after approximately ten minutes and check the tyre pressure using the tyre inflation compressor.
  The tyre pressure must now be at least 130 kPa (1.3 bar/19 psi).

⚠ **WARNING** Risk of accident due to the specified tyre pressure not being achieved

If the specified tyre pressure is not achieved after a brief drive, the tyre is too badly damaged. The tyre sealant cannot repair the tyre in this instance.

Damaged tyres and a tyre pressure that is too low can significantly impair braking and handling characteristics.

- Do not drive on.
- Consult a qualified specialist workshop.

Countries that have Mercedes-Benz Service24h: a sticker with the telephone number can also be found in your vehicle, e.g. on the B-pillar on the driver's side.

- Correct the tyre pressure if it is still at least 130 kPa (1.3 bar/19 psi). See the tyre pressure table on the fuel filler flap for values.
- **To increase the tyre pressure:** switch on the tyre inflation compressor.

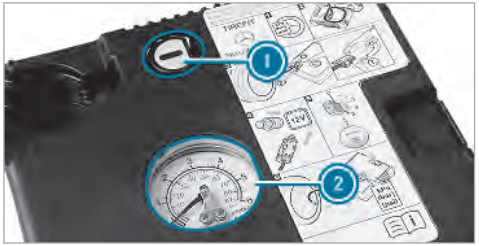

- **To reduce the tyre pressure:** press pressure release button ① next to manometer ②.
- When the tyre pressure is correct, unscrew the filling hose from the valve of the sealed tyre.
- Screw the valve cap onto the tyre valve of the sealed tyre.
- Pull the tyre sealant bottle out of the tyre inflation compressor.
  The filling hose stays on the tyre sealant bottle.
- Drive to the nearest qualified specialist workshop and have the tyre, tyre sealant bottle and filling hose replaced there.

Battery (vehicle)

Notes on the 12 V battery

⚠ **WARNING** Risk of an accident due to work carried out incorrectly on the battery

Work carried out incorrectly on the battery can, for example, lead to a short circuit. This can lead to function restrictions in safety-relevant systems, e.g. the lighting system, ABS (anti-lock braking system) or ESP® (Electronic Stability Program). The operating safety of your vehicle may be restricted.

You could lose control of the vehicle in the following situations:

- when braking
- in the event of abrupt steering manoeuvres and/or when the vehicle's speed is not adapted to the road conditions

- ▶ In the event of a short circuit or a similar incident, contact a qualified specialist workshop immediately.
- ▶ Do not continue driving.
- ▶ Always have work on the battery carried out at a qualified specialist workshop.

- Further information on ABS (→ page 169)
- Further information on ESP®(→ page 170)

For safety reasons, Mercedes-Benz recommends that you only use batteries which have been tested and approved for your vehicle by Mercedes-Benz. These batteries provide increased impact protection to prevent vehicle occupants from suffering acid burns should the battery be damaged in the event of an accident.

WARNING Risk of explosion due to electrostatic charge

Electrostatic charge can cause sparks which may ignite the highly flammable gas mixture in the battery.

- ▶ To discharge any electrostatic charge that may have built up, touch the metal vehicle body before handling the battery.

The highly flammable gas mixture is created while the battery is charging and during starting assistance.

WARNING Danger of chemical burns from the battery acid

Battery acid is caustic.

- ▶ Avoid contact with the skin, eyes or clothing.
- ▶ Do not lean over the battery.
- ▶ Do not inhale battery gases.
- ▶ Keep children away from the battery.
- ▶ Immediately rinse battery acid off thoroughly with plenty of clean water and seek medical attention immediately.

ENVIRONMENTAL NOTE Environmental damage due to improper disposal of batteries

Batteries contain pollutants. It is illegal to dispose of them with the household rubbish.

- ▶ Dispose of batteries in an environmentally responsible manner. Take discharged batteries to a qualified specialist workshop or to a collection point for used batteries.

If you have to connect the 12 volt battery, contact a qualified specialist workshop.

Comply with safety notes and take protective measures when handling batteries.

Risk of explosion.

Fire, naked flames and smoking are prohibited when handling the battery. Avoid creating sparks.

Electrolyte or battery acid is corrosive. Avoid contact with the skin, eyes or clothing. Wear suitable protective clothing, in particular gloves, an apron and a face mask. Immediately rinse electrolyte or acid splashes off with clean water. Consult a doctor if necessary.

Wear safety glasses.

Keep children away.

Observe this Owner's Manual.

If you do not intend to use the vehicle over an extended period of time:

- Activate standby mode, or
- Connect the battery to a battery charger approved by Mercedes-Benz, or
- Consult a qualified specialist workshop to disconnect the battery

Starting assistance and charging the 12 V battery

▶ When charging the battery and during starting assistance, always use the jump-start connection point in the engine compartment.

! NOTE Damaging the battery through overvoltage

When using a battery charger without a maximum charging voltage, the battery or the vehicle electronics may be damaged.

▶ Only use battery chargers with a maximum charging voltage of 14.8 V.

⚠ WARNING Risk of explosion from hydrogen gas igniting

A battery generates hydrogen gas during the charging process. If there is a short circuit or sparks start to form, there is a danger of the hydrogen gas igniting.

▶ Make sure that the positive terminal of the connected battery does not come into contact with vehicle parts.

▶ Never place metal objects or tools on a battery.

▶ When connecting and disconnecting the battery, you must observe the described order for the battery clamps.

▶ When giving starting assistance, always make sure that you only connect battery terminals with identical polarity.

▶ During starting assistance, you must observe the described order for con-

necting and disconnecting the jump lead.

▶ Do not connect or disconnect the battery clamps while the engine is running.

⚠ **WARNING** Risk of explosion during charging process and starting assistance

During the charging process and starting assistance, the battery may release an explosive gas mixture.

▶ Avoid fire, naked flames, creating sparks and smoking.

▶ Make sure that there is sufficient ventilation during the charging process and during starting assistance.

▶ Do not lean over a battery.

If the indicator/warning lamps in the instrument cluster do not light up at low temperatures, it is very likely that the discharged battery has frozen.

⚠ **WARNING** Risk of explosion from a frozen battery

A discharged battery may freeze at temperatures slightly above or below freezing point.

During starting assistance or battery charging, battery gas may be released.

▶ Always thaw a frozen battery out first before charging it or performing starting assistance.

The service life of a battery that has been thawed may be dramatically shortened.

It is recommended that you have a thawed battery checked at a qualified specialist workshop.

! **NOTE** Damage caused by numerous or extended attempts to start the engine

Numerous or extended attempts to start the engine may damage the catalytic converter due to non-combusted fuel.

▶ Avoid numerous and extended attempts to start the engine.

Observe the following points during starting assistance and when charging the battery:

- Only use undamaged jump lead/charging cables with a sufficient cross-section and insulated terminal clamps.
- Non-insulated parts of the terminal clamps must not come into contact with other metal parts while the jump lead/charging cable is connected to the battery/jump-start connection point.
- The jump lead/charging cable must not come into contact with any parts which may move when the engine is running.
- Always make sure that neither you nor the battery is electrostatically charged.
- Keep away from fire and naked flames.
- Do not lean over the battery.
- **When charging:** only use battery chargers tested and approved by Mercedes-Benz and read the battery charger's operating instructions before charging the battery.

Observe the additional following points during starting assistance:

- Starting assistance may only be provided using batteries with a nominal voltage of 12 V.
- The vehicles must not touch.
- **Petrol engine:** only accept starting assistance if the engine and exhaust system are cold.

▶ Secure the vehicle by applying the electric parking brake.

▶ **Automatic transmission:** shift the transmission to position P.

▶ Make sure that the ignition and all electrical consumers are switched off.

▶ Open the bonnet.

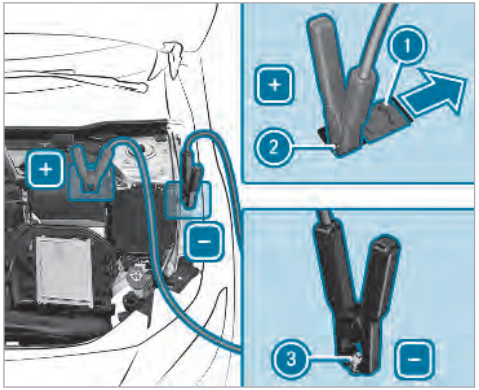

▶ Slide cover ① of positive clamp ② on the jump-starting connection point in the direction of the arrow.

▶ Connect positive clamp ② on your vehicle to positive pole of the donor battery using the jump lead/charging cable. Always begin with positive clamp ② on your own vehicle first.

▶ **During the starting assistance procedure:** start the engine of the donor vehicle and run at idle speed.

▶ Connect the negative pole of the donor battery and earth point ③ of your own vehicle by using the jump lead/charging cable. Begin with the donor battery first.

▶ **During starting assistance:** start the engine of your own vehicle.

▶ **During the charging process:** start the charging process.

▶ **During starting assistance:** let the engines run for several minutes.

▶ **During starting assistance:** before disconnecting the jump lead, switch on an electrical consumer in your own vehicle, e.g. the rear window heater or lighting.

When the starting assistance/charging process is complete:

▶ First, remove the jump lead/charging cable from earth point ③ and negative pole of the donor battery, then from positive clamp ② and positive pole of the donor battery. Begin

each time with the contacts on your own vehicle first.

▶ After removing the jump lead/charging cable, close cover ① of positive clamp ②.

Further information can be obtained at a qualified specialist workshop.

Replacing the 12 V battery

▶ Observe the notes on the 12 V battery (→ page 395).

Mercedes-Benz recommends that you have the 12 V battery replaced at a qualified specialist workshop, e.g. at a Mercedes-Benz Service Centre.

Observe the following notes if you want to replace the battery yourself:

- Always replace a faulty battery with a battery which meets the specific vehicle requirements.
- Carry over detachable parts, such as vent hoses, elbow fittings or terminal covers from the battery being replaced.
- Make sure that the vent hose is always connected to the original opening on the side of the battery.

  Fit any existing or supplied cell caps.

  Otherwise, gases or battery acid could escape.
- Make sure that detachable parts are reconnected in the same way.

Tow-starting or towing away

Permitted towing methods

Mercedes-Benz recommends transporting your vehicle in the case of a breakdown, rather than towing it away.

For towing, use a tow rope or tow bar with both axles on the ground. Do not use tow bar systems.

! **NOTE** Damage to the vehicle due to towing away incorrectly

▶ Observe the instructions and notes on towing away.

Permitted towing methods

Vehicle equipment/towing method	Both axles on the ground	Front axle raised	Rear axle raised
Vehicles with automatic transmission	Yes, maximum 50 km at 50 km/h	Yes, maximum 50 km at 50 km/h	Yes, maximum 50 km at 50 km/h

Towing with a raised axle: towing should be performed by a towing company.

Towing the vehicle with both axles on the ground

- ▶ Observe the notes on the permitted towing methods (→ page 400) (→ page 401).
- ▶ Make sure that the battery is connected and charged.

When the battery is discharged:

- the engine cannot be started.
- the electric parking brake cannot be released or applied.
- **vehicles with automatic transmission:** the automatic transmission cannot be shifted to position N or P.

ⓘ **vehicles with automatic transmission:** if the automatic transmission cannot be shifted to position N, or the multifunction display in the instrument cluster does not show anything, have the vehicle transported away(→ page 403). A towing vehicle with lifting equipment is required for vehicle transportation.

! NOTE Damage due to towing away at excessively high speeds or over long distances

The drivetrain could be damaged when towing at excessively high speeds or over long distances.

- ▶ A towing speed of 50 km/h must not be exceeded.
- ▶ A towing distance of 50 km must not be exceeded.

WARNING Risk of accident when towing a vehicle which is too heavy

If the vehicle being tow-started or towed away is heavier than the permissible gross mass, the following situations can occur:

- the towing eye may become detached.
- the car/trailer combination may swerve or even overturn.

▶ If another vehicle is tow-started or towed away, its weight must not exceed the permissible gross mass of your own vehicle.

If a vehicle must be tow started or towed away, its permissible gross mass must not exceed the permissible gross mass of the towing vehicle.

▶ Information on the permissible gross mass of the vehicle can be found on the vehicle identification plate .

▶ **Vehicles with automatic transmission:** do not open the driver's door or front passenger door, otherwise the automatic transmission automatically shifts to position P.

▶ Fit the towing eye (→ page 404).

▶ Attach the tow bar.

NOTE Damage due to incorrect connection

▶ Only connect the tow rope or tow bar to the towing eyes.

▶ Deactivate the automatic locking mechanism (→ page 72).

▶ Do not activate the HOLD function.

▶ Deactivate the tow-away protection (→ page 84).

▶ Deactivate Active Brake Assist (→ page 178).

▶ **Vehicles with automatic transmission:** shift the automatic transmission to position N.

▶ Release the electric parking brake.

WARNING Risk of accident due to limited safety-related functions during the towing process

Safety-related functions are limited or no longer available in the following situations:

- the ignition is switched off.
- the brake system or power steering system is malfunctioning.
- the energy supply or the on-board electrical system is malfunctioning.

When your vehicle is then towed away, significantly more effort may be required to steer and brake than is normally required.

▶ Use a tow bar.

▶ Make sure that the steering wheel can move freely, before towing the vehicle away.

NOTE Damage due to excessive tractive power

If you pull away sharply, the tractive power may be too high and the vehicles could be damaged.

▶ Pull away slowly and smoothly.

Loading the vehicle for transport

▶ Observe the notes on towing away (→ page 401).

▶ Connect the tow bar to the towing eye to load the vehicle.

ⓘ You can also attach the tow bar to the trailer hitch.

▶ **Vehicles with automatic transmission:** shift the automatic transmission to position N.

ⓘ **Vehicles with automatic transmission:** the automatic transmission may be locked in position P in the event of damage to the electrical system. To shift to N, provide the on-board electrical system with power (→ page 397).

▶ Load the vehicle onto the transporter.

▶ **Vehicles with automatic transmission:** shift the automatic transmission to position P.

▶ Use the electric parking brake to secure the vehicle and prevent it from rolling away.

▶ Only secure the vehicle by the wheels.

4MATIC vehicles/vehicles with automatic transmission

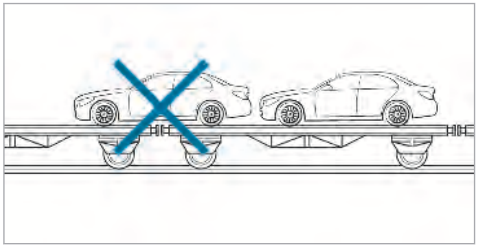

▶ Make sure that the front and rear axles come to rest on the same transportation vehicle.

NOTE Damage to the drivetrain due to incorrect positioning

▶ Do not position the vehicle above the connection point of the transport vehicle.

Towing eye storage location

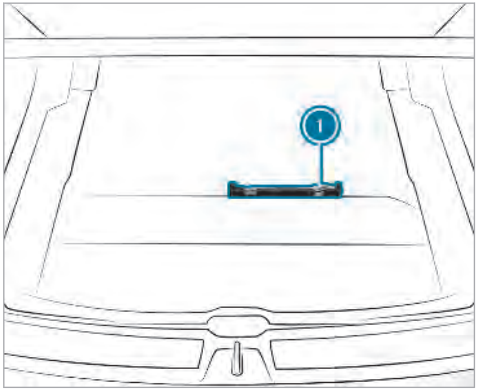

Towing eye ① is under the load compartment floor.

Installing the towing eye

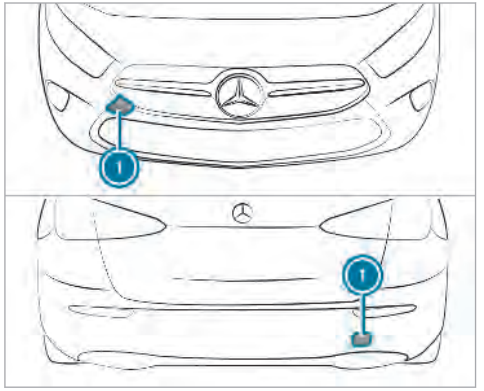

- Press the mark on cover ① inwards and remove.
- Screw in the towing eye clockwise as far as it will go and tighten.

Vehicles with a trailer hitch: vehicles with a trailer hitch do not have a rear bracket for the towing eye. Fasten the tow bar to the trailer hitch.

ⓘ Make sure that cover ① engages in the bumper when you remove the towing eye.

! NOTE Damage due to incorrect use of the towing eye

When a towing eye is used to recover a vehicle, the vehicle may be damaged in the process.

- Only use the towing eye to tow away or tow start the vehicle.

Tow-starting the vehicle (emergency engine starting)

Vehicles with automatic transmission

! NOTE Damage to the automatic transmission due to tow-starting

The automatic transmission may be damaged in the process of tow-starting vehicles with automatic transmission.

- Vehicles with automatic transmission must not be tow-started.

- Vehicles with automatic transmission must not be tow-started.

Electrical fuses

Notes on electrical fuses

⚠ WARNING Risk of accident and injury due to overloaded lines

If you manipulate or bridge a faulty fuse or if you replace it with a fuse with a higher

amperage, the electric line could be overloaded.

This could result in a fire.

▶ Always replace faulty fuses with specified new fuses containing the correct amperage.

! NOTE Damage caused by incorrect fuses

Incorrect fuses may cause damage to electrical components or systems.

▶ Only use Mercedes-Benz approved fuses with the correct fuse rating.

Blown fuses must be replaced with fuses of the same rating, which you can recognise by the colour and fuse rating. Only use fuses marked with an "S". The fuse ratings are listed in the fuse assignment diagram.

Fuse assignment diagram: on the fuse box in the engine compartment (→ page 405).

! NOTE Damage or malfunctions caused by moisture

Moisture may cause damage to the electrical system or cause it to malfunction.

▶ When the fuse box is open, make sure that no moisture can enter the fuse box.

▶ When closing the fuse box, make sure that the seal of the lid is positioned correctly on the fuse box.

If the newly inserted fuse also blows, have the cause traced and rectified at a qualified specialist workshop, e.g. a Mercedes-Benz Service Centre.

Ensure the following before replacing a fuse:

- The vehicle is secured against rolling away.
- All electrical consumers are switched off.
- The ignition is switched off.

The electrical fuses are located in various fuse boxes:

- Fuse box on the driver's side of the engine compartment (→ page 405)
- Fuse box in the front-passenger footwell (→ page 406)
- Fuse box in the central load compartment (→ page 407)

Fuse box in the engine compartment

Observe the notes on electrical fuses (→ page 404).

Have the following tools readily available:

- A dry cloth
- A screwdriver

Opening

WARNING Risk of injury from using the windscreen wipers while the engine bonnet is open

When the engine bonnet is open, and the windscreen wipers are set in motion, you can be trapped by the wiper linkage.

- Always switch off the windscreen wipers and ignition before opening the engine bonnet.

- Open the bonnet.

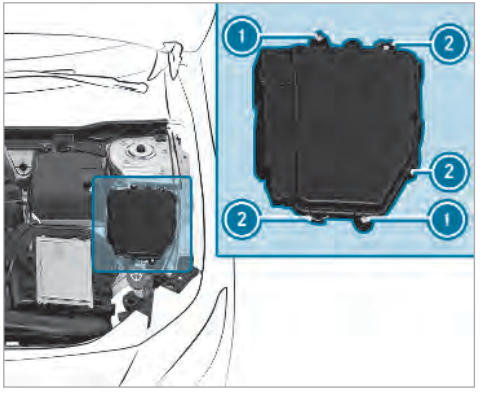

- Remove any existing moisture from the fuse box using a dry cloth.
- Loosen screws 1.
- Press clamps 2 and lift the fuse box lid up and out.

The fuse assignment diagram is in a recess on the side of the fuse box.

Closing

- Check whether the seal is positioned correctly in the lid.
- Place the lid on the fuse box.
- Make sure that clamps 2 engage.
- Tighten screws 1.
- Close the bonnet.

Fuse box in the front-passenger footwell

Observe the notes on electrical fuses (→ page 404).

Opening

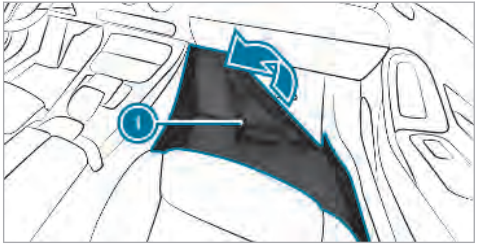

▶ Lift carpet ① in the direction of the arrow.

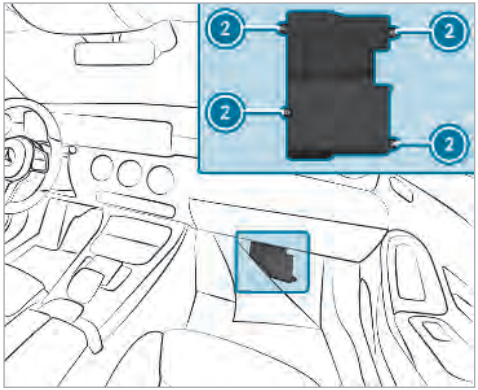

▶ Loosen screws ② and remove fuse box lid from the top.

Closing

▶ Place the lid on the fuse box.

▶ Tighten screws ②.

▶ Fold back carpet ①.

Fuse box in the load compartment

Observe the notes on electrical fuses (→ page 404).

▶ Open the luggage compartment floor .

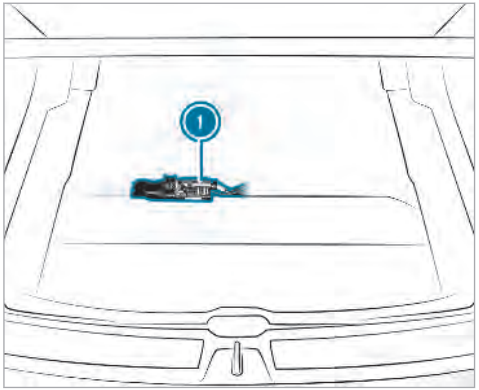

Fuse box ① is located in the centre underneath the luggage compartment floor.

Notes on noise or unusual handling characteristics

While driving, pay attention to vibrations, noises and unusual handling characteristics, e.g. pulling to one side. This may indicate that the wheels or tyres are damaged. If you suspect that a tyre is defective, reduce your speed immediately. Stop the vehicle as soon as possible to check the wheels and tyres for damage. Hidden tyre damage could also be causing the unusual handling characteristics. If you find no signs of damage, have the tyres and wheels checked at a qualified specialist workshop.

Regular checking of wheels and tyres

⚠ **WARNING** Risk of accident from damaged tyres

Damaged tyres can cause tyre pressure loss.

As a result, you could lose control of your vehicle.

▶ Check the tyres regularly for signs of damage and replace any damaged tyres immediately.

⚠ **WARNING** Risk of aquaplaning due to insufficient tyre tread

Insufficient tyre tread will result in reduced tyre grip. The tyre tread is no longer able to dissipate water.

This means that in heavy rain or slush the risk of aquaplaning is increased, in particular where speed is not adapted to suit the conditions.

If the tyre pressure is too high or too low, tyres may exhibit different levels of wear at different locations on the tyre tread.

▶ Thus, you should regularly check the tread depth and the condition of the tread across the entire width of all tyres.

Minimum tread depth for:

- Summer tyres: 3 mm
- M+S tyres: 4 mm

▶ For safety reasons, replace the tyres before the legally prescribed limit for the minimum tread depth is reached.

Carry out the following checks on all wheels regularly, at least once a month or as required, e.g. prior to a long journey or driving off-road:

- Check the tyre pressure (→ page 409).
- Visual inspection of wheels and tyres for damage.
- Check the valve caps.

  The valves must be protected against moisture and dirt by the valve caps approved especially for your vehicle by Mercedes-Benz.
- Visual check of the tyre tread depth and the tyre tread condition across the entire width.

  The minimum tread depth for summer tyres is 3 mm and for winter tyres 4 mm.

Notes on snow chains

⚠ **WARNING** Risk of accident due to incorrect snow chain fitting

If you fit snow chains to the rear wheels, the snow chains may grind against the vehicle body or chassis components.

This could cause damage to the vehicle or the tyres.

▶ Never fit snow chains to the rear wheels.

▶ Always fit snow chains to the front wheels in pairs.

NOTE Damage to the wheel trim from fitted snow chains

If snow chains are fitted to steel wheels, the wheel trims can be damaged.

▶ Remove the wheel trims of steel wheels before fitting snow chains.

- Snow chains are only permissible for certain wheel/tyre combinations. You can obtain information about this from a Mercedes-Benz Service Centre.
- For safety reasons, only use snow chains that have been specifically approved for your vehicle by Mercedes-Benz, or snow chains with the same quality standard.
- If snow chains are fitted, the maximum permissible speed is 50 km/h.
- **Vehicles with Active Parking Assist:** do not use Active Parking Assist when snow chains are fitted.

ⓘ You can permanently limit the maximum vehicle speed for driving with winter tyres (→ page 182).

ⓘ You can deactivate ESP® to pull away (→ page 172). This allows the wheels to spin, achieving an increased driving force.

Tyre pressure

Notes on tyre pressure

⚠ **WARNING** Risk of accident due to insufficient or excessive tyre pressure

Underinflated or overinflated tyres pose the following risks:

- The tyres may burst, especially as the load and vehicle speed increase.
- The tyres may wear excessively and/or unevenly, which may greatly impair tyre traction.
- The driving characteristics, as well as steering and braking, may be greatly impaired.

▶ Comply with the recommended tyre pressure and check the tyre pressure of all tyres including the spare wheel regularly:

- at least once a month
- when the load changes

- before embarking on a longer journey
- if operating conditions change, e.g. off-road driving

▶ Adjust the tyre pressure as necessary.

Driving with tyre pressure that is too high or too low can:

- Shorten the service life of the tyres.
- Cause increased tyre damage.
- Adversely affect driving characteristics and thus driving safety, e.g. due to aquaplaning.

⚠ **WARNING** Risk of accident from repeated tyre pressure drop

If the tyre pressure drops repeatedly, the wheel, valve or tyre may be damaged.

Insufficient tyre pressure can cause the tyres to burst.

▶ Inspect the tyre for signs of foreign objects.

▶ Check whether the wheel or valve has a leak.

▶ If you are unable to rectify the damage, contact a qualified specialist workshop.

Information on the recommended tyre pressure for the vehicle's factory-fitted tyres can be found on the tyre pressure table on the inside of the fuel filler flap (→ page 410).

Use a suitable pressure gauge to check the tyre pressure. The outer appearance of a tyre does not permit any reliable conclusion about the tyre pressure.

Vehicles with a tyre pressure monitoring system: you can also check the tyre pressure using the on-board computer.

Only correct tyre pressures when the tyres are cold. Conditions for cold tyres:

- The vehicle has been parked with the tyres out of direct sunlight for at least three hours.
- The vehicle has travelled less than 1.6 km.

A rise in the tyre temperature of 10 °C increases the tyre pressure by approx. 10 kPa (0.1 bar/1.5 psi). Take this into account when checking the tyre pressure of warm tyres.

Trailer operation notes

Always inflate the rear axle tyres to the recommended tyre pressures on the tyre pressure table for increased load.

Tyre pressure table

The tyre pressure table is on the inside of the fuel filler flap.

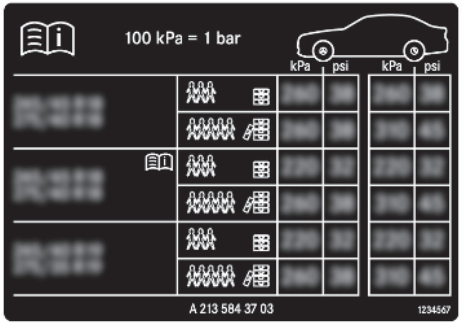

The tyre pressure table shows the recommended tyre pressure for all tyres approved for this vehicle. The recommended tyre pressures apply for cold tyres under various operating conditions, i.e. loading and/or speed of the vehicle.

If one or more tyre sizes precede a tyre pressure, the tyre pressure information following is only valid for those tyre sizes.

If the preceding tyre sizes are complemented by the symbol, the tyre pressure information following shows alternative tyre pressures. These tyre pressures may improve your vehicle's ride comfort. Fuel consumption may then increase slightly.

The load conditions "partially laden" and "fully laden" are defined in the table for different numbers of passengers and amounts of luggage. The actual number of seats may differ from this.

Be sure to also observe the following further related subjects:

- Notes on tyre pressure (→ page 409)

Tyre pressure monitoring system

Function of the tyre pressure monitoring system

The system checks the tyre pressure and the tyre temperature of the tyres fitted to the vehicle by means of a tyre pressure sensor.

New tyre pressure sensors, e.g. in winter tyres, are automatically taught-in the first time they are driven.

The tyre pressure and the tyre temperature appear in the multifunction display (→ page 231).

If there is a substantial pressure loss or if the tyre temperature is excessive, a warning will be given:

- Via display messages (→ page 477).
- Via the warning lamp in the instrument cluster (→ page 511).

It is the driver's responsibility to set the tyre pressure to the recommended cold tyre pressure suitable for the operating situation. Set the tyre pressure for cold tyres using a tyre pressure gauge. Note that the correct tyre pressure for the current operating situation must first be taught-in to the tyre pressure monitoring system.

In most cases, the tyre pressure monitoring system will automatically update the new reference values after you have changed the tyre pressure. You can, however, also update the reference values by restarting the tyre pressure monitoring system manually (→ page 412).

System limitations

The system may be impaired or may not function in the following situations:

- If the tyre pressure is set incorrectly.
- If there is a sudden pressure loss caused, for example, by a foreign object penetrating the tyre.
- If there is a malfunction caused by another radio signal source.

Make sure to observe the following further related subject:

- Notes on tyre pressure (→ page 409)

Checking the tyre pressure with the tyre pressure monitoring system

Requirement:

- the ignition is switched on.

On-board computer:

Service ▸▸ Tyres

One of the following displays appears:

- Current tyre pressure and tyre temperature of the individual wheels:

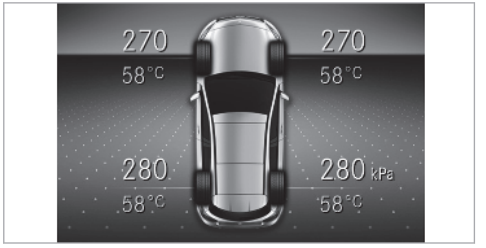

- Tyre pressures will be displayed after a few minutes of driving
- Tyre pressure monitor active: the teach-in process of the system is not yet complete. The tyre pressures are already being monitored.

▶ Compare the tyre pressure with the recommended tyre pressure for the current operating condition (→ page 410). Observe the notes on tyre temperature (→ page 409).

ⓘ The values displayed in the multifunction display may deviate from those of the tyre pressure gauge as they refer to sea level. At high altitudes, the tyre pressure values indicated by pressure gauges are higher than those shown by the on-board computer. In this case, do not reduce the tyre pressure.

Make sure to observe the following further related subject:

- Notes on tyre pressure (→ page 409)

Restarting the tyre pressure monitoring system

Requirements:

- The recommended tyre pressure is correctly set for the respective operating condition on each of the four wheels (→ page 409).

Restart the tyre pressure monitoring system in the following situations:

- The tyre pressure has changed.
- The wheels or tyres have been changed or newly fitted.

On-board computer:

→ Service ▸▸ Tyres

- ▶ Swipe downwards on Touch Control on the left-hand side of the steering wheel.
  The Use current pressures as new reference values? message is shown in the multifunction display.
- ▶ To begin restart, press Touch Control on the left-hand side of the steering wheel.
  The OK message is shown in the multifunction display.

  Current warning messages are deleted and the [(!)] yellow warning lamp goes out.

  After you have driven for a few minutes, the system checks whether the current tyre pressures are within the specified range. The current tyre pressures are then accepted as reference values and monitored.

Make sure to observe the following further related subject:

- Notes on tyre pressure (→ page 409)

Radio-equipment approval of the tyre pressure monitoring system

Radio equipment approval numbers

Country	Radio equipment approval number
Abu Dhabi	Huf Electronics Bretten GmbH Model: TSSRE4A Model: TSSSG4G6 TRA Registered No: ERXXXXX/XX Dealer No: DAXXXXXXX/XX
Australia	
Brazil	ANATEL MODELO: TSSRE4A ANATEL: XXXX-XX-XXXX Este equipamento opera em caráter secundário, isto é, não tem direito à proteção contrainterferência prejudicial, mesmo de estações do mesmo tipo e não pode causar interferência a sistemas operando em caráter primário.

Country	Radio equipment approval number
Dubai	Huf Electronics Bretten GmbH Model: TSSRE4A Model: TSSSG4G6 TRA Registered No: ERXXXXX/XX Dealer No: DAXXXXXXX/XX

Country	Radio equipment approval number
European Union Iceland Norway	CE Hereby, Huf Hülsbeck & Fürst GmbH & Co. KG declares that the radio equipment type TSSRE4A & TSSSG4G6 is in compliance with Directive 2014/53/EU. The full text of the EU declaration of conformity is available at the following internet address: http:// www.huf-group.com/ eudoc Frequency band: 433,92 MHz Maximum Transmission Power: <10 mW Manufacturer: Huf Electronics Bretten GmbH Gewerbestr. 40 75015 Bretten Germany
Indonesia	POSTEL 827872337732
Israel	A. The use of this product does not need a wireless operation license. B. The product does not include an RF disturbance protection, and should not disturb other licensed products. C. It is forbidden to replace the antenna or to make any change in this product.

Country	Radio equipment approval number
Jordan	Kingdom of Jordan Type approval for Tyre Pressure Sensor and ECU Manufacturer: Huf Electronics Bretten GmbH Model: TSSRE4Dg Type Approval Number: TRC/LPD/2017/223 Model: TSSSG4G6 Type Approval Number: TRC/LPD/2017/223
Malaysia	XXXX/XXX/XXXX/XXXXXX
Morocco	AGREE PAR L'ANRT MAROC Numero d'agrement: MR XXXXX ANRT 2017 Date d'agrement: XX/XX/2017
Mexico	IFT: XXXXXXXXX-XXXX IFT: XXXXXXXXX-XXXX

Country	Radio equipment approval number
Moldova	1024
Oman	OMAN - TRA X/NNNN/YY Dyynnnn
Philip-pines	NTC Type Approved. No: ESD-XXXXXXXX

Country	Radio equipment approval number
Russia	EAC Model: TSSRE4A XXXXXXXXXXXXXX Model: TSSSG4G6 XXXXXXXXXXXXXX
Singapore	Complies with IDA Standards DA103787
South Africa	ICASA Type approval number: TA-2017/XXXX Type approval number: TA-2017/XXXX

Country	Radio equipment approval number
Taiwan	經型式認證合格之低功率射頻電機,非經許可,公司、商號或使用者均 不得擅自變更頻率、加大功率或變更原設計之特性及功能。低功率射 頻電機之使用不得影響飛航安全及干擾合法通信;經發現有干擾現象 時,應立即停用,並改善至無干擾時方得繼續使用。前項合法通信,指依 電信法規定作業之無線電通信。低功率射頻電機須忍受合法通信或工 業、科學及醫療用電波輻射性電機設備之干擾。

Country	Radio equipment approval number
	According to “Administrative Regulations on Low Power Radio Waves Radiated Devices”. Without permission granted by the DGT, any company, enterprise, or user is not allowed to change frequency, enhance transmitting power or alter original characteristic as well as performance to a approved low power radio-frequency devices. The low power radio-frequency devices shall not influence aircraft security and interfere legal communications; If found, the user shall cease operating immediately until no interference is achieved. The said legal communications means radio communications is operated in compliance with the Telecommunications Act.

Country	Radio equipment approval number
	The low power radio-frequency devices must be susceptible with the interference from legal communications or ISM radio wave radiated devices.
Thailand	This telecommunication equipment conforms to NTC technical requirement.
Ukraine	XX.XXX.XX.XXXX-XX
United Arab Emirates	Huf Electronics Bretten GmbH Model: TSSRE4A Model: TSSSG4G6 TRA Registered No: ERXXXXX/XX Dealer No: DAXXXXXXX/XX

Tyre pressure loss warning system

Function of the tyre pressure loss warning system

The tyre pressure loss warning system warns the driver by means of display messages when there is a severe tyre pressure loss.

After a change in tyre pressure, a wheel rotation or a wheel change, the tyre pressure loss warning system has to be taught-in again by being restarted (→ page 417).

The tyre pressure loss warning system does not replace the need to regularly check the tyre pressures.

System limitations

The system may be impaired or may not function in the following situations:

- If the tyre pressure is set incorrectly.
- If there is a sudden pressure loss caused, for example, by a foreign object penetrating the tyre.
- If the pressure loss in several tyres decreases at the same rate.

The system has a limited or delayed function:

- When the road surface is poor, e.g. snow or gravel.
- When driving with snow chains.
- When driving in a very sporty driving style with high cornering speeds or sudden acceleration.
- When driving with a high load.

Be sure to also observe the following further related subjects:

- Notes on tyre pressure (→ page 409)
- Display messages about the tyres (→ page 477)

Restarting the tyre pressure loss warning system

Requirement:

- The recommended tyre pressure is correctly set for the respective operating condition on each of the four wheels (→ page 409).

On-board computer:

Service ▸▸ Tyres

▶ Swipe downwards on Touch Control on the left-hand side of the steering wheel.
The Tyre pressure loss warning activeRestart message is shown in the multifunction display.

Restart the tyre pressure loss warning system in the following situations:

- The tyre pressure has changed.
- The wheels or tyres have been changed or newly fitted.

▶ To begin restart, press Touch Control on the left-hand side of the steering wheel.
The Tyre pressure now OK? message is shown in the multifunction display.

▶ Select Yes.

▶ To confirm restart, press Touch Control on the left-hand side of the steering wheel.
The Run Flat Indicator restarted message is shown in the multifunction display.

After you have driven for a few minutes, the tyre pressure loss warning system monitors the set tyre pressures of all the tyres.

Be sure to also observe the following further related subjects:

- Notes on tyre pressure (→ page 409)

Wheel change

Notes on selecting, fitting and replacing tyres

You can ask for information regarding permitted wheel/tyre combinations at a Mercedes-Benz Service Centre.

WARNING Risk of accident due to incorrect dimensions of wheels and tyres

If wheels and tyres of the wrong size are used, the wheel brakes or wheel suspension components may become damaged.

▶ Always replace wheels and tyres with those that fulfil the specifications of the original part.

When replacing wheels, make sure to fit the correct:

- Designation
- Type

When replacing tyres, make sure to fit the correct:

- Designation
- Manufacturer
- Type

WARNING Risk of injury through exceeding the specified tyre load-bearing capacity or the permissible speed rating

Exceeding the specified tyre load-bearing capacity or the permissible speed rating may lead to tyre damage and to the tyres bursting.

▶ Therefore, only use tyre types and sizes approved for your vehicle model.

▶ Observe the tyre load-bearing capacity rating and speed rating required for your vehicle.

NOTE Damage to vehicle and tyres due to non-approved tyre types and sizes

For safety reasons, only use wheels, tyres and accessories which have been approved for your vehicle by Mercedes-Benz.

These tyres have been specially adapted for use with the control systems, e.g. ABS or ESP®, and are marked as follows:

- MO = Mercedes-Benz Original
- MOE = Mercedes-Benz Original Extended (run-flat tyres only for certain wheels)
- MO1 = Mercedes-Benz Original (only certain AMG tyres)

Certain characteristics, e.g. handling, vehicle noise emissions or fuel consumption, may otherwise be adversely affected. In addition, when driving with a load, tyre dimension variations could cause the tyres to come into

contact with the body and axle components. This could result in damage to the tyres or the vehicle.

Only use tyres, wheels or accessories tested and approved by Mercedes-Benz.

NOTE Risk to driving safety from retreaded tyres

Retreaded tyres are neither tested nor recommended by Mercedes-Benz, since previous damage cannot always be detected on retreaded tyres.

For this reason driving safety cannot be guaranteed.

▶ Do not use used tyres if you have no information about their previous usage.

NOTE Possible damage to wheels or tyres when driving over obstacles

Large wheels have a lower tyre section width. The lower the tyre section width, the greater is the risk of damage to wheels or tyres when driving over obstacles.

▶ Avoid obstacles or drive particularly carefully.

NOTE Damage to electronic component parts from the use of tyre-fitting tools

Vehicles with a tyre pressure monitoring system: electronic component parts are located in the wheel. Tyre-fitting tools should not be applied in the area of the valve.

The tools could damage the electronic component parts.

▶ Have the tyres changed at a qualified specialist workshop only.

NOTE Damage to summer tyres at low ambient temperatures

Using summer tyres at very low ambient temperatures can cause cracks to form, thereby damaging the tyres permanently.

▶ At temperatures below 7 °C use M+S-tyres.

Accessory parts that are not approved for your vehicle by Mercedes-Benz or are not being used correctly can impair the operating safety.

Before purchasing and using non-approved accessories, visit a qualified specialist workshop and enquire about:

- Suitability
- Legal stipulations
- Factory recommendations

WARNING Risk of accident with high performance tyres

The special tyre tread in combination with the optimised tyre compound, means that the risk of skidding or hydroplaning on wet roads is increased.

In addition, the tyre grip is greatly reduced at a low outside temperature and tyre running temperature.

- ▶ Switch on the ESP® and adapt your driving style accordingly.
- ▶ Use M+S tyres at outside temperatures of less than 50 °F.

Observe the following when selecting, fitting and replacing tyres:

- Country-specific requirements for tyre approval that define a specific tyre type for your vehicle.

  Furthermore, the use of certain tyre types in certain regions and areas of operation can be highly beneficial.
- Only use tyres and wheels of the same type (summer tyres, winter tyres, MOExtended tyres) and the same make.
- Only fit wheels of the same size on one axle (left and right).

  It is only permissible to fit a different wheel size in the event of a flat tyre in order to drive to the specialist workshop.
- Only fit tyres of the correct size onto the wheels.
- Do not make any modifications to the brake system, the wheels or the tyres.

  The use of shims or brake dust shields is not permitted and may invalidate the vehicle's general operating permit.
- **Vehicles with a tyre pressure monitoring system:** all fitted wheels must be equipped with functioning sensors for the tyre pressure monitoring system.
- At temperatures below 7 °C, use winter tyres or all-season tyres marked M+S for all wheels.

  Winter tyres bearing the snowflake symbol in addition to the M+S marking provide the best possible grip in wintry road conditions.
- For M+S tyres, only use tyres with the same tread.
- Observe the maximum permissible speed for the M+S tyres fitted.

  If this is below the vehicle's maximum speed, this must be indicated in an appropriate label in the driver's field of vision.
- Run in new tyres at moderate speeds for the first 100 km.
- Replace the tyres after six years at the latest, regardless of wear.
- **When replacing with tyres that do not feature run-flat characteristics:** vehicles with MOExtended tyres are not equipped with a TIREFIT kit at the factory. Equip the vehicle with a TIREFIT kit after replacing with tyres that do not feature run-flat characteristics, e.g. winter tyres.

For more information on wheels and tyres, contact a qualified specialist workshop.

Be sure to also observe the following further related subjects:

- Notes on tyre pressure (→ page 409)
- Tyre pressure table (→ page 410)
- Notes on the emergency spare wheel (→ page 427)

Notes on interchanging wheels

WARNING Risk of injury through different wheel sizes

Interchanging the front and rear wheels if the wheels or tyres have different dimensions may severely impair the driving characteristics.

The disk brakes or wheel suspension components may also be damaged.

▶ Rotate front and rear wheels only if the wheels and tyres are of the same dimensions.

Interchanging the front and rear wheels if the wheels or tyres have different dimensions can render the general operating permit invalid.

The wear patterns on the front and rear wheels differ:

- Front wheels wear more on the shoulder of the tyre
- Rear wheels wear more in the centre of the tyre

On vehicles with the same front and rear wheel size, you can interchange the wheels every 5,000 to 10,000 km, depending on the wear. Ensure the direction of rotation is maintained for the wheels.

It is imperative to observe the instructions and safety notes on "Wheel change" when doing so.

Notes on storing wheels

- After removing wheels, store them in a cool, dry and preferably dark place.
- Protect the tyres from contact with oil, grease or fuel.

Overview of the tyre-change tool kit

Apart from some country-specific variants, vehicles are not equipped with a tyre-change tool kit. For more information on which tyre-changing tools are required and approved for performing a wheel change on your vehicle, consult a qualified specialist workshop.

Required tyre-change tool kits may include, for example:

- Jack
- Chock
- Wheel wrench
- Centring pin

ⓘ The jack weighs approximately 3.4 kg. The maximum payload of the jack can be found on the sticker affixed to the jack. The jack is maintenance-free. If there is a malfunction, please contact a qualified specialist workshop.

The tyre-change tool kit is in tool bag ① under the load compartment floor.

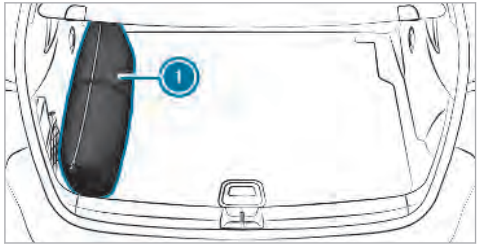

① Tool bag

Tool bag ① contains:

- Jack
- Gloves
- Wheel wrench
- Centring pin
- Folding wheel chock
- Ratchet for jack

Setting up the folding wheel chock

Preparing the vehicle for a wheel change

Requirements:

- The required tyre-change tool kit is available. If your vehicle is not equipped with the tyre-change tool kit, consult a qualified specialist workshop to find out about suitable tools.
- The vehicle is not on a slope.
- The vehicle is on solid, non-slippery and level ground.

▶ Apply the electric parking brake manually.

▶ Move the front wheels to the straight-ahead position.

▶ **Vehicles with automatic transmission:** shift into position P.

▶ Switch off the engine.

▶ Make sure that the engine cannot be started.

▶ Place chocks or other suitable items under the front and rear of the wheel that is diagonally opposite the wheel you wish to change.

▶ Remove the hub caps if necessary (→ page 422).

▶ Raising the vehicle (→ page 423).

Removing and fitting hub caps

Requirements:

- The vehicle is prepared for a wheel change (→ page 422).

Vehicles with steel wheels
The wheel trim covers the wheel bolts. Before you can unscrew the wheel bolts, you must remove the wheel trim.

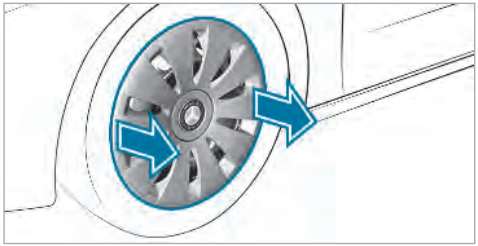

▶ **To remove:** using both hands, carefully reach into two wheel trim openings and remove the wheel trim.

Plastic hub cap

▶ **To remove:** turn the centre cover of the hub cap anti-clockwise and remove the hub cap.

▶ **To fit:** make sure that the centre cover of the hub cap is turned anti-clockwise.

▶ Position the hub cap and turn the centre cover clockwise until the hub cap engages physically and audibly.

Raising the vehicle when changing a wheel

Requirements:
- There are no persons in the vehicle.
- The vehicle has been prepared for a wheel change (→ page 422).
- The hub caps have been removed (→ page 422).

Important notes on using the jack:
- only use the vehicle-specific jack that has been tested and approved by Mercedes-Benz to raise the vehicle.
- the jack is only designed for raising and holding the vehicle for a short time while a wheel is being changed and not for maintenance work under the vehicle.
- the jack must be placed on a firm, flat and non-slip surface. If necessary, use a large, load-bearing, non-slip underlay.
- the foot of the jack must be positioned vertically under the jacking point.

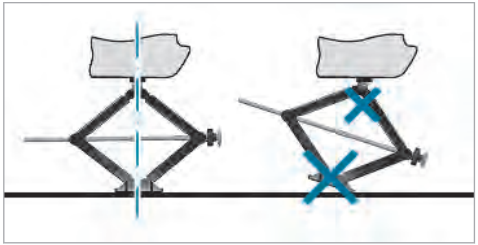

Rules of conduct when the vehicle is raised:
- Never place your hands or feet under the vehicle.
- Do not lie under the vehicle.
- Do not start the engine and do not release the electric parking brake.
- Do not open or close any doors or the tailgate.

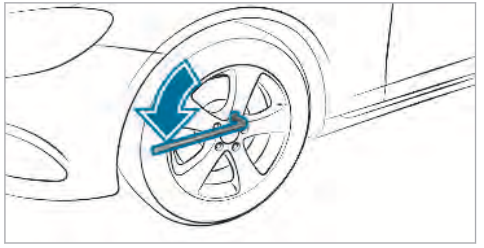

▶ Using the wheel wrench, loosen the wheel bolts on the wheel you wish to change by about one full turn. Do not unscrew the bolts completely.

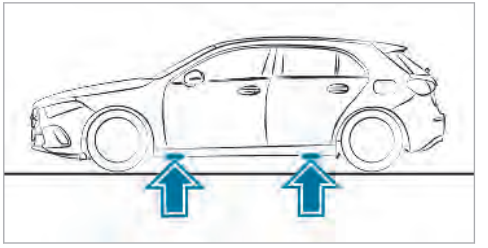

Position of jack support points

⚠ WARNING Risk of injury from incorrect positioning of the jack

If you do not position the jack correctly at the appropriate jacking point of the vehicle, the jack could tip with the vehicle raised.

▶ Only position the jack at the appropriate jacking point of the vehicle. The base of the jack must be positioned vertically under the jacking point of the vehicle.

! NOTE Vehicle damage from the jack

If you do not position the jack correctly at the appropriate jack support point of the vehicle, the jack could tip over with the vehicle raised.

▶ The jack is designed exclusively for jacking up the vehicle at the jack support points.

▶ Take the ratchet ring spanner out of the tyre-change tool kit and place it on the hexagon nut of the jack so that the lettering "AUF" is visible.

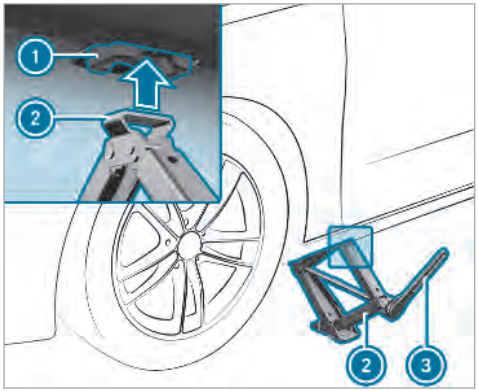

- Position jack ② at jack support point ①.
- Turn ratchet ring spanner ③ clockwise until jack ② sits completely on jack support point ① and the base of the jack lies evenly on the ground.
- Continue to turn ratchet ring spanner ③ until the tyre is raised a maximum of 3 cm off the ground.
- Loosen and remove the wheel (→ page 425).

Removing a wheel

Requirement:
- The vehicle is raised (→ page 423).

When changing a wheel, avoid applying any force to the brake discs, since this could impair the level of comfort when braking.

! **NOTE** Damage to threading from dirt on wheel bolts

- Do not place wheel bolts in sand or on a dirty surface.

- Unscrew the uppermost wheel bolt completely.

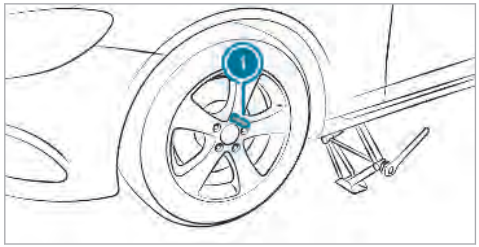

- Screw centring pin ① instead of the wheel bolt into the threading.
- Unscrew the remaining wheel bolts fully.
- Remove the wheel.
- Fit the new wheel (→ page 425).

Fitting a new wheel

Requirement:
- The wheel is removed (→ page 425).

WARNING Risk of accident from losing a wheel

Oiled, greased or damaged wheel bolt/wheel nut threads or wheel hub/wheel mounting bolt threads can cause the wheel bolts/wheel nuts to come loose.

As a result, you could lose a wheel while driving.

- Never oil or grease the threads.
- In the event of damage to the threads, contact a qualified specialist workshop immediately.
- Have the damaged wheel bolts or damaged hub threads replaced.
- Do not continue driving.

- Observe the information on the choice of tyres (→ page 418).

For tyres with a specified direction of rotation, an arrow on the side wall of the tyre indicates the correct direction of rotation. Observe the direction of rotation when fitting.

- Slide the wheel to be mounted onto the centring pin and push it on.

WARNING Risk of injury from tightening wheel bolts and nuts

If you tighten the wheel bolts or wheel nuts when the vehicle is raised, the jack could tip.

- Only tighten wheel bolts or wheel nuts when the vehicle is on the ground.

- For safety reasons, only use wheel bolts which have been approved by Mercedes-Benz and for the wheel in question.
- Tighten the wheel bolts until they are finger-tight.
- Unscrew the centring pin.
- Tighten the last wheel bolt until it is finger-tight.
- Lower the vehicle (→ page 426).

Lowering the vehicle after a wheel change

Requirements:

- The new wheel has been fitted (→ page 425).

- Place the ratchet ring spanner onto the hexagon nut of the jack so that the lettering "AB" is visible.
- **To lower the vehicle:** turn the ratchet ring spanner of the jack anti-clockwise.

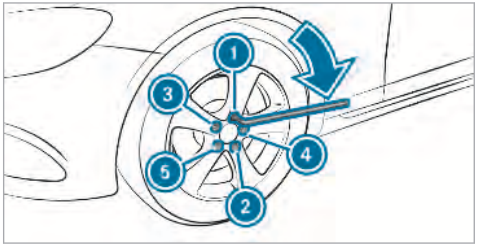

- Tighten the wheel bolts evenly in a diagonal pattern in the order indicated (1 to 5). **Specified tightening torque:** 130 Nm.

⚠ **WARNING** Risk of injury through incorrect tightening torque

The wheels could come loose if the wheel bolts or wheel nuts are not tightened to the prescribed tightening torque.

▶ Have the tightening torque checked immediately at a qualified specialist workshop after changing a wheel.

▶ Check the tyre pressure of the newly mounted wheel and adjust accordingly.

▶ **Vehicles with tyre pressure loss warning system:** restart the tyre pressure loss warning system (→ page 417).
Exception: the new wheel is an emergency spare wheel.

▶ **Vehicles with a tyre pressure monitoring system:** restart the tyre pressure monitoring system (→ page 412).
Exception: the new wheel is an emergency spare wheel.

Make sure to observe the following further related subject:

- Notes on tyre pressure (→ page 409)

Emergency spare wheel

Notes on the emergency spare wheel

⚠ **WARNING** Risk of accident caused by incorrect wheel and tyre dimensions

The wheel or tyre size and the tyre type of the emergency spare wheel or spare wheel and the wheel to be replaced may differ. Mounting an emergency spare wheel/spare wheel may severely impair the driving characteristics.

To prevent hazardous situations:

▶ Adapt your driving style accordingly and drive carefully.

▶ Never fit more than one emergency spare wheel or spare wheel that differs in size.

▶ Only use an emergency spare wheel or spare wheel of a different size briefly.

▶ Do not switch off ESP®.

▶ Have the emergency spare wheel or spare wheel of a different size replaced at the nearest qualified specialist workshop. The new wheel must have the correct dimensions.

Check the tyre pressure of the emergency spare wheel fitted. Correct the pressure as necessary.

The maximum permissible speed with an emergency spare wheel fitted is 80 km/h.

Do not fit the emergency spare wheel with snow chains.

Replace the emergency spare wheel after six years at the latest, regardless of wear.

ⓘ **Vehicles with a tyre pressure loss warning system:** If an emergency spare wheel is fitted the tyre pressure loss warning system cannot function reliably. Only restart the system again when the emergency spare wheel has been replaced with a new wheel.

Vehicles with a tyre pressure monitoring system: If an emergency spare wheel is fitted the tyre pressure monitoring system cannot function reliably. Only restart the system again when the emergency spare wheel has been replaced with a new wheel.
Vehicles with a tyre pressure monitoring system: For a few minutes after an emergency spare wheel is fitted, the system may still display the tyre pressure of the removed wheel.

Be sure to also observe the following further related subjects:

- Notes on tyre pressure (→ page 409)
- Tyre pressure table (→ page 410)

Removing the emergency spare wheel

The emergency spare wheel is secured in the emergency spare wheel bag in the load compartment.

▶ Observe the information on mounting tyres (→ page 418).
▶ Open the tailgate.
▶ Detach the fastening straps.
▶ Unhook the retaining spring hooks of the fastening straps from the brackets.
▶ Remove the emergency spare wheel bag with the emergency spare wheel.
▶ Open the emergency spare wheel bag and remove the emergency spare wheel.

Notes on technical data

The technical data was determined in accordance with EU Directives. The data stated only applies to vehicles with standard equipment. You can obtain further information from a Mercedes-Benz Service Centre.

Only for certain countries: you can find vehicle-specific vehicle data in the EC-Certificate of Conformity (CERTIFICATE OF CONFORMITY). These documents are delivered with your vehicle.

On-board electronics

Notes on tampering with the engine electronics

NOTE Premature wear through improper maintenance

Improper maintenance may cause vehicle components to wear more quickly and the vehicle's operating permit may be invalidated.

▶ Always have work on the engine electronics and related components carried out at a qualified specialist workshop.

Two-way radios

Notes on installing two-way radios

WARNING Risk of accident due to improper work on two-way radios

The electromagnetic radiation from two-way radios can interfere with the on-board electronics if RF transmitters are manipulated or retrofitted incorrectly.

This could jeopardise the operating safety of the vehicle.

▶ You should have all work on electrical and electronic components carried out at a qualified specialist workshop.

WARNING Risk of accident from incorrect operation of two-way radios

If you operate two-way radios incorrectly in the vehicle, the electromagnetic radiation could interfere with the on-board electronics, e.g.:

- if the two-way radio is not connected to an exterior aerial
- if the exterior aerial is not correctly mounted or is not of low reflection

This could jeopardise the operating safety of the vehicle.

▶ Have the low-reflection exterior aerial fitted at a qualified specialist workshop.

▶ When operating two-way radios in the vehicle, always connect them to the low-reflection exterior aerial.

NOTE Invalidation of the operating permit due to failure to comply with the instructions for installation and use

The operating permit may be invalidated if the instructions for installation and use of two-way radios are not observed.

- Only use approved frequency bands.
- Observe the maximum permissible output power in these frequency bands.
- Only use approved aerial positions.

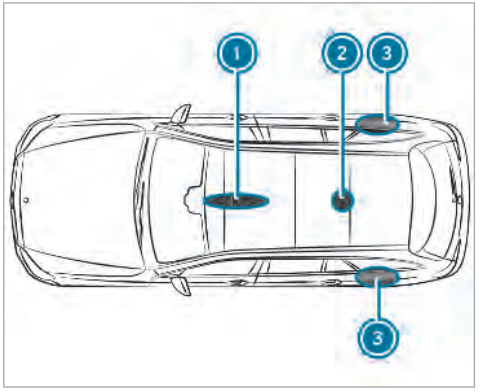

1. Front roof area
2. Rear roof area
3. Rear wing

On vehicles with a panoramic sliding sunroof, installing an aerial to the front or rear roof area is not permitted.

On the rear wings, it is recommended that you install the aerial on the side of the vehicle closest to the centre of the road.

Use Technical Specification ISO/TS 21609 (Road Vehicles – "EMCs for installation of aftermarket radio frequency transmitting equipment") when retrofitting two-way radios. Comply with the legal requirements for detachable parts.

If your vehicle has fittings for two-way radio equipment, use the power supply or aerial connectors intended for use with the basic wiring. Be sure to observe the manufacturer's Supplements when installing.

Two-way radio transmission output

The maximum transmission output (PEAK) at the base of the aerial must not exceed the values in the following table:

frequency band and maximum transmission output

Frequency band	Maximum transmission output
Short wave 3 - 54 MHz	100 W
4 m frequency band 74 - 88 MHz	30 W
2 m frequency band 144 - 174 MHz	50 W
Trunked radio system/Tetra 380 - 460 MHz	10 W
70 cm frequency band 420 - 450 MHz	35 W
Two-way radio (2G/3G/4G)	10 W

The following can be used in the vehicle without restrictions:

- two-way radios with a maximum transmission output of up to 100 mW
- two-way radios with transmitter frequencies in the 380 - 410 MHz frequency band and a maximum transmission output of up to 2 W (trunked radio system/Tetra)
- mobile phones (2G/3G/4G)

There are no restrictions when positioning the aerial on the outside of the vehicle for the following frequency bands:

- trunked radio system/Tetra
- 70 cm frequency band
- 2G/3G/4G

Vehicle identification plate, VIN and engine number

Vehicle identification plate

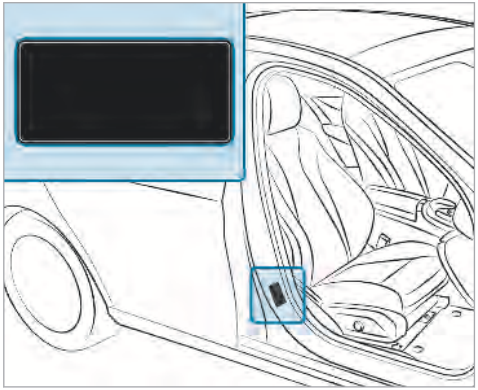

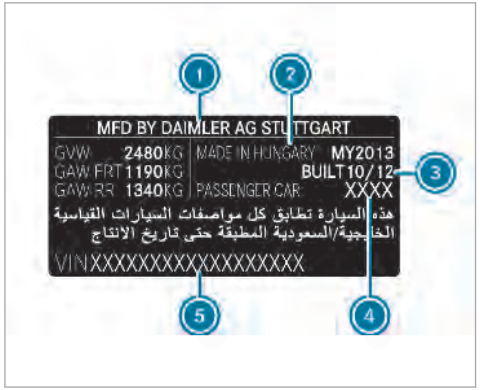

Vehicle identification plate (example: Kuwait)

1. Vehicle manufacturer
2. Place of manufacture
3. Manufacturing date
4. Vehicle model
5. VIN

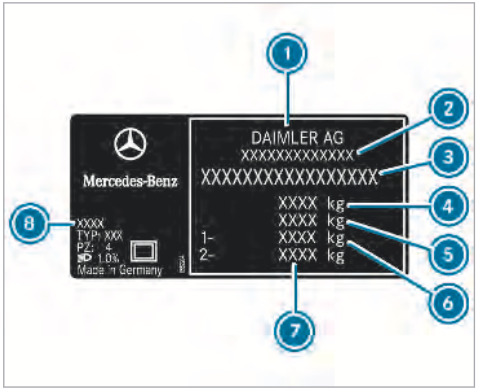

Vehicle identification plate (example: all other countries)

1. Vehicle manufacturer
2. EU general operating permit number (only for certain countries)
3. VIN (vehicle identification number)
4. Permissible gross mass (kg)
5. Permissible gross mass of vehicle combination (kg) (only for specific countries)
6. Permissible front axle load (kg)
7. Permissible rear axle load (kg)
8. Paint code

ⓘ The data shown in the illustration is example data.

VIN and engine number

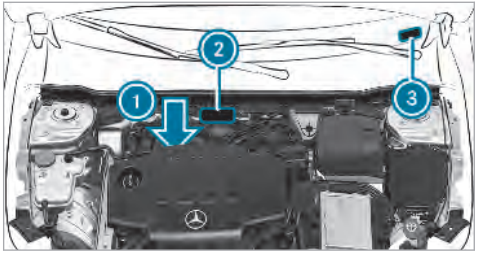

1. Engine number stamped into the crankcase
2. VIN (vehicle identification number) stamped into the crossmember
3. VIN (vehicle identification number) at the lower edge of the windscreen

The VIN at the lower edge of the windscreen ③ is only available in some countries. You can obtain further information from any qualified specialist workshop.

Operating fluids

Notes on operating fluids

WARNING Risk of injury from operating fluids harmful to your health

Operating fluids may be poisonous and harmful to your health.

- Observe the text on the original containers when using, storing or disposing of operating fluids.
- Always store operating fluids sealed in their original containers.
- Always keep children away from operating fluids.

ENVIRONMENTAL NOTE Environmental pollution caused by environmentally irresponsible disposal

- Dispose of operating fluids in an environmentally responsible manner.

Operating fluids include the following:

- fuels
- exhaust gas aftertreatment additives, e.g. AdBlue®
- lubricants
- coolant
- brake fluid
- windscreen washer fluid
- climate control system refrigerant

Only use products approved by Mercedes-Benz. Damage caused by the use of products that have not been approved is not covered by the Mercedes-Benz warranty or goodwill gestures.

You can identify operating fluids approved by Mercedes-Benz by the following inscription on the containers:

- MB-Freigabe (e.g. MB-Freigabe 229.51)
- MB-Approval (e.g. MB-Approval 229.51)

Further information on approved operating fluids:

- in the Mercedes-Benz Specifications for operating fluids at http://bevo.mercedes-benz.com (by entering the designation)
- in the Mercedes-Benz Specifications for Operating Fluids in the Mercedes-Benz BeVo app (by entering the designation)
- at a qualified specialist workshop

WARNING Risk of fire or explosion from fuel

Fuels are highly flammable.

- Fire, naked flames, smoking and creating sparks must be avoided.
- Switch off the ignition and, if it has been in use, switch off the stationary heater before you refuel your vehicle.

WARNING Risk of injury from fuel

Fuels are poisonous and harmful to your health

- Do not swallow fuel or let it come into contact with skin, eyes or clothing.
- Do not inhale fuel vapour.
- Keep children away from fuel.

If you or other people come into contact with fuel, observe the following:

- Immediately rinse fuel off your skin with soap and water.
- If fuel comes into contact with your eyes, immediately rinse them thoroughly with clean water. Seek medical attention immediately.
- If you swallow fuel, seek medical attention immediately. Do not induce vomiting.
- Change immediately out of clothing that has come into contact with fuel.

Fuel

Information on fuel grades for vehicles with petrol engines

Observe the notes on operating fluids (→ page 433).

NOTE Damage caused by the wrong fuel

Even small amounts of the wrong fuel could result in damage to the fuel system, the engine and the emission control system.

- Only refuel using unleaded fuel that conforms to EN 228, or an equivalent specification.

Fuel of this specification may contain up to 10 % ethanol. Your vehicle is suitable for use with E10 fuel.

Do not refuel using:

- diesel
- E85, E100
- petrol containing methanol (M15, M30, M85, M100)
- petrol with additives containing metal

If you accidentally refuel with the wrong fuel:

- do not switch the ignition on.
- consult a qualified specialist workshop.

If the available fuel is not sufficiently low in sulphur, this can produce unpleasant odours.

The recommended octane number for your vehicle can be found on the instruction label in the fuel filler flap (→ page 154).

As a temporary measure, if the recommended fuel is not available, you may also use regular unleaded petrol with at least 91 RON. This may reduce engine output and increase fuel consumption.

Never refuel using petrol with a lower RON.

Further information on fuel can be found:

- at a filling station
- at a qualified specialist workshop

Information on additives in petrol

Observe the notes on service products (→ page 433).

NOTE Damage caused by non-approved additives

Even small amounts of the wrong additive may lead to malfunctions occurring.

▶ Only add cleaning additives recommended by Mercedes-Benz to the fuel.

Mercedes-Benz recommends that you use brand-name fuels with additives.

The fuel grade available in some countries may not be sufficient. Residue could build up in the fuel injection system as a result. In this case, in consultation with a Mercedes-Benz Service Centre, the fuel may be mixed with the cleaning additive recommended by Mercedes-Benz. Be sure to observe the notes and mixing ratios specified on the container.

Information on fuel grades for vehicles with a diesel engine

General notes

Observe the notes on operating fluids (→ page 433).

WARNING Risk of fire through fuel mixture

If you mix diesel fuel with petrol, the flash point of the fuel mixture is lower than that of pure diesel fuel.

While the engine is running, component parts in the exhaust system may overheat unnoticed.

▶ Never refuel using petrol.

▶ Never mix diesel fuel with petrol.

NOTE Damage caused by the wrong fuel

Even small amounts of the wrong fuel could result in damage to the fuel system, the engine and the emission control system.

▶ Only refuel using diesel fuel that conforms to EN 590, or an equivalent specification.

▶ **Vehicles with diesel particulate filters:** in countries outside the EU, only use low-sulphur Euro diesel with a sulphur content of under 50 ppm.

Do not use the following:

- petrol
- marine diesel
- heating oil
- bio-diesel
- vegetable oil
- paraffin
- kerosene

Information on low outside temperatures

Refuel your vehicle with as much winter diesel fuel as possible at the beginning of winter.

Before changing over to winter diesel fuel, the fuel tank should be empty, if possible. When refuelling with winter diesel fuel for the first time, keep the fuel level low, for example at reserve level. The fuel tank can be filled as usual when next refuelling.

Further information on fuel can be found:

- at a filling station
- at a qualified specialist workshop

Tank content and fuel reserve
The total capacity of the fuel tank may vary, depending on the vehicle equipment.

Capacity

Model	Total capacity
A 250	43.0 l or 51.0 l
All other models	43.0 l
Model	**of which reserve fuel**
All models	5.0 l

Adblue®

Notes on AdBlue®
Observe the notes on operating fluids (→ page 433).

AdBlue® is a water-soluble fluid for the exhaust gas aftertreatment of diesel engines.

! NOTE Damage caused by mixing additives with AdBlue® or from diluting AdBlue®

The BlueTEC exhaust gas aftertreatment system could be destroyed by:

- Additives in AdBlue®
- Diluting AdBlue®

▶ Only use AdBlue® in accordance with ISO 22241.
▶ Do not add additives.
▶ Do not dilute AdBlue®.

! NOTE Damage and malfunctions due to impurities in AdBlue®

Impurities in AdBlue® lead to:

- Increased emissions values
- Damage to the catalytic converter
- Engine damage
- BlueTEC exhaust gas aftertreatment malfunctions

▶ Avoid impurities in AdBlue®.

ENVIRONMENTAL NOTE Contamination caused by AdBlue®

AdBlue® residues crystallise after a period of time, and contaminate the surfaces with which they come into contact.

▶ Surfaces that have come into contact with AdBlue® while refilling must be immediately rinsed with water, or AdBlue® must be removed with a damp cloth and cold water.

If AdBlue® has already crystallised, clean it with a sponge and cold water.

When you open the AdBlue® tank, small amounts of ammonia vapour may escape. Do not inhale any ammonia vapours that may be released. Only fill the AdBlue® tank in well-ventilated areas.

AdBlue® capacity
Missing values were not available at the time of going to press.

Total capacity of AdBlue® tank

Model	Total capacity
All models	23.8 l

Engine oil

Notes on engine oil
Observe the notes on service products (→ page 433).

NOTE Engine damage caused by an incorrect oil filter, incorrect oil or additives

- Do not use engine oils or oil filters which do not correspond to the specifications explicitly prescribed for the service intervals.
- Do not alter the engine oil or oil filter in order to achieve longer change intervals than prescribed.
- Do not use additives.
- Have the engine oil renewed at regular intervals.

Mercedes-Benz recommends that you have the oil change carried out at a qualified specialist workshop.

Only Mercedes-Benz approved engine oils may be used in Mercedes-Benz engines.

Further information on engine oils and oil filters:

- in the Mercedes-Benz Specifications for Service Products at http://bevo.mercedes-benz.com (by entering the designation)
- at a qualified specialist workshop

Petrol engines: for certain countries, different engine oils can be used in conjunction with reduced maintenance intervals.

ⓘ Further information on different engine oils can be obtained at a qualified specialist workshop.

Quality and capacity of engine oil

MB-Freigabe or MB-Approval

Petrol engines	MB-Freigabe or MB-Approval
All models	229.51, 229.52, 229.61, 229.71

MB-Freigabe or MB-Approval

Diesel engines	MB-Freigabe or MB-Approval
All models	226.51, 229.31, 229.51, 229.52, 229.61, 229.71

If the engine oils listed in the table are not available, you may add a maximum of 1.0 l of the following engine oils once only:

- **petrol engines:** MB-Freigabe or MB-Approval 229.31 or ACEA C3
- **diesel engines:** ACEA C3

The following values refer to an oil change, including the oil filter.

Replacement amount

Model	Replacement amount
A 180 d	5.5 l
All other models	5.1 l

Notes on brake fluid

Observe the notes on operating fluids (→ page 433).

WARNING Risk of an accident due to vapour pockets forming in the brake system

The brake fluid constantly absorbs moisture from the air. This lowers the boiling point of the brake fluid. If the boiling point is too low, vapour pockets may form in the brake system when the brakes are applied hard.

This impairs the braking effect.

▶ Have the brake fluid renewed at the specified intervals.

Have the brake fluid regularly changed at a qualified specialist workshop.
Only use brake fluid approved by Mercedes-Benz according to MB-Freigabe or MB-Approval 331.0.

Further information on brake fluid:

- in the Mercedes-Benz Specifications for Operating Fluids at http://bevo.mercedes-benz.com
- at a qualified specialist workshop

Coolant

Notes on coolant

Observe the notes on service products (→ page 433).

WARNING Risk of fire- and injury from antifreeze

If antifreeze comes into contact with hot component parts in the engine compartment, it may ignite.

▶ Allow the engine to cool down before you top up the antifreeze.

▶ Make sure that no antifreeze spills out next to the filler opening.

▶ Thoroughly clean the antifreeze from component parts before starting the vehicle.

NOTE Damage caused by incorrect coolant

▶ Only add coolant that has been premixed with the required antifreeze protection.

Further information on coolant:

- In the Mercedes-Benz Specifications for Operating Fluids 310.1, e.g. online at http://bevo.mercedes-benz.com.
- At a qualified specialist workshop.

NOTE Overheating at high outside temperatures

If an inappropriate coolant is used, the engine cooling system is not sufficiently protected against overheating and corrosion at high outside temperatures.

▶ Always use coolant approved by Mercedes-Benz.

▶ Observe the instructions in the Mercedes-Benz Specifications for Operating Fluids 310.1.

Have the coolant regularly replaced at a qualified specialist workshop.

The proportion of corrosion inhibitor/antifreeze concentrate in the engine cooling system should be:

- a minimum of 50% (antifreeze protection down to approximately -37 °C).
- a maximum of 55% (antifreeze protection down to -45 °C).

Notes on windscreen washer fluid

Observe the notes on service products (→ page 433).

WARNING - Risk of fire and injury due to windscreen washer concentrate

Windscreen washer concentrate is highly flammable. It could ignite if it comes into contact with hot engine component parts or the exhaust system.

▶ Make sure that no windscreen washer concentrate spills out next to the filler opening.

NOTE Damage to the exterior lighting due to unsuitable windscreen washer fluid

Unsuitable windscreen washer fluids may damage the plastic surface of the exterior lighting.

▶ Only use windscreen washer fluids which are also suitable for use on plastic surfaces, e.g. MB SummerFit or MB WinterFit.

NOTE Blocked spray nozzles caused by mixing windscreen washer fluids

▶ Do not mix MB SummerFit and MB WinterFit with other windscreen washer fluids.

Do not use distilled or de-ionised water as the fill level sensor may be triggered erroneously.

Recommended windscreen washer fluid:

- Above freezing point: e.g. MB SummerFit
- Below freezing point: e.g. MB WinterFit

For the correct mixing ratio, refer to the information on the antifreeze container.

Mix the washer fluid with the windscreen washer fluid all year round.

Vehicle data

Vehicle dimensions

The heights specified may vary as a result of the:

- tyres
- load
- condition of the suspension
- optional equipment

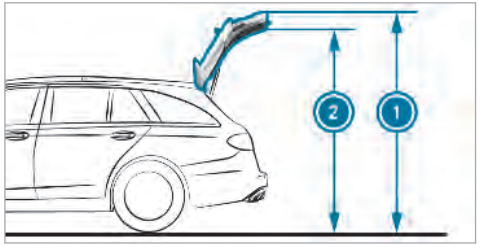

Height when opened and headroom

Model	1 Height when opened	2 Headroom
A 250	2002 mm	1857 mm
All other models	1997 mm	1852 mm

Vehicle dimensions

All models	
Vehicle length	4419 mm
Vehicle width including outside mirrors	1992 mm
Vehicle width excluding outside mirrors	1796 mm
Wheelbase	2729 mm

Vehicle height

Model	
A 250	1445 mm
All other models	1440 mm

Weights and loads

Please note that for the specified vehicle data:

- items of optional equipment increase the unladen weight and reduce the payload.
- vehicle-specific weight information can be found on the vehicle identification plate .

Roof load

All models	
Maximum roof load	100 kg

Trailer hitch

General notes on the trailer hitch

Not all models can be used to tow a trailer (→ page 221).

Modifications to the engine cooling system may be necessary, depending on the vehicle model. The retrofitting of a trailer hitch is only permissible if a towing capacity is specified in your vehicle documents.

Further information can be obtained at a qualified specialist workshop.

Mounting dimensions

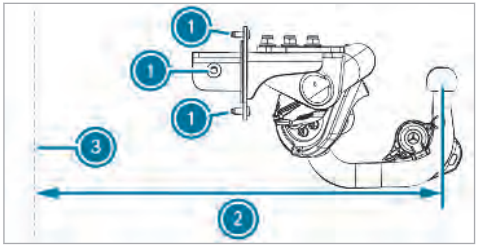

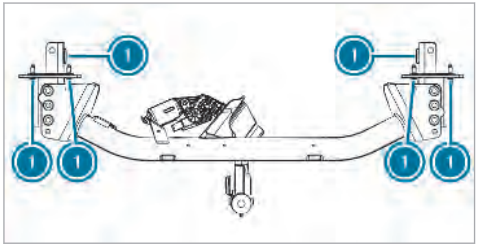

1 Fastening point
2 Overhang dimension
3 Rear axle centre line

The overhang dimension and fastening points are valid for a trailer hitch installed at the factory.

Missing values were not available at the time of going to press.

Model	2 Overhang dimension
All models	

Permissible towing capacity

The tongue weight is not included in the towing capacity.

Permissible towing capacity, braked (at a minimum start-off gradeability of 8 %)

Model	Permissible towing capacity, braked
A 180 d	1600 kg
All other models	1800 kg

Permissible towing capacity, braked (at a minimum start-off gradeability of 12 %)

Model	Permissible towing capacity, braked
A 180 d	1400 kg
All other models	1600 kg

Permissible towing capacity, unbraked

Model	Permissible towing capacity, unbraked
A 180 d	705 kg
A 200	680 kg
A 250	720 kg

Maximum tongue weight

NOTE Damage caused by the trailer coming loose

If the tongue weight used is too low, the trailer may come loose.

- The tongue weight must not be below 50 kg.
- Use a tongue weight that is as close as possible to the maximum permissible tongue weight.

Maximum tongue weight

Model	
All models	80 kg

Permissible rear axle load during trailer operation

Axle load

Model	Axle load
A 180 d	970 kg
A 200	976 kg
A 250	986 kg

Display messages

Introduction

Notes on display messages

Display messages appear on the multifunction display.

Display messages with graphic symbols are simplified in the Owner's Manual and may differ from the symbols on the multifunction display. The multifunction display shows high-priority display messages in red. Certain display messages are accompanied by a warning tone.

Please respond in accordance with the display messages and follow the additional notes in this Owner's Manual.

For some display messages, a symbol is also shown:

- [i] Further information
- [⊠] Hide display message

You can select the desired symbol by swiping left or right on the left-hand touch control. Press the [i] symbol to show further information on the multifunction display. Press the [⊠] symbol to hide the display message.

You can hide low-priority display messages by pressing the [⌂⇦] button or the left-hand touch control. The display messages are then stored in the message memory.

Rectify the cause of a display message as quickly as possible.

High-priority display messages cannot be hidden. The multifunction display shows these display messages continuously until the cause of the message has been rectified.

Calling up stored display messages

On-board computer:

→ Service ▸▸ 1 message

If there are no display messages, No messages appears on the multifunction display.

▶ Scroll through the display messages by swiping upwards or downwards on the left-hand touch control.

▶ **To exit the message memory:** press the [⌂⇦] button.

Safety systems

Display messages	Possible causes/consequences and ▶ Solutions
 inoperative See Owner's Manual	* ABS and ESP® are malfunctioning. Other driving and driving safety systems may also be malfunctioning. The brake system continues to operate normally. The braking distance may increase in an emergency braking situation. ⚠ **WARNING** Risk of skidding if ABS and ESP® are malfunctioning If ABS and ESP® are malfunctioning, the wheels could lock when braking and ESP® cannot carry out vehicle stabilisation. The steering capability and braking characteristics are thus severely impaired. The braking distance may increase in an emergency braking situation. In addition, other driving safety systems are switched off. ▶ Drive on carefully. ▶ Have ABS and ESP® checked immediately at a qualified specialist workshop. ▶ Drive on carefully. ▶ Consult a qualified specialist workshop immediately.

Display messages	Possible causes/consequences and ▶ Solutions
 currently unavailable See Owner's Manual	* ABS and ESP® are temporarily unavailable. Other driving systems and driving safety systems may also be temporarily unavailable. The brake system continues to operate normally. The braking distance may increase in an emergency braking situation. ⚠ **WARNING** Risk of skidding if ABS and ESP® are malfunctioning If ABS and ESP® are malfunctioning, the wheels could lock when braking and ESP® cannot carry out vehicle stabilisation. The steering capability and braking characteristics are thus severely impaired. The braking distance may increase in an emergency braking situation. In addition, other driving safety systems are switched off. ▶ Drive on carefully. ▶ Have ABS and ESP® checked immediately at a qualified specialist workshop. ▶ Drive carefully on a suitable stretch of road, making slight steering movements at a speed above 30 km/h. ▶ If the display message does not disappear, consult a qualified specialist workshop immediately. Drive carefully.

Display messages	Possible causes/consequences and ▶ Solutions
currently unavailable See Owner's Manual	* ESP® is temporarily unavailable. Other driving and driving safety systems may also be malfunctioning. ⚠ **WARNING** Risk of skidding if ESP® is malfunctioning If ESP® is malfunctioning, ESP® cannot carry out vehicle stabilisation. In addition, other driving safety systems are switched off. ▶ Drive on carefully. ▶ Have ESP® checked at a qualified specialist workshop. ▶ Carefully drive on a suitable stretch of road, making slight steering movements at a speed above 30 km/h. ▶ If the display message does not disappear, consult a qualified specialist workshop immediately. Drive carefully.

Display messages	Possible causes/consequences and ▶ Solutions
inoperative See Owner's Manual	* ESP® is malfunctioning. Other driving and driving safety systems may also be malfunctioning. The brake system continues to operate normally. The braking distance may increase in an emergency braking situation. ⚠ **WARNING** Risk of skidding if ESP® is malfunctioning If ESP® is malfunctioning, ESP® cannot carry out vehicle stabilisation. In addition, other driving safety systems are switched off. ▶ Drive on carefully. ▶ Have ESP® checked at a qualified specialist workshop. ▶ Drive on carefully. ▶ Consult a qualified specialist workshop immediately.

Display messages	Possible causes/consequences and ▶ Solutions
EBD ABS inoperative See Owner's Manual	* EBD, ABS and ESP® are malfunctioning. Other driving and driving safety systems may also be malfunctioning. **⚠ WARNING** Risk of skidding if EBD, ABS and ESP® are malfunctioning If EBD, ABS and ESP® are malfunctioning, the wheels can lock when braking and ESP® cannot carry out vehicle stabilisation. The steering capability and braking characteristics are thus severely impaired. The braking distance may increase in an emergency braking situation. In addition, other driving safety systems are switched off. ▶ Drive on carefully. ▶ Have the brake system checked immediately at a qualified specialist workshop. ▶ Drive on carefully. ▶ Consult a qualified specialist workshop immediately.
Turn on the ignition to release the parking brake	* The red (P) indicator lamp is lit. You have attempted to release the electric parking brake with the ignition switched off. ▶ Switch the ignition on.

Display messages	Possible causes/consequences and ▶ Solutions
Release parking brake	* The red (P) indicator lamp flashes. The electric parking brake is applied while you are driving: • A condition for automatic release of the electric parking brake is not fulfilled . • You are performing emergency braking using the electric parking brake . ▶ Check that the conditions for automatic release of the electric parking brake are fulfilled. ▶ Release the electric parking brake manually.

Display messages	Possible causes/consequences and ▶ Solutions
 Parking brake See Owner's Manual	* The yellow (P) indicator lamp is lit. The electric parking brake is malfunctioning. **To apply:** ▶ Switch off the ignition and switch it back on. ▶ Apply the electric parking brake manually . If it is not possible to apply the electric parking brake: ▶ Consult a qualified specialist workshop. ▶ Where necessary, also safeguard the parked vehicle against rolling away. The yellow (P) indicator lamp and the red (P) indicator lamp are lit. The electric parking brake is malfunctioning. **To release:** ▶ Switch off the ignition and switch it back on. ▶ Release the electric parking brake manually . or ▶ Release the electric parking brake automatically . If it is still not possible to release the electric parking brake: ▶ Do not continue driving under any circumstances. Consult a qualified specialist workshop. The yellow (P) indicator lamp is lit and the red (P) indicator lamp is flashing. The electric parking brake is malfunctioning. The electric parking brake could not be applied or released.

Display messages	Possible causes/consequences and ▶ Solutions
	▶ Switch off the ignition and switch it back on. **To apply:** ▶ Release and then apply the electric parking brake manually . **To release:** ▶ Apply and then release the electric parking brake manually. If it is not possible to apply the electric parking brake or the red (P) indicator lamp continues to flash: ▶ Do not continue driving under any circumstances. Consult a qualified specialist workshop. ▶ Where necessary, also safeguard the parked vehicle against rolling away. The yellow (P) indicator lamp is lit and the red (P) indicator lamp flashes for approximately ten seconds after the electric parking brake has been applied or released. It then remains lit or goes out. The electric parking brake is malfunctioning. **If the battery charge level is too low:** ▶ Charge the battery. **To apply:** ▶ Switch off the ignition. The electric parking brake is applied automatically.

Display messages	Possible causes/consequences and ▶ Solutions
	If the electric parking brake should not be applied, e.g. when washing the vehicle in an automatic car wash or when having the vehicle towed, leave the ignition switched on. Do not do this when having the vehicle towed with the rear axle raised. If the electric parking brake is not applied automatically: ▶ Switch off the ignition and switch it back on. ▶ Release and then apply the electric parking brake manually . If it is still not possible to apply the electric parking brake: ▶ Consult a qualified specialist workshop. ▶ Where necessary, also safeguard the parked vehicle against rolling away. **To release:** ▶ If the conditions for automatic release are fulfilled and the electric parking brake is not released automatically, release the electric parking brake manually . If it is still not possible to release the electric parking brake: ▶ Do not continue driving under any circumstances. Consult a qualified specialist workshop.

Display messages	Possible causes/consequences and ▶ Solutions
 Check brake fluid level	* There is insufficient brake fluid in the brake fluid reservoir. ⚠ **WARNING** Risk of an accident due to low brake fluid level If the brake fluid level is too low, the braking effect and the braking characteristics may be impaired. ▶ Pull over and stop the vehicle safely as soon as possible, paying attention to road and traffic conditions. Do not continue driving under any circumstances. ▶ Consult a qualified specialist workshop. Do not top up the brake fluid. ▶ Pull over and stop the vehicle safely as soon as possible, paying attention to road and traffic conditions. Do not continue driving under any circumstances. ▶ Consult a qualified specialist workshop. Do not top up the brake fluid.
 Check brake pad wear	* The brake pads have reached the wear limit. ▶ Consult a qualified specialist workshop.
 Inoperative	* At least one of the main functions of the Mercedes me connect system is malfunctioning. ▶ Consult a qualified specialist workshop.

Display messages	Possible causes/consequences and ▶ Solutions
Mercedes me connect Services limited See Owner's Manual	* Service limited. At least one of the main functions of the Mercedes me connect system is malfunctioning. ▶ Observe the notes on the diagnostics connection . ▶ Consult a qualified specialist workshop.
Active Brake Assist Functions limited See Owner's Manual	* **Vehicles with Driving Assistance Package:** Active Brake Assist with cross-traffic function, Evasive Steering Assist or PRE-SAFE® PLUS is malfunctioning. **Vehicles without Driving Assistance Package:** Active Brake Assist is malfunctioning. ▶ Consult a qualified specialist workshop.
Active Brake Assist Functions currently limited See Owner's Manual	* **Vehicles with the Driving Assistance Package:** Active Brake Assist with cross-traffic function, Evasive Steering Assist or PRE-SAFE® PLUS are temporarily unavailable or only partially available. **Vehicles without the Driving Assistance package:** Active Brake Assist is temporarily unavailable. The ambient conditions are outside the system borders . ▶ Drive on. As soon as the ambient conditions are within the system borders, the system will become available again. ▶ If the display message does not disappear, stop the vehicle while paying attention to road and traffic conditions and restart the engine.
PRE-SAFE inoperative See Owner's Manual	* PRE-SAFE® functions are malfunctioning. ▶ Consult a qualified specialist workshop.

Display messages	Possible causes/consequences and ▶ Solutions
 Restraint sys. malfunction Consult workshop	* The restraint system is faulty . ⚠ **WARNING** Risk of injury or fatal injury due to a malfunction in the restraint system If the restraint system is malfunctioning, restraint system components may be triggered unintentionally or might not be triggered at all in the event of an accident. This may affect the seat belt tensioner or airbag, for example. ▶ Have the restraint system checked and repaired immediately at a qualified specialist workshop. Detection of a restraint system malfunction: • the restraint system warning lamp does not light up when the ignition is switched on. • the restraint system warning lamp lights up continuously or repeatedly during a journey. ▶ Consult a qualified specialist workshop immediately.

Display messages	Possible causes/consequences and ▶ Solutions
 Front left malfunction Consult workshop (example)	* The corresponding restraint system is malfunctioning . **⚠ WARNING** Risk of injury or fatal injury due to a malfunction in the restraint system If the restraint system is malfunctioning, restraint system components may be triggered unintentionally or might not be triggered at all in the event of an accident. This may affect the seat belt tensioner or airbag, for example. ▶ Have the restraint system checked and repaired immediately at a qualified specialist workshop. Detection of a restraint system malfunction: • the restraint system warning lamp does not light up when the ignition is switched on. • the restraint system warning lamp lights up continuously or repeatedly during a journey. ▶ Consult a qualified specialist workshop immediately.
 Left windowbag malfunction Consult workshop (example)	* The corresponding windowbag is malfunctioning . **⚠ WARNING** Risk of injury or fatal injury due to a malfunction in the window airbag The window airbag might be triggered unintentionally or might not be triggered at all in the event of an accident with high deceleration. ▶ Have the window airbag checked and repaired immediately at a qualified specialist workshop. ▶ Consult a qualified specialist workshop immediately.

Display messages	Possible causes/consequences and ▶ Solutions
Front-passenger airbag disabled See Owner's Manual	* The front passenger airbag is disabled, even though an adult or a person with a build corresponding to that of an adult is seated on the front passenger seat. If additional forces are applied to the seat, the weight the system detects may be too low. ⚠ **WARNING** - Risk of injury or even fatal injury when the front passenger airbag is disabled If the front passenger airbag is disabled, It will not be deployed in the event of an accident and cannot perform its intended protective function. A person in the front passenger seat could then, for example, come into contact with the vehicle interior, especially if the person is sitting too close to the dashboard. ▶ Be aware of the status of the front passenger airbag both before and during the journey. ▶ Pull over and stop the vehicle safely as soon as possible, paying attention to road and traffic conditions. ▶ Check the status of the automatic front passenger airbag shutoff . ▶ If necessary, consult a qualified specialist workshop immediately.

Display messages	Possible causes/consequences and ▶ Solutions
Front-passenger airbag enabled See Owner's Manual	* The front passenger airbag is enabled while the vehicle is in motion: • even when a child, a small adult or an object weighing less than the system weight threshold is located on the front passenger seat • even when the front passenger seat is not occupied The system may detect objects or forces that are adding to the weight applied to the seat. ⚠ **WARNING** Risk of injury or fatal injury when using a child restraint system while the front passenger airbag is enabled If you secure a child in a child restraint system on the front passenger seat and the front passenger airbag is enabled, the front passenger airbag can deploy in the event of an accident. The child could be struck by the airbag. ▶ Ensure, both before and during the journey, that the status of the front passenger airbag is correct. NEVER use a rearward facing child restraint on a seat protected by an ACTIVE FRONT AIRBAG in front of it; DEATH or SERIOUS INJURY to the CHILD can occur. ▶ Pull over and stop the vehicle safely as soon as possible, paying attention to road and traffic conditions. ▶ Check the status of the automatic front passenger airbag shutoff . ▶ If necessary, consult a qualified specialist workshop immediately.

Driving systems

Display messages	Possible causes/consequences and ▶ Solutions
ATTENTION ASSIST: Take a break!	* ATTENTION ASSIST has detected fatigue or an increasing lack of concentration on the part of the driver (→ page 211). ▶ If necessary, take a break.
ATTENTION ASSIST inoperative	* ATTENTION ASSIST is malfunctioning. ▶ Consult a qualified specialist workshop.
Active Lane Keeping Assist currently unavailable See Owner's Manual	* Active Lane Keeping Assist is temporarily unavailable. The ambient conditions are outside the system borders (→ page 219). ▶ Drive on. As soon as the ambient conditions are within the system borders, the system will become available again.
Active Lane Keeping Assist inoperative	* Active Lane Keeping Assist is malfunctioning. ▶ Consult a qualified specialist workshop.

Display messages	Possible causes/consequences and ▶ Solutions
Blind Spot Assist currently unavailable See Owner's Manual	* Blind Spot Assist is temporarily unavailable. The system borders have been reached (→ page 216). ▶ Drive on. Once the cause of the problem is no longer present, the system will be available again. or ▶ If the display message does not disappear, stop the vehicle while paying attention to road and traffic conditions and restart the engine. ▶ If necessary, clean the rear bumper. If the bumper is extremely dirty, the sensors in the bumper may be malfunctioning.
Active Blind Spot Assist currently unavailable See Owner's Manual	* Active Blind Spot Assist is temporarily unavailable. The system borders have been reached (→ page 216). ▶ Drive on. Once the cause of the problem is no longer present, the system will be available again. ▶ If the display message does not disappear, stop the vehicle while paying attention to road and traffic conditions and restart the engine.
Blind Spot Assist not available when towing a trailer See Owner's Manual	* When you establish the electrical connection to the trailer, Blind Spot Assist is unavailable. ▶ Press the left-hand touch control and acknowledge the display message.

Display messages	Possible causes/consequences and ▶ Solutions
Active Blind Spot Assist not available when towing a trailer See Owner's Manual	* When you establish the electrical connection to the trailer, Active Blind Spot Assist is unavailable. ▶ Press the left-hand touch control and acknowledge the display message.
Blind Spot Assist inoperative	* Blind Spot Assist is malfunctioning. ▶ Consult a qualified specialist workshop.
Active Blind Spot Assist inoperative	* Active Blind Spot Assist is malfunctioning. ▶ Consult a qualified specialist workshop.
Active Parking Assist and PARKTRONIC inoperative See Owner's Manual	* Active Parking Assist and Parking Assist PARKTRONIC are malfunctioning. ▶ Stop the vehicle, paying attention to road and traffic conditions, and restart the engine. ▶ If the display message continues to be displayed, consult a qualified specialist workshop.
Traffic Sign Assist currently unavailable See Owner's Manual	* Traffic Sign Assist is temporarily unavailable. ▶ Drive on. Once the cause of the problem is no longer present, the system will be available again.
Traffic Sign Assist inoperative	* Traffic Sign Assist is malfunctioning. ▶ Consult a qualified specialist workshop.

Display messages	Possible causes/consequences and ▶ Solutions
HOLD Off	* The HOLD function is deactivated because the vehicle is skidding or a condition for activation is not met. ▶ Reactivate the HOLD function later or check the activation conditions for the HOLD function .
Active Distance Assist available again	* Active Distance Assist DISTRONIC is operational again and can be activated (→ page 184).
--- mph	* Active Distance Assist DISTRONIC cannot be activated as not all activation conditions have been fulfilled. ▶ Comply with the activation conditions of Active Distance Assist DISTRONIC .

Display messages	Possible causes/consequences and ▶ Solutions
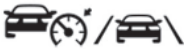 Currently unavailable Radar sensors dirty	* The radar sensor system is malfunctioning. Possible causes: • soiling of the sensors • heavy rain • extended country driving without other traffic, e.g. in the desert Driving systems and driving safety systems may be malfunctioning or temporarily unavailable. Once the cause of the problem is no longer present, driving systems and driving safety systems will become available again. If the display message does not disappear: ▶ Pull over and stop the vehicle safely, paying attention to road and traffic conditions. ▶ Clean all sensors . ▶ Restart the engine.

Display messages	Possible causes/consequences and ▶ Solutions
      Currently unavailable Camera dirty	* The camera view is restricted. Possible causes: • dirt on the windscreen in the camera's field of vision • heavy rain, snow or fog Driving systems and driving safety systems may be malfunctioning or temporarily unavailable. Once the cause of the problem is no longer present, driving systems and driving safety systems will become available again. If the display message does not disappear: ▶ Pull over and stop the vehicle safely, paying attention to road and traffic conditions. ▶ Clean the windscreen.
Active Distance Assist currently unavailable See Owner's Manual	* Active Distance Assist DISTRONIC is temporarily unavailable. The ambient conditions are outside the system borders (→ page 183). ▶ Drive on. As soon as the ambient conditions are within the system borders, the system will become available again.
Active Distance Assist inoperative	* Active Distance Assist DISTRONIC is malfunctioning. Other driving and driving safety systems may also be malfunctioning. ▶ Consult a qualified specialist workshop.

Display messages	Possible causes/consequences and ▶ Solutions
Active Steering Assist currently unavailable See Owner's Manual	* Active Steering Assist is temporarily unavailable. The ambient conditions are outside the system borders (→ page 188). ▶ Drive on. As soon as the ambient conditions are within the system borders, the system will become available again.
Active Steering Assist inoperative	* Active Steering Assist is malfunctioning. Active Distance Assist DISTRONIC remains available. ▶ Consult a qualified specialist workshop.
Limiter passive	* If you depress the accelerator pedal beyond the pressure point (kickdown), the limiter is switched to passive mode (→ page 181).
--- mph	* Cruise control cannot be activated as not all activation conditions are fulfilled. ▶ Observe the activation conditions for cruise control .
Cruise control off	* Cruise control has been deactivated. If there is an additional warning tone, cruise control has been switched off automatically (→ page 179) (→ page 179).

Display messages	Possible causes/consequences and ▶ Solutions
Cruise control inoperative	* Cruise control is malfunctioning. ▶ Consult a qualified specialist workshop.
Cruise control and Limiter inoperative	* Cruise control and the limiter are malfunctioning. ▶ Consult a qualified specialist workshop.
Limiter inoperative	* The limiter is malfunctioning. ▶ Consult a qualified specialist workshop.
LIM --- mph	* The limiter cannot be activated as not all activation conditions have been fulfilled. ▶ Observe the activation conditions of the limiter .
Speed limit (winter tyres) XXX mph	* You have reached the stored maximum speed for winter tyres. It is not possible to exceed this speed.
120 km/h! Maximum speed exceeded	* The maximum permissible speed has been exceeded (only for certain countries). ▶ Drive more slowly.

Engine

Display messages	Possible causes/consequences and ▶ Solutions
Top up coolant See Owner's Manual	* The coolant level is too low. **! NOTE** Engine damage due to insufficient coolant ▶ Avoid long journeys with insufficient coolant. ▶ Add coolant .
 Coolant Stop vehicle Switch engine off	* The coolant is too hot. ▶ Stop the vehicle immediately, paying attention to road and traffic conditions, and switch off the engine. **⚠ WARNING** Danger of burns when opening the bonnet If you open the engine bonnet when the engine has overheated or during a fire in the engine compartment, you could come into contact with hot gases or other escaping operating fluids. ▶ Before opening the bonnet, allow the engine to cool down. ▶ In the event of a fire in the engine compartment, keep the engine bonnet closed and call the fire service. ▶ Wait until the engine has cooled down. ▶ Make sure that the air supply to the radiator is not obstructed. ▶ Avoiding high loads on the engine, drive on to the nearest qualified specialist workshop. In doing so, ensure that the coolant temperature display remains below 120 °C.

Display messages	Possible causes/consequences and ▶ Solutions
 See Owner's Manual	* The battery is not being charged. **! NOTE** Possible engine damage if you continue driving ▶ Do not continue driving under any circumstances. ▶ Consult a qualified specialist workshop. ▶ Stop the vehicle immediately, paying attention to road and traffic conditions, and switch off the engine. ▶ Consult a qualified specialist workshop.
 Start engine See Owner's Manual	* The engine is off and the battery charge level is too low. ▶ Switch off electrical consumers that are not required. ▶ Leave the engine running for a few minutes, or drive for a longer distance. The battery charges.

Display messages	Possible causes/consequences and ▶ Solutions
 Stop vehicle See Owner's Manual	* The battery is no longer being charged and the battery charge level is too low. **NOTE** Possible engine damage if you continue driving ▶ Do not continue driving under any circumstances. ▶ Consult a qualified specialist workshop. ▶ Pull over and stop the vehicle safely as soon as possible, paying attention to road and traffic conditions. Do not continue driving under any circumstances. ▶ Switch off the engine. ▶ Consult a qualified specialist workshop.
 Stop vehicle Leave engine running	* The battery charge level is too low. ▶ Pull over and stop the vehicle safely as soon as possible, paying attention to road and traffic conditions. Do not continue driving under any circumstances. ▶ Leave the engine running. ▶ Wait until the display message disappears before pulling away.

Display messages	Possible causes/consequences and ▶ Solutions
 Check eng. oil lev. when next refuelling	* The engine oil level has dropped to the minimum level. **! NOTE** Engine damage caused by driving with insufficient engine oil ▶ Avoid long journeys with insufficient engine oil. ▶ Check the engine oil level when next refuelling. Top up the engine oil (→ page 378). Notes on engine oil (→ page 437).
 Engine oil level Stop vehicle Switch engine off	* Display message only for certain engines: The engine oil level is too low. **! NOTE** Engine damage caused by driving with insufficient engine oil ▶ Avoid long journeys with insufficient engine oil. ▶ Pull over and stop the vehicle safely as soon as possible, paying attention to road and traffic conditions. Do not continue driving under any circumstances. ▶ Switch off the engine. ▶ Check the engine oil level. Top up the engine oil (→ page 378). Notes on engine oil (→ page 437).

Display messages	Possible causes/consequences and ▶ Solutions
 Engine oil level Reduce oil level	* Display message only for certain engines: The engine oil level is too high. **! NOTE** Engine damage caused by driving with excess engine oil ▶ Avoid long journeys with excess engine oil. ▶ Consult a qualified specialist workshop immediately and have the engine oil siphoned off.
 Add 1 litre engine oil when next refuelling	* Display message only for certain engines: The engine oil level has dropped to the minimum level. **! NOTE** Engine damage caused by driving with insufficient engine oil ▶ Avoid long journeys with insufficient engine oil. ▶ Check the engine oil level when next refuelling. Top up the engine oil (→ page 378). Notes on engine oil (→ page 437).

Display messages	Possible causes/consequences and ▶ Solutions
 Engine oil pressure Stop Switch off engine	* Display message only for certain engines: The engine oil pressure is too low. **! NOTE** Engine damage caused by driving with insufficient engine oil pressure ▶ Avoid long journeys with insufficient engine oil pressure. ▶ Pull over and stop the vehicle safely as soon as possible, paying attention to road and traffic conditions. Do not continue driving under any circumstances. ▶ Consult a qualified specialist workshop.
 Engine oil level cannot be measured	* The electrical connection to the oil level sensor is interrupted or the oil level sensor is faulty. The engine oil level has dropped to the minimum level. ▶ Consult a qualified specialist workshop.
 Clean the fuel filter	* **Vehicles with diesel engines:** the fuel filter is dirty or the water in the fuel filter must be drained off. ▶ Consult a qualified specialist workshop.

Display messages	Possible causes/consequences and ▶ Solutions
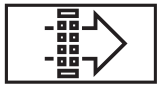 Replace air cleaner	* **Vehicles with diesel engines:** the engine air filter is dirty and must be replaced. ▶ Consult a qualified specialist workshop.
Reserve fuel level	* The fuel supply has dropped into the reserve range. ▶ Refuel.
Antriebssystem Störung Anhalten Motor aus	* The drive system is malfunctioning. ▶ Stop the vehicle immediately, paying attention to road and traffic conditions, and switch off the engine. ▶ Consult a qualified specialist workshop.
Antriebssystem Störung Werkstatt aufsuchen	* The drive system is malfunctioning. ▶ Consult a qualified specialist workshop.
	* The fan motor is defective. ▶ Avoiding high loads on the engine, drive on to the nearest qualified specialist workshop. In doing so, ensure that the coolant temperature display remains below 120 °C.

Display messages	Possible causes/consequences and ▶ Solutions
 Top up AdBlue Perf. reduced in XXX miles See Owner's Manual	* The low AdBlue® level will lead to limited performance after the remaining distance displayed has been driven. ▶ Refill AdBlue® immediately . ⓘ The message disappears after driving at a speed above 15 km/h for approximately one minute.
 Top up AdBlue Perf. reduced: XXX mph No start in XXX miles	* The low AdBlue® level will lead to limited performance as of the speed displayed. After the displayed remaining distance has been covered, it will no longer be possible to start the engine. ▶ Refill AdBlue® immediately.
 AdBlue system fault Perf. reduced: XXX mph No start in XXX miles	* Power reduction due to the AdBlue® system fault. After the distance displayed has been covered, it will no longer be possible to start the engine. ▶ Consult a qualified specialist workshop immediately.

Display messages	Possible causes/consequences and ▶ Solutions
AdBlue system fault Engine start not possible	* The AdBlue® system is malfunctioning. You can no longer start the engine. ▶ Consult a qualified specialist workshop immediately.
AdBlue system fault Perf. reduced in XXX miles See Owner's Manual	* The AdBlue® system is malfunctioning. Performance will be reduced after the remaining distance displayed has been covered. ▶ Consult a qualified specialist workshop immediately.
AdBlue system fault See Owner's Manual	* The AdBlue® system is malfunctioning. ▶ Consult a qualified specialist workshop immediately.
Refill AdBlue See Owner's Manual	* The AdBlue® level has fallen below the reserve range. ▶ Refill AdBlue® immediately .

Display messages	Possible causes/consequences and ▶ Solutions
Refill AdBlue Eng. start not possible	* The AdBlue® tank is empty. You can no longer start the engine. ▶ Top up at least 4.5 l of AdBlue® . ▶ Switch the ignition on. You can restart the engine after approximately one minute.

Tyres

Display messages	Possible causes/consequences and ▶ Solutions
Tyre pressure Check tyres	* The tyre pressure loss warning system has detected a significant loss in pressure. ⚠ **WARNING** Risk of an accident due to insufficient tyre pressure Tyres with insufficient tyre pressure pose the following risks: • The tyres may burst, especially as the load and vehicle speed increase. • The tyres may wear excessively and/or unevenly, which may greatly impair tyre traction. • - The driving characteristics, steering and braking may be greatly impaired. You could then lose control of the vehicle. ▶ Observe the recommended tyre pressures. ▶ Adjust the tyre pressure if necessary. ▶ Stop the vehicle, paying attention to road and traffic conditions. ▶ Check the tyre pressure and the tyres. ▶ When the tyre pressure is correct, restart the tyre pressure loss warning system .
Check tyre pressures then restart Run Flat Indicator	* The tyre pressure loss warning system generated a display message and has not been restarted since. ▶ When the tyre pressure is correct, restart the tyre pressure loss warning system .
Run Flat Indicator inoperative	* The tyre pressure loss warning system is malfunctioning. ▶ Consult a qualified specialist workshop.

Display messages	Possible causes/consequences and ▶ Solutions
 Rectify tyre pressure	* The tyre pressure is too low in at least one of the tyres, or the tyre pressure difference between the wheels is too great. ▶ Check the tyre pressure and add air, if necessary. ▶ When the tyre pressure is correct, restart the tyre pressure monitoring system .
 Check tyre(s)	* The tyre pressure in one or more tyres has dropped significantly. The wheel position is displayed. ⚠ **WARNING** Risk of an accident due to insufficient tyre pressure Tyres with insufficient tyre pressure pose the following risks: • The tyres may burst, especially as the load and vehicle speed increase. • The tyres may wear excessively and/or unevenly, which may greatly impair tyre traction. • - The driving characteristics, steering and braking may be greatly impaired. You could then lose control of the vehicle. ▶ Observe the recommended tyre pressures. ▶ Adjust the tyre pressure if necessary. ▶ Stop the vehicle, paying attention to road and traffic conditions. ▶ Check the tyre pressure and the tyres.

Display messages	Possible causes/consequences and ▶ Solutions
 Warning tyre defect	* The tyre pressure in one or more tyres has dropped suddenly. The wheel position is displayed. ⚠ **WARNING** Risk of an accident from driving with a flat tyre Flat tyres are dangerous in the following ways: • The tyres can overheat and cause a fire. • - The driving characteristics, steering and braking may be greatly impaired. You could then lose control of the vehicle. ▶ Do not drive with a flat tyre. ▶ Observe the notes on flat tyres. Notes on flat tyres (→ page 390). ▶ Stop the vehicle, paying attention to road and traffic conditions. ▶ Check the tyres.
Tyre press. monitor currently unavailable	* No signals can be received from the tyre pressure sensors due to strong radio signal source interference. The tyre pressure monitoring system is temporarily unavailable. ▶ Drive on. The tyre pressure monitoring system restarts automatically as soon as the cause has been rectified.

Display messages	Possible causes/consequences and ▶ Solutions
Wheel sensor(s) missing	* There is no signal from the tyre pressure sensor of one or more wheels. The pressure of the affected tyre is not displayed. ▶ Have the faulty tyre pressure sensor replaced at a qualified specialist workshop.
Tyre press. monitor inoperative No wheel sensors	* The wheels fitted do not have suitable tyre pressure sensors. The tyre pressure monitoring system is deactivated. ▶ Fit wheels with suitable tyre pressure sensors.
Tyre press. monitor inoperative	* The tyre pressure monitoring system is faulty. ⚠ **WARNING** There is a risk of an accident if the tyre pressure monitoring system is malfunctioning If the tyre pressure monitoring system is malfunctioning, it is not able to issue a warning if there is pressure loss in one or more of the tyres. Tyres with insufficient tyre pressure may, for example, affect the vehicle's handling characteristics, steering and braking. - ▶ Have the tyre pressure monitoring system checked at a qualified specialist workshop. ▶ Consult a qualified specialist workshop.
Tyre(s) overheated	* At least one tyre is overheating. The affected tyres are displayed in red. At temperatures close to the limit value, the tyres are displayed in yellow. ▶ Drive more slowly.

Display messages	Possible causes/consequences and ▶ Solutions
Tyre(s) overheated Reduce speed	* At least one tyre is overheating. ⚠ **WARNING** Risk of an accident from driving with overheated tyres Overheated tyres may burst, particularly at high speeds. ▶ Reduce speed so that the tyres cool down. ▶ Reduce speed so that the tyres cool down.

Key

Display messages	Possible causes/consequences and ▶ Solutions
 Replace key	* The key needs to be replaced. ▶ Consult a qualified specialist workshop.

Display messages	Possible causes/consequences and ▶ Solutions
Replace key See Owner's Manual	* **Vehicles with a digital vehicle key:** only a few or no authorisations remain for starting the engine. ▶ Make sure that the internet connection is not limited by certain mobile phone settings. ▶ Open the Mercedes me connect web app http://www.mercedes.me. and call up the digital vehicle key service. ▶ Deactivate the service first and then activate it again. ▶ If the display message still appears, contact the Mercedes-Benz Customer Assistance Center (CAC). **Vehicles with a digital vehicle key sticker:** only a few or no authorisations remain for starting the engine. ▶ Order a new digital vehicle key sticker from a Mercedes-Benz Service Centre or at http://www.mercedes-benz.com/connect.
Change key batteries	* The key battery is discharged. ▶ Replace the battery .
Key not detected (white display message)	* The key is currently undetected. ▶ Change the location of the key in the vehicle. ▶ If the key is still not recognised, start the engine with the key in the stowage compartment .

Display messages	Possible causes/consequences and ▶ Solutions
 Key not detected (red display message)	* The key cannot be detected and may no longer be in the vehicle. The key is no longer in the vehicle and you switch off the engine: • you can no longer start the engine. • you cannot centrally lock the vehicle. ▶ Ensure that the key is in the vehicle. If the key detection function has a malfunction due to a strong radio signal source: ▶ Pull over and stop the vehicle safely as soon as possible, paying attention to road and traffic conditions. ▶ Place the key in the stowage compartment for starting the engine with the key .
 Place the key in the marked space See Owner's Manual	* The key detection function is malfunctioning. ▶ Change the location of the key in the vehicle. ▶ Start the vehicle with the key in the stowage compartment .

Vehicle

Display messages	Possible causes/consequences and ▶ Solutions
 Trailer coupling extending...	* Retract or extend the ball neck. Do not attempt to speed up, slow down or initiate the retracting or extending process using your hand, foot or other aids. During the retracting or extending process, do not couple a trailer. When the ball neck has reached an operational position, the display message disappears.

Display messages	Possible causes/consequences and ▶ Solutions
Check trailer hitch lock	* The trailer hitch is not operational when you are driving with a trailer. ▶ Stop the vehicle immediately, paying attention to road and traffic conditions, and switch off the engine. ▶ Uncouple the trailer and safeguard it against rolling away. ▶ Initiate a new swivelling procedure . ▶ When the display message disappears, couple up the trailer and drive on. ⚠ **WARNING** Risk of an accident if the ball neck is not locked If the ball neck is not in the locked position, the trailer may come loose. ▶ Pull over and stop the vehicle safely as soon as possible, paying attention to road and traffic conditions. Do not continue driving under any circumstances. ▶ Uncouple the trailer and secure it against rolling away. ▶ Initiate a new swivelling procedure and do not re-couple the trailer until the display message disappears. If the display message does not disappear, the trailer hitch is defective and the ball neck is not locked. ▶ Do not couple up the trailer. Drive on without the trailer. Note the reduced ground clearance due to the unlocked ball neck. ▶ Consult a qualified specialist workshop. The trailer hitch is not operational when the vehicle is at a standstill. ▶ Uncouple the coupled trailer and safeguard it against rolling away. ▶ Initiate a new swivelling procedure .

Display messages	Possible causes/consequences and ▶ Solutions
	If the display message does not disappear, the trailer hitch is defective and the ball neck is not locked. ▶ Do not couple up the trailer. Drive on without the trailer. Note the reduced ground clearance due to the unlocked ball neck. ▶ Consult a qualified specialist workshop.
Apply brake to deselect Park (P) position	* You have attempted to shift the transmission out of position P and into another transmission position. ▶ Depress the brake pedal.
To shift out of P or N, depress brake and start engine	* You have attempted to shift the transmission out of position P or N into another transmission position. ▶ Depress the brake pedal. ▶ Start the engine.
Risk of vehicle rolling Driver door open and transmission not in P	* The driver's door is not fully closed and the transmission is in position R, N or D. ▶ Shift the transmission to position P when you park the vehicle.
N permanently active Risk of vehicle rolling	* While the vehicle is rolling or while you are driving, the transmission has been shifted to position N. ▶ Depress the brake pedal to stop and, when the vehicle is stationary, shift the transmission to position P. ▶ To continue your journey, shift the transmission to position D or R.
Only select Park (P) when vehicle is stationary	* The transmission can be shifted to position P only when the vehicle is stationary.

Display messages	Possible causes/consequences and ▶ Solutions
Without changing gear, consult workshop	* The transmission is malfunctioning. The transmission position can no longer be shifted. ▶ When the transmission is in position D, consult a qualified specialist workshop and do not shift the transmission position. ▶ For all other transmission positions, park the vehicle safely. ▶ Consult a qualified specialist workshop.
Vehicle is operational Switch off the ignition before exiting	* You are leaving the vehicle when it is in a ready-to-drive state. ▶ When leaving the vehicle, switch off the ignition, secure the vehicle against rolling away and take the key with you. ▶ If you do not leave the vehicle, switch off the electrical consumers, e.g. the seat heater. Otherwise, the 12-V battery may discharge and it will then be possible to start the vehicle only using a donor battery (starting assistance).
Transmission Malfunction Stop	* The transmission is malfunctioning. The transmission shifts to position N automatically. ▶ Pull over and stop the vehicle safely as soon as possible, paying attention to road and traffic conditions. ▶ Switch the transmission to position P. ▶ Consult a qualified specialist workshop.
Reversing not poss. Consult workshop	* The transmission is malfunctioning. Reverse gear can no longer be engaged. ▶ Consult a qualified specialist workshop.

Display messages	Possible causes/consequences and ▶ Solutions
Auxiliary battery malfunction	* The auxiliary battery for the transmission is no longer being charged. ▶ Consult a qualified specialist workshop. ▶ Until then, always manually set the transmission to position P before you switch off the engine. ▶ Before leaving the vehicle, apply the electric parking brake.
Air conditioning Malfunction See Owner's Manual	* Operation of the climate control system is temporarily restricted. Airflow and fresh air supply are set to automatic mode. ▶ Have the climate control system checked at a qualified specialist workshop.
Getriebe Störung Werkstatt aufsuchen	* The transmission is malfunctioning. Consult a qualified specialist workshop.
Teaching in transmission complete	* The transmission's teach-in process is complete. All transmission positions can be engaged again.
Getriebe wird eingelernt Wählhebel betätigen Bremse für XX s treten Wegrollgefahr	* The transmission is being taught in. There is a risk of the vehicle rolling away. ▶ Depress and hold the brake pedal until the teach-in procedure has been completed. The electric parking brake is applied automatically during the teach-in procedure. ▶ Switch the ignition on. ▶ Select transmission position P, R or N.

Display messages	Possible causes/consequences and ▶ Solutions
Trans. oil overheated Drive on with care	* The transmission is overheating. When the display message is active, starting up and driving characteristics may be temporarily impaired. ▶ Drive at low speeds. ▶ Avoid sporty driving. ▶ Before starting up on uphill gradients, let the transmission cool down until the display message disappears.
Anti-theft alarm system Malfunction	* The anti-theft alarm system is malfunctioning. ▶ Consult a qualified specialist workshop.
Apply brake to select R	* You have attempted to shift the transmission out of position D and into transmission position R. ▶ Depress the brake pedal. ▶ Switch the transmission to position R.
 Operation only possible in transmission position N	* You have attempted to swivel the ball neck and the transmission is not in position N. ▶ Switch the transmission to position N.

Display messages	Possible causes/consequences and ▶ Solutions
 Operation only possible in transmission position P	* You have attempted to swivel the ball neck and the transmission is in position R, N or D. ▶ Depress the brake pedal. ▶ Switch the transmission to position P.
 Steering malfunction Stop immediately See Owner's Manual	* The steering is malfunctioning. Steering capability is considerably impaired. ⚠ **WARNING** Risk of accident if steering capability is impaired If the steering does not function as intended, the vehicle's operating safety is jeopardised. ▶ Pull over and stop the vehicle safely as soon as possible, paying attention to road and traffic conditions. Do not continue driving under any circumstances. ▶ Consult a qualified specialist workshop. ▶ Pull over and stop the vehicle safely as soon as possible, paying attention to road and traffic conditions. Do not continue driving under any circumstances. ▶ Consult a qualified specialist workshop.
 Steering malfunction Drive carefully Visit workshop	* The power assistance for the steering is malfunctioning. You may need to use more force to steer. ▶ Drive on carefully. ▶ Consult a qualified specialist workshop.

Display messages	Possible causes/consequences and ▶ Solutions
Let fresh air into the vehicle interior! Air conditioning malf. Visit workshop	* The climate control system is malfunctioning. **⚠ WARNING** Risk of injury and accident due to an insufficient supply of fresh air If the climate control system is malfunctioning, carbon dioxide levels may increase in the passenger compartment. Breathing in carbon dioxide may cause dizziness. ▶ Open the window to ensure that there is a sufficient supply of fresh air. ▶ Open the window to ensure that there is an adequate supply of fresh air. ▶ Consult a qualified specialist workshop immediately.
 Steering malfunction Increased physical effort See Owner's Manual	* The power assistance for the steering is malfunctioning. **⚠ WARNING** Risk of an accident due to altered steering characteristics If the power assistance of the steering fails partially or completely, you will need to use more force to steer. ▶ If safe steering is possible, drive on carefully. ▶ Visit or consult a qualified specialist workshop immediately. ▶ If safe steering is possible, drive on carefully. ▶ Visit or consult a qualified specialist workshop immediately.
Active bonnet malfunction See Owner's Manual	* The active bonnet (pedestrian protection) is malfunctioning or inoperative after having already been triggered. ▶ Consult a qualified specialist workshop.

Display messages	Possible causes/consequences and ▶ Solutions
	* The bonnet is open. **⚠ WARNING** Risk of accident due to driving with the engine bonnet unlocked An unlocked engine bonnet may open up when the vehicle is in motion and block your view. ▶ Never unlock the engine bonnet when driving. ▶ Before every trip, ensure that the engine bonnet is locked. ▶ Pull over and stop the vehicle safely as soon as possible. ▶ Close the bonnet.
	* At least one door is open. ▶ Close all doors.

Display messages	Possible causes/consequences and ▶ Solutions
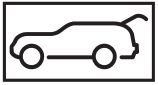	* The tailgate is open. ⚠ **WARNING** Risk of exhaust gas poisoning Combustion engines emit poisonous exhaust gases such as carbon monoxide. Exhaust gases can enter the vehicle interior if the tailgate is open when the engine is running, especially if the vehicle is in motion. ▶ Always switch off the engine before opening the tailgate. ▶ Never drive with the tailgate open. ▶ Close the tailgate.
 Top up washer fluid	* The washer fluid level in the washer fluid reservoir has dropped below the minimum. ▶ Top up the washer fluid .

Lights

Display messages	Possible causes/consequences and ▶ Solutions
Left dipped beam (example)	* The corresponding light source is defective. ▶ Consult a qualified specialist workshop. or ▶ Check whether you are permitted to replace the light source yourself . ⓘ LED light bulbs: the display message for the corresponding lamp appears only when all the light-emitting diodes in the lamp have failed.
Active Light System inoperative	* The active headlamps are faulty. ▶ Consult a qualified specialist workshop.
Intelligent Light System inoperative	* The Intelligent Light System is faulty. The lighting system continues to function properly without the functions of the Intelligent Light System. ▶ Consult a qualified specialist workshop.

Display messages	Possible causes/consequences and ▶ Solutions
Malfunction See Owner's Manual	* The exterior lighting is faulty. ▶ Consult a qualified specialist workshop. **Vehicles with a trailer hitch:** a fuse may have blown. ▶ Pull over and stop the vehicle safely as soon as possible, paying attention to road and traffic conditions. ▶ Check the fuses and replace them if necessary .
AUTO lights inoperative	* The light sensor is faulty. ▶ Consult a qualified specialist workshop.
Switch off lights	* You are leaving the vehicle and the lights are still switched on. ▶ Turn the light switch to the AUTO position.
Switch on headlamps	* You are driving without dipped-beam headlamps. ▶ Turn the light switch to the ≣D or AUTO position.
Adaptive Highbeam Assist Plus inoperative	* Adaptive Highbeam Assist Plus is faulty. ▶ Consult a qualified specialist workshop.

Display messages	Possible causes/consequences and ▶ Solutions
Adaptive Highbeam Assist Plus currently unavailable See Owner's Manual	* Adaptive Highbeam Assist Plus is temporarily unavailable. The system borders have been reached (→ page 122). ▶ Drive on. Once the cause of the problem is no longer present, the system will be available again. The Adaptive Highbeam Assist Plus available again display message appears.
Adaptive Highbeam Assist inoperative	* Adaptive Highbeam Assist is malfunctioning. ▶ Consult a qualified specialist workshop.
Adaptive Highbeam Assist currently unavailable See Owner's Manual	* Adaptive Highbeam Assist is temporarily unavailable. The system borders have been reached (→ page 121). ▶ Drive on. Once the cause of the problem is no longer present, the system will be available again. The Adaptive Highbeam Assist available again display message appears.

Warning and indicator lamps

Overview of warning and indicator lamps

Some systems perform a self-test when the ignition is switched on. Some warning and indicator lamps may briefly light up or flash. This behaviour is non-critical. These warning and indicator lamps indicate a malfunction only if they light up or flash after the engine is started or during a journey.

Instrument display (standard)

Instrument display in the widescreen cockpit

The positions of the indicator lamps on the instrument display may differ from the sample display depending on the display setting.

Warning and indicator lamps:

- Dipped beam (→ page 116)
- Standing lights (→ page 116)
- Main beam (→ page 118)
- Turn signal light (→ page 118)
- Rear fog light (→ page 116)
- Seat belt not fastened (→ page 504)
- Brakes (red) (→ page 498)
- Brakes (yellow) (→ page 498)
- ABS malfunctioning (→ page 498)
- ESP®(→ page 498)
- ESP® OFF (→ page 498)
- Electric parking brake (→ page 498)
- Power-assisted steering malfunctioning (→ page 506)
- Electrical fault(→ page 508)
- Restraint system (→ page 498)
- Engine diagnostics (→ page 508)
- Fuel reserve with fuel filler cap location indicator (→ page 508)
- **Vehicles with widescreen cockpit:** coolant too hot/cold (→ page 508)
- Distance warning (→ page 505)
- Preglow
- Tyre pressure monitoring system (→ page 511)
- Trailer hitch is not operational or swivels (→ page 506)

Safety systems

Warning/indicator lamp	Possible causes/consequences and ▶ Solutions
 Brake system warning lamp (yellow)	The yellow brake system warning lamp is lit while the engine is running. ⚠ **WARNING** Risk of an accident due to a brake system malfunction If the brake system is malfunctioning, braking characteristics may be impaired. ▶ Drive on carefully. ▶ Have the brake system checked immediately at a qualified specialist workshop. ▶ Adjust your speed and continue to drive carefully, leaving a suitable distance to the vehicle in front. ▶ If the multifunction display shows a display message, please observe this. ▶ Consult a qualified specialist workshop.

Warning/indicator lamp	Possible causes/consequences and ▶ Solutions
 Brake system warning lamp (red)	The red brake system warning lamp is lit while the engine is running. Possible causes: • The brake force boosting is malfunctioning and the braking characteristics may be affected. • There is insufficient brake fluid in the brake fluid reservoir. ⚠ **WARNING** There is a risk of an accident if brake force boosting is malfunctioning If brake force boosting is malfunctioning, increased brake pedal force may be necessary for braking. Braking characteristics may be impaired. The braking distance may increase in an emergency braking situation. ▶ Pull over and stop the vehicle safely as soon as possible, paying attention to road and traffic conditions. Do not continue driving under any circumstances. ▶ Consult a qualified specialist workshop. ⚠ **WARNING** Risk of an accident due to low brake fluid level If the brake fluid level is too low, the braking effect and the braking characteristics may be impaired. ▶ Pull over and stop the vehicle safely as soon as possible, paying attention to road and traffic conditions. Do not continue driving under any circumstances. ▶ Consult a qualified specialist workshop. Do not top up the brake fluid.

Warning/indicator lamp	Possible causes/consequences and ▶ Solutions
	▶ Pull over and stop the vehicle safely as soon as possible, paying attention to road and traffic conditions. Do not continue driving under any circumstances. ▶ Observe the messages on the multifunction display. ▶ Consult a qualified specialist workshop.
ABS warning lamp	The yellow ABS warning lamp is lit while the engine is running. ABS is malfunctioning. If there is an additional acoustic warning signal, EBD is malfunctioning. Other driving systems and driving safety systems may also be faulty. ⚠ **WARNING** There is risk of skidding if EBD or ABS is malfunctioning If EBD or ABS is malfunctioning, the wheels could lock when braking The steering capability and braking characteristics are thus severely impaired. The braking distance may increase in an emergency braking situation. In addition, other driving safety systems are switched off. ▶ Drive on carefully. ▶ Have the brake system checked immediately at a qualified specialist workshop. ▶ Drive on carefully. ▶ Observe the messages in the multifunction display. ▶ Consult a qualified specialist workshop.

Warning/indicator lamp	Possible causes/consequences and ▶ Solutions
 ESP® warning lamp flashes	The yellow ESP® warning lamp flashes while the vehicle is in motion. ESP® is intervening . ▶ Adapt your driving style to suit the road and weather conditions.
 ESP® warning lamp lights up	The yellow ESP® warning lamp is lit while the engine is running. ESP® is malfunctioning. Other driving and driving safety systems may also be faulty. ⚠ **WARNING** Risk of skidding if ESP® is malfunctioning If ESP® is malfunctioning, ESP® cannot carry out vehicle stabilisation. In addition, other driving safety systems are switched off. ▶ Drive on carefully. ▶ Have ESP® checked at a qualified specialist workshop. ▶ Drive on carefully. ▶ Observe the messages in the multifunction display. ▶ Consult a qualified specialist workshop.

Warning/indicator lamp	Possible causes/consequences and ▶ Solutions
 ESP® OFF warning lamp	The yellow ESP® OFF warning lamp is lit while the engine is running. ESP® is deactivated. ⚠ **WARNING** Risk of skidding when driving with ESP® deactivated If ESP® is deactivated, ESP® cannot carry out vehicle stabilisation. The availability of further driving safety systems is also limited. ▶ Drive on carefully. ▶ Only deactivate ESP® for as long as the situation requires. If ESP® cannot be activated, ESP® is malfunctioning. ▶ Have ESP® checked immediately at a qualified specialist workshop. ▶ Observe the notes on deactivating ESP® .

Warning/indicator lamp	Possible causes/consequences and ▶ Solutions
 Red indicator lamp, electric parking brake applied Yellow electric parking brake indicator lamp is malfunctioning	The red electric parking brake indicator lamp flashes or is lit. The yellow indicator lamp is also lit if the electric parking brake malfunctions. ▶ Observe the messages in the multifunction display.

Warning/indicator lamp	Possible causes/consequences and ▶ Solutions
 Restraint system warning lamp	The red restraint system warning lamp is lit while the engine is running. The restraint system is malfunctioning. ⚠ **WARNING** Risk of injury or fatal injury due to a malfunction in the restraint system If the restraint system is malfunctioning, restraint system components may be triggered unintentionally or might not be triggered at all in the event of an accident. This may affect the seat belt tensioner or airbag, for example. ▶ Have the restraint system checked and repaired immediately at a qualified specialist workshop. ▶ Drive on carefully. ▶ Observe the messages in the multifunction display. ▶ Consult a qualified specialist workshop immediately.

Seat belt

Warning/indicator lamp	Possible causes/consequences and ▶ Solutions
 Seat belt warning lamp lights up	The red seat belt warning lamp lights up after the engine is started. In addition, an acoustic warning tone may sound. The seat belt warning lamp reminds the driver and front passenger to fasten their seat belts. ▶ Fasten your seat belt. If you have placed objects on the front passenger seat, the seat belt warning lamp may remain lit.

Warning/indicator lamp	Possible causes/consequences and ▶ Solutions
Seat belt warning lamp flashes	The red seat belt warning lamp flashes and an intermittent warning tone sounds. The driver or front passenger has not fastened their seat belt while the vehicle is in motion. ▶ Fasten your seat belt. There are objects on the front passenger seat. ▶ Remove the objects from the front passenger seat.

Driving systems

Warning/indicator lamp	Possible causes/consequences and ▶ Solutions
Distance warning warning lamp	The red distance warning lamp lights up while the vehicle is in motion. The distance to the vehicle in front is too small for the speed selected. If there is an additional warning tone, you are approaching an obstacle at too high a speed. ▶ Be prepared to brake immediately. ▶ Increase the distance. Active Brake Assist.

Vehicle

Warning/indicator lamp	Possible causes/consequences and ▶ Solutions
 Trailer hitch warning lamp	The red trailer hitch warning lamp is on. The trailer hitch is not operational or swivels. ⚠ **WARNING** Risk of an accident if the ball neck is not locked If the ball neck is not in the locked position, the trailer may come loose. ▶ Pull over and stop the vehicle safely as soon as possible, paying attention to road and traffic conditions. Do not continue driving under any circumstances. ▶ Uncouple the trailer and secure it against rolling away. ▶ Initiate a new swivelling procedure and do not re-couple the trailer until the display message disappears. ▶ Observe the messages in the multifunction display. If the trailer hitch swivels: ▶ Wait until the ball neck has reached the operational position.

Warning/indicator lamp	Possible causes/consequences and ▶ Solutions
 Power steering system warning lamp	The red power steering system warning lamp is lit while the engine is running. The power steering assistance or the steering itself is malfunctioning. ⚠ **WARNING** Risk of accident if steering capability is impaired If the steering does not function as intended, the vehicle's operating safety is jeopardised. ▶ Pull over and stop the vehicle safely as soon as possible, paying attention to road and traffic conditions. Do not continue driving under any circumstances. ▶ Consult a qualified specialist workshop. ▶ Observe the messages in the multifunction display.

Engine

Warning/indicator lamp	Possible causes/consequences and ▶ Solutions
Engine diagnosis warning lamp	The yellow engine diagnostics warning lamp is lit while the engine is running. A malfunction has occurred in the engine, the exhaust system or the fuel system. The emissions limit value may have been exceeded and the engine may be running in emergency operation mode. ▶ Have the vehicle checked as soon as possible at a qualified specialist workshop. **Vehicles with a diesel engine:** the fuel tank may have been run dry. ▶ Start the engine three to four times after refuelling. If the yellow engine diagnostics warning lamp goes out, emergency operation mode is cancelled. The vehicle need not be checked.
Fuel reserve warning lamp	The yellow fuel reserve warning lamp is lit while the engine is running. The fuel supply has dropped into the reserve range. ▶ Refuel.
Electrical fault warning lamp	The red electrical fault warning lamp is lit. There is a fault in the electrics. ▶ Observe the messages in the multifunction display.

Warning/indicator lamp	Possible causes/consequences and ▶ Solutions
 Coolant warning lamp	The red coolant warning lamp is lit while the engine is running. Possible causes: • The temperature sensor is malfunctioning • Coolant level too low • The air supply to the radiator is obstructed • The radiator fan is faulty If there is an additional warning tone, the coolant temperature has exceeded 120 °C. ⚠ **WARNING** Danger of burns when opening the bonnet If you open the engine bonnet when the engine has overheated or during a fire in the engine compartment, you could come into contact with hot gases or other escaping operating fluids. ▶ Before opening the bonnet, allow the engine to cool down. ▶ In the event of a fire in the engine compartment, keep the engine bonnet closed and call the fire service. ▶ Stop the vehicle immediately, paying attention to road and traffic conditions, and switch off the engine. Do not continue driving under any circumstances. ▶ Observe the messages in the multifunction display. If the coolant temperature display is at the lower end of the temperature scale: ▶ Consult a qualified specialist workshop.

Warning/indicator lamp	Possible causes/consequences and ▶ Solutions
	Otherwise: ▶ Leave the vehicle and keep a safe distance from the vehicle until the engine has cooled down. ▶ Check the coolant level. ▶ Make sure that the air supply to the radiator is not obstructed. ▶ Avoiding high loads on the engine, drive on to the nearest qualified specialist workshop. In doing so, ensure that the coolant temperature display remains below 120 °C.

Tyres

Warning/indicator lamp	Possible causes/consequences and ▶ Solutions
Tyre pressure monitoring system warning lamp lights up	The yellow tyre pressure monitoring system warning lamp (pressure loss/malfunction) is lit. The tyre pressure monitoring system has detected tyre pressure loss in at least one of the tyres. ⚠ **WARNING** Risk of an accident due to insufficient tyre pressure Tyres with insufficient tyre pressure pose the following risks: • The tyres may burst, especially as the load and vehicle speed increase. • The tyres may wear excessively and/or unevenly, which may greatly impair tyre traction. • - The driving characteristics, steering and braking may be greatly impaired. You could then lose control of the vehicle. ▶ Observe the recommended tyre pressures. ▶ Adjust the tyre pressure if necessary. ▶ Stop the vehicle, paying attention to road and traffic conditions. ▶ Check the tyre pressure and the tyres.

Warning/indicator lamp	Possible causes/consequences and ▶ Solutions
Tyre pressure monitoring system warning lamp flashes	The yellow tyre pressure monitoring system warning lamp (pressure loss/malfunction) flashes for approximately one minute and then remains lit. The tyre pressure monitoring system is faulty. ⚠ **WARNING** There is a risk of an accident if the tyre pressure monitoring system is malfunctioning If the tyre pressure monitoring system is malfunctioning, it is not able to issue a warning if there is pressure loss in one or more of the tyres. Tyres with insufficient tyre pressure may, for example, affect the vehicle's handling characteristics, steering and braking. - ▶ Have the tyre pressure monitoring system checked at a qualified specialist workshop. ▶ Consult a qualified specialist workshop.

1, 2, 3 ...

12 V battery 400
Replacing 400
12 V socket
see Socket (12 V)
230 V socket
see Socket (230 V)
360° Camera 202
Care 384
Function 202
Selecting a view 205
Setting as a favourite 205

A

A/C function
Activating/deactivating (multimedia system) 136
Switching on/off (control panel) 136
ABS (Anti-lock Braking System) 169
Acceleration
see Kickdown
Access data
Setting 353
Acoustic locking verification signal
Activating/deactivating 65
Active Blind Spot Assist 216
Activating/deactivating 219
Brake application 217
Function 216
System limitations 216
Trailer operation 217
Active bonnet (pedestrian protection) .. 375
Operation 375
Resetting 375
Active Brake Assist
Function/notes 174
Setting 178
Active Distance Assist DISTRONIC 183
Active Emergency Stop Assist 192
Active Lane Change Assist 190
Calling up a speed 184
Displays in the Instrument Display 192
Function 183
Increasing/decreasing speed 184
Requirements: 184
Route-based speed adaptation 187
Selecting 184
Steering wheel buttons 184
Storing a speed 184
Switching off/deactivating 184
Switching on/activating 184
System limitations 183
Active Emergency Stop Assist 192
Active headlamps function 119
Active Lane Change Assist
Activating/deactivating 192
Function 190
Active Lane Keeping Assist 219
Activating/deactivating 220
Function 219
Sensitivity (function/notes) 221
Setting the sensitivity 221
System limitations 219
Active Parking Assist 205
Cross Traffic Alert 210
Drive Away Assist 209
Exiting a parking space 208
Function 205
Parking 207
System limitations 205

Active Speed Limit Assist 186, 216
Display 186
Function 186
Setting 216
Active Steering Assist 188
Activating/deactivating 190
Active Emergency Stop Assist 192
Active Lane Change Assist 190
Displays in the Instrument Display 192
Function 188
System limitations 188
Adaptive brake lights 178
Adaptive cruise control
see Active Distance Assist DISTRONIC
Adaptive functions, MULTIBEAM LED
see Intelligent Light System
Adaptive Highbeam Assist
Activating/deactivating 122
Function 121
Adaptive Highbeam Assist Plus
Activating/deactivating 123
Function 122
AdBlue® 436
Additives 436
Filling capacity 437
Notes 157
Purity 436
Topping up 158
Additional door lock 68
Additives 437
AdBlue 436
Engine oil 437
Fuelling 434
Additives (AdBlue®)
see AdBlue®
Additives (engine oil)
see Additives
Additives (fuel)
see Fuelling
Address book
see Contacts
Adjusting the balance/fader
Burmester® surround sound system 373
Adjusting the headlamp range 117
Adjusting the sound focus
Burmester® surround sound system 373
Advanced sound system
Calling up the sound menu 373
Information 373
After-sales service centre
see ASSYST PLUS
Air conditioning menu
Calling up 136
Air conditioning system
see Climate control
Air distribution 135
Setting (multimedia system) 137
Air vents 138
Adjusting (front) 138
Adjusting (rear) 139
Air vents
see Air vents
Air-recirculation mode 138
Airbag 37
Activation 31
Front airbag (driver, front passenger) 37
Installation locations 37

Knee airbag 37
Overview 37
Protection 37
Reduced protection 39
Side impact airbag 37
Windowbag 37

Airflow 135

Alarm
see Panic alarm

Alarm system
see ATA (anti-theft alarm system)

Alternative route
see Route

Ambient lighting 124

Android Auto 343
Connecting a mobile phone 344
Ending 345
Note 344
Overview 343
Sound settings 345
Transferred vehicle data 345

Animals
Pets in the vehicle 62

Anti-lock braking system
see ABS (Anti-lock Braking System)

Anti-skid chains
see Snow chains

Anti-theft alarm system
see ATA (anti-theft alarm system)

Anti-theft protection
Additional door lock 68
Immobiliser 83

Anti-theft protection
see ATA (anti-theft alarm system)

Anticipatory occupant protection
see PRE-SAFE® (anticipatory occupant protection)
see PRE-SAFE® PLUS (anticipatory occupant protection plus)

Apple CarPlay™ 342
Connecting an iPhone® 343
Exiting 343
Notes 342
Overview 342
Tone settings 343
Transferred vehicle data 345

Ashtray 110

Assistance systems
see Driving safety system

Assistant display
Menu (on-board computer) 233

ASSYST PLUS 374
Battery disconnection periods 375
Displaying the service due date 374
Function/notes 374
Regular maintenance work 374
Special service requirements 374

ATA (anti-theft alarm system) 83
Activating/deactivating interior protection 85
Deactivating the alarm 84
Function 83
Function of interior protection 85
Priming/deactivating tow-away protection 84
Tow-away protection function 84

ATTENTION ASSIST 211, 213
Function 211
Setting 213
System limitations 211

Attention assistant
see ATTENTION ASSIST
Authorised workshop
see Qualified specialist workshop
Automatic distance control
see Active Distance Assist DISTRONIC
Automatic driving lights 117
Automatic engine start (ECO start/stop function) 147
Automatic engine stop (ECO start/stop function) 147
Automatic front passenger front airbag deactivation system 39, 41
Function of the automatic front passenger front airbag deactivation system 39
PASSENGER AIR BAG indicator lamp 41
Automatic front passenger front airbag deactivation system
see Automatic front passenger front airbag deactivation system
Automatic mirror folding function
Activating/deactivating 133
Automatic transmission
DIRECT SELECT lever 150
Drive program display 149
Drive programs 149
DYNAMIC SELECT switch 149
Engaging drive position 152
Engaging reverse gear 152
Kickdown 153
Manual gearshifting 152
Selecting park position 152
Shifting to neutral 152
Steering wheel gearshift paddles 152
Transmission position display 150
Transmission positions 150
Axle load
Permissible 431
Trailer operation 442

B

Bag hook 106
Ball neck
Folding in/out 221
BAS (Brake Assist System) 169
Battery
Charging (Remote Online) 144
Key 66
Battery (vehicle)
Charging 397
Notes 395
Starting assistance 397
Belt
see Seat belt
Bicycle rack
Trailer operation 224
Blind Spot Assist 216
Activating/deactivating 219
Function 216
System limitations 216
Blower
see Climate control
BlueTEC
see AdBlue®
Bluetooth®
Activating/deactivating 283
Setting up an Internet connection 353
Settings 283

Boot lid
see Tailgate
Brake Assist System
see BAS (Brake Assist System)
Brake fluid
Notes 438
Brake force distribution
EBD (Electronic Brake force Distribution) 173
Brakes
ABS (Anti-lock Braking System) 169
Active Brake Assist 174
Adaptive brake lights 178
BAS (Brake Assist System) 169
Driving tips 145
EBD (Electronic Brake force Distribution) 173
HOLD function 194
Limited braking effect (salt-treated roads) 145
New/replaced brake linings/brake discs 145
Running-in notes 145
Braking assistance
see BAS (Brake Assist System)
Breakdown
Assistance overview 16
Tow-starting 404
Towing away 401
Transporting the vehicle 403
Wheel change 422
Breakdown
see Flat tyre
Burmester® surround sound system 372
Adjusting the balance/fader 373
Adjusting the sound focus 373
Adjusting treble, mid-range and bass settings 372
Automatic volume adjustment 373
Calling up the sound menu 372
Information 372
Switching the surround sound on/off 373
Buttons
Steering wheel 228

C

Call list
Making a call 338, 339
Options in the call list 338
Overview 338
Calling up the sound menu
Burmester® surround sound system 372
Calls 333
Accepting 333
Activating functions during a call 333
Calls with several participants 334
Declining 333
Ending a call 333
Incoming call during an existing call 334
Making 333
Camera
see 360° Camera
see Reversing camera
Car key
see Key
Car wash
see Care
Car wash (care) 381

Car-to-X-Communication
Displaying hazard warnings 318
Overview 317
Sending hazard warnings 318
Care 386
Car wash 381
Carpet 386
Display 386
EASY-PACK boot box 386
Exhaust pipes 384
Exterior lighting 384
High-pressure cleaner 381
Matt finish 383
Paintwork 383
Plastic trim 386
Real wood/trim elements 386
Reversing camera/360° Camera 384
Roof lining 386
Seat belt 386
Seat cover 386
Sensors 384
Trailer tow hitch 384
Washing by hand 382
Wheels/rims 384
Windows 384
Wiper blades 384
Carpet (Care) 386
Changing bulbs 125
Dipped beam 127
Fitting/removing cover (front wheel arch) 126
Main beam 127
Notes 125
Overview 126
Reversing lights 127
Turn signal lights (rear) 127
Changing hub caps 422
Changing the lights
Driving abroad (symmetrical dipped beam) 116
Channel tracking
Setting 371
Charging
Battery (vehicle) 397
Mobile phone (wireless) 113
USB port 113
Chassis
Damping characteristics 195
DYNAMIC BODY CONTROL 195
Child safety lock
Rear side windows 62
Child seat
Attaching (notes) 53
Front passenger seat (notes) 51
Front passenger seat (rearward-facing/forward-facing) 52
Front passenger seat (without airbag shutoff) 52
ISOFIX/i-Size (fitting) 49
Notes 45
Recommendations for child restraint systems 59
Seats suitable for belt-secured child restraint systems 54
Seats suitable for i-Size child restraint systems 58
Seats suitable for ISOFIX child restraint systems 56
Top Tether 50
Child seat
see i-Size child seat securing system
see ISOFIX child seat securing system

Child-safety lock
Rear door 61
Children
Restraint systems 45
Chock 421
Storage location 421
Cigarette lighter
Front centre console 111
City lighting 120
Cleaning
see Care
Climate control 135
Activating/deactivating the A/C function (control panel) 136
Activating/deactivating the A/C function (multimedia system) 136
Activating/deactivating the synchronisation function (control panel) 137
Activating/deactivating the synchronisation function (multimedia system) 137
Air distribution settings 137
Air-recirculation mode 138
Automatic control 136
Demisting the windscreen 135
Demisting windows 137
Front air vents 138
Rear air vents 139
Residual heat 138
Setting (multimedia system) 136
Setting the air distribution 135
Setting the airflow 135
Setting the temperature 135
Switching on/off 136
Switching the rear window heater on/off 135
THERMATIC control panel 135
THERMOTRONIC control panel 135
Ventilating the vehicle (convenience opening) 76
Cockpit 6
Overview 6
Combination switch
see Turn signal light
Compass 325
Computer
On-board computer 229
Connection status
Displaying 355
Overview 355
Contacts 334
Calling up 335
Deleting 337
Deleting favourites 337
Downloading (from mobile phone) 335
Importing 336
Information 334
Making a call 336
Name format 335
Options 336
Saving a contact as a favourite 337
Selecting options for suggestions 337
Storing 336
Convenience closing 77
Convenience opening 76
Coolant (engine)
Level check 379
Notes 438
Cooling
see Climate control
Copyright 29

Cornering light 120
Cross Traffic Alert 210
Crosswind Assist
Function/notes 173
Cruise control
Buttons 181
Calling up a speed 181
Requirements: 181
Selecting 181
Setting a speed 181
Storing a speed 181
Switching off 181
Switching on 181
Cruise control: 179
Function 179
System limitations 179
Cup holder 108
Fitting/removing (centre console) 108
Rear 110

D

Damage detection (parked vehicle) 167
Dashboard
see Cockpit
Dashboard lighting
see Instrument lighting
Data acquisition
Vehicle 27
Data import/export
Function/notes 286
Importing/exporting 286
Date
Setting the time and date automatically 282
Deactivating the alarm (ATA) 84
Declaration of conformity
Electromagnetic compatibility 23
Jack 23
TIREFIT kit 24
Wireless vehicle components 23
Designs
Menu (on-board computer) 239
Destination 312
Editing intermediate destinations 303
Editing the previous destinations 312
External 312
Saving (current vehicle position) 312
Saving as global favourite 312
Destination entry 293, 296
Entering a POI or address 293
Entering an intermediate destination .. 303
Entering geo-coordinates 298
Notes 292
Selecting a contact 298
Selecting a POI 296
Selecting from favourites 299
Selecting from the map 298
Selecting previous destinations 296
Detecting inattentiveness
see ATTENTION ASSIST
Diagnostics connection 25
Diesel
Low outside temperatures 435
Notes 435
Digital Car Key sticker
Locking the vehicle 69
Unlocking the vehicle 69
Digital Owner's Manual 18

Digital speedometer 233
Digital Vehicle Key sticker
Starting the vehicle 142
Dinghy towing
see Tow-bar system
Dipped beam
Activating/deactivating 116
Changing bulbs 127
Setting 123
Setting for abroad 116
DIRECT SELECT lever 150
Engaging drive position 152
Engaging park position automatically .. 152
Engaging reverse gear 152
Function 150
Selecting park position 152
Shifting to neutral 152
Display
Care 386
Display (multimedia system)
Home screen 258
Notes 257
Operating 260
Settings 281
Display (on-board computer)
Displays on the multifunction display .. 231
Display message 443
Calling up (on-board computer) 443
Notes 443
Display messages
..... 473, 492
..... 493
..... 492
..... 465
Active Blind Spot Assist currently unavailable See Owner's Manual 460
Active Blind Spot Assist inoperative 461
Active Blind Spot Assist not available when towing a trailer See Owner's Manual 461
Active bonnet malfunction See Owner's Manual 491
Active Brake Assist Functions currently limited See Owner's Manual 454
Active Brake Assist Functions limited See Owner's Manual 454
Active Distance Assist available again 462
Active Distance Assist currently unavailable See Owner's Manual 464
Active Distance Assist inoperative 464
Active Lane Keeping Assist currently unavailable See Owner's Manual 459
Active Lane Keeping Assist inoperative 459
Active Light System inoperative .. 494
Active Parking Assist and PARKTRONIC inoperative See Owner's Manual 461
Active Steering Assist currently unavailable See Owner's Manual 465
Active Steering Assist inoperative 465

Adaptive Highbeam Assist currently unavailable See Owner's Manual 496
Adaptive Highbeam Assist inoperative 496
Adaptive Highbeam Assist Plus currently unavailable See Owner's Manual 496
Adaptive Highbeam Assist Plus inoperative 495
AdBlue system fault Engine start not possible 475
AdBlue system fault Perf. reduced in XXX miles See Owner's Manual 475
AdBlue system fault See Owner's Manual 475
Add 1 litre engine oil when next refuelling 471
Air conditioning Malfunction See Owner's Manual 488
Anti-theft alarm system Malfunction ... 489
Antriebssystem Störung Anhalten Motor aus 473
Antriebssystem Störung Werkstatt aufsuchen 473
Apply brake to deselect Park (P) position 486
Apply brake to select R 489
ATTENTION ASSIST inoperative ... 459
ATTENTION ASSIST: Take a break! 459
AUTO lights inoperative 495
Auxiliary battery malfunction 488
Blind Spot Assist currently unavailable See Owner's Manual 460
Blind Spot Assist inoperative 461
Blind Spot Assist not available when towing a trailer See Owner's Manual ... 460
..... 462
Change key batteries 482
Check brake fluid level 453
Check eng. oil lev. when next refuelling 470
Check trailer hitch lock 485
Check tyre(s) 478
Clean the fuel filter 472
Coolant Stop vehicle Switch engine off 467
Cruise control and Limiter inoperative 466
Cruise control inoperative 466
Cruise control off 465
Currently unavailable Camera dirty 464
Currently unavailable Radar sensors dirty 463
currently unavailable See Owner's Manual 445
currently unavailable See Owner's Manual 446
LIM 466

Engine oil level cannot be measured 472
Engine oil level Reduce oil level ... 471
Engine oil level Stop vehicle Switch engine off 470
Engine oil pressure Stop Switch off engine 472
Front left malfunction Consult workshop (example) 456
Front-passenger airbag disabled See Owner's Manual 457
Front-passenger airbag enabled See Owner's Manual 458
Getriebe Störung Werkstatt aufsuchen 488
Getriebe wird eingelernt Wählhebel betätigen Bremse für XX s treten Wegrollgefahr 488
inoperative See Owner's Manual 444
inoperative See Owner's Manual 447
EBD inoperative See Owner's Manual 448
SOS Inoperative 453
Intelligent Light System inoperative 494
Key not detected (white display message) 482
Key not detected (red display message) 483
Left dipped beam (example) 494
Left windowbag malfunction Consult workshop (example) 456
Let fresh air into the vehicle interior! Air conditioning malf. Visit workshop .. 491
Limiter inoperative 466
Limiter passive 465
Malfunction See Owner's Manual 495
120 km/h! Maximum speed exceeded 466
Mercedes me connect Services limited See Owner's Manual 454
N permanently active Risk of vehicle rolling 486
HOLD Off 462
Only select Park (P) when vehicle is stationary 486
Operation only possible in transmission position N 489
Operation only possible in transmission position P 490
(P) Parking brake See Owner's Manual 450
Place the key in the marked space See Owner's Manual 483
PRE-SAFE inoperative See Owner's Manual 454
Rectify tyre pressure 478

Refill AdBlue Eng. start not possible 476
Refill AdBlue See Owner's Manual 475
Release parking brake 449
Replace air cleaner 473
Replace key See Owner's Manual 482
Replace key 481
Reserve fuel level 473
Restraint sys. malfunction Consult workshop 455
Reversing not poss. Consult workshop 487
Risk of vehicle rolling Driver door open and transmission not in P 486
See Owner's Manual 468
Speed limit (winter tyres) XXX mph 466
Start engine See Owner's Manual 468
Steering malfunction Drive carefully Visit workshop 490
Steering malfunction Increased physical effort See Owner's Manual 491
Steering malfunction Stop immediately See Owner's Manual 490
Stop vehicle Leave engine running 469
Stop vehicle See Owner's Manual 469
Switch off lights 495
Switch on headlamps 495
Teaching in transmission complete 488
To shift out of P or N, depress brake and start engine 486
Top up coolant See Owner's Manual 467
Top up washer fluid 493
Traffic Sign Assist currently unavailable See Owner's Manual 461
Traffic Sign Assist inoperative 461
Trailer coupling extending... 484
Trans. oil overheated Drive on with care 489
Transmission Malfunction Stop 487
Turn on the ignition to release the parking brake 448
Tyre press. monitor currently unavailable 479
Tyre press. monitor inoperative 480
Tyre press. monitor inoperative No wheel sensors 480
Tyre pressure Check tyres 477
Tyre(s) overheated 480
Tyre(s) overheated Reduce speed 481
Vehicle is operational Switch off the ignition before exiting 487
Warning tyre defect 479
Wheel sensor(s) missing 480
Without changing gear, consult workshop 487

Display on the windscreen
see Head-up display
Distance control
see Active Distance Assist DISTRONIC
Distance recorder
see Trip distance
DISTRONIC
see Active Distance Assist DISTRONIC
Door
Additional door lock 68
Locking (emergency key) 72
Opening (from the inside) 69
Unlocking (emergency key) 72
Unlocking (from the inside) 69
Door control panel 14
Drawbar
see Tow-bar system
Drinks holder
see Cup holder
Drive Away Assist 209
Drive position
Selecting 152
Drive program display 149
Drive programs
see DYNAMIC SELECT
Driving lights
see Automatic driving lights
Driving safety system 168
ABS (Anti-lock Braking System) 169
Active Brake Assist 174
Adaptive brake lights 178
BAS (Brake Assist System) 169
EBD (Electronic Brake force Distribution) 173
ESP® (Electronic Stability Program) Crosswind Assist 173
ESP® (Electronic Stability Program) trailer stabilisation 173
Overview 169
Radar sensors 168
Responsibility 168
STEER CONTROL 173
Driving system
DYNAMIC BODY CONTROL 195
Driving system
see 360° Camera
see Active Blind Spot Assist
see Active Distance Assist DISTRONIC
see Active Lane Keeping Assist
see Active Parking Assist
see Active Speed Limit Assist
see Active Steering Assist
see ATTENTION ASSIST
see Blind Spot Assist
see Cruise control:
see Driving safety system
see HOLD function
see Limiter
see Parking Assist PARKTRONIC
see Reversing camera
see Speed Limit Assist
see Traffic Sign Assist
Driving tips
Driving abroad (changing the lights) 116
General driving tips 145
Running-in notes 145
Drowsiness detection
see ATTENTION ASSIST
DYNAMIC BODY CONTROL
Chassis 195

Dynamic handling control system
see ESP® (Electronic Stability Program)
DYNAMIC SELECT 149
Configuring drive program I 150
Displaying engine data 150
Displaying vehicle data 150
Drive program display 149
Drive programs 149
Function 149
Operating (DYNAMIC SELECT switch) 149
Selecting the drive program 149

E

E10 434
Easy entry feature
Function/notes 96
Setting 97
Easy exit feature
Function/notes 96
Setting 97
EBD (Electronic Brake force Distribution)
Function/notes 173
ECO display
Function 148
Resetting 234
ECO start/stop function 147, 148
Automatic engine start 147
Automatic engine stop 147
Operation 147
Switching off/on 148
Electric parking brake 165, 166, 167
Applying automatically 165
Applying or releasing manually 166
Emergency braking 167
Releasing automatically 166
Electrical fuses
see Fuses
Electromagnetic compatibility
Declaration of conformity 23
Electronic Stability Program
see ESP® (Electronic Stability Program)
Electronics 429
Emergency
Assistance overview 16
Fire extinguisher 389
First-aid kit (soft sided) 389
Removing the warning triangle 388
Safety vest 388
Setting up the warning triangle 389
Emergency braking 167
Emergency call system
see Mercedes-Benz emergency call system
Emergency engine start 404
Emergency key
Locking a door 72
Unlocking a door 72
Unlocking the tailgate 74
Emergency key element
Inserting/removing 66
Emergency operation mode
Starting the vehicle 143
Emergency spare wheel 427
Notes 427
Removing 428
Energy consumption
Key 65
Engine
ECO start/stop function 147

Engine number 431
Starting (Digital Vehicle Key sticker) 142
Starting (emergency operation mode) 143
Starting (mobile phone) 142
Starting (Remote Online) 144
Starting (start/stop button) 141
Starting assistance 397
Switching off (start/stop button) 160

Engine bonnet
Function (active bonnet) 375
Opening/closing 376
Resetting (active bonnet) 375

Engine data
Displaying 150

Engine electronics
Notes 429

Engine number 431

Engine oil 378
Additives 437
Checking the oil level using the on-board computer 378
Filling capacity 437
MB-Freigabe or MB-Approval 437
Quality 437
Topping up 378

Entering characters
Function/notes 277
On the touchpad 277
Setting the keyboard 281
Using the touchscreen 279

ERA-GLONASS test mode
Starting/ending 352

ESC (Electronic Stability Control)
see ESP® (Electronic Stability Program)

ESP®
Crosswind Assist 173
Trailer stabilisation 173

ESP® (Electronic Stability Program) 170
Activating/deactivating 172
Function/notes 170

EU general operating permit number 431

Exhaust pipes (Care) 384

Exterior lighting
Care 384

Exterior lighting
see Lights

F

Fatigue detection
see ATTENTION ASSIST

Fault message
see Display message

Favourites
Adding 271
Calling up 271
Deleting 272
Moving 272
Overview 271
Renaming 271

Filling station search
Starting an automatic filling station search 305
Switching the automatic filling station search on/off 304

Fire extinguisher 389

First-aid kit (soft sided) 389

Flat towing
see Tow-bar system

Flat tyre 390
MOExtended tyres 390

Notes ... 390
TIREFIT kit ... 391
Wheel change ... 422

Floor mats ... 115

Free software ... 29

Frequencies
Mobile phone ... 430
Two-way radio ... 430

Frequency band
Selecting (on-board computer) ... 236

Front airbag (driver, front passenger) ... 37

Front wheel arch
Fitting/removing the cover ... 126

Front wheel arch cover
Fitting/removing ... 126

Fuel
E10 ... 434
Petrol ... 434
Quality (petrol) ... 434
Reserve fuel level ... 436
Sulphur content ... 434
Tank capacity ... 436

Fuel consumption
On-board computer ... 233

Fuelling ... 434
Additives ... 434
Diesel ... 435
Low outside temperatures ... 435
Quality (diesel) ... 435
Refuelling ... 154

Function seat
see Door control panel

Fuse insert
see Fuses

Fuses ... 404
Assignment diagram ... 404
Before replacing a fuse ... 404
Fuse box in the engine compartment ... 405
Fuse box in the front-passenger foot-well ... 406
Fuse box in the load compartment ... 407
Notes ... 404

G

Garage door opener
Clearing the memory ... 163
Opening/closing the garage door ... 163
Programming buttons ... 161
Radio equipment approval numbers ... 164
Resolving problems ... 162
Synchronising the rolling code ... 162

Gearshift paddles
see Steering wheel gearshift paddles

Gearshift recommendation ... 153

General operating permit number (EU) ... 431

Genuine parts ... 21

Glide mode ... 154

Global search
Function ... 274
Overview ... 274

Glove box
Locking/unlocking ... 100

Gross weight ... 431

H

Handbrake
see Electric parking brake

Handling characteristics (unusual) 408
Hazard warning lights 119
Head restraint 90
Front (adjusting manually) 90
Rear (adjusting) 91
Rear (fitting/removing) 92
Head-up display 238
Adjusting display elements (on-board computer) 238
Adjusting the brightness (on-board computer) 238
Function 239
Menu (on-board computer) 238
Setting the position (on-board computer) 238
Using the memory function 97
Headlamp flasher 118
Heating
see Climate control
High-pressure cleaner (care) 381
Hill Start Assist 194
HOLD function 194
Activating/deactivating 194
Function/notes 194
Home screen (multimedia system display)
Overview 258
Hotspot
Setting up (Wi-Fi) 285

I

i-Size child seat securing system 47
Fitting 49
Notes 47
Seats suitable for attaching 58
Identification plate
Engine 431
Vehicle 431
Ignition
Switching on (Start/Stop button) 140
Ignition key
see Key
Immobiliser 83
Implied warranty
Vehicle 26
In Car Office
Selecting options of Tasks & Calls 342
Indicator lamp
see Warning/indicator lamps
Individual drive program
Configuring 150
Selecting 149
Instrument cluster 8
Instrument cluster
see Instrument display
Instrument display 227
Adjusting the lighting 232
Function/notes 227
Overview 8, 227
Overview (standard) 8
Overview (widescreen) 8
Warning/indicator lamps 496
Instrument display
see Instrument cluster
Instrument lighting 232
Intelligent Light System 119
Activating/deactivating 120
Active headlamps function 119

Adaptive Highbeam Assist Plus 122
City lighting 120
Cornering light 120
Motorway mode 120
Overview 119

Interior lighting 124
Ambient lighting 124
Setting 124
Switch-off delay time 125

Interior lighting
see Interior lighting
see Lighting
see Lights

Interior protection
Activating/deactivating 85
Function 85

Intermediate destination
Calculating a route with intermediate destinations 303
Editing 303
Entering 303
Starting an automatic filling station search 305
Starting the automatic service station search 305

Internet
Deleting a bookmark 358
Deleting history 358
Managing bookmarks 358

Internet connection
Cancelling permission 354
Connection status 355
Displaying the connection status 355
Establishing 354
Information 352
Mobile phone details 354
Restrictions 352
Setting access data 353
Setting up (Bluetooth®) 353
Via Bluetooth® 353
Via communication module 353
Via Wi-Fi 353

Internet radio
Calling up 359
Calling up the station list (category last selected) 361
Deleting stations 361
Logging out 361
Overview 360
Registering 361
Saving stations 361
Selecting and connecting to a station 361
Selecting the stream 361
Setting options 361
Terms of use 361

iPhone®
see Apple CarPlay™

ISOFIX child seat securing system 47
Fitting 49
Notes 47
Seats suitable for attaching 56

J

Jack
Declaration of Conformity 23
Storage location 421

Jump-start connection 397

K

Key 64
Battery 66

Emergency key element 66
Energy consumption 65
Features 64
Key ring attachment 66
Overview 64
Panic alarm 65
Problem 67
Unlocking setting 65

KEYLESS-GO
Locking the vehicle 70
Problem 71
Unlocking setting 65
Unlocking the vehicle 70

Kickdown 153
Using 153

Knee airbag 37

L

Laden 105
Tie-down eyes 105

Lamp (instrument display)
see Warning/indicator lamps

Lamps
see Interior lighting

Lane Keeping Assist
see Active Lane Keeping Assist

Language
Notes 286
Setting 286

LED light
see Intelligent Light System

Light switch
Overview 116

Lighting 124

Lighting
see Lights

Lights 116, 124
Active headlamps function 119
Adaptive Highbeam Assist 121
Adaptive Highbeam Assist Plus 122
Adjusting the instrument lighting 232
Automatic driving lights 117
Changing bulbs 125
City lighting 120
Combination switch 118
Cornering light 120
Dipped beam 116
Driving abroad 116
Hazard warning lamps 119
Headlamp flasher 118
Headlamp range 117
Intelligent Light System 119
Light switch 116
Main beam 118
Motorway mode 120
Parking lights 116
Rear fog light 117
Responsibility for lighting systems 116
Setting the dipped beam 123
Standing lights 116
Turn signal light 118

Limiter 180
Buttons 181
Calling up a speed 181
Function 180
Passive mode 180
Permanent setting 182
Requirements: 181
Selecting 181
Setting a speed 181
Storing a speed 181
Switching off 181
Switching on 181

System limitations 180
Limiting speed
see Limiter
LINGUATRONIC 240
Application specific voice commands 242
Audible help functions 243
Entering numbers 242
Global voice commands 242
Improving speech quality 243
Language setting 242
Media player voice commands 250
Message voice commands 252
Multifunction steering wheel (operating) 240
Navigation voice commands 245
Operable functions 242
Operating safety 240
Radio voice commands 249
Switch voice commands 243
Telephone voice controls 248
Text message voice commands 252
Types of voice commands 242
Vehicle voice commands 253
Voice prompting 241
Live Traffic Information
Displaying subscription information 314
Displaying the traffic map 315
Displaying traffic incidents 316
Extending a subscription 315
Registering on Mercedes me 314
Showing local area messages 317
Switching the traffic information display on 316
Load compartment cover
Fitting/removing 103
Loading
Bag hook 106
Notes 98
Roof rack 107
Stowage space underneath the load compartment floor 106
Loading guidelines 98
Loads
Securing 98
Locator lighting
Switching on/off 124
Locking/unlocking 73
Additional door lock 68
Digital Car Key sticker 69
KEYLESS-GO 70
Mobile phone 69
Smartphone 69
Unlocking/opening the doors from the inside 69
Lubricant additives
see Additives
Luggage
Securing 98
Lumbar support
see Lumbar support (4-way)
Lumbar support (4-way) 90

M

Main beam
Activating/deactivating 118
Adaptive Highbeam Assist 121
Adaptive Highbeam Assist Plus 122
Changing bulbs 127
Maintenance
see ASSYST PLUS

Malfunction
Restraint system 31
Map 315, 320
Avoiding an area 323
Avoiding an area (overview) 322
Changing an area 323
Deleting an area 323
Displaying Qibla 325
Displaying the compass 325
Displaying the map version 322
Displaying the next intersecting street 322
Displaying the satellite map 325
Displaying the traffic map 315
Displaying weather information 326
Map data 324
Moving 320
Selecting POI symbols 321
Selecting text information 322
Selecting the map orientation 321
Setting the map scale 320
Setting the map scale automatically 325
Showing in the multifunction display of the instrument cluster 326
Showing the range 325
Switching motorway information on/off 322
Updating 324
Massage programs
Selecting the front seats 92
Matt finish (cleaning instructions) 383
Maximum gross vehicle weight 431
Maximum speed
see Limiter
MBUX multimedia system 256
Overview 256
Mecca 325
Media
Menu (on-board computer) 237
Media mode
Adding a favourite song 366
Connecting Bluetooth audio equipment 365
Connecting USB devices 365
Controlling media playback 366
Copyright and trademarks 362
Information about media search 367
Making video settings 368
Overview of the media menu 364
Playing back similar music tracks 366
Removing a favourite song 366
Searching for a music track according to mood 368
Starting media playback 366
Starting the media search 367
Supported format and data storage media 361
Using the keyword search 368
Media playback
Operating (on-board computer) 237
Media source
Dialling (on-board computer) 237
Memory function
Head-up display – Calling up stored settings 97
Head-up display –Storing settings 97
Operating 97
Outside mirror – Calling up stored settings 97
Outside mirror –Storing settings 97
Seat – Calling up stored settings 97
Seat –Storing settings 97

Menu (on-board computer)
Assistant display ... 233
Designs ... 239
Head-up display ... 238
Media ... 237
Navigation ... 235
Overview ... 229
Radio ... 236
Service ... 232
Telephone ... 237
Trip ... 233

Mercedes me
Calling up services ... 349
Calling up your user account ... 349
Deleting a connection ... 349
Information ... 348

Mercedes me connect
Accident management ... 347
Calling the Mercedes-Benz Customer Centre ... 346
Consenting to data transfer ... 348
Information ... 345
Service call with the me button ... 347
Service message ... 347
Transferred data ... 348

Mercedes-Benz emergency call system ... 349
Automatic emergency call ... 350
Information ... 349
Manual emergency call ... 351
Overview ... 349
Self-diagnosis ... 352
Starting/ending ERA-GLONASS test mode ... 352
Transferred data ... 351

Mercedes-Benz Service Centre
see Qualified specialist workshop

Message (multifunction display)
see Display message

Message memory ... 443

Messages ... 339
Calling a message sender ... 340
Composing ... 339
Configuring the displayed text messages ... 339
Deleting ... 341
Forwarding ... 340
Overview ... 339
Read-aloud function ... 339
Reading ... 339
Replying ... 340
Sending ... 339
Using a number/URL ... 340
Using templates ... 340

Mirrors
see Outside mirrors

Mobile phone
Cancelling permission for Internet connection ... 354
Damage detection (parked vehicle) ... 167
Frequencies ... 430
Locking the vehicle ... 69
Starting the vehicle ... 142
Transmission output (maximum) ... 430
Unlocking the vehicle ... 69
Wireless charging ... 114

Mobile phone
see Android Auto
see Apple CarPlay™
see Telephone

Mobile phone voice recognition
Starting ... 333
Stopping ... 333

Model series 431
MOExtended tyres 390
Moods
Calling up 267
Creating 267
Deleting 268
Displaying information (DIBA) 269
Modifying 268
Moving 268
Overview 267
Motorway mode 120
MULTIBEAM LED
see Intelligent Light System
Multifunction display
Setting 230
Multifunction display (on-board computer) 231
Multifunction steering wheel
Overview of buttons 228
Multifunction steering wheel
see Steering wheel
Multimedia system 281
Activating/deactivating standby mode 168
Adjusting the volume 276
Central control elements 259
Configuring display settings 281
Main functions 263
Restoring the factory settings 289
Switching the sound on/off 275
Multimedia system
see MBUX multimedia system

N

Navigation
Menu (on-board computer) 235
Showing/hiding the menu 292
Switching on 291
Updating the map data 324
Voice commands (LINGUATRONIC) 245
Navigation
see Destination
see Destination entry
see Route
see Route guidance
see Traffic information
Navigation announcements
Activating/deactivating 310
Adjusting the volume 310
Repeating 311
Switching audio fadeout on/off 310
Switching on/off during a phone call .. 310
Navigation messages
On-board computer 235
Near Field Communication (NFC) 332
Connecting the mobile phone to the multimedia system 332
Locking the vehicle (digital vehicle key sticker) 69
Locking the vehicle (mobile phone) 69
Starting the vehicle (Digital Vehicle Key sticker) 142
Starting the vehicle (mobile phone) 142
Switching mobile phones 332
Unlocking the vehicle (digital vehicle key sticker) 69
Unlocking the vehicle (mobile phone) 69
Neutral
Selecting 152

NFC
see Near Field Communication (NFC)

Notifications Centre
Calling up a notification 273
Editing a notification 274
Global search 274
Notification types 272
Overview 272
Selecting actions for a notification 273
Using the global search 274

Notifications Centre
see Notifications types

Notifications types 272

O

Occupant safety
Pets in the vehicle 62

Occupant safety
see Airbag
see Automatic front passenger front airbag deactivation system
see PRE-SAFE® (anticipatory occupant protection)
see PRE-SAFE® PLUS (anticipatory occupant protection plus)
see Restraint system
see Seat belt

Odometer
see Total distance

Oil
see Engine oil

On-board computer
Assistant display menu 233
Displaying the service due date 374
Head-up Display menu 238
Media menu 237
Menu designs 239
Menu overview 229
Multifunction display 231
Navigation menu 235
Operating 229
Radio menu 236
Service menu 232
Telephone menu 237
Trip menu 233

On-board diagnostics interface
see Diagnostics connection

On-board electronics
Engine electronics 429
Notes 429
Two-way radios 429

Open-source software 29

Operating fluids
AdBlue® 436
Brake fluid 438
Coolant (engine) 438
Fuel (petrol) 434
Notes 433

Operating safety
Declaration of Conformity (electromagnetic compatibility) 23
Declaration of conformity (jack) 23
Declaration of conformity (TIREFIT kit) .. 24
Declaration of conformity (wireless vehicle components) 23
Information 22

Operating system
On-board computer 229

Outside mirrors 131, 132
Anti-dazzle mode (automatic) 132
Automatic mirror folding function 133

Folding in/out 131
Parking position 132
Setting 131
Using the memory function 97

Overhead control panel
Overview 12

Owner's Manual
Vehicle equipment 22

Owner's Manual (digital) 18

P

Paint code 431

Paintwork (cleaning instructions) 383

Panic alarm 65
Activating/deactivating 65

Panoramic sliding sunroof
see Sliding sunroof

Park position
Selecting 152
Selecting automatically 152

Parking
see Electric parking brake

Parking (navigation service)
Selecting parking options 326
Showing a parking option on the map 327

Parking aid
see Parking Assist PARKTRONIC

Parking Assist
Manoeuvring assistance 211

Parking Assist PARKTRONIC 195
Activating 198
Adjusting warning tones 198
Deactivating 198
Function 195
Side impact protection 197
System limitations 195

Parking assistance systems
see Active Parking Assist

Parking brake
see Electric parking brake

Parking lights 116

Parking position
Outside mirrors 132
Storing the position of the passenger outside mirror using reverse gear 133

Parking up 167

Partition net
Attaching 103

PASSENGER AIR BAG status display
see Automatic front passenger front airbag deactivation system

Pedestrian protection
see Active bonnet (pedestrian protection)

Period out of use
Activating/deactivating standby mode 168

Permissible axle load 431

Permitted towing methods 400

Petrol 434

Pets in the vehicle 62

Phone book
see Contacts

PIN protection
Activating/deactivating 287

Plastic trim (Care) 386

POI symbols
Custom 321
Power supply
Switching on (Start/Stop button) 140
Power windows
see Side windows
PRE-SAFE® (anticipatory occupant protection) 44
Function 44
PRE-SAFE® Sound 44
Reversing measures 44
PRE-SAFE® PLUS (anticipatory occupant protection plus) 44
Function 44
Reversing measures 44
Preventative occupant protection system
see PRE-SAFE® (anticipatory occupant protection)
Previous destinations
Selecting 296
Profile
Creating a new profile 265
Maximum number of profiles 264
Notes 264
Overview 264
Selecting a profile 266
Selecting profile options 265
Showing the profile selection when entering 266
Synchronising 266
Profile
see User profile
Programs
see DYNAMIC SELECT
Protection of the environment
Notes 20
Take-back of end-of-life vehicles 20

Q

Qibla 325
QR code
Rescue card 26
Qualified specialist workshop 25

R

Radar sensors 168
Radio
Activating/deactivating radio text 371
Calling up a slide show 371
Calling up the station list 370
Deleting stations 370
Displaying information 371
Displaying radio text 371
Editing station presets 370
Entering a frequency directly 370
Frequency fix 371
Menu (on-board computer) 236
Moving stations 370
Overview 369
Searching for stations 370
Setting a station 370
Setting a voice tag 371
Setting station tracking 371
Setting the frequency band 370
Setting the traffic information service volume increase 371
Storing radio stations 370
Switching on 368

Switching traffic announcements on/off ... 371
Voice commands (LINGUATRONIC) ... 249

Radio stations
Selecting (on-board computer) ... 236

Rain-closing feature
Sliding sunroof ... 81

Range
Displaying ... 233

Reading light
see Interior lighting

Real wood (Care) ... 386

Rear door (child safety lock) ... 61

Rear fog light ... 117

Rear seat
see Seat

Rear seat belt
Status display ... 36

Rear seat belt status display ... 36

Rear window
Changing the wiper blade ... 130

Rear window heater ... 135

Rear window wipers
Activating/deactivating ... 128

Rear-view mirror
see Outside mirrors

Recycling
see Take-back of end-of-life vehicles

Reducing agent
see AdBlue®

Refuel
Refuelling the vehicle ... 154

Refuelling
Topping up AdBlue® ... 158

Registration
Vehicle ... 26

Remote Online
Charging the battery ... 144
Cooling or heating the vehicle interior ... 144
Starting the vehicle ... 144

Replacing a bulb
see Changing bulbs

Replacing the battery (vehicle)
see 12 V battery

Replacing the vehicle battery
see 12 V battery

Rescue card ... 26

Reserve
Fuel ... 436

Reset function (multimedia system) ... 289

Residual heat ... 138

Restoring (factory settings)
see Reset function (multimedia system)

Restraint system ... 30
Children ... 45
Function in an accident ... 31
Functionality ... 31
Malfunction ... 31
Protection ... 30
Reduced protection ... 30
Self-test ... 31
Warning lamp ... 31

Reverse gear
Selecting ... 152

Reversing camera ... 199
Care ... 384
Function ... 199

Opening the camera cover (360° Camera) ... 205
Setting as a favourite (360° Camera) ... 205
Switching automatic operation on/off (360° Camera) ... 205

Reversing lights (changing bulbs) ... 127

Rims (Care) ... 384

Roll away protection
see HOLD function

Roof lining (care) ... 386

Roof load ... 440

Roof rack ... 107

Route ... 299, 304
Accepting a detour recommendation after a prompt ... 317
Activating a commuter route ... 304
Calculating ... 299
Displaying destination information ... 302
Displaying the route list ... 304
Editing a stored route ... 306
External ... 312
Recording a route ... 306
Saving a recorded route ... 306
Selecting a type ... 300
Selecting an alternative route ... 304
Selecting notifications ... 302
Selecting options ... 301
Showing a stored route on the map ... 305
Starting a saved route ... 306
Starting the automatic service station search ... 305
Switching the automatic filling station search on/off ... 304
With intermediate destinations ... 303

Route guidance ... 307
Cancelling ... 311
Changing direction ... 307
Destination reached ... 310
From an off-road location ... 311
Lane recommendations ... 309
Motorway information ... 309
Notes ... 307
Off-road ... 311
To an off-road destination ... 311

Route guidance with augmented reality
Activating ... 318
Displaying street names and house numbers ... 319
Selecting a POI ... 319
Showing traffic lights ... 319
Switching on display of POIs ... 318

Route-based speed adaptation ... 187

Route-based speed adjustment
Displays in the Instrument Display ... 192

Run-flat characteristics
MOExtended tyres ... 390

Running-in notes ... 145

S

Safety systems
see Driving safety system

Safety vest ... 388

Satellite map ... 325

Seat ... 101
4-way lumbar support ... 90
Adjusting (electrically) ... 90
Adjusting (Seat Comfort) ... 89
adjustment (without Seat Comfort Package) ... 87

Backrest (rear) locking 102
Configuring the settings 92
Correct driver's seat position 86
Folding the backrest (rear) back 102
Folding the backrest (rear) forwards 101
Resetting the settings 92
Selecting a massage program 92
Setting options 14
Using the memory function 97

Seat
see Head restraint

Seat belt 32, 36
Activating/deactivating seat belt adjustment 36
Care 386
Fastening 35
Protection 32
Rear seat belt status display 36
Reduced protection 33
Releasing 36
Seat belt adjustment (function) 35
Warning lamp 36

Seat belt adjustment
Activating/deactivating 36
Function 35

Seat belt tensioners
Activation 31

Seat belt warning
see Seat belt

Seat cover (Care) 386

Seat heater
Activating/deactivating 93

Seat ventilation
Activating/deactivating 94

Selecting a gear
see Shifting gears

Selecting a POI
see Destination entry

Selector lever
see DIRECT SELECT lever

Self-test
Automatic front passenger front air-bag deactivation system 41

Sensors (Care) 384

Service
Menu (on-board computer) 232

Service
see ASSYST PLUS

Service Centre
see Qualified specialist workshop

Service interval display
see ASSYST PLUS

Service product
Engine oil 437

Service products
Additives (fuel) 434
Fuel (diesel) 435
Windscreen washer fluid 439

Setting a speed
see Cruise control:

Setting the date format 282

Setting the distance unit 286

Setting the map scale
see Map

Shifting gears 152
Gearshift recommendation 153
Manual 152

Short messages
see Messages

Side impact airbag 37
Side impact protection 197
Side windows 75
Child safety lock in the rear 62
Closing 75
Closing using the key 77
Convenience closing 76
Convenience opening 76
Opening 75
Opening with the key 76
Problem 77
Sliding sunroof 78
Automatic features 81
Closing 78
Closing using the key 77
Opening 78
Opening with the key 76
Problem 82
Rain-closing feature 81
Smartphone
Locking the vehicle 69
Unlocking the vehicle 69
Smartphone
see Android Auto
see Apple CarPlay™
see Telephone
Snow chains 409
Socket (12 V) 111
Front centre console 111
Socket (230 V) 112
Rear passenger compartment 112
Software update
Important system updates 289
Information 288
Performing 288
Sound
PRE-SAFE® Sound 44
wheels and tyres 408
Sound
see Burmester® surround sound system
see Tone settings
Sound settings
Adjusting the balance/fader 372
Adjusting treble, mid-range and bass settings 372
Automatic volume adjustment 372
Spare wheel
see Emergency spare wheel
Spectacles compartment 100
Speech dialogue system
see LINGUATRONIC
Speed Limit Assist 213
Function/notes 213
Speed limitation for winter tyres
Setting 182
Speedometer
Digital 233
Standby mode
Activating/deactivating 168
Function 167
Standing lights 116
Start/stop button
Starting the vehicle 141
Switching off the vehicle 160
Switching on the power supply or ignition 140
Start/stop function
see ECO start/stop function

Starting assistance
see Jump-start connection
Starting the engine
see Vehicle
Starting-off aid
see Hill Start Assist
Station
Deleting ... 370
Entering a frequency directly ... 370
Frequency fix ... 371
Moving ... 370
Searching ... 370
Setting ... 370
Storing ... 370
Station list
Calling up ... 370
Station presets
Editing ... 370
STEER CONTROL
Function/notes ... 173
Steering wheel ... 228
Adjusting (manually) ... 94
Buttons ... 228
Steering wheel heater ... 95
Steering wheel gearshift paddles ... 152
Steering wheel heater
Activating/deactivating ... 95
Stowage areas
see Laden
see Stowage compartment
Stowage compartment ... 99
Armrest ... 99
Centre console ... 99
Door ... 99
Glove box ... 99
Spectacles compartment ... 100
Stowage compartments
see Laden
see Stowage compartment
Stowage space underneath the load compartment floor ... 106
Suggestions
Calling up ... 269
Configuring ... 269
Deleting ... 270
Overview ... 269
Renaming ... 270
Sulphur content ... 434
Sun visor
Operating ... 134
Surround View
see 360° Camera
Switch-off delay time
Exterior ... 123
Interior ... 125
Switching the surround sound on/off
Burmester® surround sound system ... 373
Synchronisation function
Activating/deactivating (multimedia system) ... 137
Switching on/off (control panel) ... 137
System settings
Language ... 286
Notes on language selection ... 286
Reset function (multimedia system) ... 289
Setting the distance unit ... 286
Software update ... 288
System settings
see Multimedia system

T

Tailgate 73
Closing 74
Opening 73
Opening dimensions 440
Unlocking (emergency key) 74

Tailgate
see Locking/unlocking

Take-back of end-of-life vehicles 20
Protection of the environment 20

Tank capacity
AdBlue® 437
Fuel 436
Reserve (fuel) 436

Technical data
Axle load (trailer operation) 442
Fastening point (trailer hitch) 441
Information 429
Mounting dimensions (trailer hitch) 441
Notes (trailer hitch) 441
Overhang dimension (trailer hitch) 441
Tongue weight 442
Towing weight (towing a trailer) 441
Tyre pressure monitoring system 413
Vehicle identification plate 431

Telephone 237, 328
Activating functions during a call 333
Calls with several participants 334
Changing a function 331
Connecting a mobile phone (Near Field Communication (NFC)) 332
Connecting a mobile phone (Passkey) 330
Connecting a mobile phone (Secure Simple Pairing) 330
Disconnecting a mobile phone 331
Importing contacts 336
Incoming call during an existing call 334
Information 330
Interchanging mobile phones 331
Locking the vehicle (mobile phone) 69
Menu (on-board computer) 237
Mobile phone voice recognition 333
Notes 329
Operating modes 329
Reception and transmission volume 332
Ringtone volume 332
Starting the vehicle (mobile phone) 142
Switching mobile phones (Near Field Communication (NFC)) 332
Telephone menu overview 328
Telephone operation 333
Unlocking the vehicle (mobile phone) 69
Using Near Field Communication (NFC) 332
Voice commands (LINGUATRONIC) 248
Wireless charging (mobile phone) 114

Telephone number
Dialling (on-board computer) 237

Telephone operation
see Calls

Telephony operating modes
Bluetooth® Telephony 329
Business telephony 329

Temperature 135

Text messages
Voice commands (LINGUATRONIC) 252

Text messages
see Messages

Through-loading feature
see Seat

Tie-down eyes 105
Time
Manual time setting 282
Setting the time and date automatically 282
Setting the time zone 282
Setting the time/date format 282
TIREFIT kit
Declaration of conformity 24
Using 391
Tone settings 371
Calling up the sound menu 372
Information 371
Tongue weight 442
Top Tether 50
Total distance 233
Displaying 233
Touch Control
On-board computer 229
Operating 259
Setting acoustic operating feedback ... 260
Setting the sensitivity 260
Touchpad
Activating/deactivating haptic operating feedback 262
Operating 261
Reading the handwriting recognition aloud 262
Selecting a station and track 262
Setting acoustic operating feedback ... 262
Setting the sensitivity 262
Touchscreen
Entering characters 279
Touchscreen (multimedia system display)
Operating 260
Tow-away protection
Activating/deactivating 84
Function 84
Tow-bar system 226
Tow-starting 404
Towing away 401
Towing eye
Installing 404
Storage location 403
Towing methods 400
Traffic announcements
Activating/deactivating 371
Traffic information 313
Displaying the traffic map 315
Displaying traffic incidents 316
Live Traffic Information 314
Overview 313
Traffic information service volume increase
Setting 371
Traffic map
see Map
Traffic Sign Assist 214
Function/notes 214
Setting 216
System limitations 214
Trailer hitch
Axle load 442
Bicycle rack 224
Fastening point 441
Folding the ball neck in/out 221
General notes 441
Mounting dimensions 441

Notes 221
Overhang dimension 441
Power socket 223
Tongue weight 442

Trailer operation
Active Blind Spot Assist 217
Bicycle rack 224
Coupling up/uncoupling a trailer 223
Folding the ball neck in/out 221
Notes 221
Power socket 223

Trailer stabilisation
Function/notes 173

Trailer tow hitch
Care 384
Towing weight 441

Transferred vehicle data
Android Auto 345
Apple CarPlay™ 345

Transmission position display 150

Transporting
Vehicle 403

Trim element (Care) 386

Trip
Menu (on-board computer) 233

Trip computer
Displaying 233
Resetting 234

Trip distance 233
Displaying 233
Resetting 234

Trip meter
see Trip distance

Turn signal indicator
see Turn signal light

Turn signal light 118
Activating/deactivating 118

Turn signal lights
Changing bulbs (rear) 127

Two-way radios
Frequencies 430
Notes on installation 429
Transmission output (maximum) 430

Tyre pressure
Checking (tyre pressure monitoring system) 412
Notes 409
Restarting the tyre pressure loss warning system 417
Restarting the tyre pressure monitoring system 412
TIREFIT kit 391
Tyre pressure loss warning system (function) 417
Tyre pressure monitoring system (function) 411
Tyre pressure table 410

Tyre pressure loss warning system
Function 417
Restarting 417

Tyre pressure monitor
Checking the tyre pressures 412
Checking the tyre temperature 412
Function 411

Tyre pressure monitoring system
Restarting 412
Technical data 413

Tyre pressure table 410

Tyre temperature
Checking (tyre pressure monitoring system) ... 412
Tyre pressure monitoring system (function) ... 411
Tyre tread ... 408
Tyre-change tool kit
Overview ... 421
Tyres
Changing hub caps ... 422
Checking ... 408
Checking the tyre pressure (tyre pressure monitoring system) ... 412
Fitting ... 425
Flat tyre ... 390
MOExtended tyres ... 390
Noise ... 408
Notes on fitting ... 418
Removing ... 425
Replacing ... 418, 422
Restarting the tyre pressure loss warning system ... 417
Restarting the tyre pressure monitoring system ... 412
Selection ... 418
Snow chains ... 409
Storing ... 421
TIREFIT kit ... 391
Tyre pressure (Notes) ... 409
Tyre pressure loss warning system (function) ... 417
Tyre pressure monitoring system (function) ... 411
Tyre pressure table ... 410
Unusual handling characteristics ... 408

U

Units of measurement
Setting ... 286
Unlocking setting ... 65
USB port ... 113
User profile ... 264

V

Vehicle ... 141, 143, 144
Activating/deactivating standby mode ... 168
Additional door lock ... 68
Correct use ... 26
Damage detection (parking) ... 167
Data acquisition ... 27
Diagnostics connection ... 25
Equipment ... 22
Implied warranty ... 26
Locking (automatically) ... 72
Locking (digital vehicle key sticker) ... 69
Locking (emergency key) ... 72
Locking (from the inside) ... 69
Locking (KEYLESS-GO) ... 70
Locking (mobile phone) ... 69
Lowering ... 426
Parking up ... 167
QR code rescue card ... 26
Qualified specialist workshop ... 25
Raising ... 423
Registration ... 26
Starting (Digital Vehicle Key sticker) ... 142
Starting (emergency operation mode) ... 143
Starting (mobile phone) ... 142
Starting (Remote Online) ... 144
Starting (start/stop button) ... 141
Switching off (start/stop button) ... 160
Towing ... 226
Unlocking (digital vehicle key sticker) ... 69

Unlocking (from the inside) 69
Unlocking (KEYLESS-GO) 70
Unlocking (mobile phone) 69
Ventilating (convenience opening) 76
Voice commands (LINGUATRONIC) 253

Vehicle data
Displaying (DYNAMIC SELECT) 150
Roof load 440
Vehicle height 440
Vehicle length 440
Vehicle width 440
Wheelbase 440

Vehicle data storage
Electronic control units 27
Service providers 28

Vehicle dimensions 440

Vehicle identification number
see VIN

Vehicle identification plate
EU general operating permit number ... 431
Maximum gross vehicle weight 431
Paint code 431
Permissible axle load 431
VIN 431

Vehicle identification plate
see Model series

Vehicle interior
Cooling or heating (Remote Online) 144

Vehicle key
see Key

Vehicle maintenance
see ASSYST PLUS

Vehicle position
Transmitting 283

Vehicle tool kit
Towing eye 403

Ventilating
Convenience opening 76

Ventilation
see Climate control

Vents
see Air vents

VIN 431
Engine compartment 431
Identification plate 431
Windscreen 431

Vision
Demisting windows 137

Voice command types (LINGUATRONIC) 242

Voice control system
see LINGUATRONIC

W

Warning lamp
see Warning/indicator lamps

Warning system
see ATA (anti-theft alarm system)

Warning triangle
Removing 388
Setting up 389

Warning/indicator lamp
ABS warning lamp 500
Brake system warning lamp (red) 499
Brake system warning lamp (yellow) 498
Coolant warning lamp 509

Distance warning warning lamp .. 505
Electrical fault warning lamp 508
Engine diagnosis warning lamp ... 508
ESP® OFF warning lamp 502
ESP® warning lamp flashes 501
ESP® warning lamp lights up 501
Fuel reserve warning lamp 508
Power steering system warning lamp 507
Red indicator lamp, electric parking brake applied 503
Restraint system warning lamp ... 504
Seat belt warning lamp flashes ... 505
Seat belt warning lamp lights up 504
Trailer hitch warning lamp 506
Tyre pressure monitoring system warning lamp flashes 512
Tyre pressure monitoring system warning lamp lights up 511
Yellow electric parking brake indicator lamp is malfunctioning 503

Warning/indicator lamps 496
Instrument display (overview) 8
Overview 496
PASSENGER AIR BAG 41

Warranty 26

Washer fluid
see Windscreen washer fluid

Washing by hand (care) 382

Weather information 326

Web browser
Calling up a web page 355
Calling up options 358
Calling up the settings 358
Deleting a bookmark 358
Deleting Internet history 358
Ending 359
Managing bookmarks 358
Overview 357

Website
Calling up 355

Wheel change
Fitting a new wheel 425
Lowering the vehicle 426
Preparation 422
Raising the vehicle 423
Removing a wheel 425
Removing/fitting hub caps 422

Wheel change
see Emergency spare wheel

Wheel chock
see Chock

Wheel rotation 421

Wheels
Care 384
Changing hub caps 422
Checking 408
Checking the tyre pressure (tyre pressure monitoring system) 412
Fitting 425
Flat tyre 390
Interchanging 421
MOExtended tyres 390
Noise 408
Notes on fitting 418

Removing 425
Replacing 418, 422
Restarting the tyre pressure loss warning system 417
Restarting the tyre pressure monitoring system 412
Selection 418
Snow chains 409
Storing 421
TIREFIT kit 391
Tyre pressure (Notes) 409
Tyre pressure loss warning system (function) 417
Tyre pressure monitoring system (function) 411
Tyre pressure table 410
Unusual handling characteristics 408

Wi-Fi
Overview 283
Setting 284
Setting up a hotspot 285
Setting up an Internet connection 353

Windowbag 37

Windows
see Side windows

Windows (Care) 384

Windscreen 128, 135
Demisting 135
Replacing the wiper blades 128

Windscreen
see Windscreen

Windscreen washer fluid 439
Notes 439

Windscreen washer system
Topping up 380

Windscreen wipers
Activating/deactivating 127
Replacing the wiper blades 128

Winter operation
Snow chains 409

Winter tyres
Setting the permanent speed limitation 182

Wiper blades
Care 384
Replacing 128

Wireless charging
Function/notes 113
Mobile phone 114

Wireless vehicle components
Declaration of conformity 23

Workshop
see Qualified specialist workshop

Publication details

Internet
Further information about Mercedes-Benz vehicles and about Daimler AG can be found on the following websites:

http://www.mercedes-benz.com

http://www.daimler.com

Editorial office
You are welcome to forward any queries or suggestions you may have regarding this Owner's Manual to the technical documentation team at the following address:

Daimler AG, HPC: CAC, Customer Service,
70546 Stuttgart, Germany

©Daimler AG: Not to be reprinted, translated or otherwise reproduced, in whole or in part, without written permission from Daimler AG.

Vehicle manufacturer
Daimler AG

Mercedesstrasse 137

70327 Stuttgart

Germany

As at 12.06.17

Digital – in the vehicle

Familiarise yourself with the contents of the Owner's Manual directly via the vehicle's multimedia system (menu item "Vehicle information"). Start with the quick guide or broaden your knowledge with practical tips.

Vehicle document wallet

Here you can find comprehensive information about operating your vehicle and about services and guarantees in printed form.

Digital – on the Internet

You can find the Owner's Manual on the Mercedes-Benz homepage.

Digital – as an App

The Mercedes-Benz Guides App is available free-of-charge in familiar App stores.

1775844400Z102

Order no. P177 0027 02 Part no. 177 584 44 00 Z102
Edition NA2018-04a

Apple® iOS

Android™