ENGLISH.....5

SUMMARY

1 Revision of the Manual.....5
INTRODUCTION.....6
2 LEGEND OF THE SYMBOLS USED.....7
3 SAFETY RULES.....8
3.1 Glossary.....8
3.2 General Rules.....8
3.3 Operator Safety.....9
3.4 Tool Safety.....10
3.5 Disclaimer.....11
4 OPERATION OF THE RADIO DEVICES.....12
5 ENVIRONMENTAL INFORMATION.....13
6 NORMATIVE INFORMATION.....14
7 NAVIGATOR TXT MULTIHUB.....16
8 DESCRIPTION.....18
9 TECHNICAL FEATURES.....19
10 DISPLAY.....22
10.1 Communication.....22
10.2 Battery.....22
10.3 Status.....23
10.4 Other Messages.....24
11 POWER SUPPLY.....25
11.1 Power Supply from Vehicle Battery.....25
11.1.1 OBD socket.....26
11.1.2 Battery Cable.....27
11.1.3 Power Supply Cable.....28
11.1.4 Cigar lighter cable.....30
12 POWER ON/OFF 31
12.1 Power on.....31
12.2 Boot down.....32
13 COMMUNICATION 33
13.1 Wi-Fi.....34
13.2 Bluetooth.....36

13.3 Network Cable.....36
13.4 USB 37
14 DIAGNOSIS.....39
14.1 DoIP diagnosis.....40
14.2 STANDARD diagnosis.....42
14.3 Pass-Thru.....43
14.4 Dynamic Tests.....45
14.5 Disconnection at the End of a Diagnosis.....49
15 FIRMWARE UPDATE.....50
16 MAINTENANCE.....51
17 TROUBLESHOOTING.....52
18 LEGAL NOTICES.....55

NAVIGATOR TXT MULTIHUB TECHNICAL MANUAL

1 Revision of the Manual

This document is the technical manual for the product:NAVIGATOR TXT MULTIHUB
Document Review Number:05
Date of Issue:15/03/2021

INTRODUCTION

Dear Customer,

We would like to thank you for choosing a TEXA product for your workshop.

We are certain that you will get the greatest satisfaction from it and receive a great deal of help in your work.

Please read through the instructions in this manual carefully and keep it for future reference.

Reading and understanding the following manual will help you to avoid damage or personal injury caused by improper use of the product to which it refers.

TEXA S.p.A reserves the right to make any changes deemed necessary to improve the manual for any technical or marketing requirement; the company may do so at any time without prior notice.

This product is intended for use by technicians specialized in the automotive field only. Reading and understanding the information in this manual cannot replace adequate specialized training in this field.

The sole purpose of the manual is to illustrate the operation of the product sold. It is not intended to offer technical training of any kind and technicians will therefore carry out any interventions under their own responsibility and will be accountable for any damage or personal injury caused by negligence, carelessness, or inexperience, regardless of the fact that a TEXA S.p.A. tool has been used based on the information within this manual.

Any additions to this manual, useful in describing the new versions of the program and new functions associated to it, may be sent to you through our TEXA technical bulletin service.

This manual should be considered an integral part of the product to which it refers. In the case it is resold the original buyer is therefore required to forward the manual to the new owner.

Reproduction, whole or in part, of this manual in any form whatsoever without written authorization from the producer is strictly forbidden.

The original manual was written in Italian, every other language is a translation of the original manual.

© copyright and database rights 2020. The material contained in this publication is protected by copyright and database rights. All rights are reserved by law and under international conventions.

2 LEGEND OF THE SYMBOLS USED

	Toxic material hazard		Risk of crushing hands
	Explosive material hazard		Floor level obstacle warning
	Electric shock hazard		Laser beam hazard
	Electromagnetic field hazard		Low temperature danger - freezing
	Flammable material hazard		General Risk
	Hot surface hazard		Obligation to read the instructions
	Corrosive substance hazard		Safety glasses required
	Risk of noise level above 80 dbA		Protective gloves required
	Moving Parts Risk		Disconnect mains plug from electrical outlet

DANGER	This is not a safety symbol. It indicates a hazardous situation which, if not avoided, will result in serious permanent injury or death.
WARNING	This is not a safety symbol. It indicates a hazardous situation which, if not avoided, may result in serious permanent injury or death.
CAUTION	This is not a safety symbol. It indicates a hazardous situation which, if not avoided, may result in minor injury.
NOTICE	This is not a safety symbol. It indicates a hazardous situation which, if not avoided, may result in material damage.
INFORMATION	This is not a safety symbol. It indicates important information.

3 SAFETY RULES

The technology used for the design and manufacturing control of the **NAVIGATOR TXT MULTIHUB** diagnostic tool makes it reliable, simple and safe to use.

The personnel in charge of using the diagnostic tools are required to follow the general safety rules and to use the **NAVIGATOR TXT MULTIHUB** device for its intended use only and to carry out the maintenance as described in this manual.

All the requirements based on the following must be assessed and applied:

- *Labour inspectorate.*
- *Trade associations.*
- *Vehicle manufacturers.*
- *Anti-pollution regulations.*

3.1 Glossary

Operator:qualified person responsible for using the diagnostic tool.

Tool:NAVIGATOR TXT MULTIHUB

INFORMATION

The definition of "operator" cannot be applied to minors or to people with reduced physical, sensory or mental capabilities or without any experience or knowledge required.

3.2 General Rules

The operator must have carefully read and fully understood all the information and instructions in the technical documents provided with the tool.If the operator is not able to read this manual, the operating instructions and safety indications must be read and discussed in the operator's native language.

- *The operator that works on vehicles must have basic qualifications and knowledge of mechanics, automotive engineering, vehicle repairing and of the potential dangers that may arise during self-diagnosis operations.*
- *The operator must be completely clear-headed and sober when using the device; taking drugs or alcohol before or when operating the tool is strictly forbidden.*
- *The operator must follow all the instructions provided in the technical documents.*
- *The operator is required to wear adequate personal protective equipment (PPE) throughout the use of the tool.*
- *The operator must monitor the tool during the operating phases wherever this is possible in compliance with the safety measures indicated below.*
- *The operator must periodically check the electrical connections of the tool, making sure they are in good condition and immediately replacing any damaged cables.*
- *The operator must periodically check the parts that are subject to wear and replace them if necessary, using only original spare parts or spare parts approved by the manufacturer.*
- *The operator must stop using the tool immediately should any failure occur, and promptly contact the technical assistance.*
- *Contact your retailer for extraordinary maintenance operations.*

- *Do not remove or damage the labels and the warnings on the tool; do not in any case make them illegible.*
- *Do not remove or tamper with any safety devices the tool is equipped with.*

3.3 Operator Safety

WARNING

The airbags inflate with great force.

In case of explosion, a device located in the airbag's expansion area will be thrown with force causing severe damages and injuries.

Safety Measures:

- *Do not place the tool in the airbags' expansion areas.*

WARNING

Some self-diagnosis operations allow you to activate/ deactivate certain actuators and safety systems on the vehicle.

Failure to reactivate the actuators and safety systems properly or at all may be a safety risk for the vehicle user.

Safety Measures:

- *In order to avoid injuring people and/or damaging the device or the electronic systems of the vehicle connected to the device, do not allow unqualified personnel to use the device.*
- *Follow the instructions supplied by the software thoroughly.*

CAUTION

The tool was designed to be electrically safe and to work with specific supply voltage levels.

Improper use may expose the operator to the risk of electric shock, even though of low intensity.

Safety Measures:

- *Wear adequate personal protective equipment during all the operating phases.*
- *Do not handle or touch the tool or any accessories (e.g. cables) with wet hands.*

WARNING

The current used during the operating phases generates electromagnetic fields (EMF) near the tool.

Even though of low intensity, these fields may interfere with medical prostheses, such as pacemakers.

Safety Measures:

- *Keep away from the tool after launching the operating phases.*
- *If you have a medical prosthesis (e.g.: pacemaker), check with your doctor as to the appropriateness of using the tool or being near it.*

3.4 Tool Safety

NOTICE

The tool was designed to be used in specific environmental conditions.

Using the tool in environments with temperature and humidity values that differ from those specified may impair its efficiency.

Safety measures:

- *Put the tool in a dry area.*
- *Do not expose or use the tool near heat sources.*
- *Put the tool where it can be properly ventilated.*
- *Do not use corrosive chemicals, solvents or harsh detergents to clean the tool.*
- *When not in use, always protect the connectors by closing them with the specific protective caps.*

NOTICE

The tool was designed to be mechanically sturdy and suitable for use in the workshop.

Careless use and excessive mechanical strain may impair its efficiency.

Safety measures:

- *Do not drop, shake or bump the tool.*
- *Do not place the tool where it could fall into water. Avoid any contact with water.*
- *Do not place objects over the cables nor bend them.*
- *Do not perform any kind of intervention that may damage the tool.*
- *Do not open or disassemble the tool.*
- *When not in use, always protect the connectors by closing them with the specific protective caps.*
- *Do not force the connector protective caps.*
- *Before closing the connector protective caps, make sure there are no foreign bodies (e.g.: dirt) between the cap and the connector.*

NOTICE

The tool was designed to be electrically safe and to work with specific supply voltage levels.

Failure to comply with the specifications related to the power supply may impair the tool's efficiency.

Safety measures:

- *Do not wet the tool with water or other liquids.*
- *If not otherwise specified, use the device on vehicles with a 12/24 V DC power supply and the chassis connected to the negative pole.*
- *The connection for the tool's power supply should always take place with the battery system of the vehicle being tested.*

- *Do not use external batteries to supply the tool unless explicitly requested to do so by the software.*
- *Pay the utmost attention to battery terminals and cables when setting up the connection to the vehicle. This will avoid false contacts and/or accidentally connecting the cables to metallic parts of the vehicle being tested.*
- *Use the supplied rubber plugs to protect the unused terminals.*
- *Before closing the connector protective caps, make sure there are no fluids between the cap and the connector.*

WARNING

The electromagnetic compatibility tests carried out on the tool guarantee that it can be adapted to the technologies normally used on vehicles (e.g.: engine check, ABS, airbag, etc.). Nevertheless, if malfunctions occur you should contact the vehicle's dealer.

3.5 *Disclaimer*

	Car, Truck, OHW, Marine environments: • *It is the responsibility of the operator to install the device and inform the driver about the correct use of the product.* • *An improper use of the product may cause serious and permanent injury.* • *Make sure the installation does not interfere with the operation of the vehicle controls.* • *Make sure the product's position does not compromise safety when driving the vehicle.* • *Inform the driver about the correct driving behaviour.* • *Inform the driver that the device must not be moved in any way or for any reason from the location where it was installed.*

	BIKE environment:
	• *On-road use:*
	  • *For safety reasons never drive the vehicle when the tool is connected to it.*
	• *Test bench use (dyno bench):*
	  • *It is the responsibility of the operator to install the device and inform the driver about the correct use of the product.*
	  • *An improper use of the product may cause serious and permanent injury.*
	  • *Make sure the installation does not interfere with the operation of the vehicle controls.*
	  • *Make sure the product's position does not compromise safety when testing the vehicle.*
	  • *Inform the driver about the correct driving behaviour.*
	  • *Inform the driver that the device must not be moved in any way or for any reason from the location where it was installed.*

4 OPERATION OF THE RADIO DEVICES

Wireless connection with Bluetooth and WiFi technology

The wireless connectivity with Bluetooth and WiFi technology supplies a standard and reliable method to exchange information between different devices, using radio waves. Other than TEXA products, even products such as cellular phones, portable devices, computers, printers, cameras, Pocket PCs, etc. use this type of technology.

The Bluetooth and WiFi interfaces look for compatible electronic devices according to the radio signal they emit and establish a connection between them. TEXA tools select and only prompt you with compatible TEXA devices. This does not exclude the presence of other sources of communication or disturbance.

THE EFFICIENCY AND THE QUALITY OF THE BLUETOOTH AND WiFi COMMUNICATIONS MAY BE INFLUENCED BY THE PRESENCE OF RADIO DISTURBANCE SOURCES. THE COMMUNICATION PROTOCOL HAS BEEN DEVELOPED TO MANAGE THESE TYPES OF ERRORS; HOWEVER, IN THESE CASES COMMUNICATION MAY BECOME DIFFICULT AND CONNECTION MAY REQUIRE SEVERAL ATTEMPTS.

SHOULD THE WIRELESS CONNECTION BE CRITICAL AND COMPROMISE A REGULAR COMMUNICATION, THE SOURCE OF THE ENVIRONMENTAL ELECTROMAGNETIC DISTURBANCE MUST BE IDENTIFIED AND ITS INTENSITY MUST BE REDUCED.

Position the tool so that the radio devices it is equipped with can work properly. In particular, do not cover it with any shielding materials or with any metallic materials in general.

5 ENVIRONMENTAL INFORMATION

	Do not dispose of this product with other undifferentiated solid waste. For information regarding the disposal of this product please see the pamphlet supplied.

6 NORMATIVE INFORMATION

Simplified EU Declaration of Conformity

CE	The manufacturer, TEXA S.p.A., declares that the type of **NAVIGATOR TXT MULTIHUB** radio equipment is compliant with the following directives: • *RED 2014/53/UE* The complete text of the EU declaration of conformity is available at the following Internet address **http://www.texa.it/download**.

A minimum separation distance of 20 cm is required; it must be supported by the installation and operating configurations of the transmitter and of the related antenna/s.

FCC:

This device complies with part 15 of the FCC Rules. Operation is subject to the following two conditions:
(1) This device may not cause harmful interference and
(2) this device must accept any interference received, including interference that may cause undesired operation.

Changes or modifications to this unit not expressly approved by the party responsible for compliance could void the user's authority to operate the equipment.

This equipment has been tested and found to comply with the limits for a Class B digital device, pursuant to part 15 of the FCC Rules. These limits are designed to provide reasonable protection against harmful interference in a residential installation. This equipment generates, uses and can radiate radio frequency energy and, if not installed and used in accordance with the instructions, may cause harmful interference to radio communications. However, there is no guarantee that interference will not occur in a particular installation. If this equipment does cause harmful interference to radio or television reception, which can be determined by turning the equipment off and on, the user is encouraged to try to correct the interference by one or more of the following measures:

i. Reorient or relocate the receiving antenna.
ii. Increase the separation between the equipment and receiver.
iii. Connect the equipment into an outlet on a circuit different from that to which the receiver is connected.
iv. Consult the dealer or an experienced radio/TV technician for help.

IC:

This device complies with Industry Canada RSS-247. Operation is subject to the following two conditions:
(1) this device may not cause interference, and
(2) this device must accept any interference, including interference that may cause undesired operation of the device.

Le présent appareil est conforme aux CNR d'Industrie Canada applicables aux appareils radio RSS-247. L'exploitation est autorisée aux deux conditions suivantes:

(1) l'appareil ne doit pas produire de brouillage, et
(2) l'utilisateur de l'appareil doit accepter tout brouillage radioélectrique subi, même si le brouillage est susceptible d'en compromettre le fonctionnement.

7 NAVIGATOR TXT MULTIHUB

NAVIGATOR TXT MULTIHUB is a multi-brand, multi-environment diagnostic *VCI* (*Vehicle Communication Interface*) that can communicate with a large variety of vehicles such as:

- *vehicles*
- *motorcycles*
- *buses*
- *commercial vehicles*
- *industrial vehicles*
- *agricultural machinery*
- *outboard engines*
- *inboard engines*
- *personal watercrafts*

NAVIGATOR TXT MULTIHUB allows performing operations such as:

- *the self-diagnosis for the reading and the clearing of the errors, the display of the engineering parameters and of the control unit's statuses;*
- *the activation, adjustment and configuration of the devices installed on the vehicle;*
- *the resetting of the oil change, service and airbag system warning lights;*
- *the configuration of the control units, keys and remote controls.*

NAVIGATOR TXT MULTIHUB is compatible with the **J2534** protocol and therefore allows performing repairs that require reprogramming the control units.

NAVIGATOR TXT MULTIHUB allows carrying out diagnostic operations on vehicles that support the **UDP/TCP ISO 13400** communication protocol.

In this type of vehicles, communication between the control units takes place not only via **CAN BUS** but also via **Ethernet BUS**.

The Ethernet BUS technology requires using a connection based on the IP protocol in order to carry out the diagnosis on vehicles and it is called **DoIP**, *Diagnosis over IP*.

NAVIGATOR TXT MULTIHUB allows carrying out on-road test drives.

During these tests, the behaviour of a series of parameters preselected via software is recorded while the vehicle is driving normally.

This allows recording any issues that may be difficult to replicate in the workshop.

The data is analysed using a specific software once you return to the workshop.

The Bluetooth and Wi-Fi technologies allow **NAVIGATOR TXT MULTIHUB** to connect to the following display units:

- *AXONE NEMO 2*
- *AXONE NEMO*
- *AXONE 5*
- *PC (equipped with TEXA software)*

without the need for a wired connection.

8 DESCRIPTION

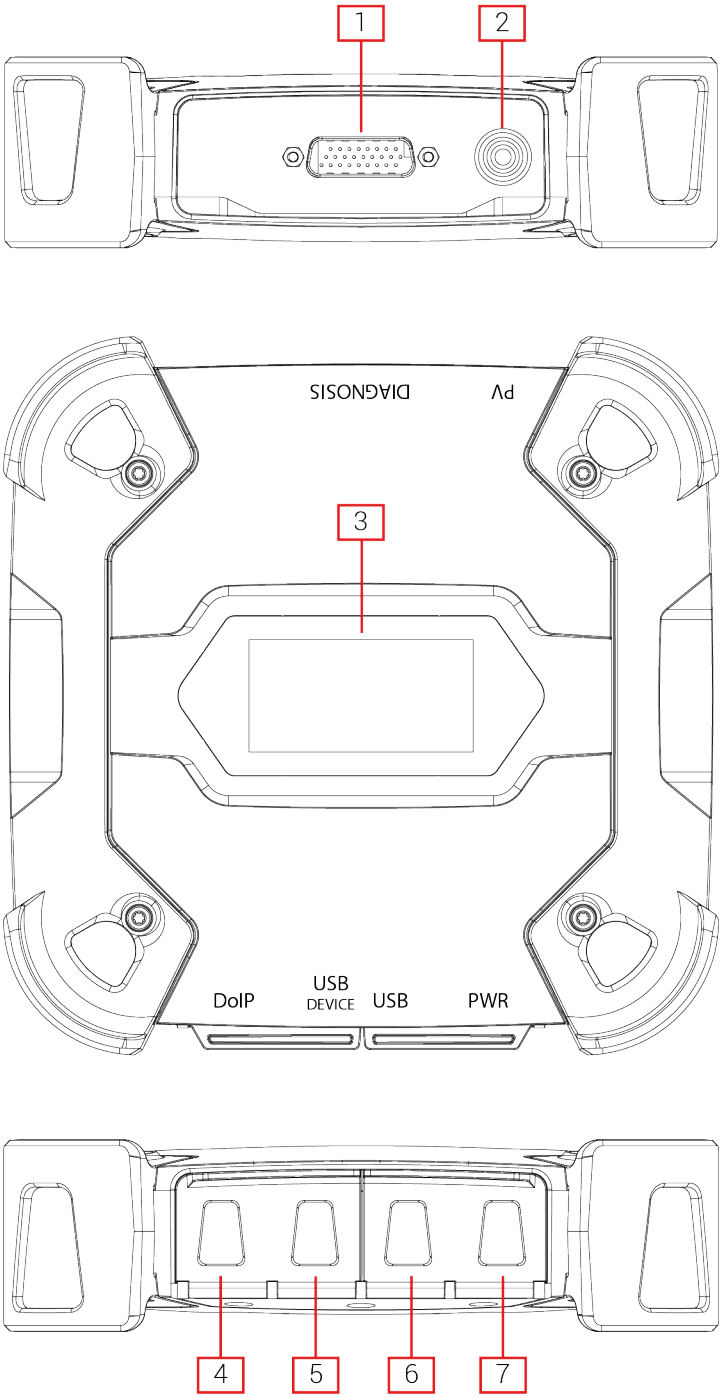

1. **DIAGNOSIS** *connector*
2. **PV** *connector*
3. *Display*
4. **DoIP*** *connector*
5. **USB DEVICE*** *connector*
6. **USB*** *connector*
7. **PWR*** *connector*

(*) Equipped with protective cap.

9 TECHNICAL FEATURES

Manufacturer:	TEXA S.p.A.
Product name:	NAVIGATOR TXT MULTIHUB
Main processor:	• *Type: iMX6 1 GHz* • *RAM: 512 MByte* • *Mass Storage: eMMC 8 GByte*
Coprocessor:	• *Type: STM32F439 168 MHz* • *RAM: 2 MByte SRAM, 8 MByte SDRAM* • *Flash: 2 MByte*
Power supply connector:	PWR: 2.1 DC jack
Power supply:	12 - 24 Vdc (from vehicle battery via OBD connector or specific wirings)
Consumption:	1 A @12 V max
USB connectors:	• *USB: USB 2.0 host type A max 1 A out* • *USB DEVICE: USB 2.0 device type B (priority connector)*
Bluetooth communication:	Bluetooth 5.0 (BDR/EDR/LE)
Wi-Fi communication:	WiFi IEEE 802.11 b/g/n 2.4GHz
Operational band:	2400 ÷ 2483.5 MHz
Maximum radio frequency power transmitted:	10 dBm (2400 ÷ 2483,5 MHz)
Diagnostic connectors:	• *DIAGNOSIS: DSUB-26HD (ISO 22900-1)* • *DoIP: RJ45 (UDP/TCP 13400)*
Electronic switch:	2-way, 13 independent positions
Control units reprogramming connector:	PV (SAE J2534-1)
Supported protocols:	• *Blink codes* • *K, L (with current protection 100 mA), ISO9141-2, ISO14230* • *CAN ISO11898-2 High Speed* • *Second ISO11898-2 CAN channel* • *Second ISO11898-2:2016 CAN FD channel* • *CAN ISO 11898-3 LOW Speed* • *CAN SAE J2411 Single Wire* • *SAE J1850 PWM* • *SAE J1850 VPW* • *SAE J2534-1* • *SAE J1708* • *UDP/TCP ISO 13400 (DoIP)*

User interface:	Display OLED 64x128 dot
Operating temperature:	0 ÷ 50 °C
Storage temperature:	- 20 ÷ 60 °C
Operating moisture:	10% ÷ 80% without condensation
Dimensions [mm]:	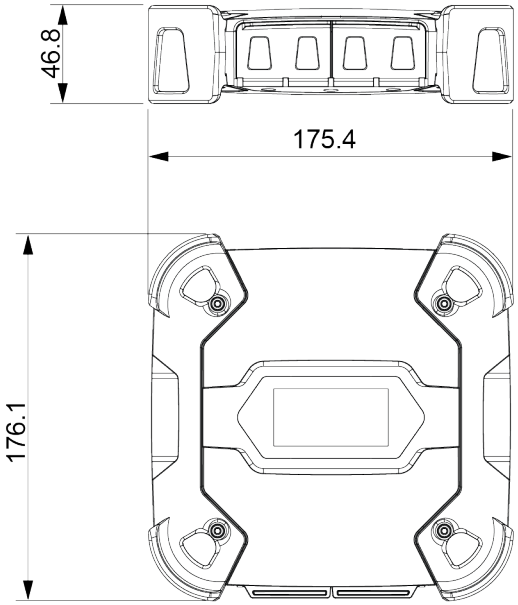
Weight:	600 g
IP protection level:	IP53 * *(*) With properly closed protective caps.*
Directives:	RoHS 2011/65/UE RED 2014/53/UE 2015/863/UE
Electromagnetic compatibility:	ETSI EN 301 489-1 ETSI EN 301 489-17
Radio systems:	ETSI EN 300 328
Electrical safety:	EN 62638-1/AC:2015 EN 62311:2008

CONNECTOR PINOUT DSUB-26HD ISO 22900-1

1	Manuf. Discretionary diagnostic line	**14**	CAN L
2	+J1850	**15**	L-Line
3	Manuf. Discretionary diagnostic line	**16**	Unswitched battery voltage
4	Power ground	**17**	Ext. Adapter ID0
5	Signal Ground	**18**	Ext. Adapter ID1
6	CAN H	**19**	SPI OUT
7	K-Line	**20**	SPI IN
8	Manuf. Discretionary diagnostic line	**21**	SPI CLK
9	Manuf. Discretionary diagnostic line	**22**	SPI EN
10	-J1850	**23**	+5V OUT
11	Manuf. Discretionary diagnostic line	**24**	Switched battery voltage
12	Manuf. Discretionary diagnostic line	**25**	reserved
13	Manuf. Discretionary diagnostic line	**26**	Power ground for Ext. Adapter

10 DISPLAY

The VCI has a display that acts as the user interface.

The display is divided into areas:

1. *Communication*
2. *Battery*
3. *Status*

10.1 Communication

This area shows the current communication mode with the display unit.

Communication	Display
No communication mode configured.	
USB	USB
Bluetooth	BLUETOOTH
Wi-Fi in Hotspot mode (direct connection between VCI and display unit)	HOTSPOT
Wi-Fi in Station mode (connection of the VCI to the workshop's Wi-Fi network: the name of the workshop's Wi-Fi network and the signal strength are displayed)	1234_WIFI
Serial number It appears for a few seconds during the shutdown phase.	SN:DN1AT000001

For further information see the COMMUNICATION chapter.

10.2 Battery

The VCI displays the charging voltage of the vehicle's battery to which it is connected and from which it draws power.

The voltage is read via the **DIAGNOSIS** connector or the **PWR** connector based on the power supply mode.

The VCI can be powered by multiple sources at the same time.

Connector Used for Power Supply	Connector Used for Voltage Reading	Icon
DIAGNOSIS	DIAGNOSIS	
PWR	PWR	
DIAGNOSIS + PWR	DIAGNOSIS	

The following values are displayed:

- *instantaneous*
- *maximum[Max.]*
- *tickover[Min.]*

INFORMATION

In case of dual power supply, if the voltage read via the DIAGNOSIS connector drops below a given threshold, the displayed values refer to the voltage on the PWR connector.

10.3 *Status*

This area shows the status of the VCI.

Status	Display
The VCI is turning on.	AUTOCHECK
The VCI warranty has not been activated yet.	NO WARRANTY
The VCI is awaiting commands.	READY
The VCI is ready to carry out a STANDARD diagnosis.	DIAGNOSIS
The VCI is ready to carry out a DoIP diagnosis via Wi-Fi.	DOIP
The VCI is ready to carry out a DoIP diagnosis via network cable.	DOIP ETHERNET
The VCI is in Pass-Thru mode.	PASSTHRU
The VCI is being configured for the dynamic tests.	REC ...
The VCI is recording the desired parameters.	REC ON
Blinking: it indicates that the VCI is active.	

The VCI is being powered by the vehicle battery via the **DIAGNOSIS** connector.	
The VCI is being powered via the **PWR** connector.	
The VCI is turning off.	
The VCI is restarting after a short interruption of the power supply.	

For further information see the DIAGNOSIS chapter.

10.4 *Other Messages*

Other messages that may appear in the VCI display can be about:

Progress status of the VCI firmware update procedure.	
VCI restart required.	
Error detection (example).	

INFORMATION

*The error indicated in the display refers to an unexpected behaviour of the*VCI.

Contact the Technical Assistance and give the error code for further information on how to proceed.

11 POWER SUPPLY

The VCI does not have an internal battery and can be powered:

- *by the battery in the vehicle being tested, using the specific wiring;*

When the device is powered using a diagnostic cable connected to the **DIAGNOSIS** connector, the VCI displays the vehicle's battery voltage.

NOTICE

The use of different power sources other than the ones indicated in this manual can damage the VCI.

Do not power the VCI using external batteries that are not electrically connected to the vehicle you are working on.

The VCI cannot be powered via its USB ports.

11.1 *Power Supply from Vehicle Battery*

The VCI is designed and manufactured to be powered directly from the battery in the vehicle being tested.

Power is taken from the battery in the vehicle being tested via:

- *OBD socket;*
- *battery cable;*
- *power supply cable;*
- *cigar lighter cable.*

This type of power supply requires using specific wirings.

11.1.1 OBD socket

Power can be supplied to the VCI via the OBD socket of the vehicle being tested, by connecting a specific diagnostic cable to the **DIAGNOSIS** connector.

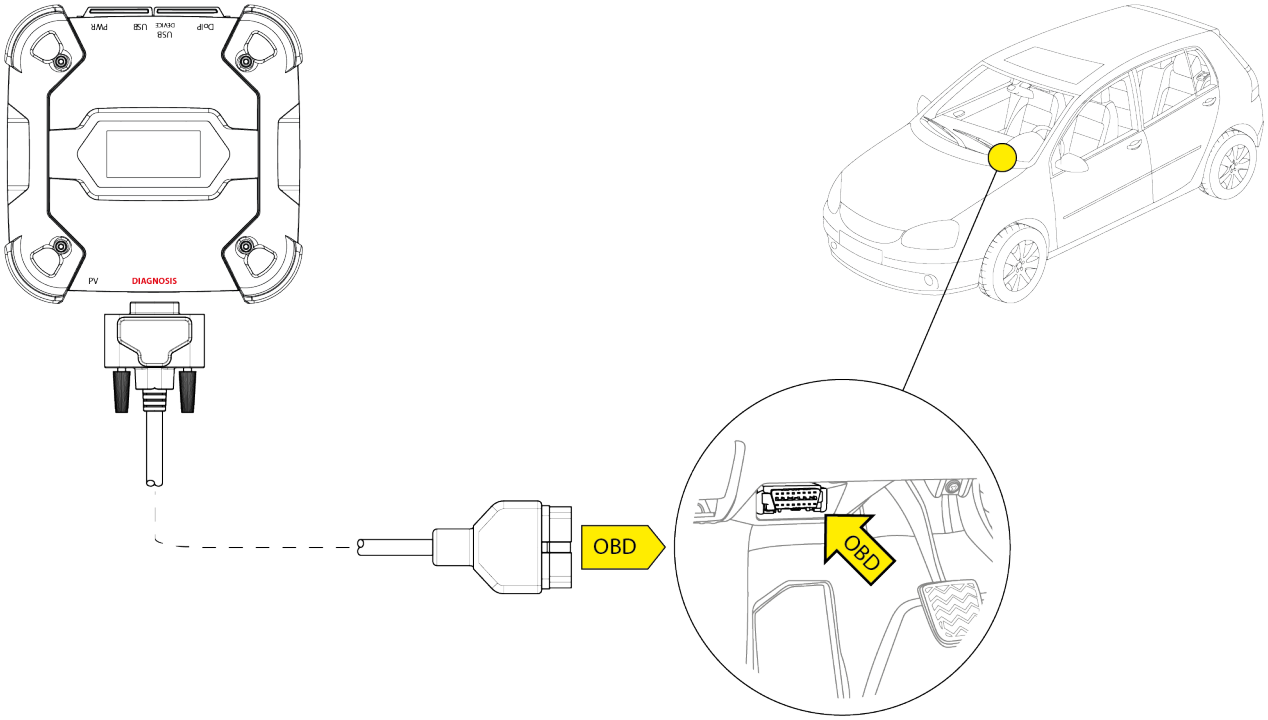

NOTICE

The image is only an example: the position of the OBD socket and the type of diagnostic cable may change based on the vehicle being tested.

Always refer to the documentation supplied by the vehicle manufacturer for the positioning and correct access to the OBD socket.

Always refer to the indications provided by the diagnostic software for the selection of the diagnostic cable to use.

Proceed as follows:

1. *Connect the diagnostic cable to the* **DIAGNOSIS** *connector.*
2. *Connect the diagnostic cable to the vehicle's OBD socket.*
3. *Turn the vehicle's ignition key on ON (instrument panel on).*

The VCI displays the following screen if no communication modes with the display unit have been configured.

11.1.2 Battery Cable

The VCI can be powered with a specific wiring to be connected to the battery in the vehicle being tested via the **PWR** connector.

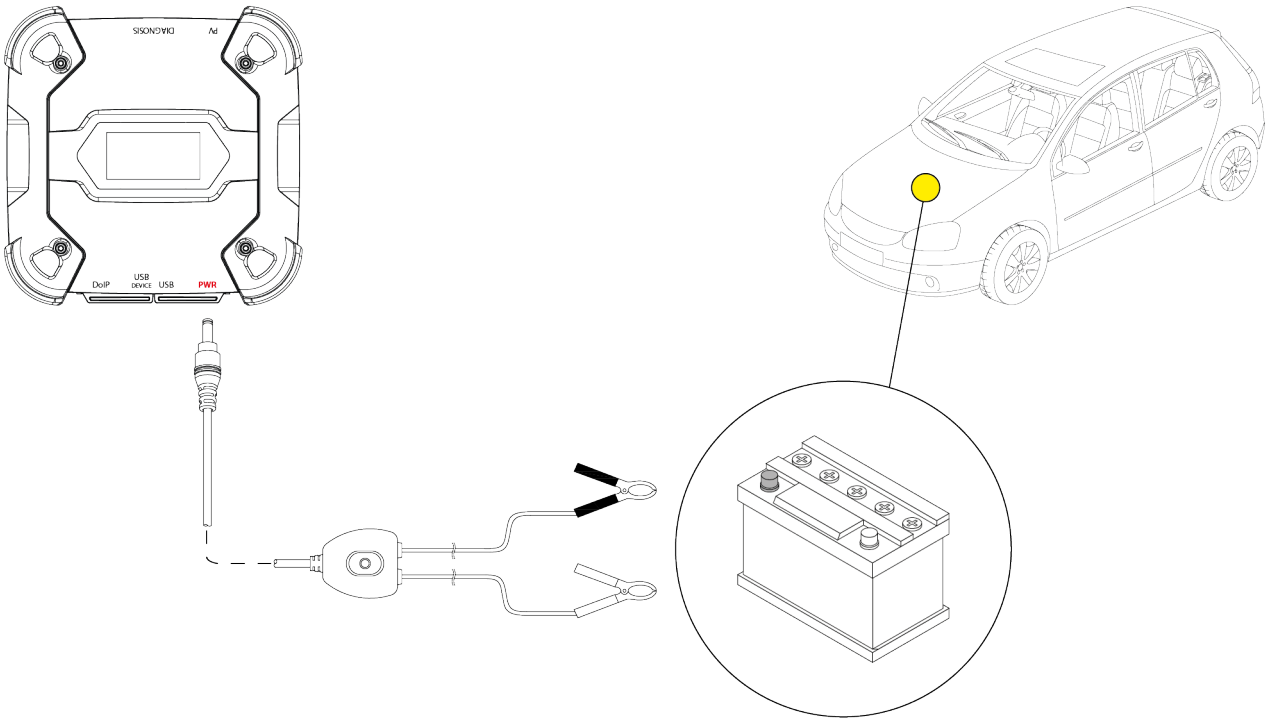

NOTICE

If the battery is in the rear part of the vehicle, we recommend connecting the VCI directly to the power supply points coming from the battery that are available near the area in which you are operating.

Use the battery power only when specifically requested by the diagnostic software.

Be careful to respect the polarities indicated on the cables when connecting to the battery terminals.

Proceed as follows:

1. *Connect the battery cable to the* **PWR** *connector.*
2. *Connect the cable clamps to the battery terminals.*

⚠ CAUTION

Incautious operations may expose the operator to the risk of electric shock, even though of low intensity.

Be very careful when connecting the clamps to the battery terminals.

In this case the green LED on the cable's **junction box** will also turn on.

The VCI displays the following screen if no communication modes with the display unit have been configured.

11.1.3 Power Supply Cable

The VCI can be powered by means of a power supply cable with clamps connected to specific diagnostic cables.

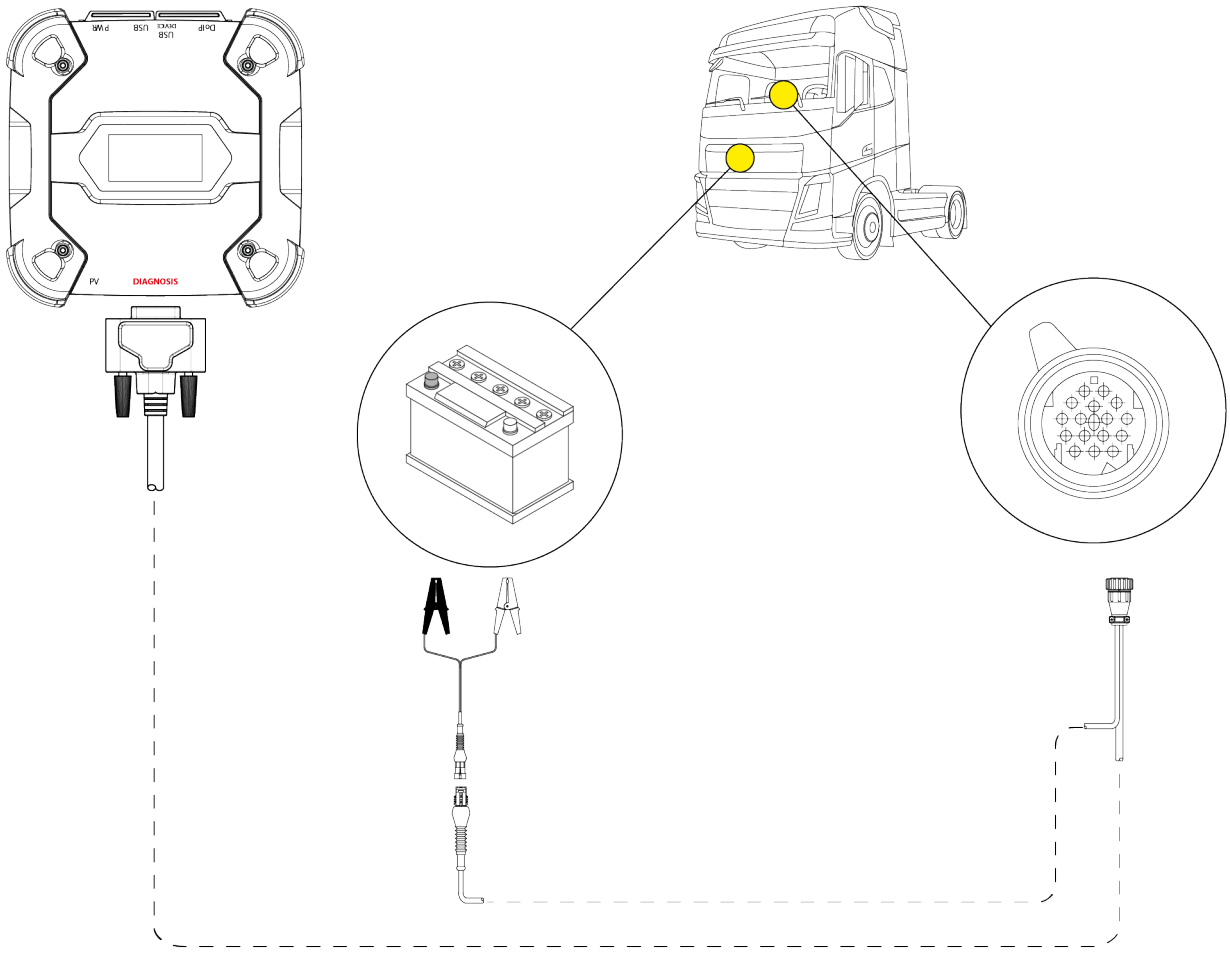

NOTICE

The image is only an example: the position of the diagnostic socket and the type of diagnostic cable may change based on the vehicle being tested.

Always refer to the documentation supplied by the vehicle manufacturer for the positioning and correct access to the diagnostic socket.

Always refer to the indications provided by the diagnostic software for the selection of the diagnostic cable to use.

NOTICE

If the battery is in the rear part of the vehicle, we recommend connecting the VCI directly to the power supply points coming from the battery that are available near the area in which you are operating.

Use the battery power only when specifically requested by the software.

Be careful to respect the polarities indicated on the cables when connecting to the battery terminals.

Proceed as follows:

1. *Connect the diagnostic cable to the* **DIAGNOSIS** *connector.*
2. *Connect the power supply cable to the diagnostic cable.*
3. *Connect the cable clamps to the battery terminals.*

CAUTION

Incautious operations may expose the operator to the risk of electric shock, even though of low intensity.

Be very careful when connecting the clamps to the battery terminals.

The VCI displays the following screen if no communication modes with the display unit have been configured.

11.1.4 Cigar lighter cable

The VCI can be powered by the battery in the vehicle being tested using the **PWR** connector.

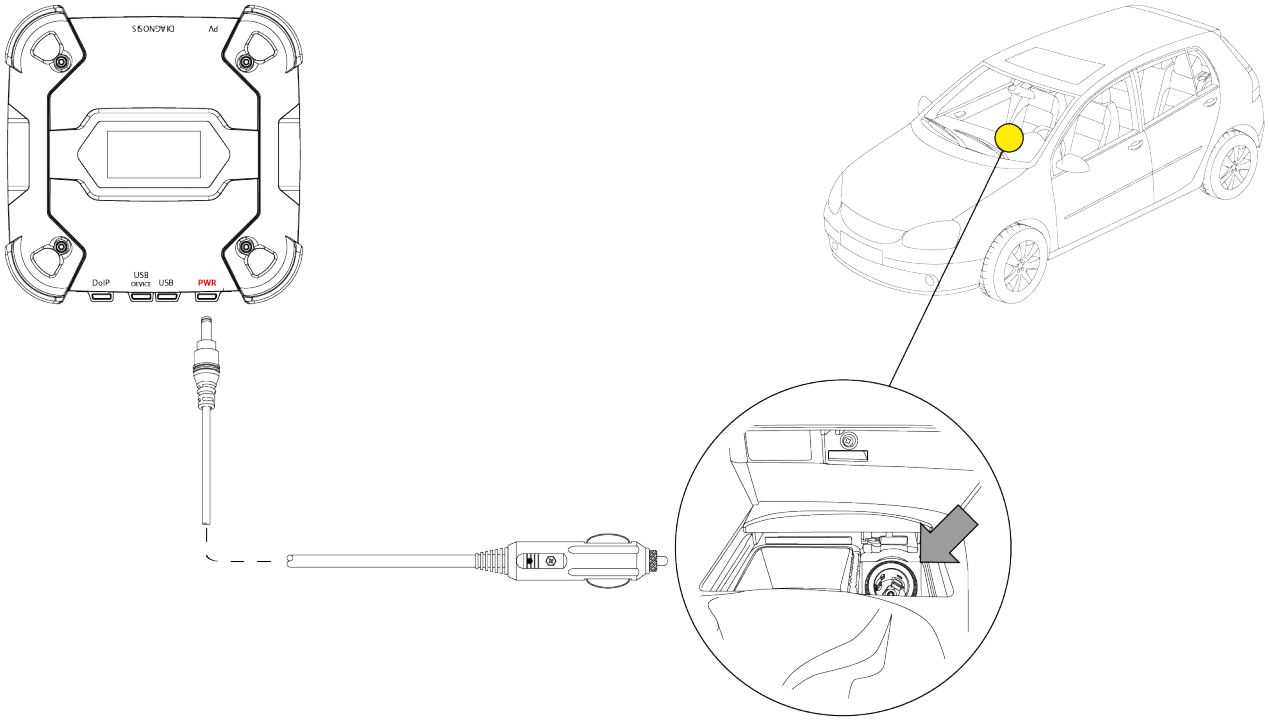

NOTICE

The image is only an example: the position of the cigar lighter socket may change based on the vehicle being tested.

Always refer to the documentation supplied by the vehicle manufacturer for the positioning and correct access to the cigar lighter socket.

NOTICE

Make sure the cigar lighter socket is powered even when the ignition key is on OFF (instrument panel off).

Proceed as follows:

1. *Connect the cigar lighter cable to the* **PWR** *connector.*
2. *Connect the cigar lighter cable to the cigar lighter socket in the vehicle being tested.*

In this case the **green LED** on the connector for the lighter socket will also turn on.

The VCI displays the following screen if no communication modes with the display unit have been configured.

12 POWER ON/OFF

CAUTION

In all the power source connection and disconnection operations, please refer to the safety indications in the POWER SUPPLY and DIAGNOSIS chapters in order to reduce the risk of electric shock.

12.1 *Power on*

The VCI turns on automatically once it is connected to one of the power sources described previously.

For further information see the POWER SUPPLY chapter.

Proceed as follows:

Power the VCI

The VCI turns on.

At the end, the VCI displays the following screen if no communication modes with the display unit have been configured.

Otherwise, the previously configured communication mode will be displayed.

12.2 *Boot down*

To turn off the VCI, you must disconnect it from the power source.
Proceed as follows:

Disconnect the VCI from the power source.
The VCI turns off.

INFORMATION

Generally, if the tool is powered via OBD connector, just turn off the vehicle by turning the ignition key to the OFF position (ignition off).

For further information, please refer to the technical documentation provided by the manufacturer.

NOTICE

Turning off the VCI during specific diagnostic operations (e.g.: control unit reprogramming) may cause the operations to fail.

Make sure all diagnostic operations have been completed before turning off the VCI.

13 COMMUNICATION

The VCI communicates with the control units in the vehicle being tested via connection to the vehicle's diagnostic socket through the specific diagnostic cable indicated by the software.

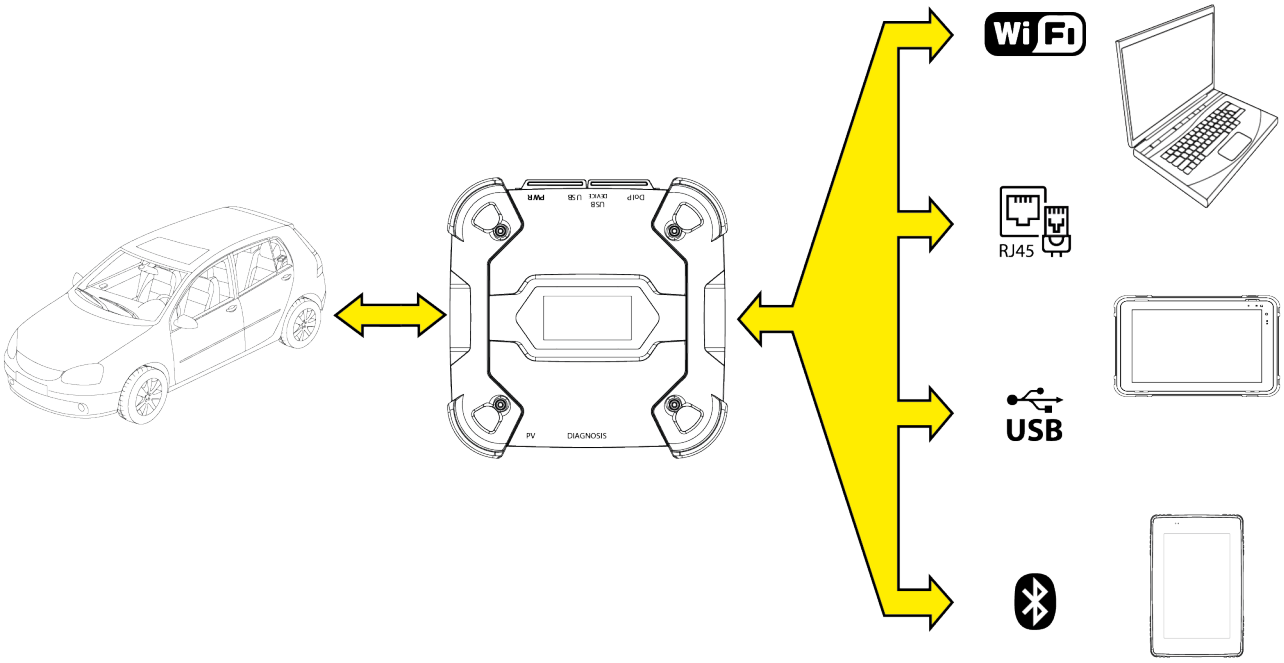

The VCI has various communication modes, some of which are reserved for specific types of diagnosis:

- *WiFi*
- *Bluetooth*
- *Network cable*
- *USB*

INFORMATION

*The communication via RJ45 (Ethernet cable connected to the **DoIP*** connector) *is reserved for diagnostic operations via DoIP*.

The communication between the VCI and the display unit must be configured through the specific software function before any type of operation on the vehicle.

This function allows configuring all communication modes at once.

Proceed as follows:

1. Power the VCI through the vehicle's diagnostic socket, as described in this manual.

The VCI displays the following screen if no communication modes with the display unit have been configured.

2. Turn on the display unit.
3. Start the diagnostic software.
4. Launch the VCI configuration function.
5. Follow on screen instructions.

For further information, see the software operating manual.

When turning on the VCI, the first available mode is selected (e.g.: Wi-Fi).

If, during use, the mode in use is no longer available (e.g.: no signal), the connection will automatically shift to the first available mode (e.g.: Bluetooth).

However, it is always possible to force the communication in the desired mode.

When turning on the VCI, it automatically recognises the communication mode through which it is connected to the display unit.

The type of communication is indicated on the VCI display.

INFORMATION

It is always possible to configure the Bluetooth communication and Wi-Fi communication in different moments; however, the two communication modes cannot be used at the same time.

13.1 *Wi-Fi*

The Wi-Fi communication between the VCI and the display unit is reserved to **CAN** and **DoIP** diagnostic operations.

For further information see the DIAGNOSIS chapter.

The VCI connects to the display unit in **STATION** mode, i.e. using the workshop's Wi-Fi network.

INFORMATION

For compatibility and radio signal strength reasons, the workshop's Wi-Fi router must be set to 2.4 GHz.

Connection with a 5 GHz Wi-Fi router is prevented through software settings of the VCI.

TheVCIcan only connect to the following types of networks:

- *WEP*
- *WPA*
- *WPA2*

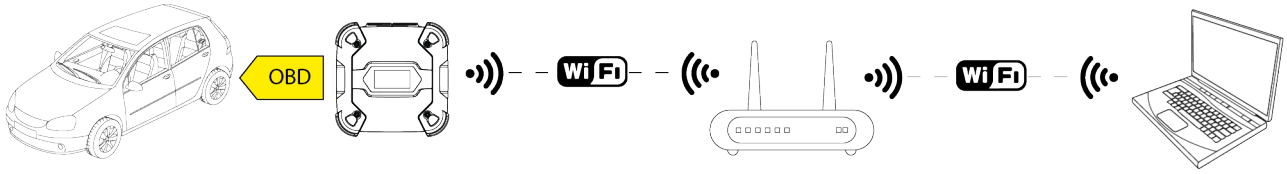

INFORMATION

During the Wi-Fi connection configuration part, you may be required to enter the credentials to access the network to which you wish to connect the VCI.

The credentials are obtained automatically if the tool is connecting to the same network as the display unit or to one of the networks configured in it.

The name of the W-Fi network to connect to is displayed in the upper part of the display (ex: 1234_Wi-Fi).

The following screen indicates that the VCI is connected to the display unit in the desired mode and is awaiting commands.

As an alternative, the VCI can connect to the display unit in **HOTSPOT** mode, i.e. by creating its own Wi-Fi network with which it can connect to the display unit.

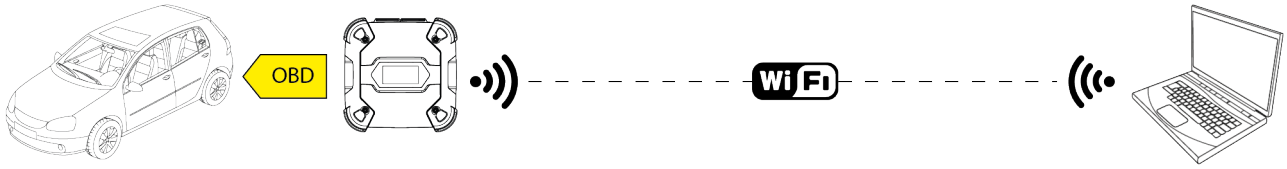

The following screen indicates that the VCI is connected to the display unit in the desired mode and is awaiting commands.

For further information, see the software operating manual.

13.2 Bluetooth

The Bluetooth connection is the alternative to the Wi-Fi connection for wireless communication between the VCI and the display unit.

INFORMATION

The Bluetooth communication is only possible with display units with Bluetooth 2.1 or higher.

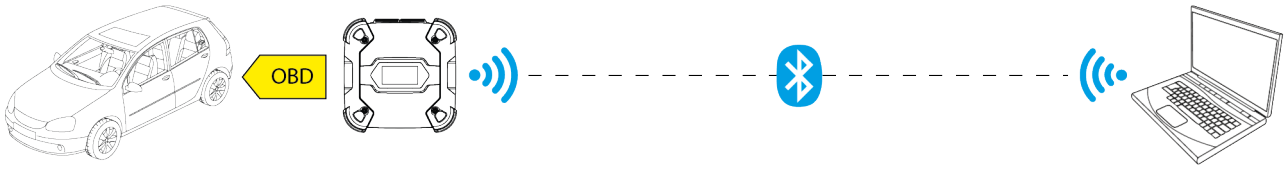

INFORMATION

To configure the communication properly you must use the serial number indicated on the data plate on the VCI.

The following screen indicates that the VCI is connected to the display unit in the desired mode and is awaiting commands.

For further information, see the software operating manual.

13.3 Network Cable

The communication between the VCI and the display unit through an Ethernet cable connected to the **DoIP** connector is only possible when the vehicle's compatibility to the ISO 13400 standard is detected.

INFORMATION

This communication mode is reserved for use together with the vehicle manufacturer's proprietary diagnostic software.

Use this type of communication only in particular cases, such as when reprogramming some control units or if indicated to by Technical Assistance.

Do not use this type of connection to connect the VCI directly to a modem, access point or router.

For further information see the DIAGNOSIS chapter.

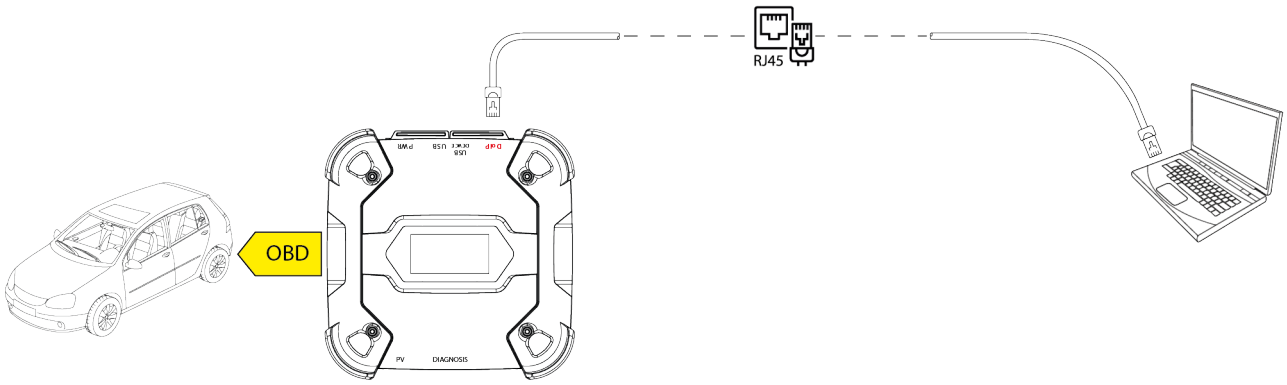

The following screen indicates that the VCI is connected to the display unit in the desired mode and is awaiting commands.

For further information, see the software operating manual.

13.4 USB

The connection via USB between the tool and the display unit can **only** be established through the **USB DEVICE** connector.

The **USB** connector is reserved to assistance operations and must only be used if specifically indicated by the Technical Assistance.

In order to connect via USB, you must use the specific cable provided or, if necessary, cables on which "USB HIGH SPEED" is specifically indicated.

INFORMATION

This communication mode is not available for the following display units:

- *AXONE 5*

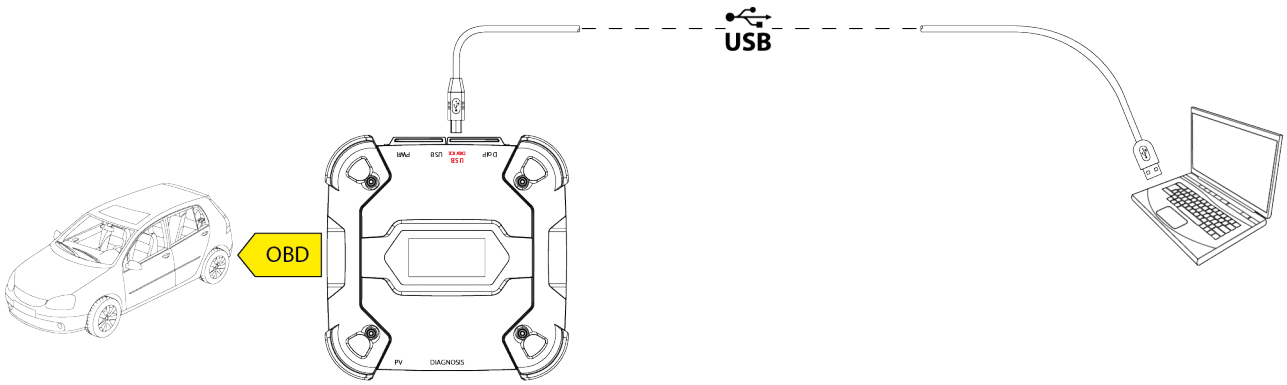

INFORMATION

*The connection to the display unit via USB through the **USB DEVICE** connector automatically inhibits any activity on the connector **USB**.*

NOTICE

*All the ongoing processes through the **USB** connector are immediately stopped as soon as the tool detects the cable connection to the **USB DEVICE** connector, which may compromise any ongoing assistance operations (e.g.: firmware update via USB drive) through the connector **USB**.*

*Do not use this connection mode during assistance operations that require using the connector **USB**.*

The following screen indicates that the VCI is connected to the display unit in the desired mode and is awaiting commands.

For further information, see the software operating manual.

14 DIAGNOSIS

The protocols supported by the VCI allow it to perform various types of diagnoses.

The type of diagnosis that can be carried out depends on the vehicle being tested and its compliance with specific protocols for communication with the control units.

The type of diagnosis also determines the communication mode between the VCI and the display unit.

Diagnosis	Protocol	Communication
STANDARD	diagnostic protocols indicated in the TECHNICAL FEATURES chapter (except UDP/TCP ISO 13400)	• *WiFi* • *Bluetooth* • *USB*
DoIP (Diagnosis over IP)	diagnostic protocol UDP/TCP ISO 13400	• *WiFi* • *USB* • *Network cable*
PASS-THRU	diagnostic protocols required by the SAE J2534 standard	• *USB*

Where possible, the selection of the type of diagnosis is carried out through specific functions in the diagnostic software.

INFORMATION

Carrying out diagnostic tests using the functions made available by the software requires you to read and accept specific disclaimers.

Such disclaimers contain important safety indications that you must have read and fully understood before carrying out the tests.

INFORMATION

To carry out diagnostic tests, you must have previously configured the communication between the VCI and the display unit.

Some types of diagnostic operations require specific communication modes.

For further information, see the software operating manual.

The diagnostic connection is always established through a specific wiring indicated by the diagnostic software.

The diagnostic cable must be connected to the **DIAGNOSIS** connector on one end, and to the diagnostic socket in the vehicle being tested on the other end.

For further information on the positioning and correct access to the diagnostic socket, refer to the documentation made available by the vehicle manufacturer.

INFORMATION

In some cases, specific adapters may be required.

NOTICE

Using a wrong diagnostic cable or a cable not specifically designed for this tool may prevent a correct diagnosis and/or damage the tool and the vehicle.

Only use the diagnostic cables indicated by the diagnostic software.

Do not use third-party diagnostic cables that have not been specifically approved by the tool manufacturer.

The VCI also allows carrying out diagnostic tests with the vehicle on road / vessel running.

This mode of use is called **REC** (*Recording*) and allows checking the vehicle's behaviour during its normal use.

For further information see the DYNAMIC TESTS chapter.

14.1 DoIP diagnosis

The DoIP diagnosis (*Diagnosis over IP*) is only possible on the vehicles that support the **UDP/TCP ISO 13400** communication protocol.

In this type of vehicles, communication between the control units takes place not only via CAN BUS but also via Ethernet BUS.

The following communication modes are available for this type of diagnosis:

- *WiFi*
- *USB*
- *Network cable*

INFORMATION

The diagnosis via network cable is reserved for use of theVCItogether with the vehicle manufacturer's proprietary diagnostic software.

Its use is reserved to particular cases, such as when reprogramming some control units, or specific cases indicated by the vehicle manufacturer.

For further information see the COMMUNICATION chapter.

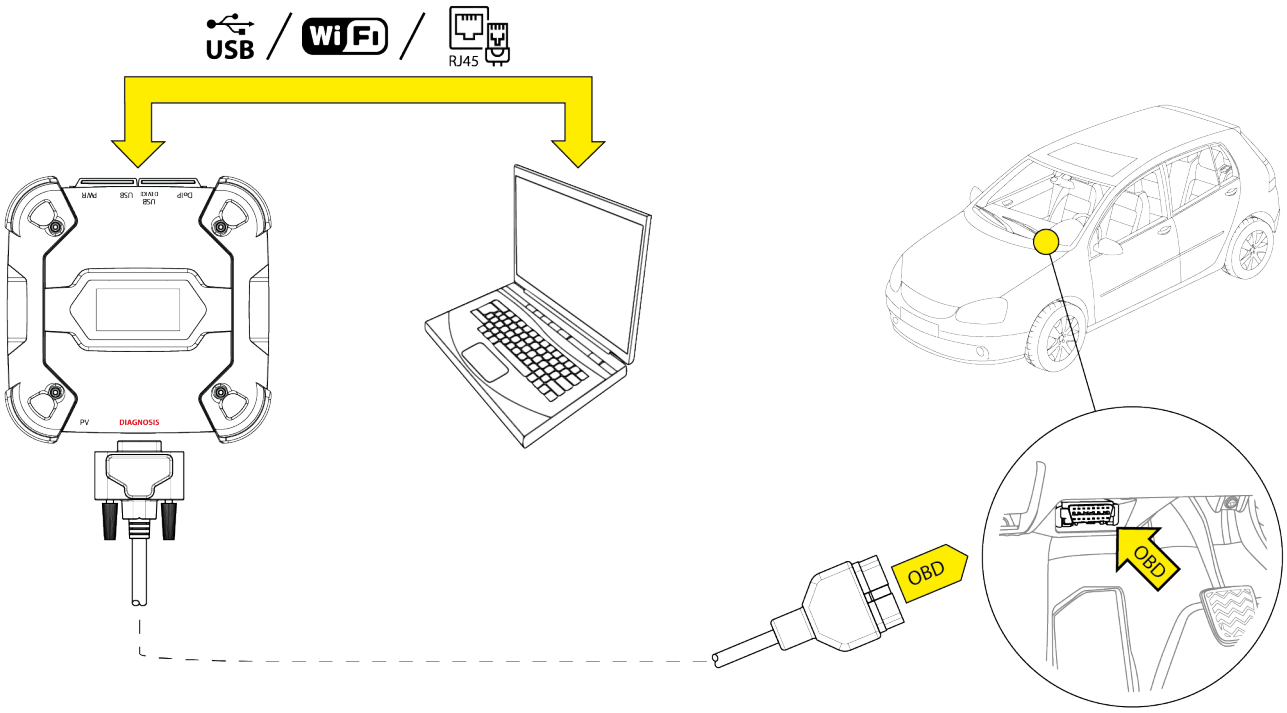

Proceed as follows:

1. *Start the diagnostic software.*
2. *Select the vehicle you wish to work on.*
3. *Select the system you wish to diagnose.*
4. *Select the desired variant.*
5. *Connect the VCI to the vehicle following the support information provided by the software.*
6. *Select the DoIP diagnosis.*

The VCI displays one of the following screens, based on the selected communication mode.

INFORMATION

TheDoIPdiagnosis can be carried out even when the VCI is directly connected to the display unit, that is in hotspot mode; however, in this mode it is impossible to access the Internet, therefore the functions that are available are limited.

For further information, see the software operating manual.

14.2 *STANDARD diagnosis*

The STANDARD diagnosis is a type of diagnosis based on the diagnostic protocols indicated in the TECHNICAL FEATURES chapter, except for protocol UDP/TCP ISO 13400 (DoIP).

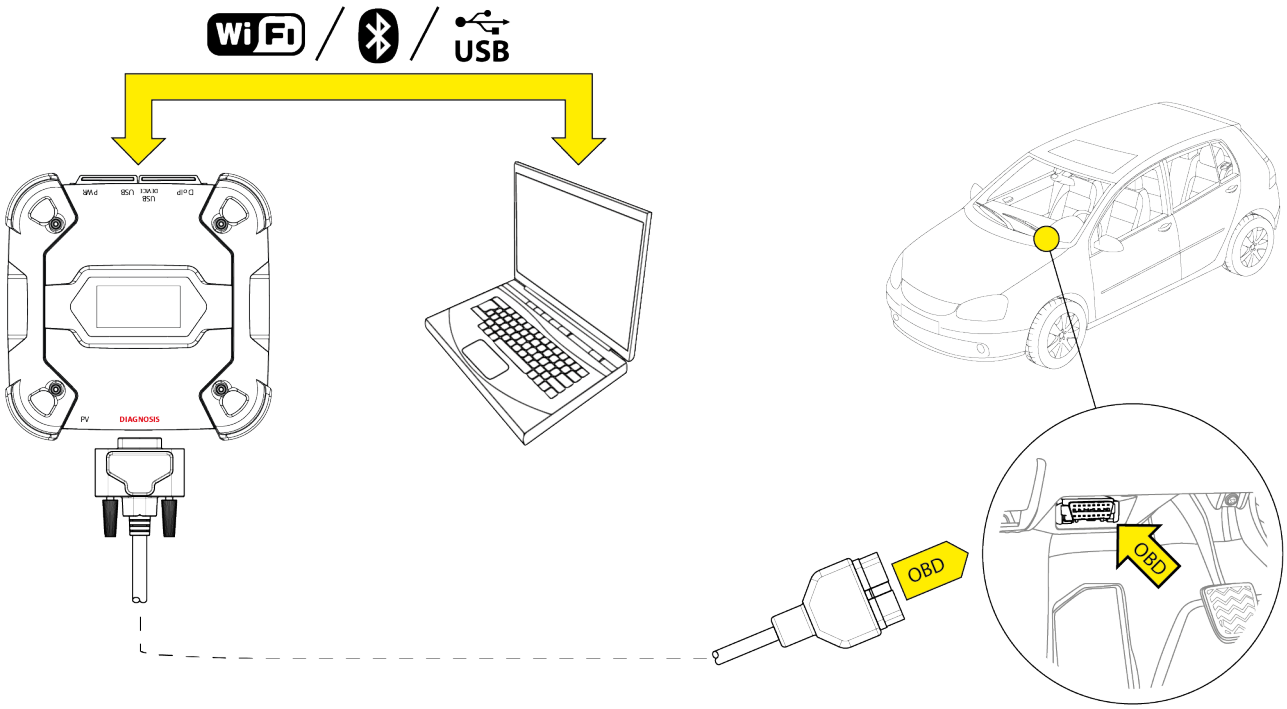

The following communication modes are available for this type of diagnosis:

- *WiFi*
- *Bluetooth*
- *USB*

For further information see the COMMUNICATION chapter.

Proceed as follows:

1. *Start the diagnostic software.*
2. *Select the vehicle you wish to work on.*
3. *Select the system you wish to diagnose.*
4. *Select the desired variant.*
5. *Connect the VCI to the vehicle following the support information provided by the software.*
6. *Select the STANDARD diagnosis.*

The VCI displays one of the following screens, based on the selected communication mode.

For further information, see the software operating manual.

14.3 Pass-Thru

The Pass-Thru standards SAE J2534 and ISO 22900 aim at guaranteeing the possibility to carry out specific operations for control unit diagnosis and reprogramming using a third-party VCI, i.e. not proprietary to the vehicle manufacturer.

These operations are possible by using the VCI in combination with a specific software.

The VCI and the software must comply with the requirements of the Pass-Thru standards.

The software is distributed by the vehicle manufacturer through its website or a physical storage device.

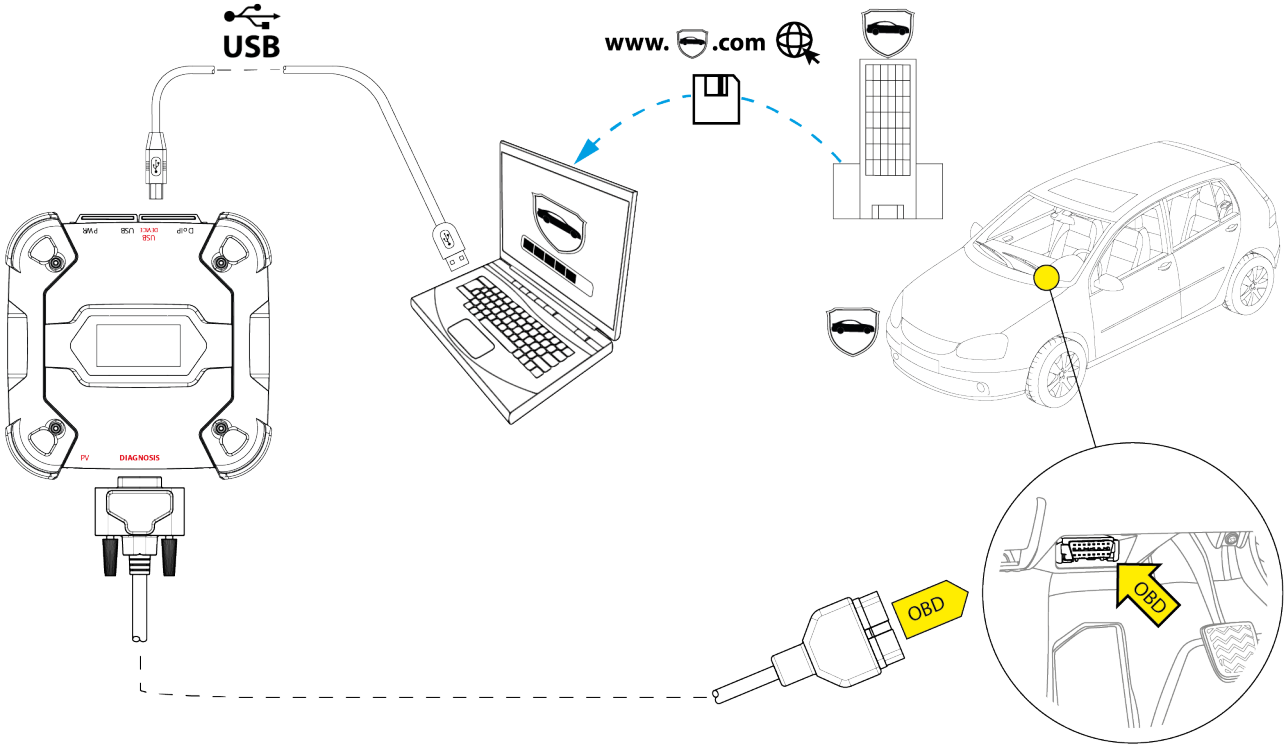

INFORMATION

The activation date, the actual availability, the type, the cost and the procedures regarding the use of the Pass-Thru service(s) are specifically determined by each manufacturer; costs, performances and procedures may therefore vary independently of what TEXA S.p.A establishes.

Each manufacturer imposes specific hardware and operating system requirements for the PC where its software will be installed.

The PC must be generally equipped with the following:

- *Windows operating system;*
- *USB port;*
- *serial port;*
- *RJ45 port;*
- *Wi-Fi;*
- *access to the Internet.*

INFORMATION

Reprogramming or calibrating the control units may require you to download specific files from the vehicle manufacturer's website.

A high-speed connection to the Internet is highly recommended.

The vehicle manufacturer is entitled to request specific documentation to independent vehicle repairers (e.g.: Chamber of Commerce company registration showing that the company is actually registered in the register of vehicle repairers) so that they can carry out reprogramming operations on security systems (e.g.: immobiliser and/or antitheft control units).

The full compliance with the J2534-1 standard of the VCI that you purchased allows you to carry out operations using the diagnostic cable indicated by the software.

If operating on vehicles using the J2534-2 standard for the CAN Single Wire reprogramming, an optional cable may be required to connect to the **PV** connector.

INFORMATION

When using theVCIforPass-Thruoperations, the communication with the display unit can only be established via USB through the specific cable connected to the connector **USB DEVICE**.

During the reprogramming operations, it is essential that:

- *the vehicle's supply voltage remains constant throughout the operations; if necessary, use an external power adapter to charge the vehicle's battery;*
- *the vehicle's electrical system is efficient and working properly;*
- *the Internet connection is stable and suitable for the operations required;*
- *the instructions provided by the vehicle manufacturer are followed to the letter step by step.*

The VCI displays the following screen when in Pass-Thru mode.

NOTICE

Reprogramming or calibrating the control units is an extremely delicate operation that may cause serious damage to persons or things if not performed properly.

Carefully follow the indications by the vehicle manufacturer for every aspect of the reprogramming procedure and in general for every operation in Pass-Thru.

For further information, please refer to the documentation provided by the vehicle manufacturer.

INFORMATION

TEXA S.p.A. is not, under any circumstance, liable for repair and maintenance work carried out on vehicles using the Technical Information and/or Services offered by the specific websites of each manufacturer. In this respect, the use of Pass-Thru mode is subject to the acceptance of specific Liability regulations defined by each vehicle manufacturer.

14.4 *Dynamic Tests*

The **REC** mode of the VCI allows checking the vehicle's behaviour during its normal use.

The VCI can acquire and store data relating to the tests through the OBD connector of the vehicle to which it is connected.

The data that can be stored includes the following:

- *Engineering Parameters*
- *Errors*
- *states*

The data to be stored will be selected by the operator through a specific function in the diagnostic software.

INFORMATION

Some information may not be acquirable or have a delayed recording during a dynamic test due to the operating strategy of the control unit.

The operating strategy is defined by the vehicle manufacturer.

Using the VCI in this mode requires different phases that must be carried out correctly and in the order described:

As an example, below you will find the operating procedure of the VCI in case of a test carried out with the following specifications:

- *car;*
- *Wi-Fi communication between VCI and display unit already configured.*

NOTICE

The safety indications below must be adapted based on the type of vehicle you wish to test.

In particular, refer to the contents in the chapter SAFETY RULES and in the DISCLAIMER.

I.INSTALLATION

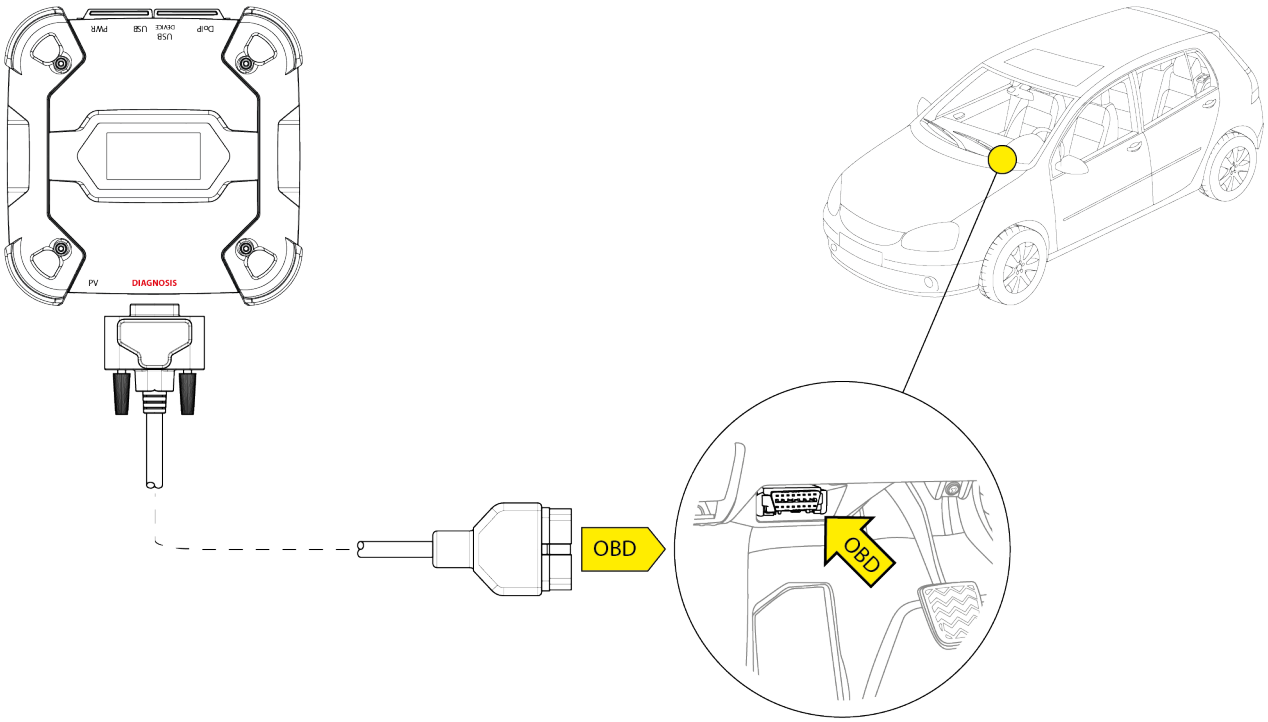

1. Turn off the vehicle (instrument panel off).
2. Locate the OBD connector.
3. Carefully remove any panels protecting the OBD connector.

For further information, please refer to the documentation provided by the vehicle manufacturer.

4. Connect the diagnostic cable to the **DIAGNOSIS** connector on the VCI.
5. Connect the diagnostic cable to the vehicle's OBD connector.
6. Make sure the diagnostic cable is secured to the OBD connector in order to avoid any accidental disconnection during use.
7. Position the VCI and the diagnostic cable properly.

WARNING

An improper positioning of the VCI and/or diagnostic cable may expose to the risk of hindrance to driving, and in particular to the activation of safety devices.

Position the VCI and the diagnostic cable so that they do not compromise driving or the proper operation of safety devices.

Make sure the electric cables, the wiring in general, the fuel hydraulic pipes and the safety pneumatic devices of the vehicle are not damaged during the installation.

8. Fasten the VCI and the diagnostic cable properly.

WARNING

Improperly fastening the VCI and diagnostic cable may cause the VCI itself or the diagnostic cable to fall, which may be a hindrance to vehicle driving and to the proper operation of safety devices.

Secure the VCI and the diagnostic cable so as to minimise their risk of falling.

II.CONFIGURATION

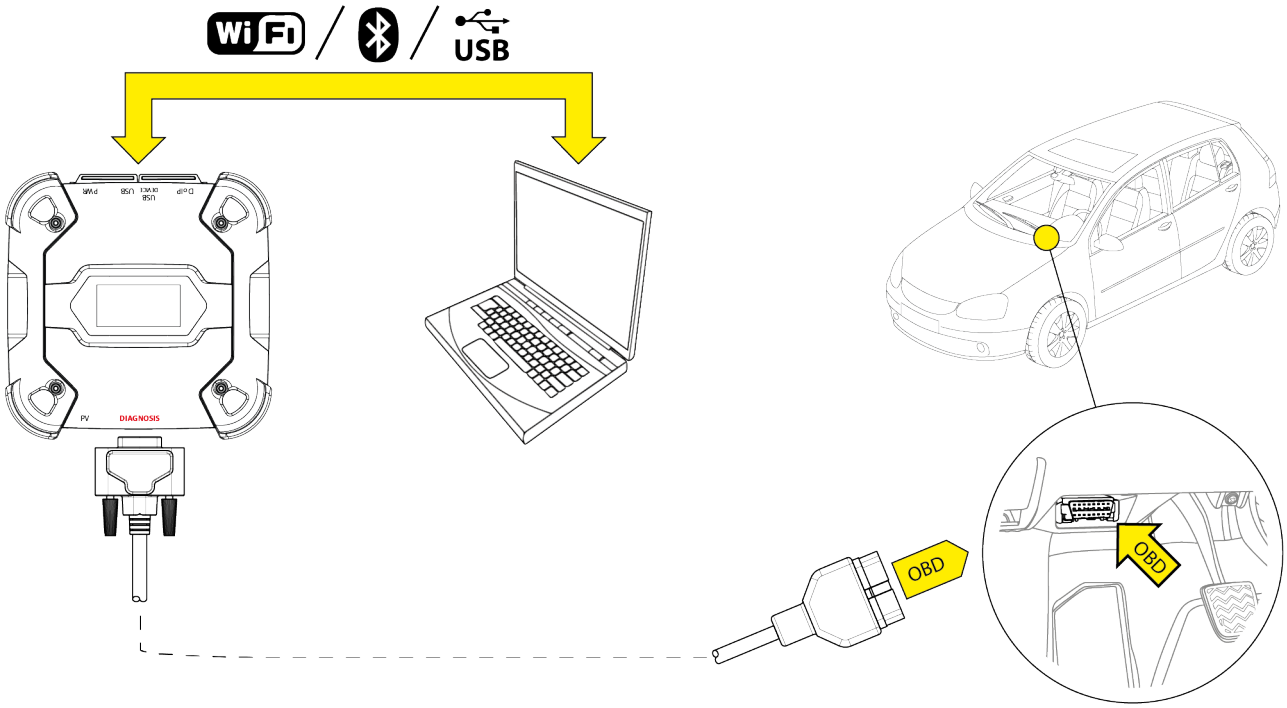

9. Turn on the vehicle (instrument panel on).
10. Start the diagnostic software.
11. Connect the VCI to the display unit via Wi-Fi, Bluetooth or USB.
    (If previously configured, the wireless connection is automatic)

The VCI displays the following screen.

12. Select the vehicle on which you wish to operate.
13. Select the control unit you wish to monitor.
14. Start the diagnosis.
15. Create or select a group of favourite parameters that you wish to record.
16. Press the dynamic tests icon.

The software provides the sequence of operations required to complete the procedure in order to configure the VCI.

The VCI displays the following screen during the configuration phase.

17. Follow the information that appear on screen.
18. Close the diagnostic software.
19. If connected via USB, disconnect the VCI from the display unit.

The VCI displays the following screen.

INFORMATION

The VCI starts recording only after the diagnostic software has been closed or after being turned off and back on.

The actual time required for the recording to start is proportional to the number of selected parameters.

The recording mode must remain active for at least one minute in order for the VCI to store valid diagnostic data.

III.DYNAMIC TESTS

While carrying out the dynamic tests, simply drive as usual.

You do not have to take the display unit with you.

INFORMATION

During the dynamic tests, the only vehicle occupants must be authorised repair technicians.

The sampling of the parameters generally takes place every second.

Any errors that may occur during the tests are stored within the memory of the VCI.

⚠ WARNING

Careless driving may expose to the risk of accidents, which may result in injuries, even serious.

Stay focused on driving.

Do not get distracted by checking the VCI.

Do not operate theVCIin any way.

IV.ANALYSIS OF THE COLLECTED DATA

The analysis of the collected data is performed by the specific software.

In order to analyse the results of the dynamic tests, you must connect the VCI to the display unit and download the recorded data.

The software allows you to view specific reports for the data stored.

20. Keep the VCI connected to the OBD socket.
21. Connect the VCI to the display unit via Wi-Fi, Bluetooth or USB.
    (If previously configured, the wireless connection is automatic)
22. Start the diagnostic software.

For further information, see the software operating manual.

INFORMATION

The analysis of the collected data can be carried out at a later time, also powering the VCI in a different way from the one described. However, we recommend carrying out these operations as described so far.

14.5 *Disconnection at the End of a Diagnosis*

Once the diagnostic operations are complete, disconnect the VCI and restore the initial vehicle conditions.

Proceed as follows:

1. *Close the diagnostic software.*
2. *Turn off the vehicle (instrument panel off).*
3. *Disconnect the diagnostic cable from the vehicle's diagnostic connector.*
4. *Disconnect the diagnostic cable from the* **DIAGNOSIS** *connector on the VCI.*
5. *Reposition any panels protecting the OBD connector.*

⚠ WARNING

The unexpected unfastening of any panels protecting the OBD connector may expose to the risk of hindrance to driving, and in particular to the activation of safety devices.

Make sure any panels protecting the OBD connector that were previously removed and then reinstalled are secured in place, so that they do not fall off while driving.

15 FIRMWARE UPDATE

The firmware in the VCI is updated through a specific software function and requires the connection to the display unit.

Connection to the display unit may be established via:

- *WiFi*
- *USB*

INFORMATION

The available connection modes depend on the display unit used; however, the Bluetooth connection cannot be used to update the firmware.

INFORMATION

Regardless of the communication mode, during the update:

- *do not turn off the VCI;*
- *do not turn off the display unit;*
- *do not interrupt the connection between the VCI and the display unit.*

The procedure is the same for all connection modes.

Proceed as follows:

1. *Power the VCI.*
2. *Turn on the display unit.*
3. *Start the diagnostic software.*
4. *Start the VCI firmware update.*
5. *Follow on screen instructions.*

The VCI displays the progress status of the firmware update procedure:

Wait for the update procedure to complete.

For further information, see the software operating manual.

16 MAINTENANCE

This product does not require special maintenance. However, we recommend the following:

- *carefully follow the instructions provided in this manual;*
- *keep the product clean;*
- *periodically inspect the electrical connections making sure they are in good conditions;*
- *immediately replace any damaged cables;*
- *only use original spare parts or spare parts approved by the manufacturer;*
- *contact your retailer for extraordinary maintenance operations;*

INFORMATION

For further help, contact your retailer or the technical assistance service.

*You can see the list of authorised retailers at the following address:***https://www.texa.com/sales-network**

17 TROUBLESHOOTING

For any technical problem contact your retailer/distributor.

Below you will find a list of simple instructions that the customer can carry out without having to ask for technical assistance.

PROBLEM	POSSIBLE CAUSE	POSSIBLE SOLUTION
The VCI does not turn on.	The diagnostic cable is not properly connected.	Connect the cable properly.
	The diagnostic cable is damaged.	Replace the cable.
	The **DIAGNOSIS** connector is damaged.	Contact Technical Assistance.
	The power cable is not properly connected to the **PWR** connector.	Connect the cable properly.
	The OBD socket is not powered when the vehicle is off.	Turn on the vehicle.
		Use one of the other power supply methods indicated in the manual.
	The cigar lighter socket is not powered when the vehicle is off.	Use one of the other power supply methods indicated in the manual.
The VCI does not communicate with the control unit.	The diagnostic cable is not properly connected.	Connect the cable properly.
	The adapter being used is not correct.	Use the correct adapter.
	The diagnostic cable is damaged.	Replace the cable.
	The **DIAGNOSIS** connector is damaged.	Contact Technical Assistance.
	The vehicle is off.	Turn on the vehicle.
	You are trying to use a communication mode that is not suitable for the type of diagnosis.	Use the connection indicated for the type of diagnosis you wish to carry out.

PROBLEM	POSSIBLE CAUSE	POSSIBLE SOLUTION
The VCI does not communicate with the display unit.	The display unit is off.	Turn on the display unit.
	The communication configuration procedure has not been carried out.	Perform the communication configuration procedure.
	The VCI and the display unit are outside the Wi-Fi/Bluetooth signal range.	Move the VCI and the display unit closer.
	The VCI was placed near shielding materials.	Place the VCI away from shielding materials.
	Other wireless communications are disturbing the signal.	Move away from possible sources of interference.
		If possible, switch off the devices causing the interference.
		Wait and try to communicate again.
	The cable used for the connection is not properly connected to the VCI or the display unit.	Make sure the connectors are paired properly.
	The cable used for the connection is faulty.	Replace the cable.
	The USB cable is connected to the **USB** connector of the VCI.	Connect the cable to the **USB DEVICE** connector.
	You chose to manually select a communication mode that is not available at the moment.	Set the automatic selection of communication modes.
		Manually select one of the available communication modes.

PROBLEM	POSSIBLE CAUSE	POSSIBLE SOLUTION
The VCI does not communicate with the display unit.	The type of Wi-Fi network you wish to connect the VCI to is not among the supported ones.	Connect to a type of network among the supported ones. For further information see the COMMUNICATION chapter.
	The workshop's router is set to 5 GHz.	Set the router to 2.4 GHz.
It is impossible to complete the Bluetooth pairing procedure between the VCI and the display unit.	The display unit uses a Bluetooth 2.0 or lower.	Use a display unit with Bluetooth 2.1 or higher.

18 LEGAL NOTICES

TEXA S.p.A.

Via 1 Maggio, 9 - 31050 Monastier di Treviso - ITALY

Tax Code - Company Register of Treviso ID No. - VAT No.: 02413550266

Single-shareholder company subject to the direction and coordination activities of Opera Holding S.r.l.

Paid-up share capital 1,000,000 € - R.E.A. (Economic Administrative Index) No. 208102

Legal Representative Bruno Vianello

Phone +39 0422.791.311

Fax +39 0422.791.300

www.texa.com

For information regarding the legal notices, please refer to the **International Warranty Booklet** provided with the product.